35.Rear Accessory Power Supply System

A: WIRING DIAGRAM

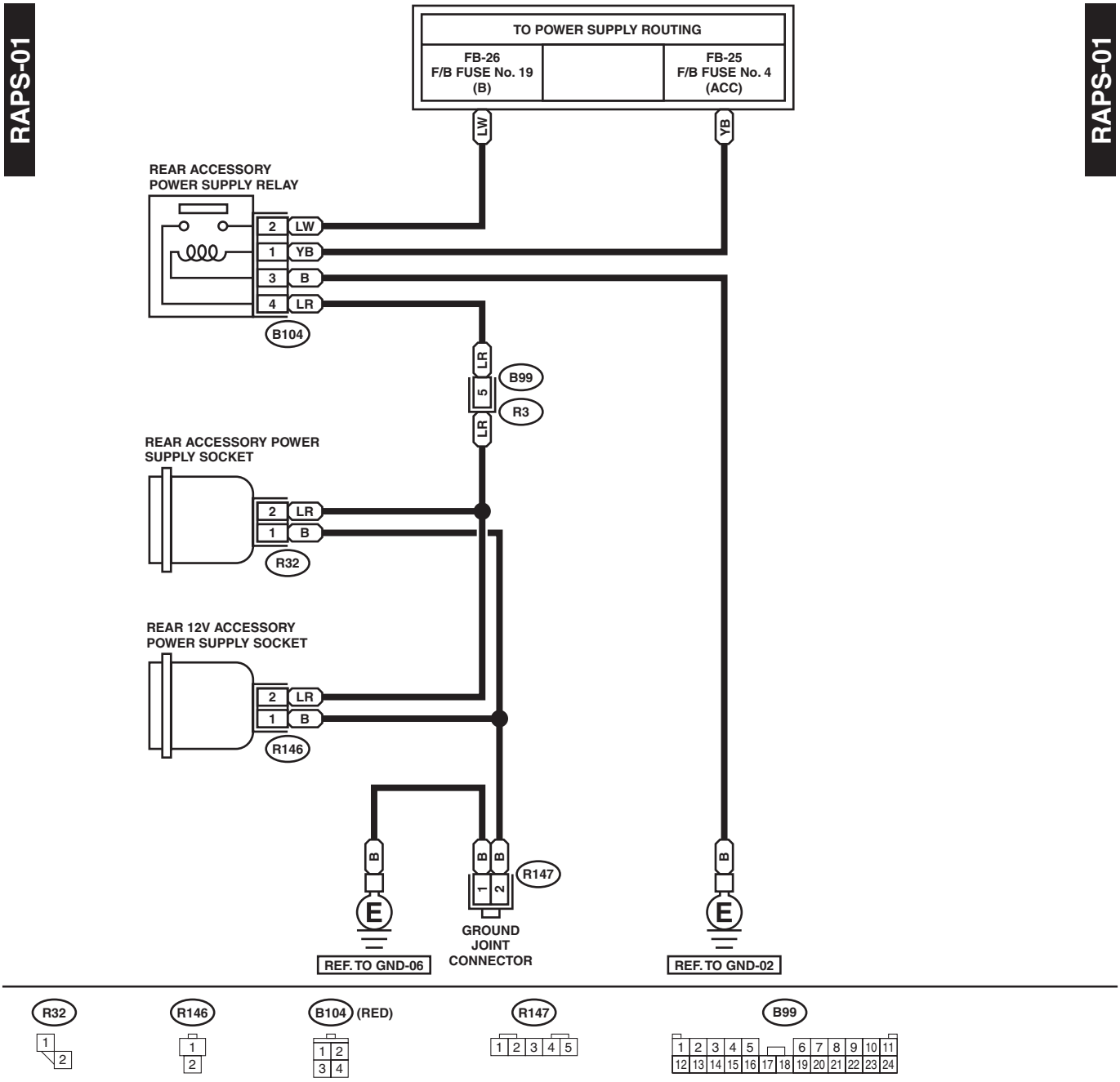

WI-03083