2016 DUCATI MONSTER 1200 R(E4) Service Manual

- M(E4).01 - General
- How to consult the manual
  - Layout of the manual
- Symbols - Abbreviations - References
  - Product specifications
- Dangerous products - warnings
  - General maintenance instructions
  - General safety rules

- M(E4).02 - Model-specific information
- Model identification
  - Identification data

- M(E4).03 - Technical data
- Technical specifications
  - Lights/instrument panel
  - Injection system
  - Fuel system
  - Injection-ignition system
  - Charging system/generator
  - Hydraulic brakes
  - Rear suspension
  - Rear wheel
  - Front suspension
  - Front wheel
  - Cooling system
  - Gearbox
  - Cylinder/piston
  - Crankshaft
  - Timing system/valves
  - Transmission
  - Colours
  - General
- Dimensions
  - Dimensions
- Fuel, lubricants and other fluids
  - Fuel, lubricants and other fluids
- Tightening torque settings
  - Engine tightening torque values
  - Frame tightening torque values
- Service tools
  - Diagnosis special tools
  - Frame special tools
  - Engine special tools

- M(E4).04 - Maintenance operations
- Vehicle pre-delivery
  - Vehicle pre-delivery
- Scheduled maintenance chart
  - Operations to be carried out by the customer
  - Operations to be carried out by the dealer

Maintenance operations
  - Check rear brake disc and phonic wheel screw tightening (with rear wheel shaft removal)
  - Adjusting the steering damper
  - Adjusting the rear shock absorber
  - Adjusting the front fork
  - Adjusting the position of the gearchange pedal and rear brake pedal
  - Adjusting the clutch lever and front brake lever
  - Checking rear brake pad wear and replacing brake pads
  - Checking front brake pad wear and replacing brake pads
  - Adjusting the chain tension
  - Adjusting the steering head bearing play
  - Filling the clutch hydraulic circuit
  - Draining the clutch hydraulic circuit
  - Changing the clutch fluid
  - Changing the fluid in the rear brake system
  - Changing the fluid in the front brake system
  - Change coolant
  - Checking coolant level
  - Changing and cleaning the air filters
  - Change spark plugs
  - Change timing belts
  - Checking valve clearance
  - Changing the engine oil and filter cartridge
  - Check engine oil level

- M(E4).05 - Fairings
- Rear-view mirrors
  - Refitting the rear-view mirrors
  - Removing the rear-view mirrors
- Headlight fairing
  - Refitting the headlight fairing
  - Removing the headlight fairing
- Instrument panel assembly
  - Refitting the instrument panel assembly
  - Removing the instrument panel assembly
- Seat
  - Refitting the seat bottom cover
  - Removing the seat bottom cover
  - Refitting the seat release mechanism
  - Removing the seat release mechanism
  - Refitting the seat
  - Removing the seat
- Front and rear mudguard
  - Refitting the rear mudguard
  - Removing the rear mudguard
  - Refitting the front mudguard
  - Removing the front mudguard

- M(E4).06 - Electric system and engine management
- Wiring diagram
  - Branch 11
  - Branch 10
  - Branch 9
  - Branch 8
  - Branch 7
  - Branch 6
  - Branch 5
  - Branch 4

    - Branch 3
    - Branch 2
    - Branch 1
    - Routing of wiring on frame
    - Key to wiring diagram
    - Technological Dictionary
    - Acronyms and abbreviations used in the manual
- Charge system - Battery
    - Rectifier-regulator
    - Alternator / Generator
    - Refitting the battery
    - Removing the battery
    - Topping up the electrolyte
    - Recharging the battery
    - Checking the battery charging system
- Electric starter
    - Solenoid starter
    - Starter motor
    - Electric starting system
- Lighting
    - Replacing the tail light bulbs
    - Tail light
    - Aligning the headlight
    - Replacing the headlight bulbs
    - Headlight
- Indicators
    - Checking the indicators and lights
- Handlebar controls: controls
    - Right-hand switch
    - Left-hand switch
- Safety and protection sensors: controls
    - Horn
    - Checking the fuses
    - Side stand switch
    - Air temperature sensor
    - Engine temperature sensor
    - Clutch switch
    - Oil pressure sensor
    - Gear/neutral sensor
    - Rear stop switch
    - Front stop switch
- Electrical components: checks
    - Exhaust valve motor
    - Solenoid valves
    - Coils
- Electronic components: checks
    - VIN code
    - Anti-lock Braking System (ABS)
    - Accelerator position system (APS)
    - CAN line
    - Ducati traction control (DTC)
    - Electronic throttle valve (ETV)
    - Black Box System (BBS)
    - Map Sensor
    - Timing/rpm sensor
    - Throttle position potentiometer
    - Oxygen sensor
    - Electronic control unit

- Instrument panel
  - Main functions
  - Restoring motorcycle operation via the PIN CODE
  - Displayed errors description
  - Error warnings
  - Warnings/Alarms (WARNING)
  - Parameter setting/displaying
  - Instrument panel

- M(E4).07 - Chassis
- Front wheel
  - Refitting the front wheel
  - Overhauling the front wheel
  - Removing the front wheel
- Rear wheel
  - Refitting the rear wheel
  - Overhauling the rear wheel
  - Removing the rear wheel
- Front brake control
  - Refitting the front brake system
  - Refitting the brake discs
  - Overhauling the front brake components
  - Removing the brake discs
  - Removing the front brake system
  - Maintenance operations
  - Refitting the front brake master cylinder
  - Removing the front brake master cylinder
- Rear brake
  - Refitting the rear brake calliper
  - Removing the rear brake disc
  - Removing the rear brake calliper
  - Refitting the rear brake control
  - Disassembling the rear brake control
  - Removing the rear brake control
- ABS system information
  - ABS system deactivation
  - ABS system operation information
  - Operating principle
- ABS system components
  - Routing wiring harnesses/hoses
  - Refitting the ABS control unit
  - Removing the ABS control unit
  - Changing the rear phonic wheel sensor
  - Changing the front phonic wheel sensor
- ABS component maintenance
  - Bleeding of the ABS hydraulic system
  - Adjusting the AIR-GAP of phonic wheel sensor
- Handlebar assembly: throttle control
  - Refitting the throttle control
  - Removing the throttle control
  - Refitting the handlebar
  - Removing the handlebar
- Handlebar assembly: hydraulic clutch control
  - Refitting the clutch slave cylinder
  - Removing the clutch slave cylinder
  - Refitting the clutch master cylinder assembly
  - Removing the clutch master cylinder assembly
- Ignition switch

    - Refitting the ignition switch
    - Removing the ignition switch
- Gear selector control
    - Refitting the gear change control
    - Disassembling the gear change control
    - Removing the gear change control
- Fork - steering head: front fork
    - Refitting the front fork
    - Overhauling the front fork
    - Removing the front fork
- Fork - steering head: steering assembly
    - Refitting the steering tube components
    - Removing the steering tube components
    - Steering angle adjustment
    - Adjusting the steering head bearing clearance
- Steering damper
    - Refitting the steering damper
    - Removing the steering damper
- Rear shock absorber assembly
    - Refitting the rear suspension
    - Overhauling the rear shock absorber
    - Removing the rear shock absorber
    - Rear suspension system
- Swinging arm
    - Refitting the rear swinging arm
    - Inspecting the swinging arm shaft
    - Removing the swinging arm
    - Refitting the rear wheel eccentric hub and rear wheel shaft
    - Removing the rear wheel eccentric hub and the rear wheel shaft
- Final drive
    - Lubricating the chain
    - Washing the chain
    - Refitting the rear sprocket
    - Replacing the rear sprocket
    - Refitting the front sprocket
    - Removing the front sprocket
    - Inspection of the final drive
- Footrest support
    - Refitting the footpeg holder plate
    - Removing the footpeg holder plate
    - Refitting the footpegs
    - Removing the footpegs
- Stands
    - Refitting the side stand
    - Removing the side stand
- Inspecting the frame
    - Refitting the light assembly
    - Refitting the rear subframe
    - Refitting the structural parts and frame
    - Checking the frame
    - Removing the rear subframe
    - Removing the light assembly
    - Removing structural components and frame
- Tail light - number plate holder
    - Refitting the tail light
    - Removing the tail light
    - Refitting the number plate holder
    - Removing the number plate holder

- Electrical components compartment
  - Refitting the electric components compartment
  - Removing the electric components compartment

- M(E4).08 - Fuel/Exhaust system
- Fuel tank
  - Refitting the fuel tank
  - Refitting the fuel tank flange
  - Removing the fuel tank flange
  - Refitting the tank filler plug
  - Removing the tank filler plug
  - Removing the fuel tank
- Airbox ?V throttle body
  - Refitting the airbox and throttle body
  - Removing the airbox and throttle body
- Air intake
  - Refitting the secondary air system
  - Removing the secondary air system
  - Refitting the air filters
  - Removing the air filters
- Exhaust system
  - Refitting the silencer
  - Refitting the exhaust system
  - Removing the exhaust system
  - Removing the silencer
- Canister filter
  - Refitting the Canister filter
  - Removing the canister filter
  - Canister filter system

- M(E4).09 - Engine
- Engine
  - Refitting the engine
  - Removing the engine
- Lubrication system: oil pump
  - Refitting the oil pump
  - Reassembling the oil pump
  - Disassembling the oil pump gear
  - Removing the oil pump
- Lubrication system: oil cooler
  - Refitting the lubrication system
  - Inspecting the oil cooler
  - Removing the lubrication system
- Cooling system: water tank
  - Refitting the water tank
  - Removing the water tank
- Cooling system: water radiator
  - Refitting the cooling system hoses and unions
  - Removing the cooling system hoses and unions
  - Fitting the radiator
  - Replacing the electric fan
  - Removing the radiator
- Cooling system: water pump
  - Refitting the water pump
  - Removing the water pump
- Cylinder head assembly: checks and adjustments
  - Checking the engine timing
  - Checking valve lift

    - Checking and adjusting the valve clearance
- Cylinder head assembly: timing system
    - Refitting the timing outer covers
    - Refitting the timing belts
    - Refitting the cylinder heads pulleys/idler pulleys
    - Reassembling the timing pulleys
    - Refitting the tensioner pins
    - Refitting the timing layshaft pulley
    - Removing the timing layshaft pulleys
    - Disassembling the camshaft pulleys
    - Removing the tensioner pins
    - Removing the cylinder head pulley/fixed tensioner
    - Removing the mobile tensioner/timing belt
    - Removing the timing belt covers
- Cylinder head assembly: camshafts
    - Refitting the intake manifold and water union
    - Removing the intake manifold and water union
    - Refitting the camshafts
    - Check of the camshafts and supports
    - Removing the camshafts
- Cylinder head assembly: valves - rocker arms
    - Refitting the cylinder head assemblies
    - Reassembling the cylinder head
    - Overhauling the cylinder head components
    - Removing the valve rocker arms
    - Removing the valves
    - Removing the cylinder heads
- Cylinder/piston assembly
    - Refitting the cylinder/piston assembly
    - Overhauling the cylinder/piston components
    - Removing the cylinder/piston assembly
- Clutch assembly: clutch
    - Refitting the clutch
    - Checking and overhauling the components
    - Removing the clutch
    - Description of the clutch assembly
- Clutch assembly: clutch cover
    - Refitting the clutch cover
    - Reassembling the clutch cover
    - Disassembling the clutch cover
    - Removing the clutch cover
- Clutch assembly: primary drive gears
    - Refitting the primary drive gears and checking backlash
    - Removing the primary drive gears
- Gearbox assembly: linkages
    - Refitting the gearchange mechanism
    - Refitting the gear interlock plunger and ratchet
    - Disassembling gear interlock plunger and ratchet
    - Removing the gearchange mechanism
- Gearbox assembly: gearbox shafts
    - Reassembling the gearbox assembly
    - Reassembling the gearbox shafts
    - Inspecting the fork selector drum
    - Inspecting the gear selector forks
    - Overhauling the gearbox
    - Disassembling the gearbox shafts
    - Removing the gearbox assembly
- Flywheel - generator

    - Fitting the generator cover
    - Fitting the flywheel/generator assembly
    - Overhauling the flywheel/generator assembly
    - Removing the flywheel/generator assembly
    - Disassembling the generator cover
    - Removing the generator cover
- Crankcase: external components
    - Refitting the starter motor
    - Removing the starter motor
    - Refitting the starter motor gear
    - Removing the starter motor idler gear
    - Refitting the timing gears
    - Removing the timing gears
    - Refitting the external components
    - Removing outer components
- Crankcase: casings
    - Closing the crankcase
    - Shimming the shafts
    - Reassembling the crankcase halves
    - Main bearings
    - Overhauling the crankcase halves
    - Separating the crankcase halves
- Crankcase: connecting rod assembly
    - Refitting the connecting rod assembly
    - Reassembling the connecting rod assembly
    - Disassembling the connecting rod assembly
    - Removing the connecting rod assembly

How to consult the manual

To consult a workshop manual select a specific family and Model Year.
When the mouse pointer passes over the "Workshop Manual" key, a menu drops down with the list of the available versions.

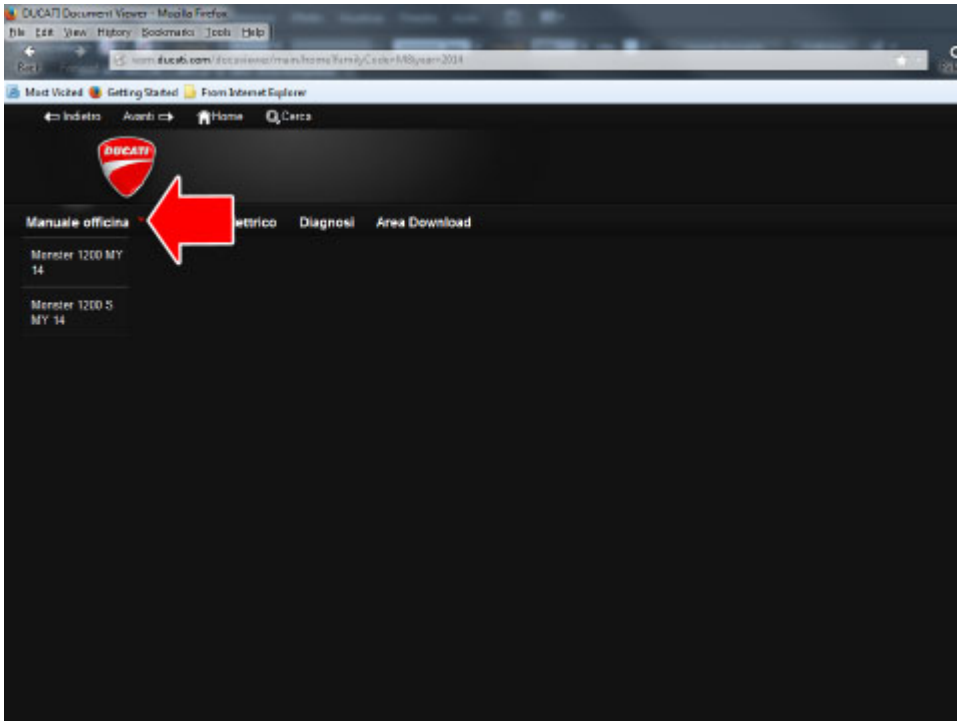

Move the pointer on the desired version and click on it.

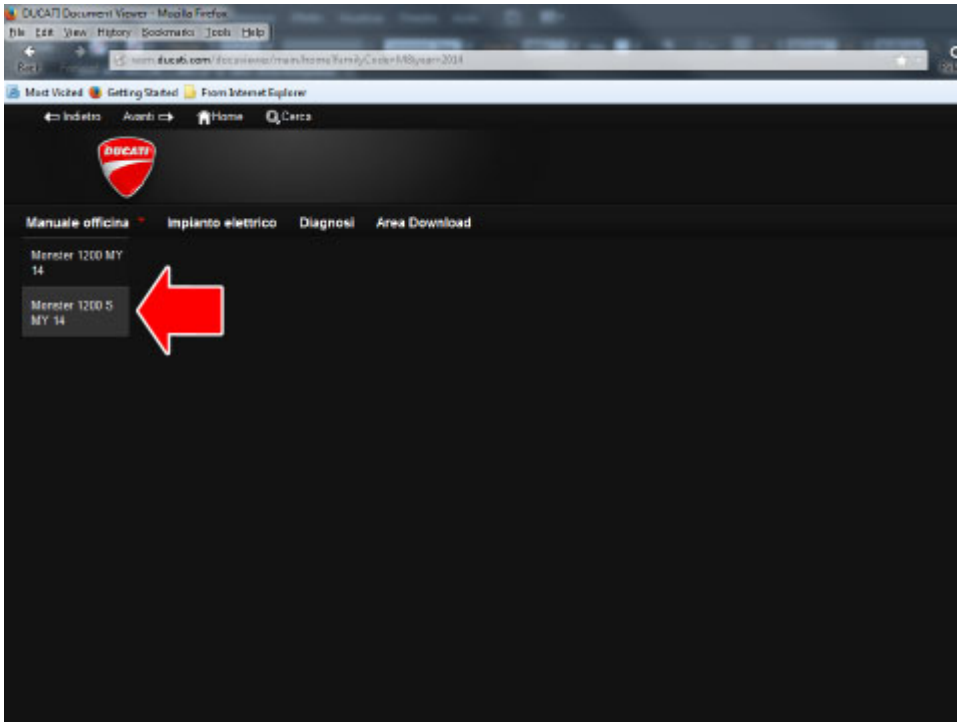

The display will show on the left side the context-sensitive menu of the workshop manual sections and above them the selected model.
To consult the instructions of a procedure in the workshop manual scroll with the mouse to the right side (without clicking) and select the items of the desired chapter and procedure. After clicking the display will show only the sections belonging to the previously selected chapter and above it the subject paths.

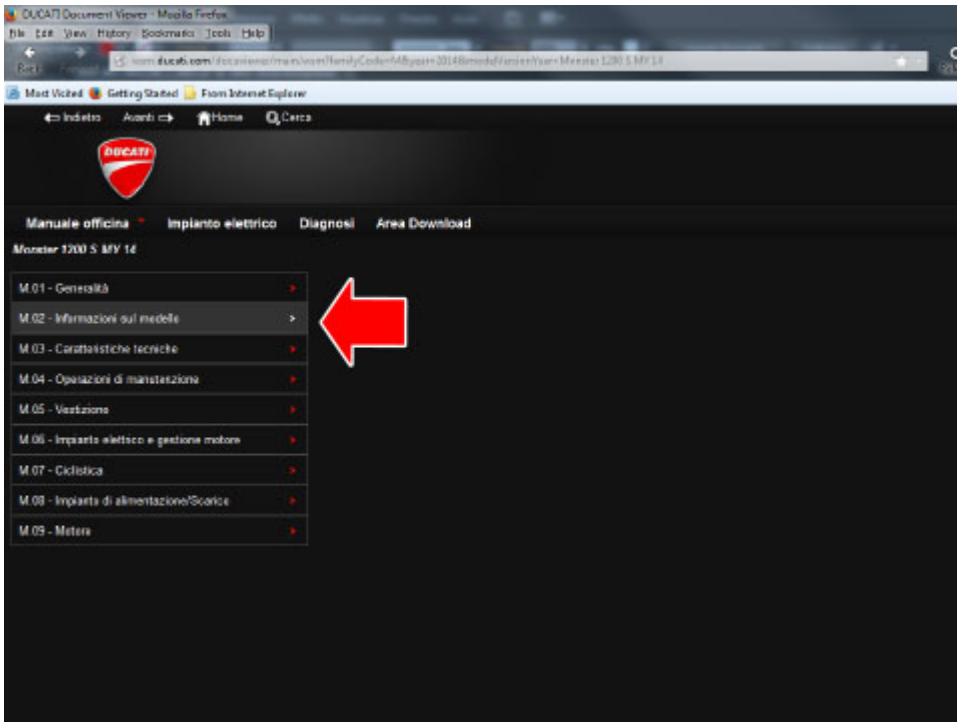

Click on the desired procedure to open it.

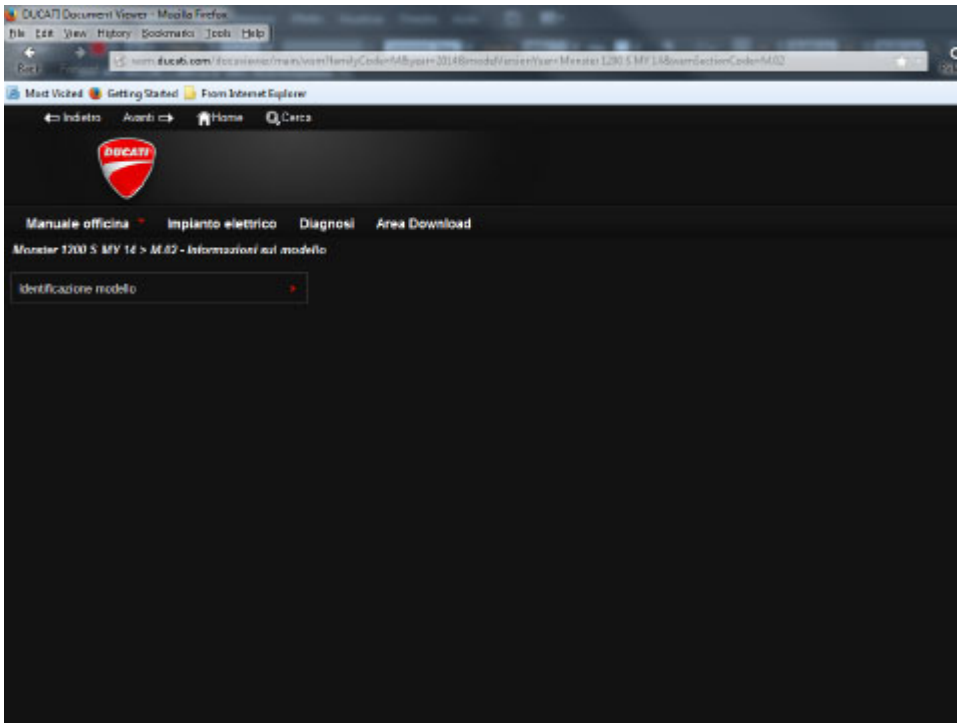

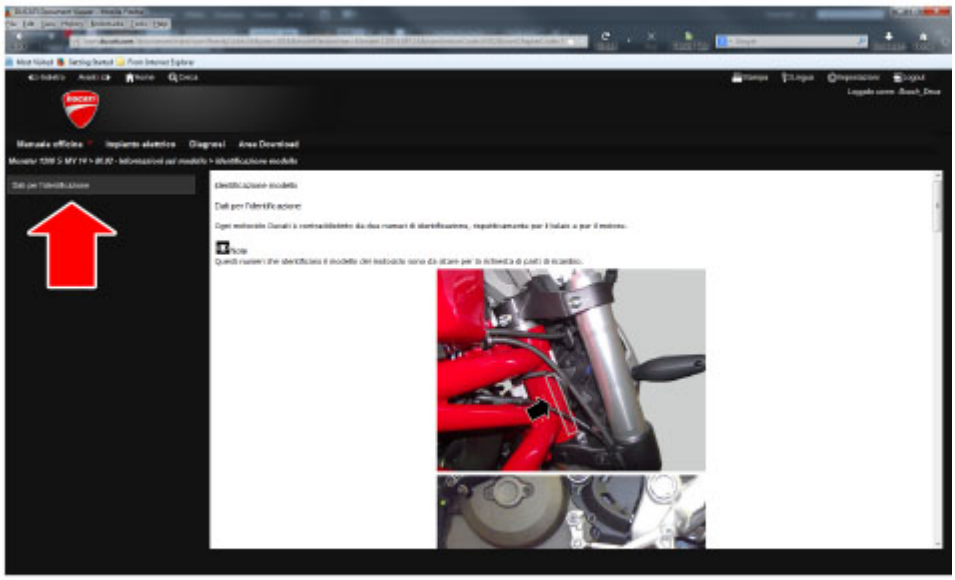

To change chapter or argument select the level you wish to access in the displayed path. The selected level will be highlighted in red.
Click to go back to the procedure list.

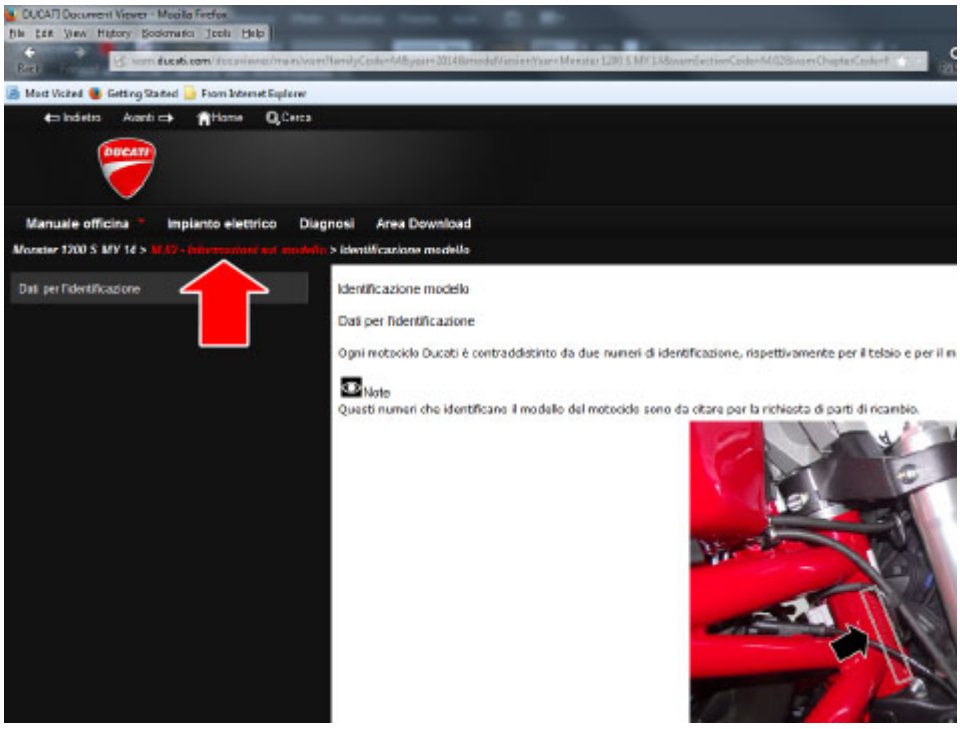

Inside each procedure there may be cross-links to other procedures. Click on the desired link to access the relevant procedure.

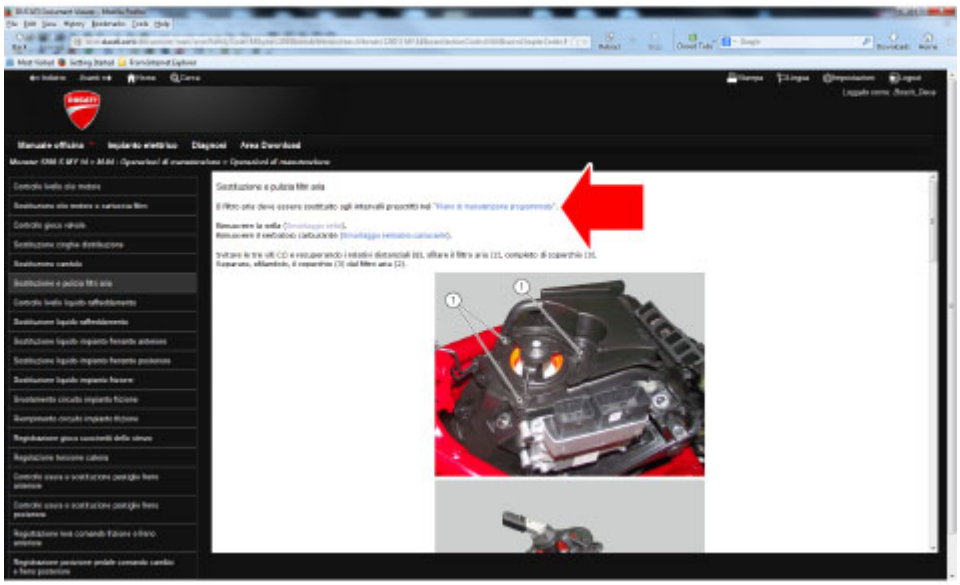

Symbols - Abbreviations - References

To allow quick and easy consultation, this manual uses graphic symbols to highlight situations in which maximum care is required, as well as practical advice or information.
Pay attention to the meaning of the symbols since they serve to avoid repeating technical concepts or safety warnings throughout the text. The symbols should therefore be seen as real "reminders".
Please refer to this page whenever in doubt as to their meaning.

The terms right-hand and left-hand refer to the motorcycle viewed from the riding position.


Warning
Failure to comply with these instructions may put you at risk, and could lead to severe injury or even death.


Important
Failure to follow the instructions in text marked with this symbol can lead to serious damage to the motorcycle and its components.


Note
This symbol indicates additional useful information for the current operation.


Smaltimento
This symbol supplies information on the disposal of a substance/material.

Product specifications

Symbols in the diagram show the type of threadlocker, sealant or lubricant to be used at the points indicated. The table below shows the symbols used and the specifications of the various products.

Symbol		Specifications	Recommended product
LOCTITE			
	LOCK 1	Low-strength threadlocker.	Loctite 222
	LOCK 2	Medium-strength threadlocker, compatible with oil.	Loctite 243 (or THREE BOND TB1324)
	LOCK 3	High-strength threadlocker for threaded parts.	Loctite 270
	LOCK 4	Surface sealant resistant to high mechanical stress and solvents. Resists high temperatures (up to 200 °C) and pressures up to 350 bar; fills gaps up to 0.4 mm.	Loctite 510
	LOCK 5	Permanent adhesive for free sliding cylindrical couplings or threaded couplings on mechanical parts, coaxial parts. High resistance to mechanical stress and solvents. Temperature range: 55 to 175 °C.	Loctite 648 Loctite 128455 (ex. 648 BV)
	LOCK 6	Pipe sealant for pipes and medium to large fittings. For water and gases	Loctite 577

		(except oxygen). Maximum filling capacity: 0.40 mm (diameter clearance).	
	LOCK 7	Instant adhesive for rubber and plastics with elastomer charged ethylic base.	Loctite 480
	LOCK 8	High-strength retaining compound for threaded parts, bearings, bushes, splines and keys. Operating temperature range: 55 to 150 °C.	Loctite 601 (As an alternative THREE BOND TB1378B)
	LOCK 9	Medium-strength threadlocker.	Loctite 406
	LOCK 10	Product for metal parts to seal and lock freely sliding cylindrical couplings or threaded couplings. Resistant to high mechanical stress and high temperature, excellent resistance to solvents and chemical attack.	Loctite 128443 (former 648 AV)
	LOCK 11	Medium-strength threadlocker.	Loctite 401
	LOCK 12	Instant adhesive gel offering tensile/shear strength.	Loctite 454 gel
OTHER SEALING AGENTS			
		DUCATI sealing compound.	THREE BOND 1215
		Sealing compound	THREE BOND 1207B
		One-component sealing compound	SIKAFLEX 221
		Exhaust pipe sealing paste. Self-sealing paste hardens when heated and resists temperatures exceeding 1000 °C.	Holts Firegum
		Sealing compound.	BOSTIK clear universal silicone
		Sealing compound.	Ser Sil Silver
VEHICLE/ENGINE GREASE			

	GREASE A	Multipurpose, medium fibre, lithium grease.	SHELL Alvania R3
	GREASE B	Molybdenum disulphide grease, high mechanical stress and high temperature resistant.	SHELL Retinax HDX2 or SHELL Gadius S2 V220 AD 2
	GREASE C	Bearing/joint grease for parts subject to prolonged mechanical stress. Temperature range: -10 to 110 °C.	SHELL Retinax LX2
	GREASE D	Protective grease, with anti-corrosive and waterproofing properties.	SHELL Retinax HD2
	GREASE E	Grease	PANKL - PLB 05
	GREASE F	Grease	(Vehicle): OPTIMOL - PASTE WHITE T (Engine): PANKL — PLB03
	GREASE G	Grease	PANKL - PLB07
	GREASE H	Grease	KLÜBER STABURAGS NBU 30 PTM
	GREASE I	Copper grease	CUPRUM 320
	GREASE L	Grease	FLUOROCARBON GEL 880
	GREASE M	Grease	ROCOL — DRY MOLY PASTE
	GREASE N	Grease	AKRAPOVIC — CERAMIC ANTI SEIZE PASTE
PROTECTANTS			
		Spray used to protect electric systems. Eliminates moisture and condensation and provides excellent corrosion resistance. Water repellent.	SHELL Advance Contact Cleaner
		Spray used to protect electric systems. Eliminates moisture and condensation and provides excellent corrosion resistance. Water repellent.	SHELL Advance Contact Cleaner
		Spray used to protect electric systems. Eliminates moisture and condensation and provides excellent corrosion resistance. Water repellent.	Arexons TL246

			
		Spray used to protect electric systems. Eliminates moisture and condensation and provides excellent corrosion resistance. Water repellent.	Nyogel 760G
LUBRICANT FOR RUBBER PARTS			
		Emulsion for lubrication of rubber.	P 80
		Concentrated lubricant for tyre installation.	Michelin
		Denatured alcohol.	Denatured alcohol
		Protection lubricant emulsion.	KLUBERPLUS S 06/100
THERMAL COMPOUND			
		Thermal compound.	HTC Electrolube
LUBRICANTS FOR MECHANICAL ELEMENTS			
		Engine oil (for characteristics see Fuel, lubricants and other fluids).	SHELL Advance 4T Ultra
		SAE 80-90 gear oil or special products for chains with O rings.	SHELL Advance Chain or Advance Teflon Chain
		Dry lubricant, polymerising on contact with air.	Molykote D321R Molykote M55 Plus
		Lubricant for mechanical elements.	Rothen extra - Additive
		Lubricant for mechanical elements.	Castor oil
DEGREASERS			
		All-purpose degreaser and cleaner.	Arexons Fulcron
		Degreaser for Pankl connecting rods (if any).	Meta Clean 366
		Degreasing agent.	Lochim Solfast

			
		Degreasing agent.	Deta Blu
		Degreasing agent.	Saga Special
OTHER PRODUCTS			
		DOT4 special hydraulic brake fluid.	SHELL Advance Brake DOT4
		Anti-freeze (nitride, amine and phosphate free) 30 to 40% + water.	SHELL Advance coolant or Glycoshell

Acronyms and abbreviations used in the manual

ABS
Antilock Braking System
BBS
Black Box System
CAN
Controller Area Network
DDA
DUCATI Data Acquisition
DSS
DUCATI Skyhook Suspension
DSB
Dashboard
DTC
DUCATI Traction Control
HF
Hands Free
ECU
Engine Control Unit

Technological Dictionary

Technological Dictionary

Riding Mode
The rider can choose from three different preset bike configurations (Riding Modes) and pick the one that best suits his/her riding style or ground conditions. The Riding Modes allow the user to instantly change the engine power delivery (ENGINE), the ABS settings, the DTC settings.
Available Riding Modes: Sport, Touring and Urban.
Within every Riding Mode, the rider can customise any settings.

Ducati Traction Control (DTC)
The Ducati Traction Control system (DTC) supervises the rear wheel slipping control and settings vary through eight different levels that are programmed to offer a different tolerance level to rear wheel slipping. Each Riding Mode features a pre-set intervention level. Level eight indicates system intervention whenever a slight slipping is detected, while level one is for very expert riders because it is less sensitive to slipping and intervention is hence softer.

Anti-lock Braking System (ABS)
The ABS system fitted on this vehicle is a system that actuates combined braking with anti lift-up function for the rear wheel so as to guarantee not only a reduced stopping distance, but also a higher stability under braking. The ABS features 3 levels, one associated to each Riding Mode.

General maintenance instructions

Useful tips

Ducati recommends you to follow the instructions below in order to prevent problems and obtain the best result:

- when diagnosing faults, primary consideration should always be given to what the customer reports about motorcycle operation since this information can highlight faults; your questions to the customer concerning symptoms of the fault should be aimed at clarifying the problem;
- diagnose the problem systematically and accurately before proceeding further. This manual provides the theoretical background for troubleshooting; this basis must be combined with personal experience and attendance at periodic training courses held by Ducati;
- repair work should be planned carefully in advance to prevent any unnecessary downtime, for example obtaining the required spare parts or preparing the necessary tools, etc.;
- limit the number of operations needed to access the part to be repaired. Note that the disassembly procedures in this manual describe the most efficient way to reach the part to be repaired.

General advice on repair work

- Always use top quality tools. When lifting the motorcycle, only use devices that fully comply with the relevant European directives.
- When working on the motorcycle, always keep the tools within reach, ideally in the order required, and never put them on the motorcycle or in hard-to-reach or inaccessible places.
- The workplace must be kept clean and tidy at all times.
- Always replace gaskets, sealing rings and split pins with new parts.
- When loosening or tightening nuts or screws, always start with the largest or start from the centre; tighten nuts and screws to the specified torque working in a cross pattern.
- Always mark any parts and positions which might easily be confused upon reassembly.
- Use exclusively Ducati original spare parts and the recommended brands of lubricants.
- Use special tools where specified.
- Ducati Technical Bulletins often contain updated versions of the service procedures described in this manual. Check the latest Bulletins for details.

General safety rules

Carbon monoxide

When a maintenance operation must be performed with the engine running, make sure that the working area is well-ventilated. Never run the engine indoors.


Warning
Exhaust gases contain carbon monoxide, which is a poisonous gas that can cause unconsciousness or even death if inhaled.

Run the engine outdoors or, if working indoors, use an exhaust gas extraction system.

Fuel

Always make sure the working area is well ventilated. Keep any sources of ignition, such as cigarettes, open flames or sparks, well away from working area and fuel storage area.


Warning
Fuel is highly flammable and can explode under certain conditions. Keep away from children.

Hot parts


Warning
The engine and exhaust parts become hot when the motorcycle engine is running and will stay hot for some time after the engine has been stopped. Wear heat-resistant gloves before handling these components or allow the engine and exhaust system to cool down before proceeding.


Warning
The exhaust system might be hot, even after engine is switched OFF; pay particular attention not to touch exhaust system with any body part and do not park the motorcycle next to inflammable material (wood, leaves etc.).

Used engine oil


Warning
Wear suitable gloves to work with engine oil. Keep away from children.

Brake dust


Warning
Never clean the brake assembly using compressed air or a dry brush.

Brake fluid


Warning
Spilling brake fluid onto plastic, rubber or painted parts of the motorcycle may cause damages. Protect these parts with a clean shop cloth before proceeding to service the system. Keep away from children.

Coolant

Engine coolant contains ethylene glycol, which may ignite under particular conditions, producing invisible flames. Although the flames from burning ethylene glycol are not visible, they are still capable of causing severe burns.


Warning
Take care not to spill engine coolant on the exhaust system or engine parts. These parts may be hot and ignite the coolant, which will subsequently burn with invisible flames. Coolant (ethylene glycol) is irritant and poisonous when ingested. Keep away from children. Never remove the radiator cap when the engine is hot. The coolant is under pressure and will cause severe burns.

The cooling fan operates automatically: keep hands well clear and make sure your clothing does not snag on the fan.

Battery

 Warning

The battery gives off explosive gases; never cause sparks or allow naked flames and cigarettes near the battery. When charging the battery, ensure that the working area is properly ventilated.

Model identification

Identification data

Each Ducati motorcycle is identified by two numbers, one for the frame and one for the engine.

Note
Please quote these numbers, which identify the motorcycle model, when ordering spare parts.

DATA STAMPED ON THE FRAME

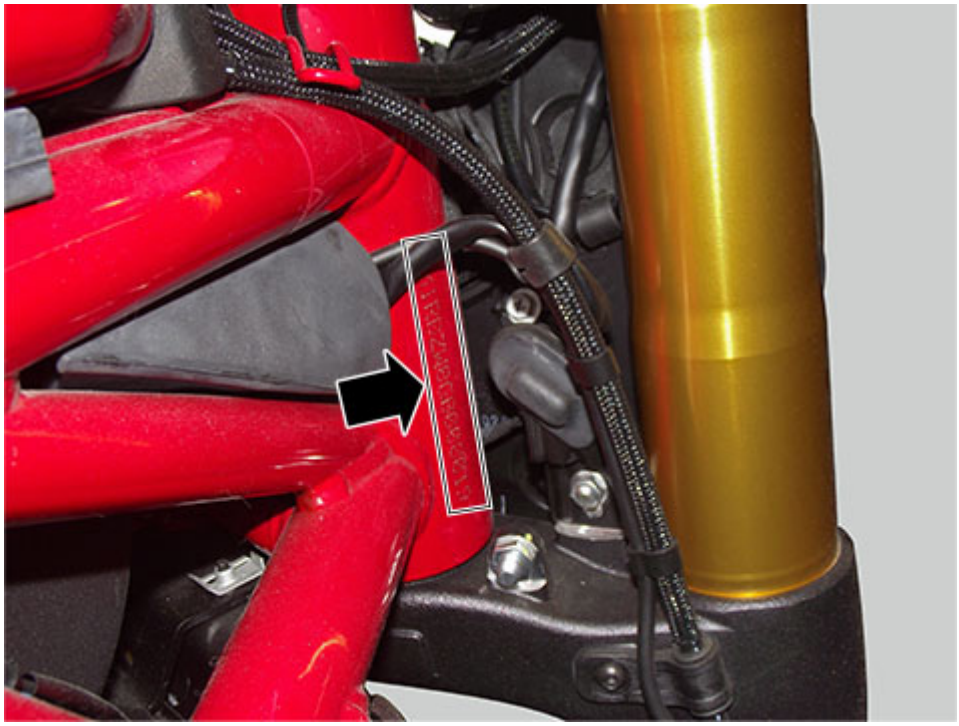

Examples:
ZDMMA00AA#B??????
ZDMMB00FA#B??????

Following is the table with the frame part numbers.

VERSION	**1**	**2**	**3**	**4**	**5**
EC, AUSTRALIA version frame	ZDM	MA00AA	#	B	??????
FRANCE, BELGIUM version frame	ZDM	MB00FA	#	B	??????

Key

1 Manufacturer: Ducati Motor Holding
2 Type - identical for all models
3 Model year: G for 2016 models
4 Manufacturing facility
5 Progressive serial no.

DATA STAMPED ON ENGINE

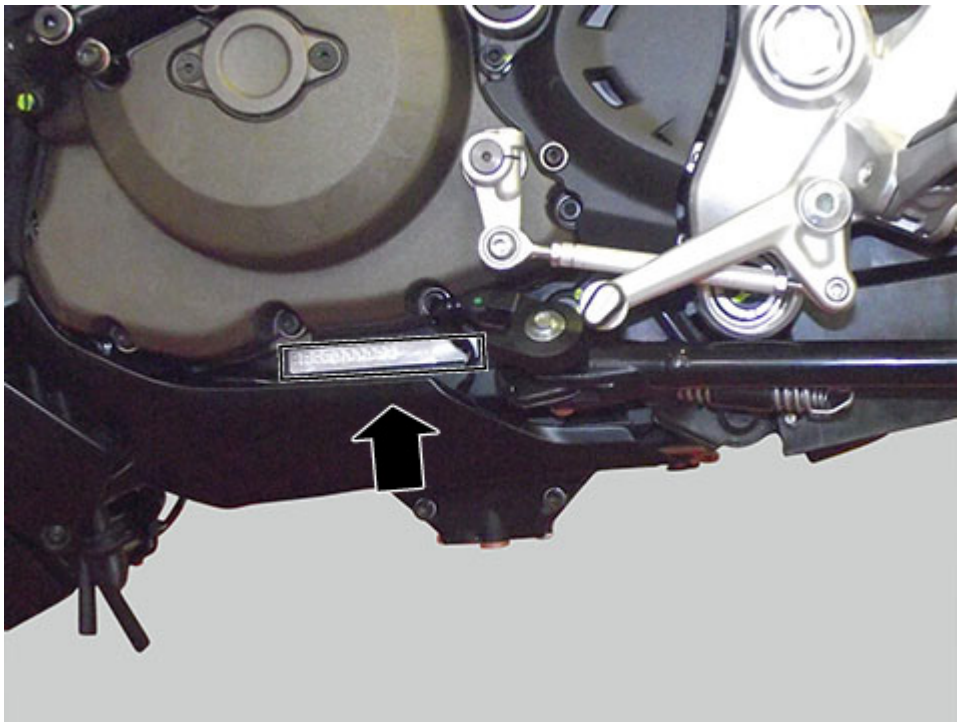

ALL MOTORS (EXCLUDING USA version)

Examples:
ZDM1198WP??????
ML01198WR??????

Following are the tables with the engine part numbers.

VERSION	**1**	**2**	**3**
EC version engine	ZDM	1198WP	??????
	ML0	1198WP	??????
FRANCE, BELGIUM version engine	ZDM	1198WR	??????
	ML0	1198WR	??????

Key to engine number:

1 Manufacturer: Ducati Motor Holding
2 Engine type
3 Progressive serial no.

For USA version ONLY

Following are the tables with the engine part numbers.

VERSION	**1**	**2**	**3**
USA version engine	RBZ	G	000001

Key to engine number:

1 Engine type
2 Model year: G=2016
3 Progressive serial no.

Lights/instrument panel

	Reference	Technical specifications
Headlight	low beam	H4 Blue Vision (12V - 60/55W)
	high beam	H4 Blue Vision (12V - 60/55W)
	front parking light	No. 6 LEDs (12V - 2.8W)
Tail light	stop indication light	No. 12 LEDs (13.5V - 2.8W)
	rear parking light	No. 8 LEDs (13.5V - 0.45W)
	Number plate light	No. 3 LEDs (13.5V - 0.7W)
Front turn indicators	(Europe version) - LED	No. 1 LED (13.5V - -3.1W)
	(USA version) - Lamp	RY 10W (12V - 10W)
Rear turn indicators	(Europe version) - LED	No. 1 LED (13.5V - -3.1W)
	(USA version) - Lamp	RY 10W (12V - 10W)

Fuses		
RH fuse box key	Lights	5 A
	Instrument panel	10 A
	Key-1	10 A
	Key-2	15 A
	Relay	20 A
	Control unit	5 A
	BBS	10 A
	Spare	10 A
	Spare	20 A
	Spare	15 A

LH fuse box key	Optional key	7.5 A
	Alarm	5 A
	Stop	5 A
	Diagnostics	3 A
	Spare	7.5 A
	Spare	25 A
	Spare	30 A

Key of fuses on solenoid starter	ABOVE, Regulator Protection	30 A
	ABOVE, Regulator Protection	30 A
	SIDE, ABS	30 A
	SIDE, ABS	25 A

Injection system

	Make	Type
Control unit	CONTINENTAL	M3D

Fuel system

Important

Do not use any additives in fuel or lubricants. Using them could result in severe damage of the engine and motorcycle components.

Warning

The motorcycle is only compatible with fuel having a maximum content of ethanol of 10% (E10). Using fuel with ethanol content over 10% is forbidden. Using it could result in severe damage to the engine and motorcycle components. Using fuel with ethanol content over 10% will make the warranty null and void.

Make	Type
Unleaded fuel Fuel specifications for the US market	95-98 RON Unleaded fuel with a minimum octane rating of 90 (RON+MON)/2
Throttle body	MIKUNI with full Ride-by-wire system Diameter: 56 mm
Injectors per cylinder	no. 1 (Continental DEKA V)
Firing points per injector	10

Injection-ignition system

	Reference	Technical specifications
Ignition	Type	Electric with inductive discharge, Twin Spark
Starting	Type	Electric starter motor, 12 V - 0.7 kW
Spark plugs	Make and type	NGK MAR9-J
	Electrode gap	0.8±0.1 mm
Coils	BERU Twin Spark	

Charging system/generator

	Reference	Technical specifications
Battery	Voltage	12 V
	Charge	10 Ah
	Type	dry, sealed, maintenance-free
Generator	Capacity	460W - 14 V - 33A Rated power 487 Watt at 6000 rpm. Minimum 22 A with 14 Volt at 1500 rpm.

Hydraulic brakes

Separate-action anti-lock brake system operated by hall-type sensors mounted to each wheel with phonic wheel detection: ABS can be disabled.

	Reference	Standard value	Service limit
FRONT			
Brake disc	Type	Drilled steel dual-disc	
	Thickness	4 mm	4 mm
	Braking surface material	Steel	
	Disc diameter	330 mm	
Brake calliper	Make	Brembo	
	Type	M4.30a	
	Calliper cylinder diameter	30	
	Pad friction material	Toshiba TT2182 FF	
Brake master cylinder	Type	PS 16/21	
REAR			
Brake disc	Type	Drilled steel disc	
	Thickness	5 mm	4.5 mm (min.)
	Diameter	245 mm	
Brake calliper	Make	Brembo	
	Type	P34e	
	Calliper cylinder diameter	34 mm	
	Pad friction material	Toshiba TT2172HH	
Brake master cylinder	Type	PS11	
	Master cylinder diameter	11 mm	

Rear suspension

	Reference	Technical specifications
Type		SACHS Progressive The shock absorber is adjustable for rebound and spring preload
Shock absorber	Stroke	64 mm
	Wheel travel	152 mm

The four different settings were defined based on average parameters (dressed rider weighing 80-90 kg, dressed passenger weighing 70-80 kg): "Standard", "Sport", "Comfort", "Rider+Passenger".

Adjustment range
- compression: 0 ÷ 14 clicks;
- rebound: 0 ÷ 39 clicks;
- preload: 4÷16 mm.

"Standard" adjustments

- compression: 14 clicks (from fully closed position);
- rebound: 16 clicks (from fully closed position);
- Spring preload: 12 mm.

"Sport" adjustments

- compression: 8 clicks (from fully closed position);
- rebound: 12 clicks (from fully closed position);
- Spring preload: 16 mm (from fully uncompressed).

"Comfort" adjustments

- compression: 20 clicks (from fully closed position);
- rebound: 16 (from fully closed position);
- Spring preload: 12 mm (from fully uncompressed).

"Rider+Passenger" adjustments

- compression: 10 clicks (from fully closed position);
- rebound: 14 clicks (from fully closed position);
- Spring preload: 16 mm (from fully uncompressed).

Rear wheel

	Reference	Standard value	Service limit
Minimum tread depth	In the most worn part		2 mm
Tyre pressure	Cold	2.1 bar (rider only) 2.5 bar (rider with passenger)	
Swinging arm shaft runout	On 100 mm		0.2 mm
Wheel rim runout	Radial	0.8 mm	2 mm
	Axial	0.5 mm	2 mm

Front suspension

	Reference	Technical specifications
Type	ÖHLINS	Hydraulic upside-down fork
	Leg diameter	Ø 48mm
	Travel on leg axis	130 mm
	Oil quantity, per leg (measured without spring or preload applied)	150 mm
		608.00 cc.

The four different settings were defined based on average parameters (dressed rider weighing 80-90 kg, dressed passenger weighing 70-80 kg): "Standard", "Sport", "Comfort", "Rider+Passenger".

Adjustment range
- compression: 0 ÷ 26 clicks;
- rebound: 0 ÷ 26 clicks;
- preload: 0÷14 turns.

"Standard" adjustments

- compression: 0÷10 clicks (from fully closed position);
- rebound: 0÷12 (from fully closed position);
- Spring preload: 0÷6 turns.

"Sport" adjustments

- compression: 0÷6 clicks (from fully closed position);
- rebound: 0÷8 clicks (from fully closed position);
- Spring preload: 0÷4 clicks (from fully uncompressed).

"Comfort" adjustments

- compression: 0÷25 clicks (from fully closed position);
- rebound: 0÷25 clicks (from fully closed position);
- Spring preload: 0÷6 turns (from fully uncompressed).

"Rider+Passenger" adjustments

- compression: 0÷8 clicks (from fully closed position);
- rebound: 0÷14 clicks (from fully closed position);
- Spring preload: 0÷8 turns (from fully uncompressed).

Front wheel

	Reference	Standard value	Service limit
Minimum tread depth	In the most worn part		2 mm
Front tyre pressure	Cold	2.3 bar (rider only) 2.3 bar (rider with passenger)	
Wheel shaft runout	On 100 mm		0.2 mm
Wheel rim runout	Radial	0.8 mm	2 mm
	Axial	0.5 mm	2 mm

Cooling system

	Reference	Technical specifications
Type	Liquid-cooling with closed-circuit radiator, twin fan with thermostat	
Coolant capacity		2.5±0.5 litres
Thermostat	Starts opening at	65 °C ±2 °C
	Electric fan enabling	103 °C
	Electric fan disabling	100 °C

Gearbox

	Reference	Standard value	Service limit
Gearbox shafts	End float		0.05÷0.20 mm
Selector drum	End float		0.10÷0.40 mm
Gear selector fork	Fork slider thickness	3.90÷4.00 mm	
	Fork–to-gear clearance	0.070÷0.285 mm	0.4 mm

Cylinder/piston

	Reference	Standard value	Service limit
	Cylinder nominal diameter	106 mm	
	Max. oval		0.005
	Max. taper		0.015 Inspection: Section A: 10 mm from the upper edge Section B: 50 mm from the upper edge Section C: 100 mm from the upper edge
Diameter	Section A Section B Section C	106.000 mm ÷ 106.010 mm 106.010 mm ÷ 106.020 mm 106.020 mm ÷ 106.030 mm	
Piston-to-bore clearance		0.060 ÷ 0.080 mm	
Piston	Nominal diameter	106mm	
Diameter	Section A Section B Section C	105.930 mm ÷ 105.940 mm 105.940 mm ÷ 105.950 mm 105, 950 mm ÷ 105, 960 mm	
Connecting rod	Connecting-rod big-end diameter	45 (+0.025; +0.013) mm	
	Crankshaft class	Connecting rod class	Bearings colour
Big-end bearing pairings	A B A B	A A B B	Yellow + Blue Yellow + Yellow Blue + Blue Yellow + Blue
Big-end bearing-to-crank pin clearance	Crankpin selection	0: Ø42.006(+0.016; +0.008) mm A: Ø42.006(+0.008; 0) mm B: Ø42.006(0; -0.008) mm C: Ø42.006(-0.008; –0.016) mm	
Gudgeon pin–to-piston clearance		0.015 ÷ 0.024 mm	
	Nominal diameter	Ø20 mm	
	Piston	Ø20(+0.020;+0.015) mm	
	Gudgeon pin	Ø 18(+0;0.004) mm	
Gudgeon pin-to-connecting		0.035 ÷ 0.049 mm	

rod clearance			
Engine cylinder compression measured with DDS2		11÷12 bar	10 bar (MIN.), difference between the two cylinders: 2 bar (MAX.)

Crankshaft

	Reference	Standard value	Service limit
Crankshaft	Oval		0.005 mm
	Taper		0.005 mm
	Main journal alignment		0.01 mm on diameter

Timing system/valves

	Reference	Assembly value	Check value every 24,000 km
Timing diagram	With 1 mm valve lift		
	Intake	Opening 4° B.T.D.C. Closing 58° A.B.D.C.	
	Exhaust	Opening 58° B.B.D.C. Closing 7° A.T.D.C.	
	Intake valve diameter	43.5 mm	
	Exhaust valve diameter	35.5 mm	
Valve lift	With 0 mm valve clearance	Intake Exhaust	12.2 mm 11.2 mm
Valve clearance			
	Opening rocker arm - intake	0.13÷0.18 mm	0.10÷0.25 mm
	Opening rocker arm - exhaust	0.13÷0.18 mm	0.10÷0.25 mm
	Closing rocker arm - intake	0.05÷0.10 mm	0.05÷0.15 mm
	Closing rocker arm - exhaust	0.05÷0.10 mm	0.05÷0.15 mm

Transmission

Reference	Technical specifications
Clutch	Hydraulically-controlled slipper/self-servo wet multiplate clutch.
Clutch control	Hydraulically operated by a control lever on the handlebar left side
Gearbox	6 speed
Front chain sprocket/clutch gearwheel ratio (primary drive)	33/61
Drive ratio	1.848:1
Gearbox output sprocket/rear chain sprocket ratio (final drive)	15/41
Gearbox type	With constant mesh spur gears, operated by a lever on the left side of the motorcycle

Transmission	Gear ratios	
	1st	15/37 2.467:1
	2th	17/30 1.765:1
	3th	20/27 1.350:1
	4th	22/24 1.091:1
	5th	24/23 0.958:1
	6th	25/22 0.880:1

Drive chain	Make	DID	
	Type	520 VF	
	No. of links	108	

Colours

DUCATI RED	
Primer (Acriflex White)	L0040652 (Lechler)
Primer (Ducati Red)	473.101 (PPG)
Varnish (Acriplast Red Stoner SF)	LMC06017 (Lechler)
Red frame (Ducati Red)	81784 (Inver Spa)
Rear subframe (Matt Powder Enamel)	CN201V (Akzo Nobel)
Rims (Glossy Black)	VPCH03250 (Peter Lacke)

THRILLING BLACK	
Primer (Black primer 2 K)	part no. 873.A002 (PALINAL)
Primer, Black Stealth (Black 94)	part no. 929.R223 (PALINAL)
Clear lacquer	part no. 923M1598 (PALINAL)
Ducati dark Chrome frame	part no. 73471114 (AKZO)
Rear subframe, Matt Black powder enamel	part no. CN201V (AKZO Nobel)
Rims, Glossy Black	part no. VPCH03250 (Petere Lacke)

General

	Reference	Technical specifications
Motorcycle dimensions	Total length	2121 mm
	Handlebar maximum width (at handgrip counterweights)	845 mm
	Total height (at front brake fluid reservoir)	1150 mm
	Seat height	829 mm
	Minimum ground clearance	160 mm
	Front footpeg height	375 mm
	Rear footpeg height	545mm
	Wheelbase	1508 mm
Frame	Type	Molybdenum-chrome steel tubular trellis fixed to the head
Subframe	Type	Die-cast aluminium tubular trellis
	Steering head angle	26.5° (+0°; +0.3°)
	Steering angle	35° right side / 35° left side
	Trail	89 mm
	Front suspension	ÖHLINS hydraulic upside-down fork with spring preload, compression and rebound adjustment Leg diameter: 48 mm
	Front wheel travel	130 mm
	Rear suspension	Progressive with ÖHLINS monoshock, fully adjustable. Suspension travel: 64 mm Wheel travel: 152 mm.
	Front wheel rim	Light aluminium alloy rim with three W-shaped spokes
	Front wheel rim size	MT3.50"x17"
	Front tyre size	120/70 - ZR 17
	Rear wheel rim	Light aluminium alloy rim with three W-shaped spokes
	Rear wheel rim size	MT6.00"x17"
	Rear tyre size	200/55 - ZR 17
	Type of tyres	Radial, tubeless
	Front brake	With drilled steel dual-disc ABS as a standard

	Rear brake	With fixed drilled steel disc. ABS as a standard.
	Steering damper	Ohlins, adjustable
Engine	Type	Testastretta 11°, twin cylinder 90° "L" type
	Bore	106 mm
	Stroke	67.9 mm
	Displacement	1198 cu.cc
	Compression ratio	(12.6±0.5):1
	Con-rod length	122.5 mm
	Timing system	Toothed belt type with two overhead camshafts Desmodromic, 4 valves per cylinder and eight rocker arms
	Lubrication system	Forced lubrication by pump with cooling radiator
	Oil pump type	Gear type, with bypass valve
	Cooling system	Liquid type
	Air filter	One cylindrical filtering element
	Crankshaft type	One-piece
	Clutch	FCC wet slipper clutch with less effort at the lever
	Max. rotation speed	10200 rpm
	Max crankshaft power (95/1/CD)	117.7 kW/160HP at 9250rpm
	Max crankshaft power (95/1/CD) (FRANCE version)	71 kW/95HP at 6000rpm
	Max torque at crankshaft (95/1/EC)	131.4Nm/13.4 kgm at 7750rpm
	Max torque at crankshaft (95/1/EC) (FRANCE version)	115Nm/11.7 kgm at 5750rpm

Dimensions

SIDE

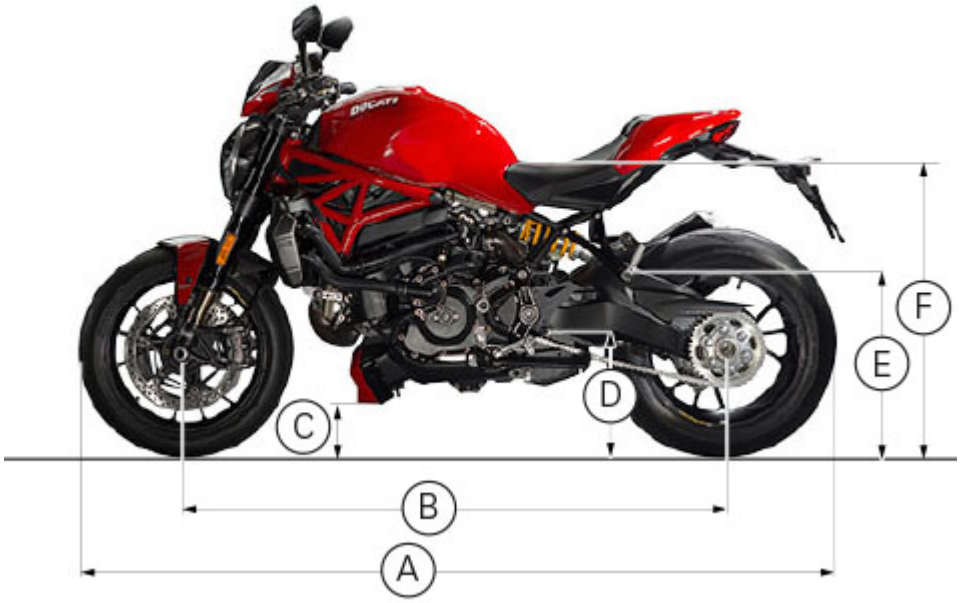

Key to (side) overall dimensions
A: total length = 2121 mm
B: wheelbase = 1508 mm
C: minimum ground clearance = 160 mm
D: front footpeg height = 375 mm
E: rear footpeg height = 545 mm
F: seat height = 829 mm

FRONT



Key to (front) overall dimensions
G: handlebar height (at counterweights) = 1050 mm
H: maximum height (at headlight fairing) = 1150 mm
I: maximum width (handgrip counterweights) = 845 mm

Fuel, lubricants and other fluids

Warning
Failure to observe weight limits could result in poor handling and impair the performance of your motorcycle, and you may lose control of the motorcycle.

Fuel, lubricants and other fluids	Type	cu. dm(litres)
Fuel tank, including a reserve of 2.5 cu.dm (litres)	Unleaded fuel with 95 RON fuel octane rating (at least). For the US market, unleaded fuel with 90 (RON+MON)/2 fuel octane rating (at least).	17.5
Oil sump and filter	Ducati recommends you use Shell Advance 4T Ultra 15W-50 oil. As an alternative it is possible to use a motorcycle engine oil having the same degree SAE 15W-50 and meeting the following specifications JASO: MA2 and API: SM.	4
Front/rear brake and clutch circuits	SHELL – Advance Brake DOT 4	-
Protectant for electric contacts	SHELL – Advance Contact Cleaner	-
Front fork (OHLINS)	SHELL - Advance Fork 7.5 or Donax TA	150 mm (measured without spring or preload tube) 608.0 cc.
Cooling circuit	ENI Agip Permanent Spezial antifreeze (do not dilute, use pure)	2.5

Important
Do not use any additives in fuel or lubricants. Using them could result in severe damage of the engine and motorcycle components.

Warning
The motorcycle is only compatible with fuel having a maximum content of ethanol of 10% (E10). Using fuel with ethanol content over 10% is forbidden. Using it could result in severe damage to the engine and motorcycle components. Using fuel with ethanol content over 10% will make the warranty null and void.

Engine oil
A good quality engine oil has special properties. Use only a highly detergent engine oil with certified SE, SF or SG or higher service ratings as marked on the container.

Recommendations concerning oil
It is recommended to use oil complying with the following specifications:

- viscosity grade SAE 15W-50;
- standard API: SM;
- standard JASO: MA2.

SAE 15W-50 is an alphanumerical code identifying oil class based on viscosity: two figures with a W ("winter") in-between; the first figure indicates oil viscosity at low temperature; the second figure indicates its viscosity at high temperature. API (American standard) and JASO (Japanese standard) standards specify oil characteristics.

Engine tightening torque values

Description	Thread pitch	Torque (Nm)			Notes
Head					
Fixed and mobile tensioner pin	M20x1	50	45	55	LOCK 2 or TB1324
Camshaft belt roller ring nut	M17x1	71	64	78	GREASE A
Rocker arm shaft blanking plug + washer	M12x1.25	15	14	16	Pre-applied threadlocker on new part - LOCK2 for reuse (or TB1324)
Nut for head/cylinder stud bolt	M10x1.5				GREASE C on nut underhead and on stud bolt thread
Snug torque		20			
Preload torque		40	38	42	
Tightening torque		60	57	63	
Camshaft cap retaining screw	M8x1.25				Apply engine oil
Preload torque		10	9	11	
Tightening torque		22.5	21	25	
Belt roller flange retaining screws	M6x1	14	12.5	15.5	
Head cover retaining screw	M6x1	10	9	11	
Head cover retaining special screw M6-M5	M6x1	10	9	11	LOCK4
Exhaust manifold stud bolt	M6x1	10	9	11	LOCK 5
Screw securing vacuometer to head	M6x1	5	4	6	LOCK 2 or TB1324
Head union for canister	M6x1	5	4	6	
Horizontal head air breather union + washer	M6x1	2.5	2	3	LOCK 2
MAP sensor special screw	M6x1	5	4	6	
Vertical head air breather blanking screw + washer	M6x1	8	7	9	LOCK 2
Intake manifold retaining screw	M6x1	10	9	11	
Secondary air cover retaining screw	M5x0.8	6	5	7	
Screw securing water unions to head	M5x1	6	5	7	Pre-applied threadlocker on new part - LOCK 2 for reuse
Casing					
Oil cartridge	M16x1.5	11	10	12	Engine oil on seal

Nipple for oil cartridge	M16x1.5	42	38	46	LOCK 2 or TB1324
Oil intake service plug (low sump)	M16x1.5	24	21	27	LOCK 5
Oil drain plug with magnet	M12x1.5	20	18	22	TB1215
Clutch casing oil delivery channel plug	M10x1.5	15	13	17	LOCK 5
Oil pump screw reduction bushing	M10x1				LOCK 5
Clutch casing inner oil channel grub screw	M10x1.5	15	13	17	LOCK 5
Roller bearing bush hole blanking special screw	M10x1.5	22	20	24	LOCK 2 or TB1324
Cylinder/head stud bolt	M10x1.5	30	28	32	LOCK 2 or TB1324
Casing jointing screw in cylinder area	M8x1.5				GREASE B on thread
Preload torque		19	17	21	
Tightening torque		25	22	28	
Casing central jointing screw + swinging arm shaft	M8x1.25				GREASE B on thread
Preload torque		19	17	21	
Tightening torque		25	22	28	
Gear stopper lever retaining screw	M8x1.25	18	16	20	LOCK 2 or TB1324
Special dowel for roller bearing bush	M8x1.25	16	15	17	LOCK 2 or TB1324
Nut retaining oil adjustment screw to clutch	M8x1	11	10	12	
Blow-by valve retaining screw	M6x1	10	9	11	
Secondary bearing (chain side) stopper screw	M6x1	10	9	11	LOCK 2 or TB1324
Primary bearing (clutch side) stopper screw	M6x1	10	9	11	LOCK 2 or TB1324
Casing jointing screw in idle gear shaft area	M6x1	10	9	11	
Casing outer jointing screw	M6x1	10	9	11	
Mesh filter blanking screws	M6x1	9	8	10	TB1215
Radial pick-up retaining screw	M6x1	10	9	11	
Oil squirter under piston retaining screw	M5x0.8	8	7	9	LOCK 2 or TB1324
Blow-by valve upper shell screw	M3x0.5	1.2	1	1.4	LOCK5
Electric starter					
Starter motor inner retaining screw	M6x1	10	9	11	Pre-applied threadlocker on new part - LOCK2 for reuse

Starter motor outer retaining screw	M6x1	10	9	11	Pre-applied threadlocker on new part - LOCK2 for reuse
Starter motor rear retaining screw	M6x1	10	9	11	Pre-applied threadlocker on new part - LOCK2 for reuse
Connecting rods					
Flywheel retaining nut	M28x1.5				
1) Snug torque at 50 Nm and 50rpm		50			LOCK5
2) Tightening of 36°±1° at 30rpm					LOCK5
3) Torque check		330 to 400			LOCK5
Primary sprocket retaining ring nut	M24x1	190	171	209	GREASE B
Balancing plug	M12x1.25	28	26	30	Pre-applied threadlocker
Connecting rod bolt (Class 14.9)	M10x1				
1) Apply the indicated product					GREASE B on thread and underhead
2) Tightening at 35Nm at 50rpm		35			GREASE B on thread and underhead
3) Pause of 2 seconds and 360° loosening at 30rpm					GREASE B on thread and underhead
4) Snug torque at 20Nm at 30rpm		20			GREASE B on thread and underhead
5) Snug torque at 35Nm at 10rpm		35			GREASE B on thread and underhead
6) Tightening of 65°±1° at 14rpm					GREASE B on thread and underhead
7) Torque check		70 to 113			
Gear selector control					
Gearbox drum positioning screw	M16x1.5	30	27	33	
Gear sensor	M12x1.25	12	11	13	
Gearbox pawl screw	M8x1.25	36	34	38	LOCK 2 or TB1324
Pawl positioner retaining nut	M6x1	10	9	11	
Gearbox pawl screw	M6x1	16	15	17	LOCK 2 or TB1324
Timing system					
Timing layshaft belt roller ring nut	M15x1	71	64	78	GREASE A
Camshaft gear nut	M14x1	55	50	60	GREASE A
Nut securing FIXED tensioner	M8x1.25	25	22	28	GREASE A
Nut securing MOBILE tensioner	M8x1.25	25	22	28	GREASE A

PLASTIC cover filter support self-tapping screw	3.5	1.75	1.5	2	
Covers					
Water intake union	M30x1.5	25	23	27	LOCK 5
Water delivery union	M22x1.5	25	23	27	LOCK 5
Wet clutch fluid filler cap	M20x2.5	5	4.5	5.5	
Pick-up + washer inspection screw	M12x1	15	13	17	LOCK 2 or TB1324
Water pump cover plug + washer	M10x1	15	13.5	16.5	
Clutch recess blanking plug + washer	M10x1	11	10	12	
Oil duct blanking plug	M10x1	15	13.5	16.5	LOCK 5
Water pump bearing retaining screw + washer	M6x1	10	9	11	LOCK 2 or TB1324
Timing inspection cover screw	M6x1	5	4.5	5.5	
Alternator cover closing screw	M6x1	13.5	12.5	14.5	
Water pump cover blanking screw (through hole), + washer	M6x1	13.5	12.5	14.5	
Water pump plug blanking screw (blind hole)	M6x1	13.5	12.5	14.5	
Generator stator retaining screw	M6x1	10	9	11	LOCK2 or TB1324
Clutch cover closing screw	M6x1	13.5	12.5	14.5	
Special screw securing generator cover to stud bolt	M6x1	13.5	12.5	14.5	
Sound-deadening panel retaining screw	M6x1	12	10	14	LOCK5
Gearbox and clutch					
Clutch drum nut	M25x1.25	190	180	200	GREASE B
Wet clutch spring screw	M6x1	10	9	11	
Ignition					
Spark plug	M10x1	12	11	13	
Screw securing rotor to flywheel	M6x1	13	11	15	Pre-applied threadlocker on new part - LOCK2 for reuse
Oil pump					
By-pass pump plug	M15x1	17	15	19	LOCK 5
Oil pump retaining screw + washer	M8x1.25	26	23	29	

Oil pump assembling screw	M6x1	10	9	11	
Oil pump retaining screw + washer	M6x1	10	9	11	
Cylinders					
Water union	M22x1.5	25	23	27	Pre-applied threadlocker (alternative for Brazil: LOCK5)
Cooling system					
Water circuit ties		2.5	2	3	

Frame tightening torque values

Description	Threading	Nm ±10% Tolerance	Notes
Headlight fairing			
LH rear-view mirror fastener	M8x25	25	
RH rear-view mirror fastener	M8x25 - LH	25	
Screw retaining Plexiglas to headlight fairing	M4x0.5	0.2	
Screw retaining bracket front side to headlight support	M6x1	10	
Screw retaining RH and LH headlight fairing panels to support bracket	M5x0.8	2.5	
Stand			
Side stand plate to engine retainer	M10x1.25	42*	LOCK2
Stand sensor to stand pin retainer	M6x1	5	Pre-applied threadlocker
Nut securing stand to stand plate	M8x1.25	24	
Stand plate pin	M8x1.25	24	
Stand plate pin	M8x1.25	24	GREASE A; after tightening, clean any residues from the free thread and apply LOCK2
Chain and front sprocket			
Sprocket retaining nut	25x1.5	186*	GREASE B
Front sprocket cover retainer	M6x1	6	LOCK 2
Lights			
Headlight to support retainer	M6x1	8	
Headlight support to bottom yoke fastener	M6x1	8	
Front turn indicators to headlight support retainer	M5x0.8	3	LOCK 2
Headlight unit to headlight support retainer	AF5	1	
Headlight unit to headlight support retainer	M5x0.8	5	
Tail light support to rear subframe retaining screw	AF5	3	
Rear turn indicator plates to rubber spacers retainer	M5x0.8	3	LOCK2

Rear turn indicator rubber spacer to rear guard retainer	M5x0.8	2.5	LOCK2
Instrument panel			
Instrument panel to support retainer	M5x0.8	5	
Retainer of instrument panel to instrument panel cover and support	M5x0.8	5	
Screw securing instrument panel to instrument panel cover and support	M5x0.8	5	
Front fork			
Steering bearing ring nut	M35x1	30*	GREASE B
Steering head locking screw on fork legs	M8x1.25	24*	GREASE B
Steering head central locking screw	M8x1.25	24*	GREASE B
Bottom yoke locking screw	M8x1.25	22*	GREASE B (sequence 1-2-1)
Handlebar U-bolt locking screw	M8x1.25	25*	GREASE B (sequence 1-2-3-4-3)
Nut securing handlebar lower U-bolts to steering head	M10x1.25	45*	
Steering limit stop adjuster lock nut	M8x1.25	18	LOCK 2
Screw securing clutch cable ring to steering head	M6x1	8	Pre-applied threadlocker
Screw securing brake cable ring to steering head	M6x1	8	Pre-applied threadlocker
Screw securing brake hose guide to bottom yoke	M6x1	10	Pre-applied threadlocker
Screw securing speed sensor hose guide to left fork bottom end	M6x1	10	
Ohlins fork bottom end locking screw	M8x1.25	19*	GREASE B (sequence 1-2-1)
Steering damper			
Screw securing clutch cable ring to steering head	M6x1	8	pre-applied threadlocker
Screw securing brake cable ring to steering head	M6x1	8	pre-applied threadlocker
Steering damper screw on upper handlebar U-bolt retainer	M6x1	10	pre-applied threadlocker
Steering damper eyebolt screw on support retainer	M6x1	10	pre-applied threadlocker
Steering damper support screws to special support nuts retainer	M6x1	8	
Eyebolt to Ohlins steering damper retainer	M8x1.25	10	LOCK8
Steering damper special nut to key switch cover			

shear bolt retainer	M6x1	8	LOCK1
Electric system			
Screw securing the voltage regulator protection to the battery mount cover	M5x0.8	3	
Screw securing battery mount cover to electrical component support	M6x1	5	
Screw securing battery box heat guard to electric component support	M5x1	3.5	
Screw securing cables to solenoid starter	M6x1	5	
Screw securing electrical component support to engine	M8x1.25	18	LOCK 2
Screw securing solenoid starter cover to electric component support	M5x0.8	4	
Screw securing fuse support rubber bracket to electric component support	4	2.3	If an air gun is used, apply a speed of 500rpm
Screw securing electric component pin to electric component LH bracket	M10x1.25	20	GREASE B
Screw securing electric component RH bracket to engine	M10x1.25	36	GREASE B
Lock nut retaining electric component support RH bracket to electric component pin	M6x1	10	
Coil to coil support upper retaining screw	M5x0.8	6	
Coil to coil support lower retaining screw	M5x0.8	6	
Screw securing coil support to frame	M5x0.8	6	
Screw securing wiring protection to vertical head	M5x0.8	5	
Screw securing ignition switch to frame	M6x1	>12	Pre-applied threadlocker; Shear the screw head
Screw securing fuse wiring bracket to connector	M6x1	10	
Screw securing horn to oil cooler support bracket	M6x1	6	
Screw securing RH/LH switches	M4x0.7	1.3	
Nut securing starter motor cable	M6x1	5	
Front ABS sensor retaining screw	M6x1	7	Pre-applied threadlocker
Rear ABS sensor retaining screw	M6x1	7	Pre-applied threadlocker
Ground cable on engine retaining screw	M6x1	10	
Screw securing voltage regulator + regulator protection	M5x0.8	5	LOCK2
Screw securing the exhaust valve motor to electric component support	M5x0.8	5	

Stud bolt securing voltage regulator + regulator protection	M6x1	8	
Rear swinging arm			
Eccentric hub screw	M14x1.5	40*	GREASE B (on thread and underhead)
Swingarm shaft screw	M15x1.25	72*	GREASE B (on thread and underhead)
Rear brake calliper holder plate pin	M12x1.25	33*	Pre-applied threadlocker
Speed sensor cable ring retainer	M4x0.7	1	
Upper chain sliding shoe to chain guard retainer	M5x0.8	5	
Lower chain sliding shoe to swinging arm retainer	M5x0.8	5	Pre-applied threadlocker
Lower chain sliding shoe to swinging arm and chain guard retainer	M5x0.8	5	
Screw securing chain guard to swinging arm	M5x0.8	5	Pre-applied threadlocker
Screw securing chain sliding shoe to swinging arm	M5x0.8	5	Pre-applied threadlocker
Screw securing rear brake hose guide to swinging arm	M5x0.8	5	Pre-applied threadlocker
Braking system			
Screw securing front brake master cylinder to handlebar	M6x1	10	Sequence 1-(UP)-2-1
Front brake calliper retaining screw (RH+LH)	M10x1.25	45*	GREASE B
Front brake calliper pre-tightening for settling (RH+LH)	M10x1.25	2	GREASE B
Union on brake master cylinder tightening	M10x1	23	
Unions to ABS control unit tightening	M10x1	23	
Brake calliper bleeder tightening (RH/LH)	M6x1	4	
Screw securing ABS control unit to bracket	M6x1	6.8±1	LOCK 2
Screw securing ABS fuse support bracket to frame	M6x1	10	
Screw securing ABS control unit to ABS fuse support bracket	M6x1	10	Pre-applied threadlocker
Brake draining union	M10x1	23	
Rear brake calliper retaining screw	M8x1.25	25*	GREASE B
Screw securing ABS hose rear bracket to engine	M6x1	10	Pre-applied threadlocker
Screw securing ABS hose plug to ABS hose support bracket	3.5	1.6	

Screw securing rear brake master cylinder and fluid reservoir retaining plate to RH footpeg	M6x1	10	LOCK 2
Screw securing rear brake fluid reservoir to support	M6x1	2	
Number plate holder			
Screw securing number plate holder to rear guard	M6x1	5	
Screw securing number plate light to plastic support 1200R	M4x0.7	1.5	
Cat's eye support sheet to plastic support 1200R retainer	M5x0.8	3.5	LOCK2
Plastic support to rear guard retainer	M5x0.8	5	
Special screw to rear subframe 1200R retainer	M6x1	10	
Nut securing cat's eye to plate	M4x0.7	1.5	
Number plate holder plate to rear guard retainer	M6x1	8	
Handlebars - clutch control			
Clutch bleeder tightening	M6x1	4	
Clutch hose union tightening	M10x1	23	
Screw retaining clutch control piston	M6x1	10	Sequence 1-2-3-1
Clutch master cylinder retaining screw	M6x1	10	Sequence 1-(UP)-2-1
Ashai Denso throttle control to handlebar retainer	M5x0.8	3.5	
Counterweights to handlebar retainer	M6x1	10	
Rear suspension			
Screw securing shock absorber to vertical head	M10x1.25	42*	GREASE B
Screw securing shock absorber to rear swinging arm	M10x1.25	42*	GREASE B
Front mudguard			
Carbon front mudguard retainer (RH+LH)	M6x1	5	Pre-applied threadlocker
Front brake hose guide on mudguard retainer	3.5	0.4	
Cooling system			
Upper screw securing radiator to frame	M6x1	10	
Threaded pin to horizontal head retainer	M6x1	10	

Screw securing radiator to threaded pin	M5x0.8	5	Pre-applied threadlocker
Screw securing expansion reservoir support bracket to manifold	M6x1	10	
Screw securing expansion reservoir to bracket	M6x1	8	
Bushing on reservoir retaining screw	M6x1	8	
Water hose clamps on radiator and thermostat retainer		3	
Water hose clamp on thermostat retainer		3	
Breather pipe on vertical head fixing tie		0.6	
Horizontal head thermostat union retaining clamp		0.6	
Tie securing expansion reservoir to ABS support bracket		3	
Vertical head to union retaining clamp		3	
Footpegs and levers			
Brake lever pin on footpeg plate	M8x1	24	Pre-applied threadlocker
Stop switch on footpeg holder plate	M8x1	5	
Brake master cylinder control rod fastener	M6x1	7.5	
Brake lever adjuster retainer	M6x1	8	
Rear brake return spring retaining pin	M6x1	10	LOCK2
Footpeg holder plate to adjuster retaining screw	M10x1.25	45*	GREASE B
Footpeg holder plate and rear subframe to engine retaining nut	M12x1.25	60*	GREASE B
Screw securing silencer heel guard to footpeg holder plate	M6x1	8	LOCK2
Screw securing footpeg holder plate cover to rear subframe	M8x1.25	24*	LOCK2
Screw securing RH footpeg holder plate to rear frame	M8x1	25*	Pre-applied threadlocker
Footpegs and levers: left side — gearbox			
Gearchange lever pin on footpeg holder plate	M8x1	24	Pre-applied threadlocker
Screw securing gearchange rod joints to gear shift lever	M6x1	10	
Screw securing gearchange rod joints to gear shift lever	M6x1	10	Pre-applied threadlocker
Screw locking gearchange lever to pawl	M6x1	10	Pre-applied threadlocker

Right nut locking joints to gearchange rod	M6x1	5	
Left nut locking joints to gearchange rod	M6x1	5	
Footpeg holder plate to adjuster retaining screw	M10x1.25	45*	GREASE B
Screw securing silencer heel guard to footpeg holder plate	M6x1	8	LOCK2
Screw securing footpeg holder plate cover to rear subframe	M8x1.25	24*	LOCK2
Screw securing LH footpeg holder plate to rear frame	M8x1	25*	Pre-applied threadlocker
Rear mudguard			
Screw securing rear mudguard to swinging arm	M5x0.8	5	Pre-applied threadlocker
Front wheel			
Brake disc retaining screw	M8x1.25	30*	Pre-applied threadlocker
Front wheel nut	M25x1.25	63*	GREASE B
Tyre (angle) valve locking nut	M8x1.25	9	LOCK 2
Rear wheel			
Rear sprocket fastener	M10x1.25	44	LOCK 2
Rear sprocket side wheel shaft retainer (LH)	M48x1.5	230*	GREASE B
Rim side wheel shaft retainer (RH)	M48x1.5	230*	GREASE B
Brake disc retaining screw	M8x1.25	25*	LOCK 2
Phonic wheel retainer	M5x0.8	5*	Pre-applied threadlocker
Valve retainer	M8x1.25	9	
Fuel tank			
Screw retaining buffers to fuel tank	M5x0.8	6	
Tank plug retaining screw	M5x0.8	4	(TCEI)
Tank plug retaining screw	M5x0.8	4	(TCEI M5x14 8.8)
GAC retaining screw	M5x0.8	5	GREASE B
Male quick coupling fastener	1/4 NPT	10	LOCK 6
Belt knob to tank retainer	M6x1	8	
Exhaust			
Nut securing exhaust pipe flange to vertical and	M6x1	10	

horizontal head			
Endcap (upper and lower) to silencer retaining screw	M5x0.8	4	
Silencer heat guard retaining screw	M5x0.8	4	
Lambda sensor fastener	M12x1.25	25	
Exhaust gas plug retainer	M10x1.25	25	GREASE I
Screw securing silencer to bracket	M6x1	7	
Silencer clamp retainer		18	
Exhaust valve pulley retaining screw	M6x1	8	
Vertical primary heat guard retaining screw	M6x1	8	
Vertical and vertical primary manifold heat guard retaining clamps		2.5	
Silencer endcap 1200 retainer	M6x1	5.5	
Vertical primary and vertical manifold to heat guard clamps		5	Use a teflon spacer
Screw securing silencer to bracket		20	
Clamp retaining heat guard to vertical manifold 5Nm		5	
Seat assembly			
Seat cover retaining screw	M5x0.8	4	
Seat lock to seat bottom cover ring nut retainer	M22x1.25	4	
Screw securing seat plate to seat	3.5	1	
Frame assembly			
Frame to horizontal and vertical head retaining screw	M12x1.25	90*	GREASE B (on thread and underhead)
Screw retaining subframe to vertical head	M18x1.5	150*	GREASE B (on thread and underhead)
Tank pin retaining plate to tank seat support retaining screw	M5x0.8	5	
Screws securing latch to rear subframe	M6x1	5	
RH and LH grab handle to frame rear plate retaining screws	M6x1	10	
Lubrication system			
Screw securing oil hose clip plate to casing	M6x1	10	Pre-applied threadlocker
Screw retaining radiator support to horizontal head	M8x1	25	

Screw retaining radiator support to horizontal head	M6x1	10	Pre-applied threadlocker
Screw securing oil cooler to bracket	M6x1	6	
Fastener securing pressure switch to oil cooler		19	Lubricate with engine oil
Fastener securing nipple to oil cooler	M14x1.5	23	LOCK 1
Fastener securing pipe to nipple	M16x1.5	18	Lubricate with engine oil
Air inlet - oil breather			
Blow-by pipe clip		1.5	
Screw securing ECU and electric component support to airbox upper box	M5x0.8	5	
Screw securing ignition switch connector support to ECU and electric component support	M5x0.8	5	
Screw securing ECU to ECU and electric component support	M5x0.8	5	
Screw securing air temperature sensor to airbox upper box	3.5	0.3	
Screw securing clamp base to airbox upper box	3.5	0.5	
Screw securing throttle body to airbox lower box	M6x1	8	
Screw securing fuel pipes to throttle body	M5x0.8	5	
Screw securing intake funnels to throttle body	M5x0.8	5	Pre-applied threadlocker
Screw securing air filter cover to airbox upper box	M5x0.8	3	
Air filter retaining ring nut	M6x1	6	
Screw securing upper box to airbox lower box	5	2.25	
Clip securing throttle body to intake ducts		2.5	
Secondary air system actuator to airbox upper box retainer	3.5	0.3	
Nut securing ECU and electric component support to airbox upper box	M5x0.8	2	Pre-applied threadlocker
Fairings			
Water radiator cover to water radiator retaining screw	M5x0.8	3	(TBEIF M5x14 10.9) Pre-applied threadlocker
Water radiator cover to water radiator retaining screw	M5x0.8	3	(TCEI special screw M5x12 black)
RH/LH fan cover to water radiator retaining screw	M5x0.8	3	(TCEI special screw M5x12 black) Pre-applied threadlocker
RH/LH fan cover to water radiator retaining			

screw	M5x0.8	3	(TCEI special screw M5x12 black)
RH/LH cover to RH/LH fan cover retaining screw	5	0.7	
Grit cover to oil cooler retaining screw	M5x0.8	4	
Grit cover to painted grit frame (Well Nut) retaining screw	M5x0.8	0.8	
Lateral cover to oil cooler retaining screw	M5x0.8	4	Pre-applied threadlocker
LH lateral cover to wiring support retaining screw	M5x0.8	4	
Screw securing wiring support to engine	M5x0.8	5	
RH lateral cover to engine retaining screw	M6x1	1	
Screw securing wiring cover to engine	M5x0.8	5	
LH lateral cover to wiring cover retaining screw	M5x0.8	3	
Screws securing underseat plate cover to rear subframe	M5x0.8	3	
Screws securing underseat plate cover to rear subframe special screw	M5x0.8	5	
Screw securing Canister support to purge valve bracket on frame	M5x0.8	4	

*dynamic safety-critical point; tightening torque tolerance must be Nm ±5%.

Diagnosis special tools

PART NO.	DESCRIPTION	IMAGE
28620441A	"PC HASP DDS2.0" wrench	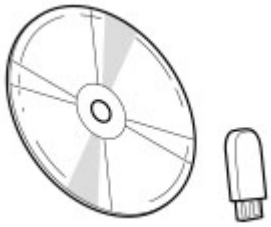
979000252	DDS 2 (Ducati Diagnosis System 2.0)	
979000253	Belt tensioning	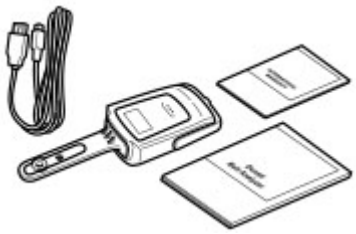
979000254	Diagnosis and power supply cable	
979000255	Diagnosis and power supply cable (CAN)	
979000256	Power supply cable from DDS battery	

Frame special tools

PART NO.	DESCRIPTION	IMAGE
80007.0139	Front wheel shaft wrench	
88713.1058	Wrench to fit steering tube plug	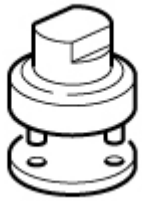
88713.1062	Steering tube bearing installation tool	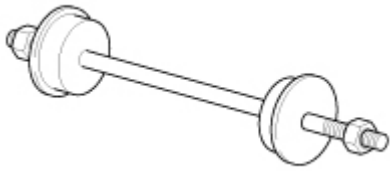
88713.1074	Swingarm shaft removal tool	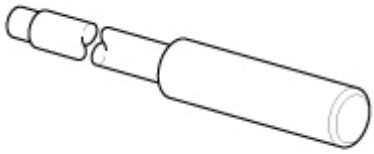
88713.2409	Ball bearing installation tool	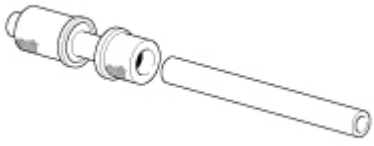
88713.2951	Rear wheel balancing tool	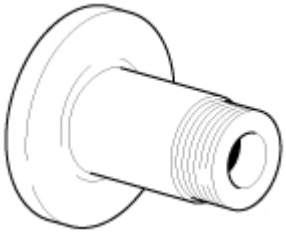
88713.3211	Eccentric hub adjusting wrench	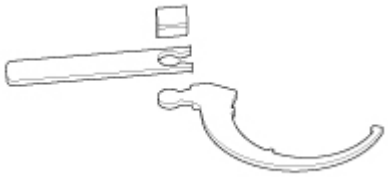

88713.3220	Engine repair work bench	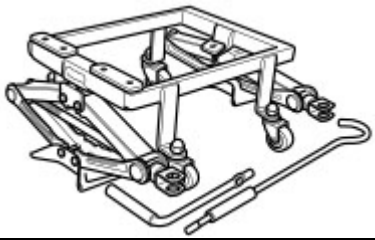
88713.4513	Frame/engine support	

Engine special tools

PART NO.	DESCRIPTION	IMAGE
88713.0869	Water pump seal installation tool	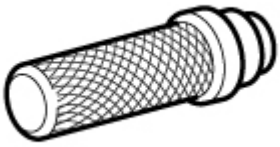
88713.0870	Counter-washer installation tool	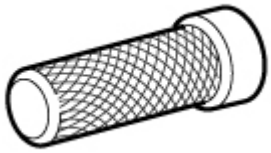
88713.0944	Oil cartridge wrench	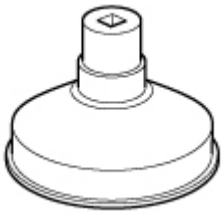
88713.1010	Exhaust gas suction fitting	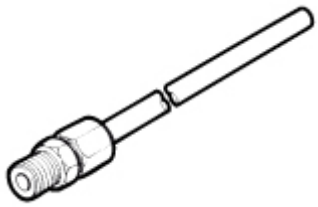
88713.1749	Puller for driving pulley	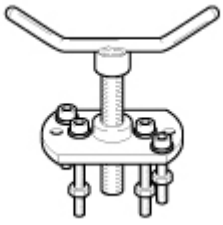
88713.1805	Driving pulley tightening tool	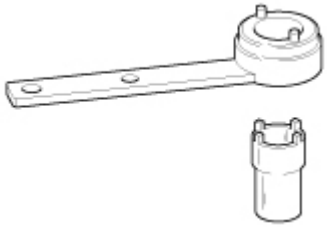
88713.1806	Belt roller reaction tool	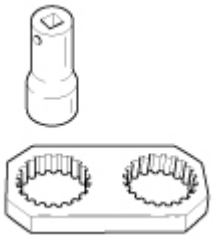

88713.1821	Tensioner pin wrench	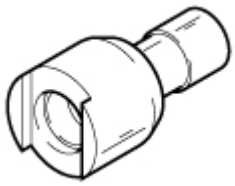
88713.1832	Engine repair work bench	
88713.1906	Seal ring installation tool	
88713.1920	Tool to install U-bolt O-ring	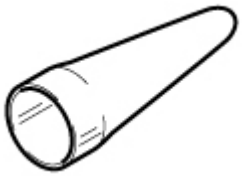
88713.1994	Rocker arm shaft puller	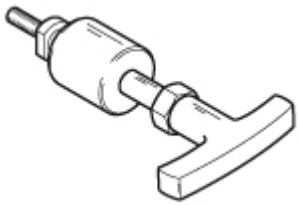
88713.2011	TDC reset tool	
88713.2068	Kit to load the closing rocker arms	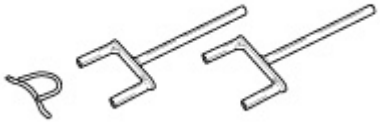
88713.2096	Wrench to block head nuts	

		
88713.2103	Bearing surface for head installation	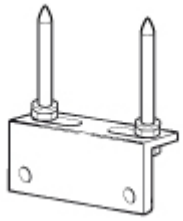
88713.2442	Oil seal driving tool (Ø7)	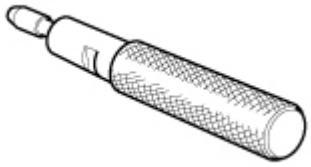
88713.2571	Degree wheel support tool	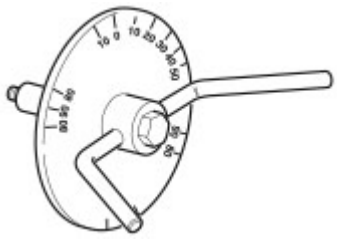
88713.2574	Gauge to check Top Dead Centre (TDC)	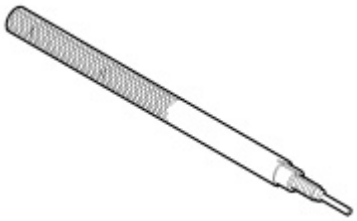
88713.2834	Snap ring installation tool	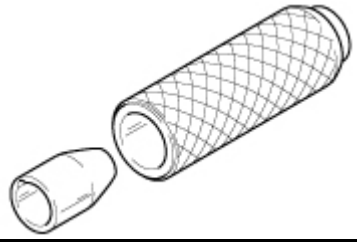
88713.2870	Con-rod guiding tool	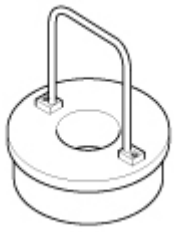
88713.2877	Spark plug wrench	

		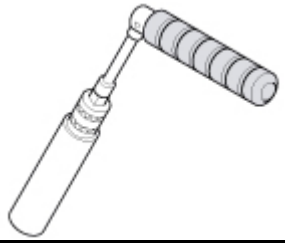
88713.2878	Spacer and fork feeler gauge 0.2/0.3 mm	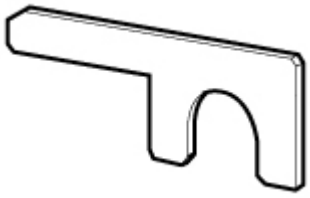
88713.2906	Oil filter wrench	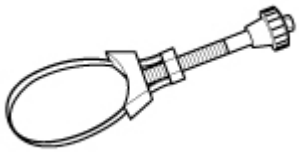
88713.3218	Pulley ring nut locking wrench	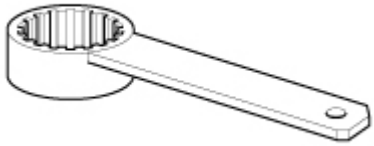
88713.3219	Reaction tool for pulley tightening	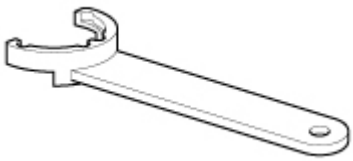
88713.3334	Selector fork positioning plate	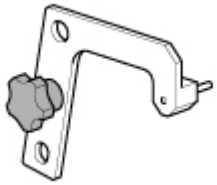
88713.3352	Clutch plate positioning tool	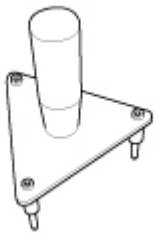
88713.3367	Flywheel wrench	

		
88713.3406	Primary sprocket ring nut wrench	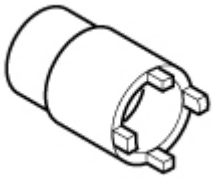
88713.3408	"F" clutch housing reaction tool	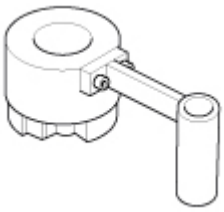
88713.3417	Reaction wrench	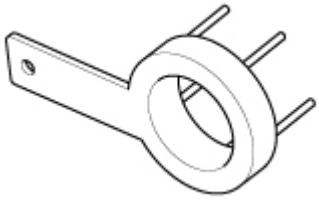
88713.3497	Wrench to tension the belt mobile tensioner	
88713.3520	Crankcase half assembly cap	
88713.3521	Seal ring installation tool	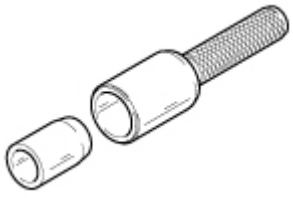
88713.4411	Insert	

		
88765.1000 88765.1005 88765.1006	Fork feeler gauges 0.1 mm Fork feeler gauges 0.2 mm Fork feeler gauges 0.3 mm	
88765.1298	Valve washer gauge	
88765.1518	Valve lift gauge	
88765.1623	Timing pulley positioning tool	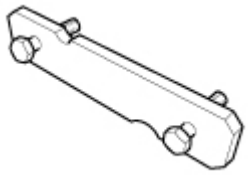

Vehicle pre-delivery

- Transport packaging integrity visual check (where applicable).
- Transport packaging removal (where applicable).
- Motorbike integrity visual check.
- Check of the supplied kit completeness (refer to the parts list supplied together with the kit).
- Rear-view mirror assembly (Refitting the rear-view mirrors).
- Handlebar balancing weight assembly.
- Headlight fairing assembly (Refitting the headlight fairing)
- Passenger seat cover assembly (if requested by the customer) (Assembling the seat)
- Battery start-up (Recharging the battery- Topping up the electrolyte) and fitting on the vehicle (Refitting the battery);
- Final drive correct tensioning check.
- Tyre pressure check (Front 2.3 bar - 2.3 bar with passenger / Rear 2.1 bar - 2.5 bar with passenger).
- Check brake fluid level (Changing the front brake system fluid, Changing the rear brake system fluid) and top up, if necessary.
- Check clutch fluid level (Changing the clutch fluid) and top up, if necessary.
- Check coolant level (Checking the coolant level) and top up, if necessary (Changing the coolant).
- Check engine oil level (Checking the engine oil level) and top up, if necessary (Changing the engine oil and filter cartridge)
- Lights, turn indicators, horn and controls check. Headlight beam height adjustment check. Check handlebar free movement and possible interference.
- Check key operation and steering lock enabling.
- Set time in the instrument panel and check the correct Unit setting according to the country version.
- Check front and rear wheel shaft tightening (Front: 63Nm ± 5% - rear: 230Nm ± 10%).
- Check the brake calliper retaining screws tightening (front: 45Nm ± 5% - rear: 25Nm ± 5%).
- Fuel top-up until the reserve warning light turns off (approx. 2.5 litres).
- Check engine stop switch, side stand switch and clutch lever operation.
- Check the presence of any technical updates and recall campaigns on DCS.
- Check of Software version updates on control unit (use the Global Scan function) and reading of faults with the DDS 2.0.
- Install any Ducati Performance accessories required by Customer's order and check their operation.
- Final test and road test of the motorcycle (test correct operation of safety devices and electric fan).
- Softly clean the motorcycle.
- Motorcycle warranty activation and on-board documentation filling in (General warranty conditions).
- Show the Customer the bike operation and maintenance chart.
- Turn in to Customer the kit documentation and the Service Booklet (appropriately filled in).

Scheduled maintenance chart: operations to be carried out by the customer

List of operations and type of intervention [set mileage (km/mi) or time interval*)	km x1,000	1
	mi. x1,000	0.6
	Months	6
Check engine oil level		•
Check brake and clutch fluid level		•
Check tyre pressure and wear		•
Check the drive chain tension and lubrication		•
Check brake pads		•

* Service operation to be carried out in accordance with the specified distance or time intervals (km, miles or months), whichever occurs first.

Scheduled maintenance chart: operations to be carried out by the dealer

Warning

This scheduled maintenance chart is designed for a road use of the vehicle. If it is used on the track, even if not during sport competitions, all parts of the motorcycle are more stressed so the routine maintenance operations must be carried out more frequently than indicated.

List of operations and type of intervention (set mileage (km/mi) or time interval *)	Km. x1000	1	15	30	45	60	Time (months)
	mi. x1,000	0.6	9	18	27	36	
Reading of the error memory with DDS 2.0 and check of software version update on control units		•	•	•	•	•	12
Check the presence of any technical updates and recall campaigns		•	•	•	•	•	12
Change engine oil and filter		•	•	•	•	•	12
Clean the engine oil mesh filter assembly		•					-
Check and/or adjust valve clearance				•		•	-
Change timing belts				•		•	60
Change spark plugs				•		•	-
Clean air filter			•		•		-
Change air filter				•		•	-
Change brake and clutch fluid							36
Check brake disc and pad wear: replace, if necessary		•	•	•	•	•	12
Check front and rear brake calliper screw and front brake disc screw tightening		•	•	•	•	•	12
Checking the tightening of the rear brake disc screws and of the phonic wheel (with rear wheel shaft removal)			•	•	•	•	
Check front and rear wheel nuts tightening		•	•	•	•	•	12
Check frame-to-engine fasteners tightening			•	•	•	•	-
Check wheel hub bearings				•		•	-
Check and lubricate the rear wheel shaft				•		•	-
Check the cush drive damper on rear sprocket				•		•	-
Check the proper tightening of final drive front and rear sprocket nuts		•	•	•	•	•	12
Check final drive (chain, front and rear sprocket) and sliding shoe wear			•	•	•	•	12
Check final drive chain tension and lubrication		•	•	•	•	•	12
Check steering bearings and lubricate, if necessary				•		•	-
Change front fork fluid				•		•	-
Visually check the front fork and rear shock absorber seals		•	•	•	•	•	12

Check the freedom of movement and tightening of the side stand	•	•	•	•	•	12
Visually check the fuel lines		•	•	•	•	12
Check rubbing points, clearance, freedom of movement and positioning of hoses and electric wiring in view	•	•	•	•	•	12
Lubricate the levers at the handlebar and pedal controls		•	•	•	•	12
Change coolant				•		48
Visually check the coolant level and sealing of the circuit	•	•	•	•	•	12
Check tyre pressure and wear	•	•	•	•	•	12
Check the battery charge level	•	•	•	•	•	12
Check the operation of all electric safety devices (side stand sensor, front and rear brake switches, engine kill switch, gear/neutral sensor)	•	•	•	•	•	12
Check lighting, turn indicators, horn and controls	•	•	•	•	•	12
Reset the Service indication through the DDS 2.0	•	•	•	•	•	-
Final test and road test of the motorcycle, testing safety devices (ex. ABS and DTC), electric fans and idling	•	•	•	•	•	12
Softly clean the motorcycle	•	•	•	•	•	12
Fill out that the service was performed in on-board documentation (Service Booklet)	•	•	•	•	•	12

Checking the tightening of the rear brake disc screws and of the phonic wheel (with rear wheel shaft removal)

Procedure to check the tightening of the rear brake disc screws and of the phonic wheel (with rear wheel shaft removal)

Use suitable instruments to lift the rear side of the vehicle from the subframe while respecting the safety rules.
Remove clip (1) and loosen nut (2) to remove the rear wheel.
Then remove washer (3) and spacer (4).

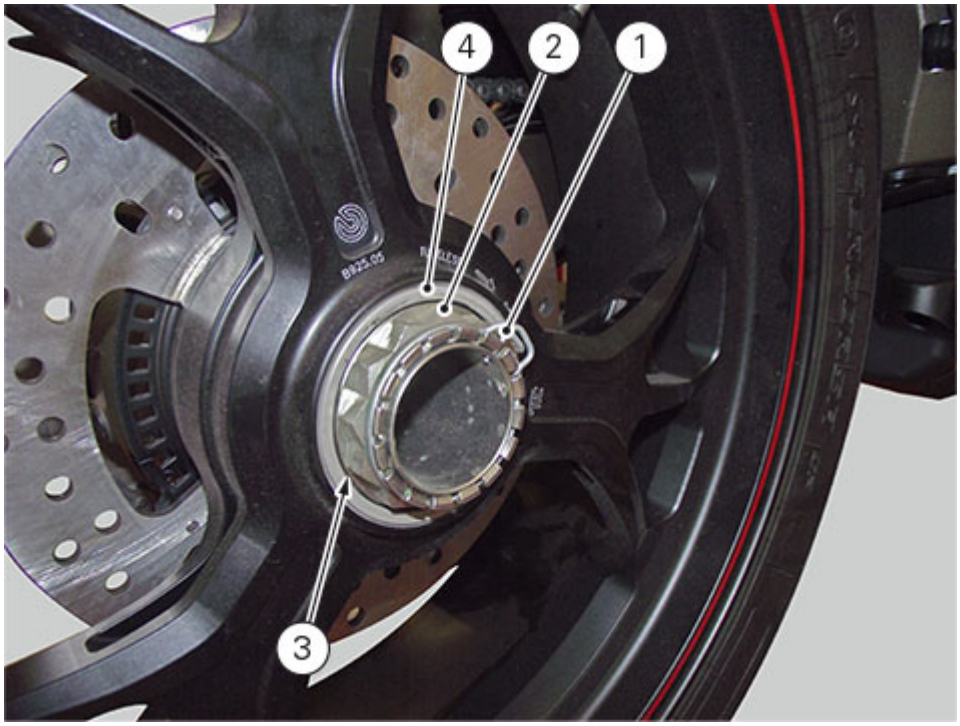

Note
It is necessary to remove the silencer in order to remove the rear wheel.

Loosen screw (5) securing eccentric hub to swinging arm, then slacken final drive chain.

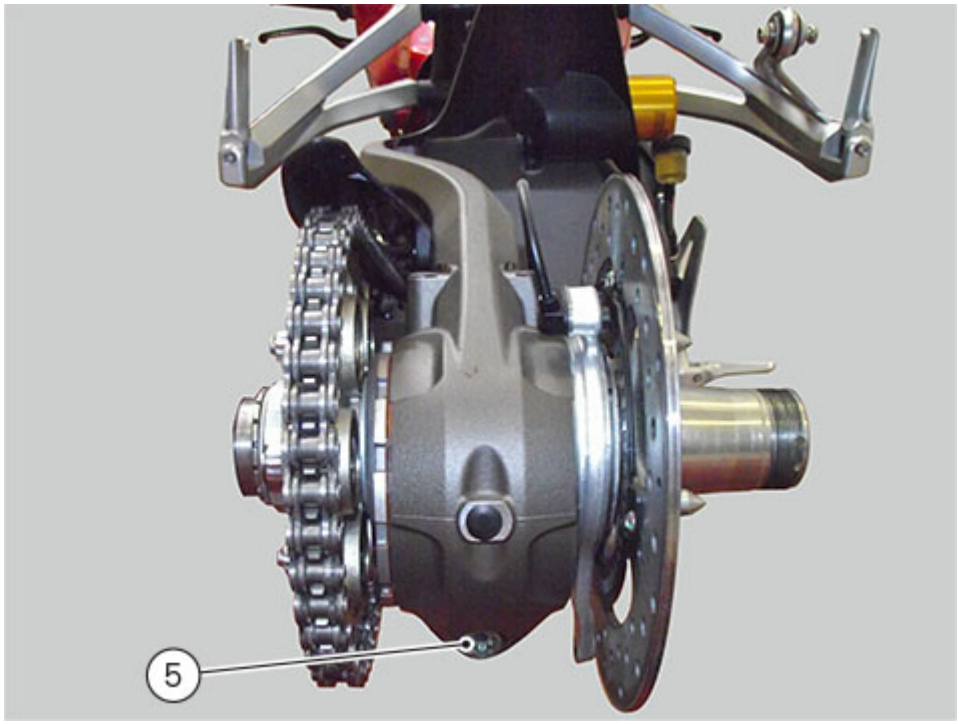

Remove clip (7) and loosen nut (8) to remove the final drive rear sprocket assembly.
Remove the washer (6).

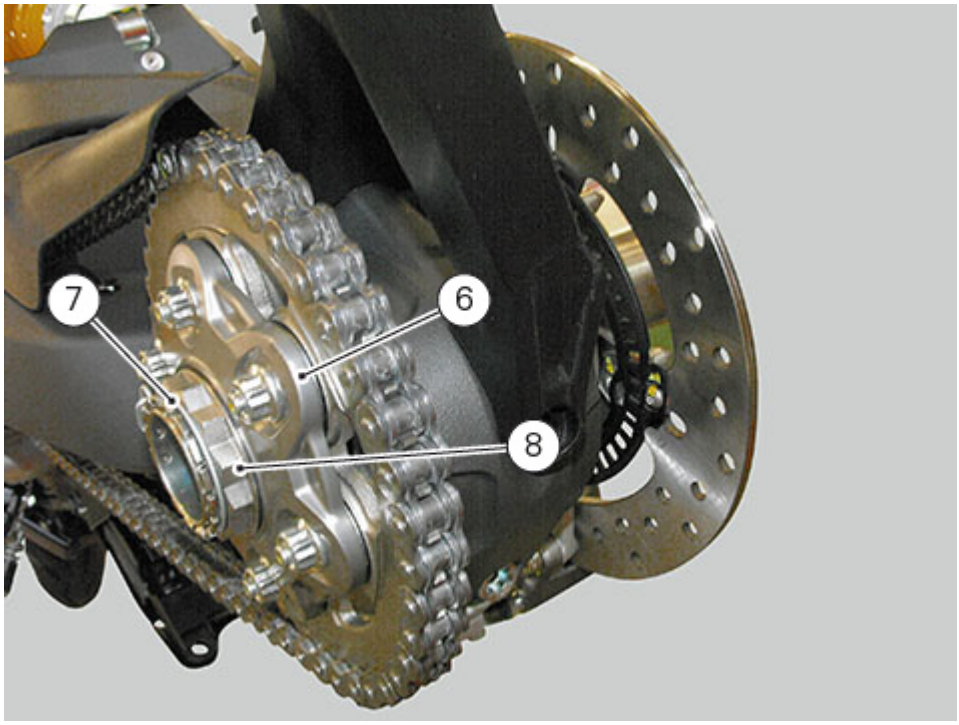

Remove the two screws (9) that retain the brake calliper to the rear disc.

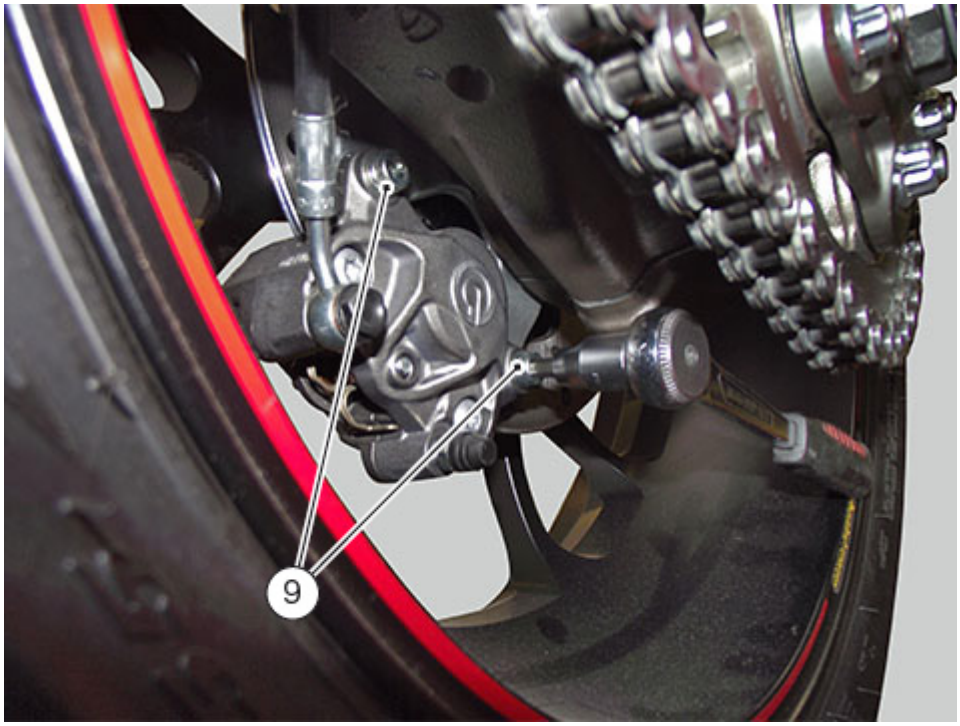

Slide out the rear wheel shaft assembly (10) with brake disc.

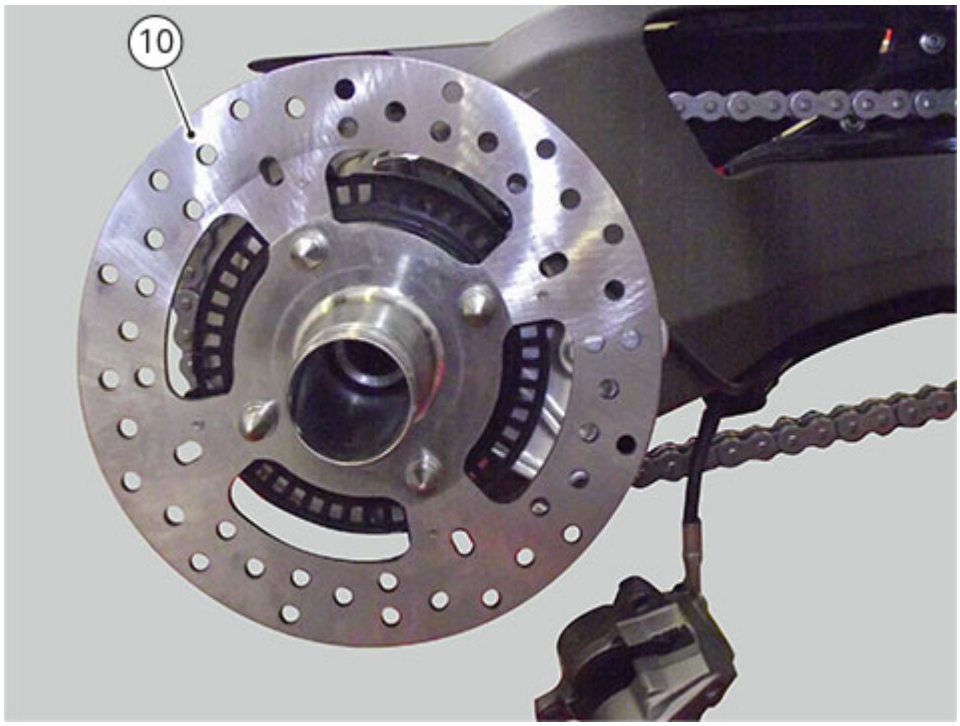

Procedure to check the tightening of the rear brake disc and phonic wheel retaining screws

Fix the rear wheel shaft in a vice paying utmost attention not to damage it.
Visually check the presence of certification marks (A) on all screws (11) that retain the brake disc and on the four retaining screws (12) of the phonic wheel. Should the certification marks not be clear or misaligned, clean the surfaces and apply the certification marks with an indelible felt-tip pen.



Tighten the four retaining screws (11) of the rear brake disc (13) to a torque of 30 Nm - **THIS TIGHTENING TORQUE IS DIFFERENT FROM THE NOMINAL ONE AND MUST BE APPLIED EXCLUSIVELY FOR THIS CHECK**.

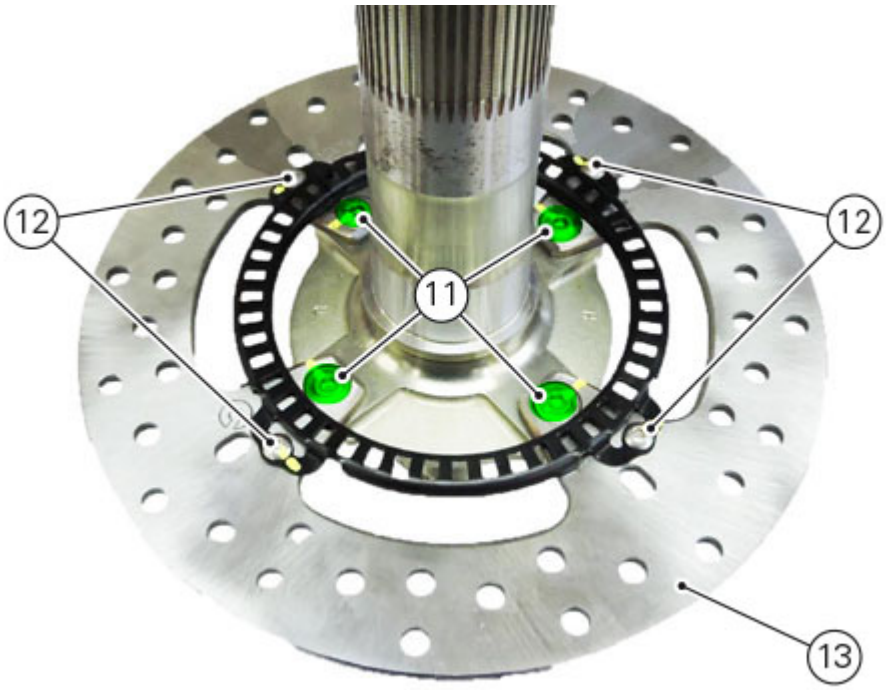

Check that the 4 screws (11) have not rotated with respect to the certification marks.

— If the checked screw has not rotated, no other operation will be required.



— If the checked screw has rotated, it will be necessary to proceed as follows:

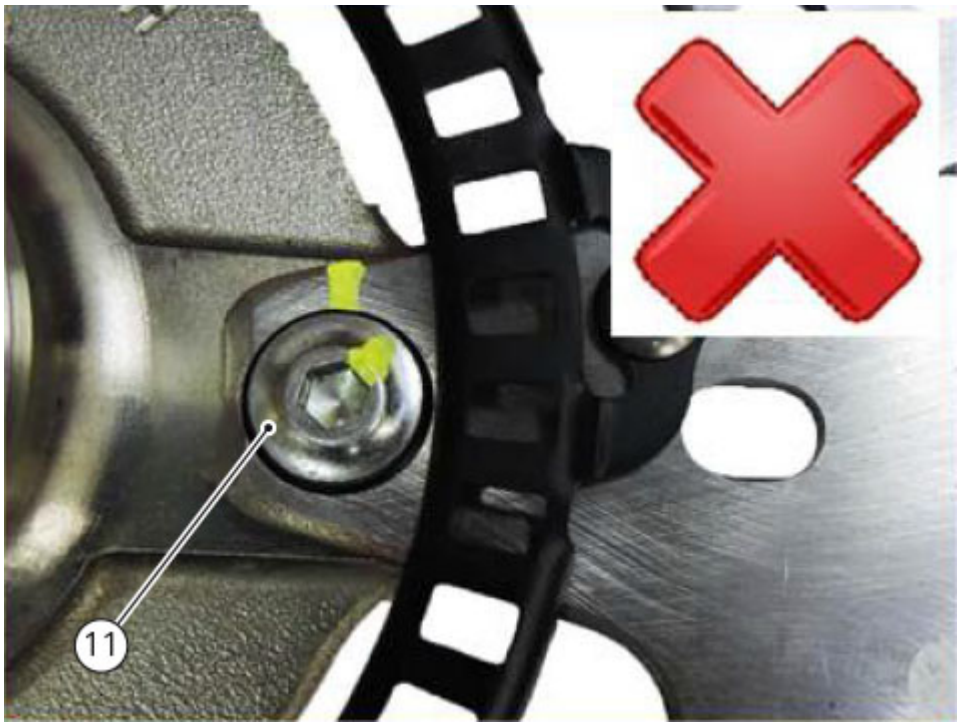

Remove the screw (11) that has rotated and erase the previous certification marks both from the screw and the disc.
Thoroughly remove the previously applied threadlocker from the screw and female screw thread using a mechanical brush and the solvent-based cleaner LOCTITE SF 7063 following the relevant use instructions.
Apply the specified product to the screw thread.





Tighten the checked screw (11) to a torque of 25Nm.

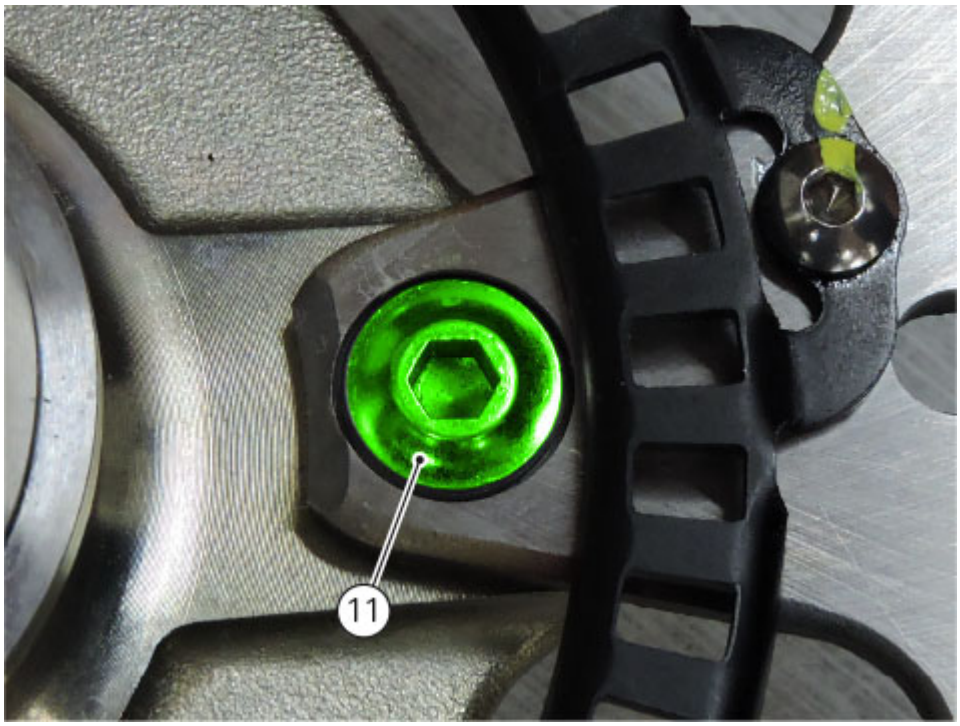

Certify the checked screw (11) and the disc with an indelible felt-tip pen.

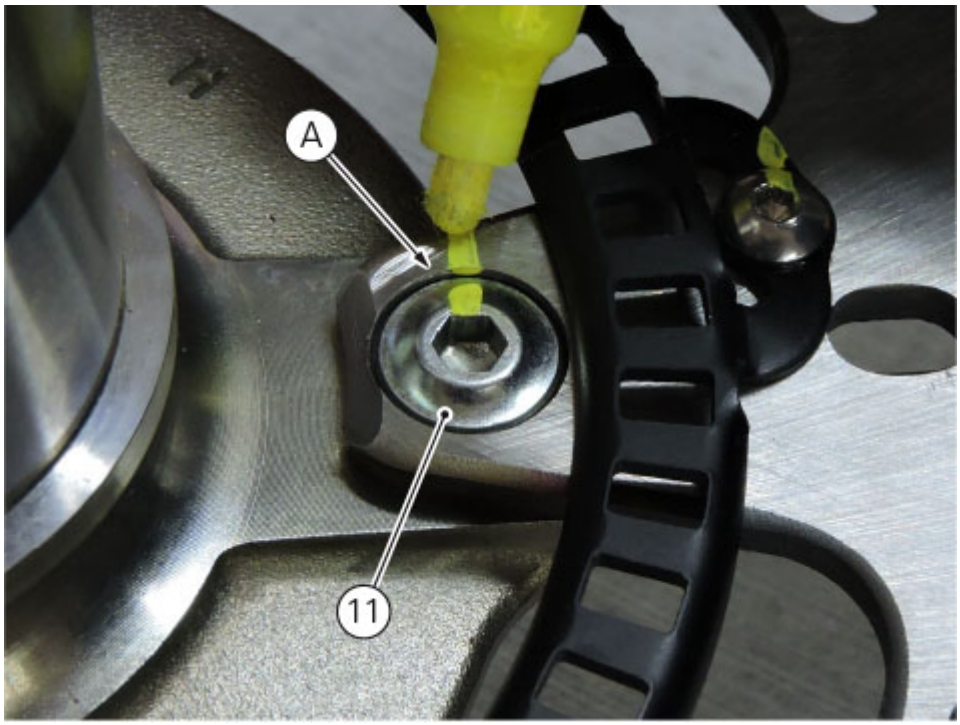

Tighten the 4 retaining screws (12) of the rear phonic wheel (14) to a torque of 6 Nm - **THIS TIGHTENING TORQUE IS DIFFERENT FROM THE NOMINAL ONE AND MUST BE APPLIED EXCLUSIVELY FOR THIS CHECK**.

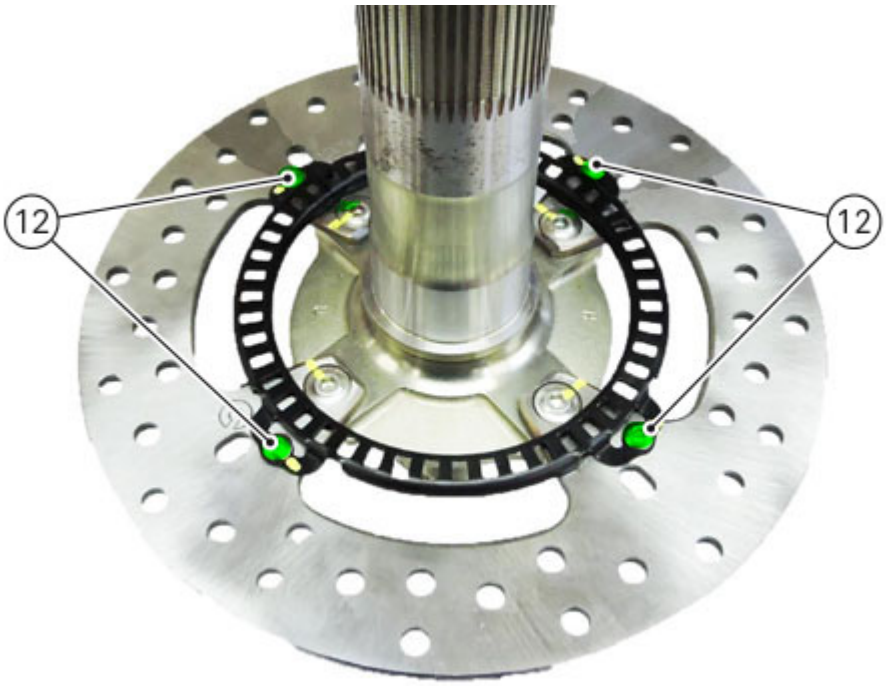

Check that the 4 screws (12) have not rotated with respect to the certification marks.
— If the checked screw (12) has not rotated, no other operation will be required.



— If the checked screw (12) has rotated, it will be necessary to proceed as follows:



Remove the screw (12) that has rotated and erase the previous certification marks both from the screw and the phonic wheel.
Thoroughly remove the previously applied threadlocker from the screw (12) and female screw thread using a mechanical brush and the solvent-based cleaner LOCTITE SF 7063 following the relevant use instructions.
Apply the specified product to screw (12) thread.





Tighten the screw (12) to a torque of 5Nm.

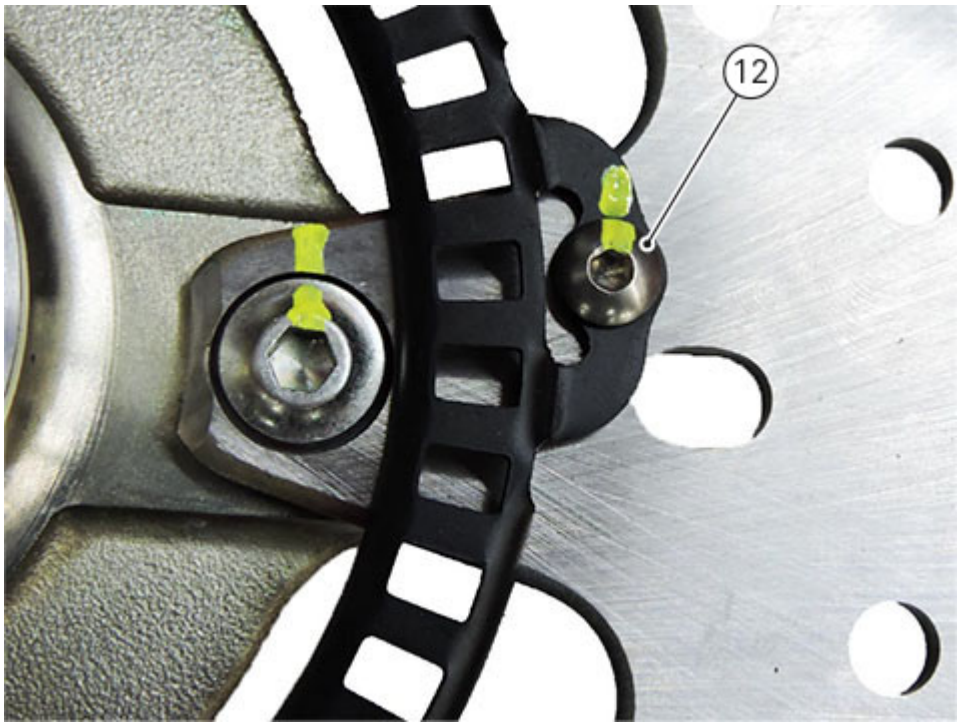

Certify (A) the screw (12) and the phonic wheel (14) with an indelible felt-tip pen.



Check the eccentric hub bearings.

Checking the eccentric hub bearings

A — Left Side
The bearing on the left side **requires scheduled maintenance** (cleaning and greasing).

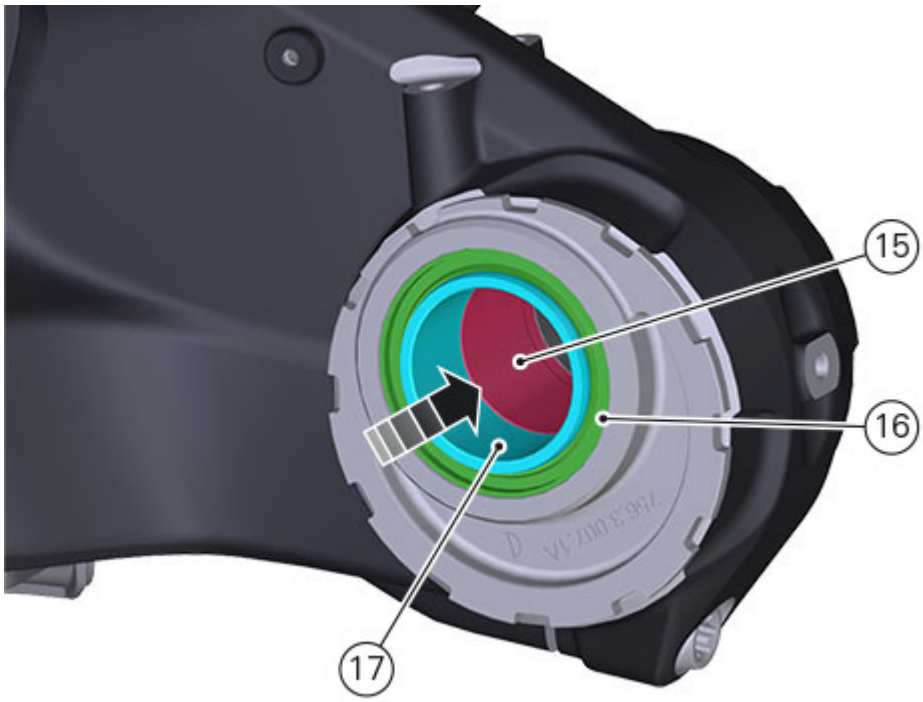

Prior to removal, verify the conditions of the components by checking that:
— the internal bushing (15) rotates without generating uncommon noise;
— the internal bushing (15) rotates freely (for example without any friction or hard spots);
— the internal bushing (15) does not feature radial play values different from those of the new component;
— the rubber protection seal (16) is in good conditions.

Slide out the internal bushing (15) from the bearing (17).

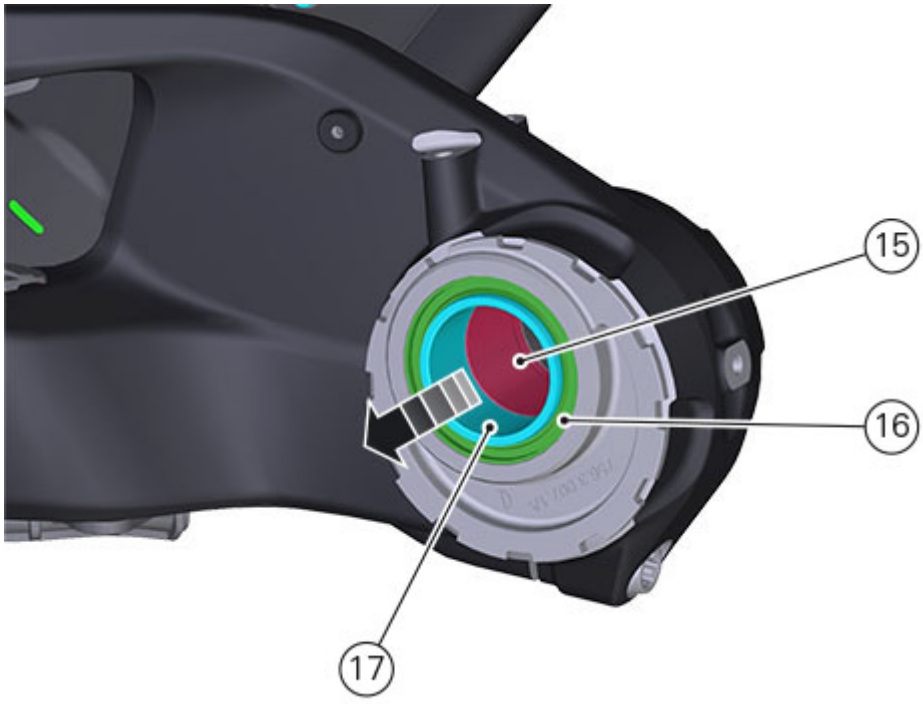

Clean the bearing rollers by mechanically removing the grease with a dry cloth that does not leave any residues (do NOT use paper). Do NOT use aggressive solvents or agents that could damage the bearing rubber seal lips. Do NOT use compressed air to clean the area.

Check the status of the roller surfaces.
Should you find any non-conformity on the component, replace it (as spare part, the eccentric hub assembly is supplied).
Apply SKF LGWA 2 grease on the bearing rollers using a plastic spatula.
Apply at least 5 grams of product on the internal surface of the bearing.



Note
As an alternative it is possible to use the SKF VKG1 grease.

Thoroughly clean bushing (15) and clean the surface status: the surfaces must be free of scores or abnormal wear signs.
Should you find any non-conformity on the component, replace it (as spare part, the single bushing is supplied).
Refit bushing (15) in its seat (17).

B — Right Side
The bearing on the right side **does NOT require scheduled maintenance** since it already contains the right quantity of grease for a correct operation.



Verify the bearing conditions by checking that:
— the inner races rotate without generating uncommon noise;
— the inner races rotate freely (for example without any friction or hard spots);
— the races do not feature excessive axial and radial play values different from those of the new component;
— the rubber protection seal is in good conditions.

The bearing and the area around it can be cleaned using a dry cloth that does not leave any residues. Do NOT use compressed air or aggressive solvents/agents that could damage the rubber seals. Should you find any non-conformity on the component, replace it (as spare part, the eccentric hub assembly is supplied).

Proceed as described in points (A) and (B), grease the surface (highlighted in the figure) of the rear wheel shaft (10) with a suitable quantity of specified product to facilitate the hub installation.

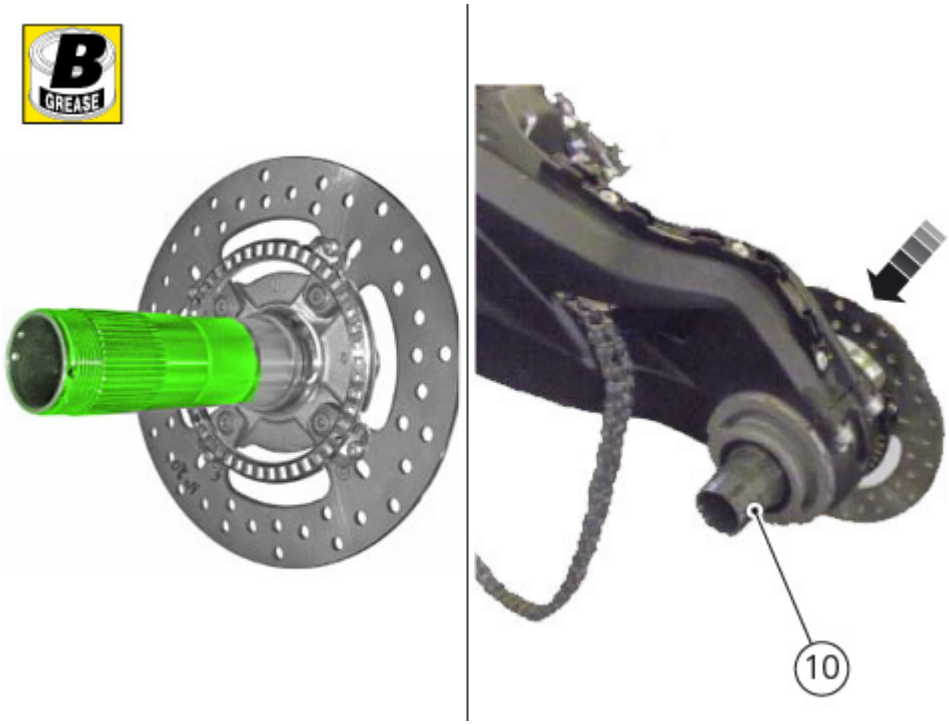

Refit the final drive rear sprocket assembly: fit washer (6) and start nut (8) with thread greased using the specified product.

Tighten nut (8) to a torque of 230Nm and fit clip (7).

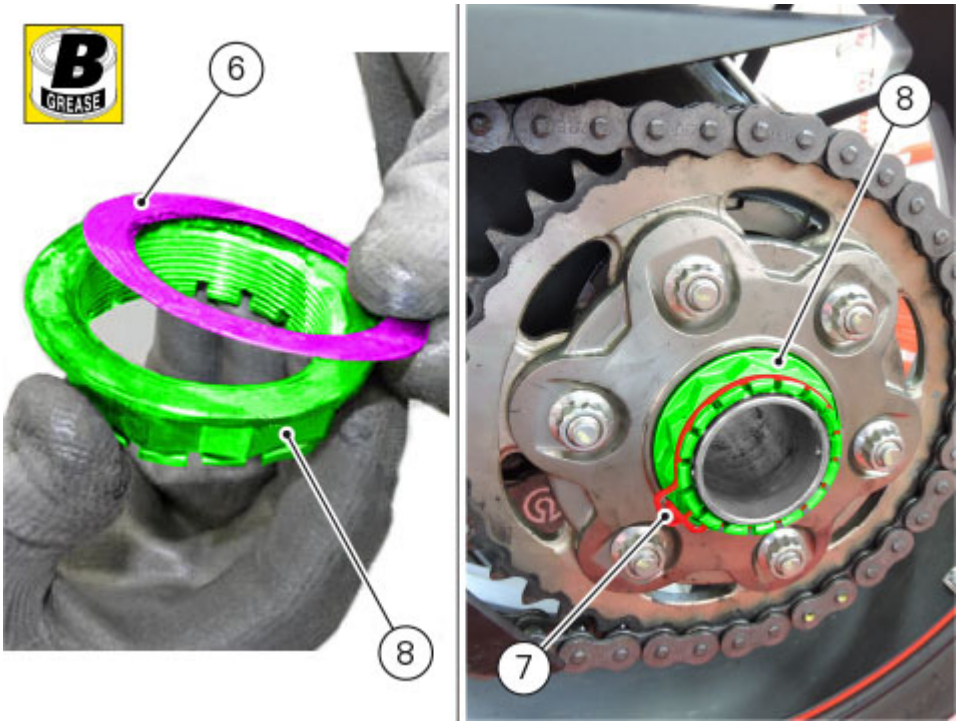

Grease the two screws (9) (M8x1.25) that retain the rear brake calliper with the specified product and tighten them to a torque 25 Nm ± 5%.

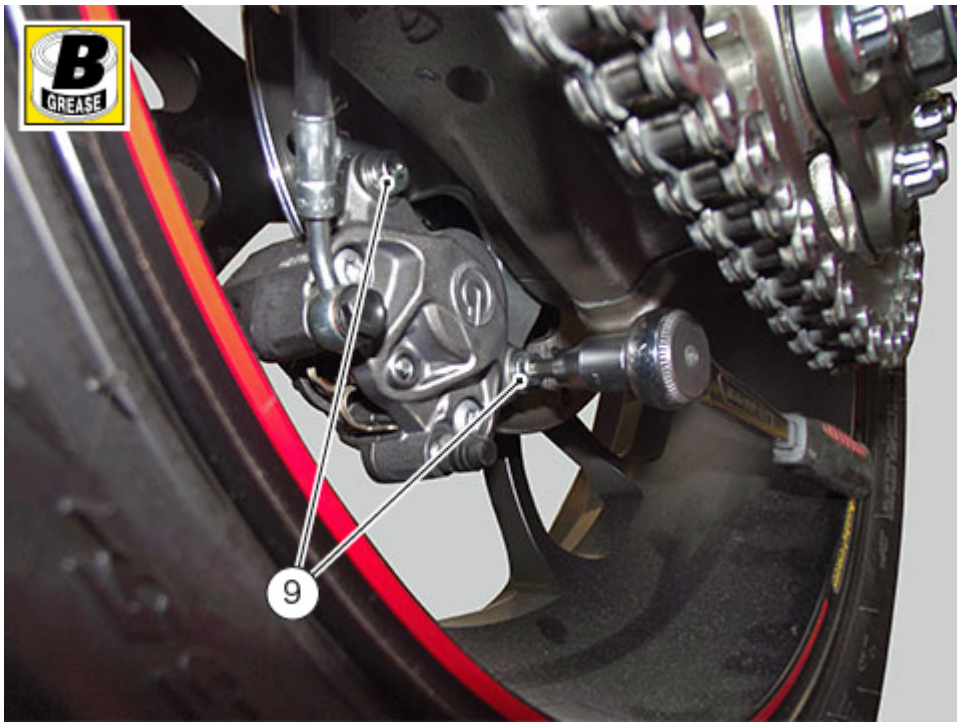

Pull the rear brake master cylinder lever until the brake pads touch the brake disc.

Fit the rear wheel: fit spacer (4) and washer (3) on the wheel shaft.
Apply the specified product on the nut thread (2) and start it on the wheel shaft thread.

Tighten nut (13) to a torque of 230Nm and fit clip (1).

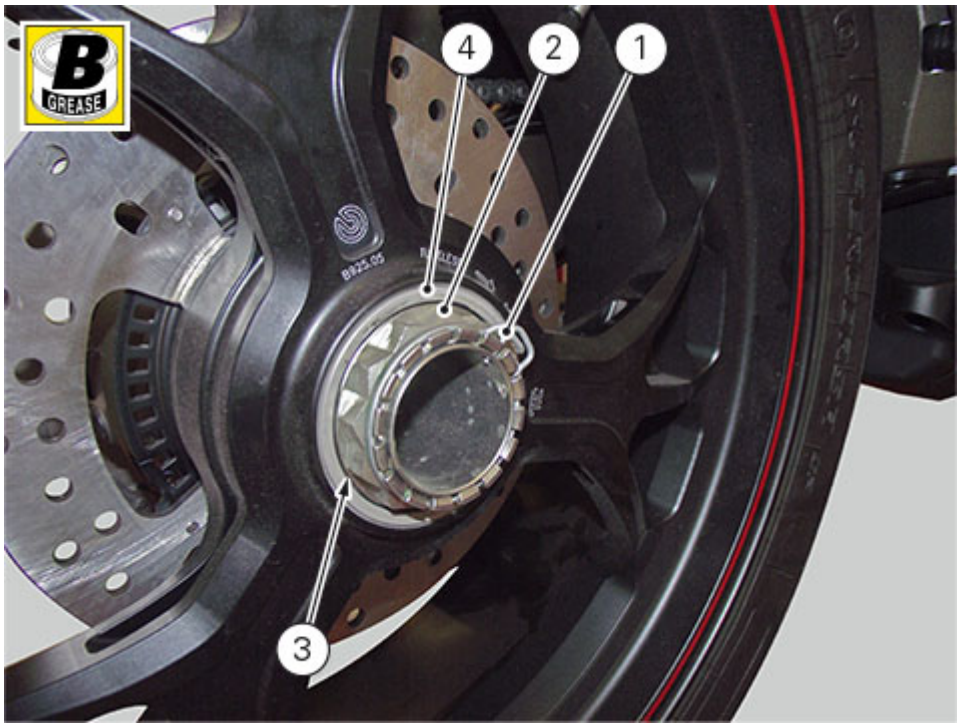

Place the bike on the side stand and tension the final drive chain by referring to the indication on the swinging arm.
Then tighten screw (5) (M14x1.5) securing eccentric hub to swinging arm, previously greased with the indicated product to a torque of 40Nm±5%.

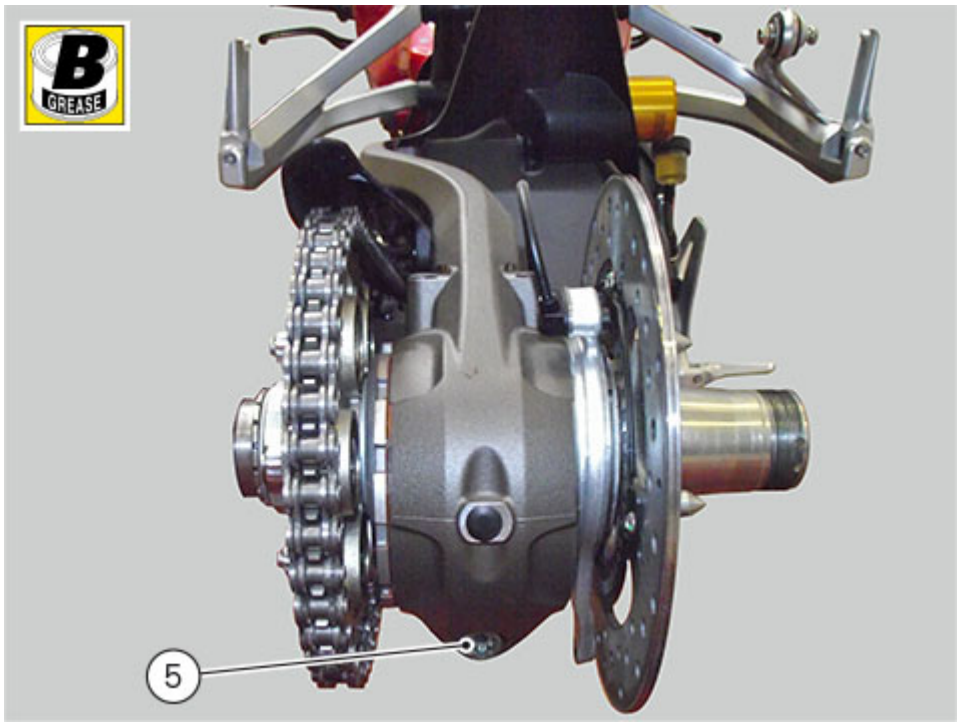
B
GREASE
5

Adjusting the steering damper

The steering damper is located before the handlebar and is secured to the steering head.
It provides stable and accurate steering, improving the motorcycle's handling response under any conditions.
Turn knob (1) clockwise for harder steering, and counter clockwise for softer steering. Each position corresponds to a click.



SELECTING STEERING DAMPER SETTING
Ducati recommends steering damper settings as specified in the table.
The indicated settings are mere suggestions since they depend on riding conditions as well as on the rider's skills and needs in terms of comfort.
The values in the table are indicative. They have been calculated considering a dressed rider weighing 80–90 kg and a dressed passenger weighing 70–80 kg.

Steering damper adjustments
STANDARD: 6-7 clicks;
SPORT: 5 clicks;
COMFORT: 8-12 clicks.

Warning
Very high hydraulic damping (below 5 clicks) could make steering too hard for low-speed manoeuvres.
Never try to change adjuster knob position while riding as this could lead to loss of control of the motorcycle.
Check adjusting knob proper position any time you start the vehicle.

Adjusting the rear shock absorber

Rear shock absorber adjusters
The rear shock absorber has external adjusters that enable you to adjust the setting to suit the load on the motorcycle.
Knob (1) located on the expansion reservoir adjusts the damping during the compression phase.
Knob (3) located on the upper connection holding the shock absorber to the engine, adjusts the damping during the rebound phase (return).

Turn knob (1) clockwise to stiffen the damping, or counter clockwise to soften it.
Turn knob (3) counter clockwise to stiffen the damping, or counter clockwise to soften it.
The two ring nuts (2), located in the shock absorber lower side, adjust the external spring preload.
To change spring preload, slacken the lower locking ring nut.
Then TIGHTEN or SLACKEN the upper ring nut to INCREASE or DECREASE spring preload.
After setting spring preload as desired, tighten the lower locking ring nut.

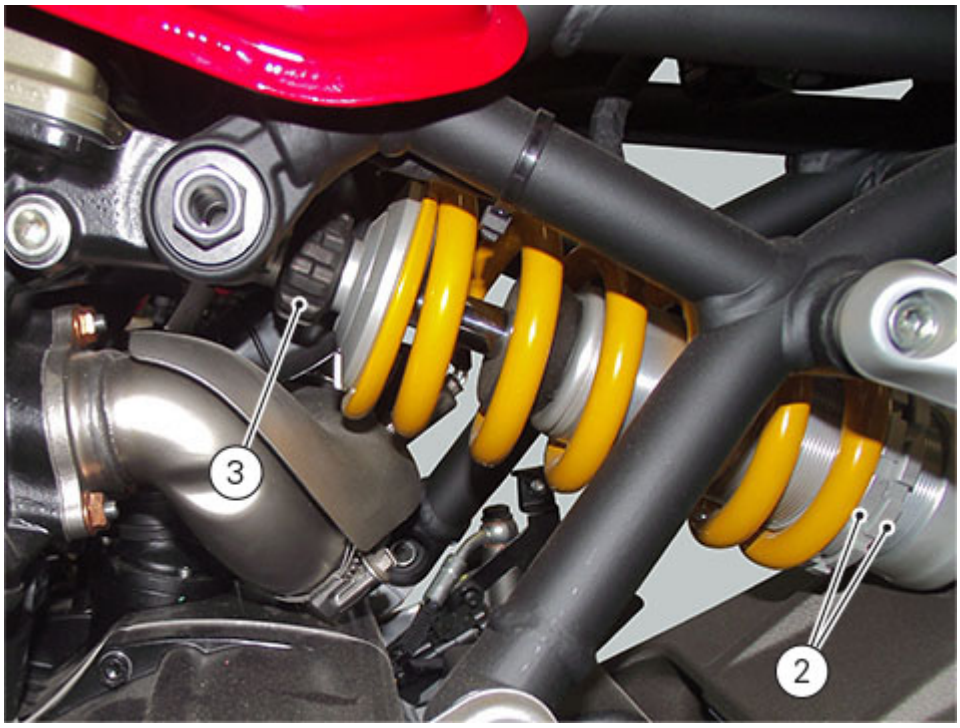

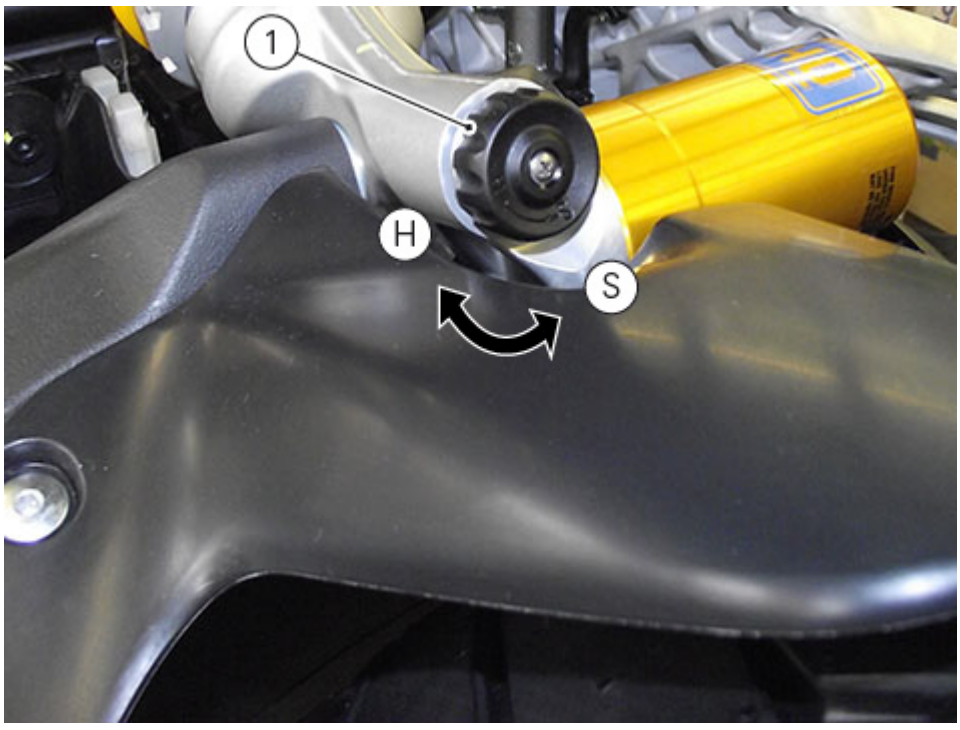

STANDARD setting
From fully closed (clockwise):

- rebound: loosen adjuster (3) by 16 clicks (from fully closed position);
- compression: loosen adjuster (1) by 14 clicks (from fully closed position);
- spring preload: 12 mm (fitted spring length = 158 mm).

Warning
To turn the preload adjuster ring nut use a pin wrench. Pay attention to avoid hand injuries by hitting motorcycle parts in case the wrench tooth suddenly slips on the ring nut groove while moving it.

Warning
The shock absorber is filled with gas under pressure and may cause severe damage if taken apart by unskilled persons.

SETTING THE SUSPENSIONS
Ducati recommends rear suspension settings as specified in the table.
The indicated settings are mere suggestions since they depend on riding conditions as well as on the rider's skills and needs in terms of comfort.

The values in the table are indicative. They have been calculated considering a dressed rider weighing 80–90 kg and a dressed passenger weighing 70–80 kg.

Adjustment range
- compression: 0 ÷ 21 clicks;
- rebound: 0 ÷ 39 clicks;
- preload: 4÷16 mm.

"Standard" adjustments

- compression: 14 clicks (from fully closed position);
- rebound: 16 clicks (from fully closed position);
- preload: 12 mm (from fully uncompressed).

"Sport" adjustments

- compression: 8 clicks (from fully closed position);
- rebound: 12 clicks (from fully closed position);
- preload: 16 mm (from fully uncompressed).

"Comfort" adjustments

- compression: 20 clicks (from fully closed position);
- rebound: 16 clicks (from fully closed position);
- preload: 12 mm (from fully uncompressed).

"Rider+Passenger" adjustments

- compression: 10 clicks (from fully closed position);
- rebound: 14 clicks (from fully closed position);
- preload: 16 mm (from fully uncompressed).

After setting spring preload as desired, tighten the upper locking ring nut.

Standard settings of the vehicle as delivered (factory settings specified in the previous paragraphs) correspond to a calibration which considers all use conditions (riding conditions, rider's skills and needs), and is the best solution for a sport use of the motorcycle on the road.

Adjusting the front fork

Front fork adjusters
The front fork used on this motorcycle has rebound (return), compression and spring preload adjustment.
It is possible to adjust the spring preload on both legs whereas compression and rebound can only be adjusted on the LH and RH legs, respectively.

This adjustment is done using the outer screw adjusters:
(1) for rebound damping;
(2) for inner spring preload adjustment;
(3) for compression damping.

Put the motorcycle on the side stand and make sure it is stable.
Turn adjuster (1) at the top end of the RH fork leg with a suitable hexagon wrench to adjust rebound damping.
Turn adjuster (3) at the top end of the LH fork leg with a suitable hexagon wrench to adjust compression damping.
By turning adjuster screws (1) and (3) you will hear some clicks; each click corresponds to a damping setting.



The stiffest damping setting is obtained with the adjuster turned fully clockwise to the "0" position.
By turning counter clockwise starting from this position, count the clicks that will correspond to positions "1", "2" etc.

STANDARD settings are as follows:
– compression: 10 clicks (from fully closed position);
– rebound: 12 clicks (from fully closed position);
– spring preload: 6 turns (from fully uncompressed).

To change preload of the spring inside each fork leg, turn adjuster (2) fully counter clockwise with a 17 mm hexagon wrench, to obtain fully uncompressed position.
From this position, adjust the spring preload by turning the adjuster clockwise.
Every turn corresponds to 1 mm of spring preload.

Warning
Adjust both fork leg spring preload adjusters to same settings.

SETTING THE SUSPENSIONS
Ducati recommends front fork settings as specified in the table: the indicated settings are mere suggestions since they depend on riding conditions as well as on the rider's skills and needs in terms of comfort.
The values in the table are indicative. They have been calculated considering a dressed rider weighing 80–90 kg and a dressed passenger weighing 70–80 kg.

Adjustment range
- compression: 0 ÷ 26 clicks;
- rebound: 0 ÷ 26 clicks;
- preload: 0÷14 turns.

"Standard" adjustments

- compression: 10 clicks (from fully closed position);
- rebound: 12 clicks (from fully closed position);
- Spring preload: 6 turns (from fully uncompressed).

"Sport" adjustments

- compression: 6 clicks (from fully closed position);
- rebound: 8 clicks (from fully closed position);
- Spring preload: 4 turns (from fully uncompressed).

"Comfort" adjustments

- compression: 25 clicks (from fully closed position);
- rebound: 25 clicks (from fully closed position);
- Spring preload: 6 turns (from fully uncompressed).

"Rider+Passenger" adjustments

- compression: 8 clicks (from fully closed position);
- rebound: 14 clicks (from fully closed position);
- Spring preload: 8 turns (from fully uncompressed).

Adjusting the position of the gearchange pedal and rear brake pedal

GEAR CHANGE PEDAL

The position of the gear change and rear brake pedals in relation to the footpegs can be adjusted to suit the preferred riding position.
To adjust the position of the gearchange pedal, proceed as follows:
Loosen the retaining nuts (1).
Lever (2) can be shortened or lengthened, thus gear change pedal (3) can be raised or lowered by turning the flat (A).
In particular:
- screw lever (2) (clockwise) to raise gearchange lever (3);
- loosen lever (2) (counter clockwise) to lower gearchange lever (3).

Once all adjustment operations are completed, screw retaining nuts (1) and tighten them to a torque of 5Nm ± 10%.

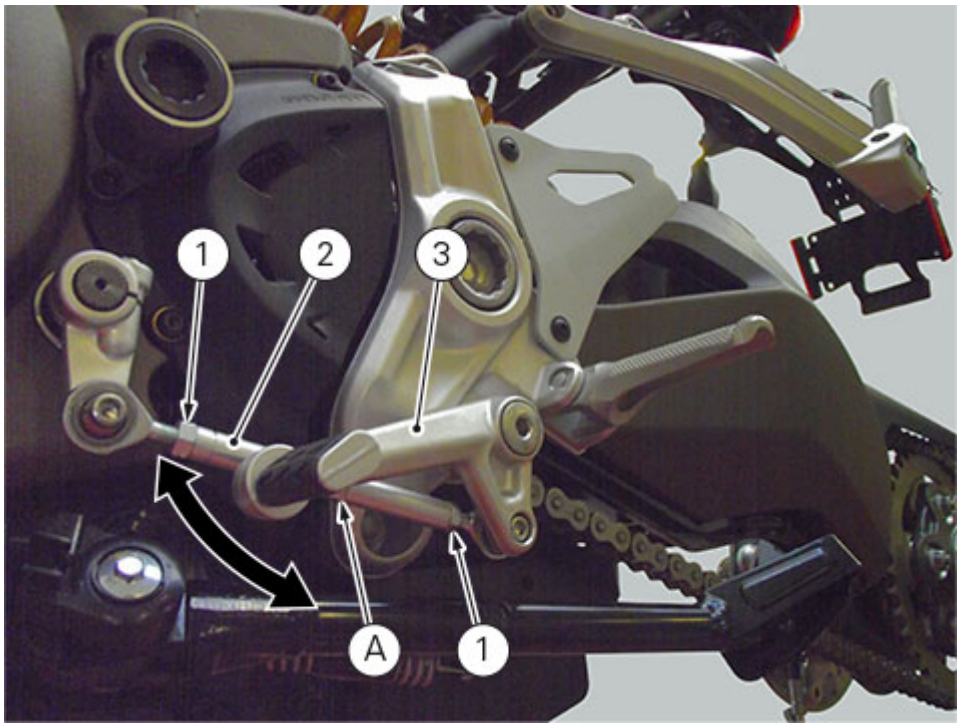

REAR BRAKE LEVER PEDAL
To adjust the position of the rear brake pedal, proceed as follows.
Slide out the elastic retainer (5).
Loosen lock nut (4).

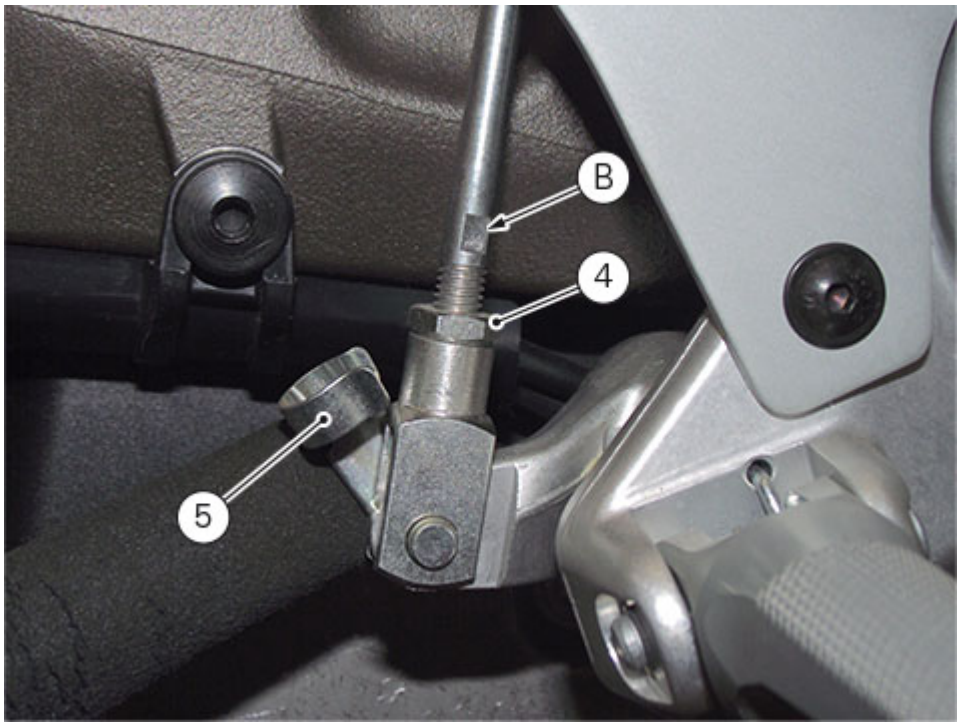

Adjust rear brake pedal angle (6) by turning the flat (B).
In particular:
- screw rod (clockwise) to lower pedal;
- loosen rod (clockwise) to raise pedal.
Operate the pedal by hand to check that there is 1.5 to 2 mm of free play before the brake bites.
If not, adjust the length of the master cylinder pushrod.
Tighten the check nut (4) to a torque of 7.5Nm ±10%, and check play again.

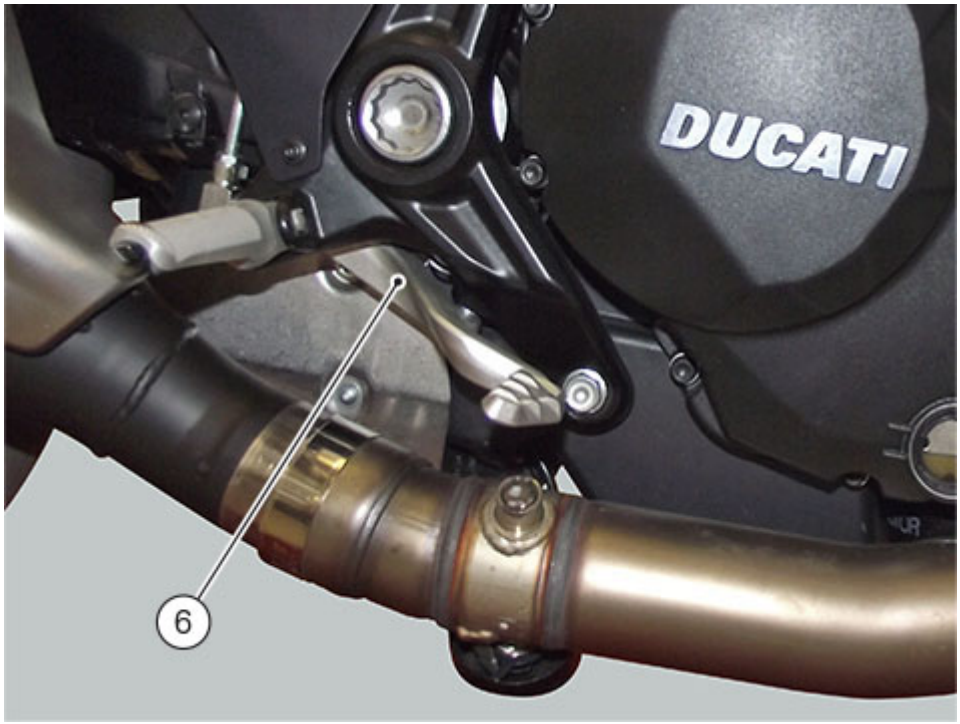

Check for rear brake lever (6) correct operation on sensor, by turning adjuster (7) after having loosened the retaining nut (8).

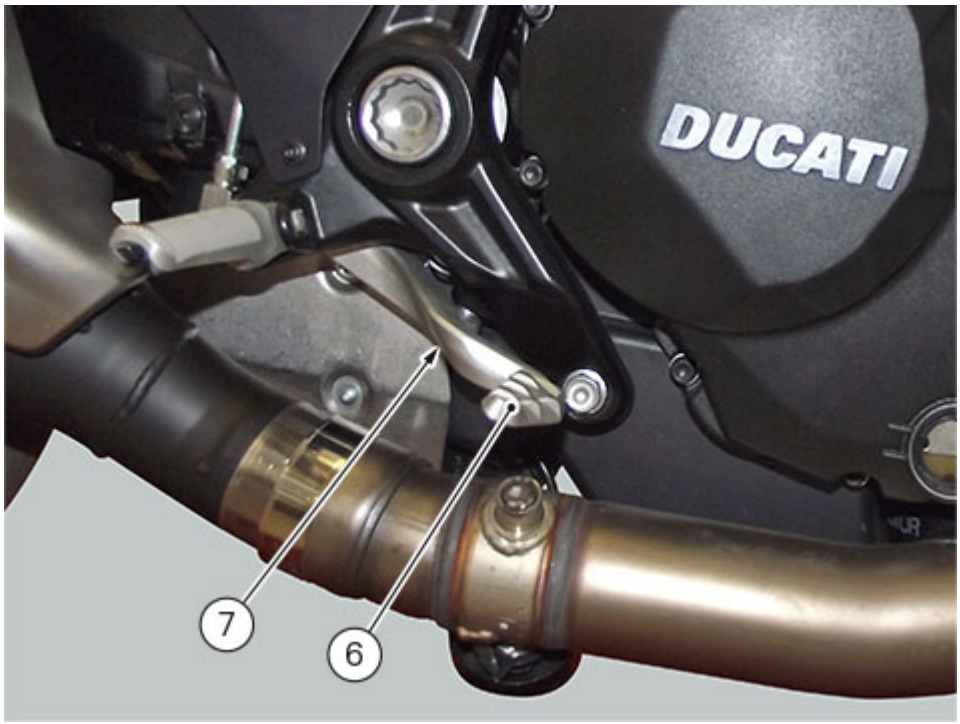

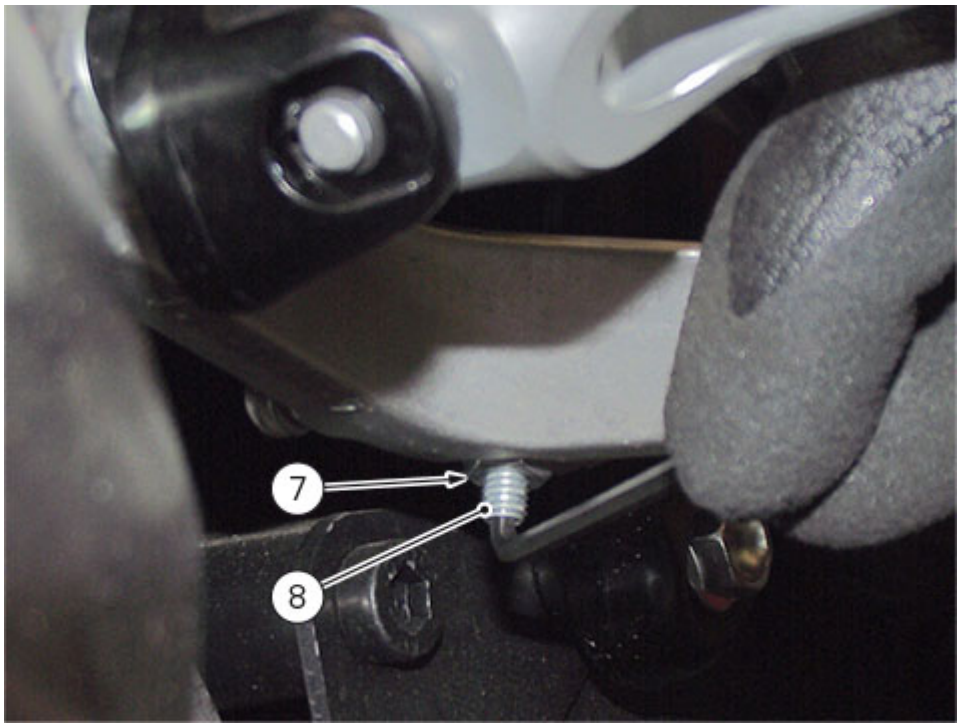

Once the adjustment is completed, tighten nut (8) to a torque of 8Nm±10%.

Adjusting the clutch lever and front brake lever

Lever (1) disengages the clutch. It features a dial adjuster (3) for lever distance from the twistgrip on handlebar.
The lever distance can be adjusted through 10 clicks of the dial (3): turn clockwise to increase lever (1) distance from the twistgrip.
Turn the adjuster (3) counter clockwise to decrease lever (1) distance.
When the clutch lever (1) is operated, drive from the engine to the gearbox and the drive wheel is disengaged.
Using the clutch properly is essential to smooth riding, especially when moving OFF.

Warning
Set clutch lever when motorcycle is stopped.



The same adjustment can be made also for front brake control (2), turning dial (4).

Warning
Set front brake lever when motorcycle is stopped.

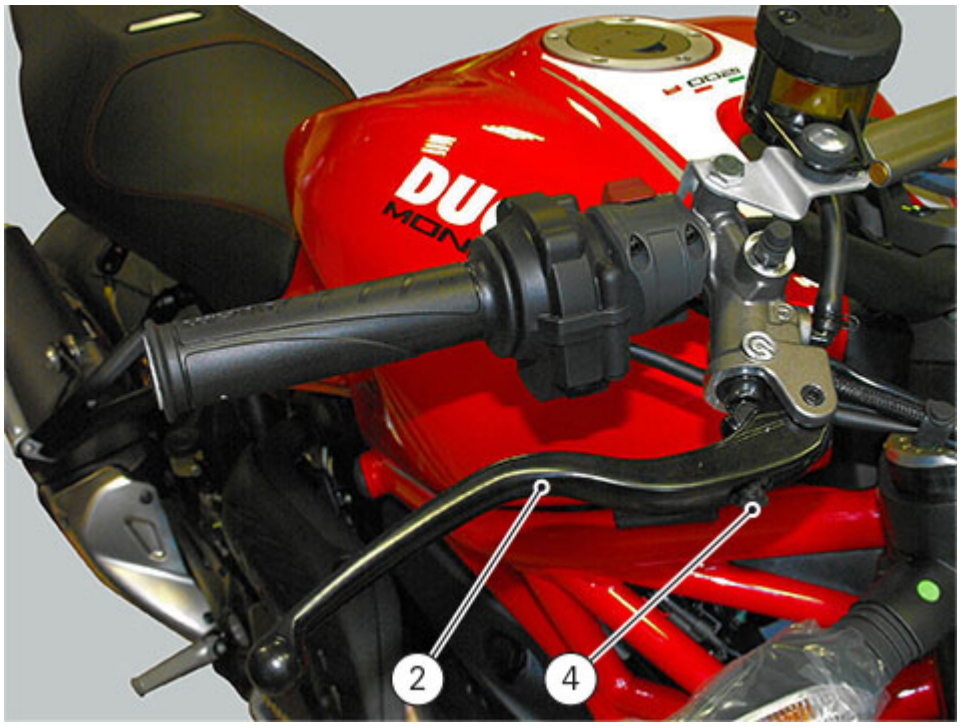

Checking rear brake pad wear and replacing brake pads

Warning
Brake fluid is corrosive and will damage paint. Avoid contact with eyes and skin. In case of accidental contact, wash thoroughly with water.

Check brake pads wear through the inspection hole in the callipers.
Change both pads if friction material thickness of even just one pad is about 1 mm.

Warning
Friction material wear beyond this limit would lead to metal support contact with the brake disc thus compromising braking efficiency, disc integrity and rider safety.

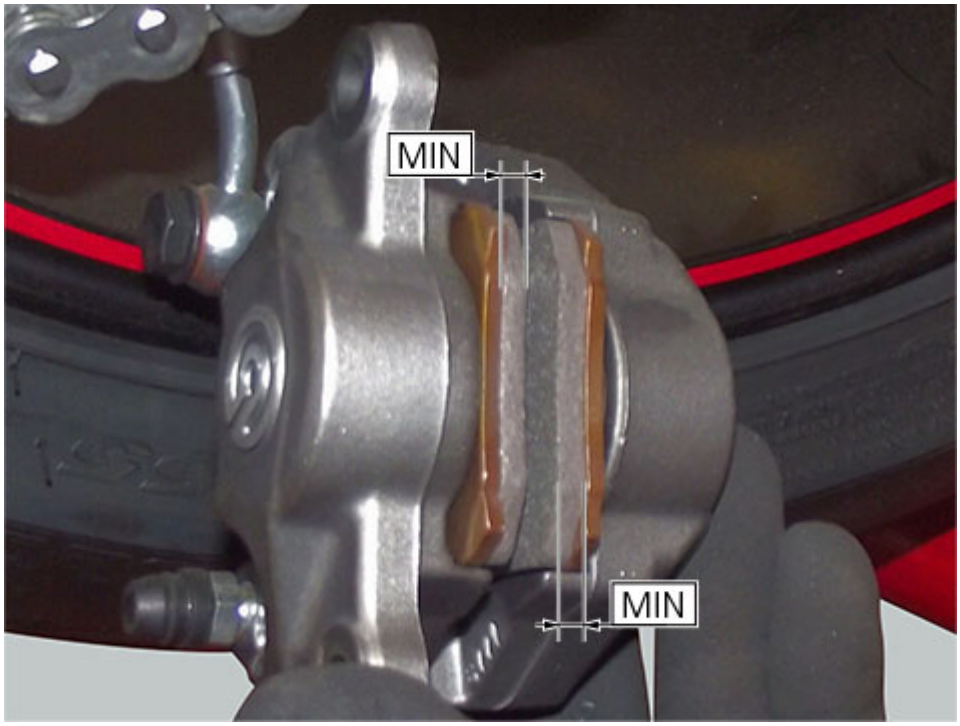

Change the brake pads as follows.
Remove the snap ring (8) from the pad retaining pin (9) on calliper right-hand side.

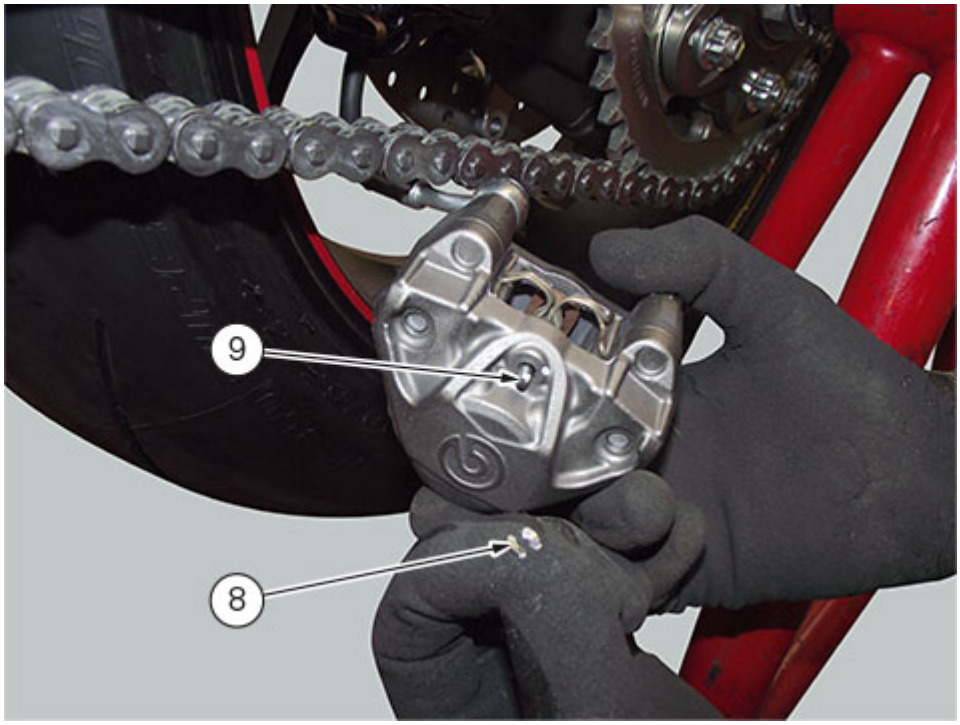

Slide pad retaining pin (9) outwards.

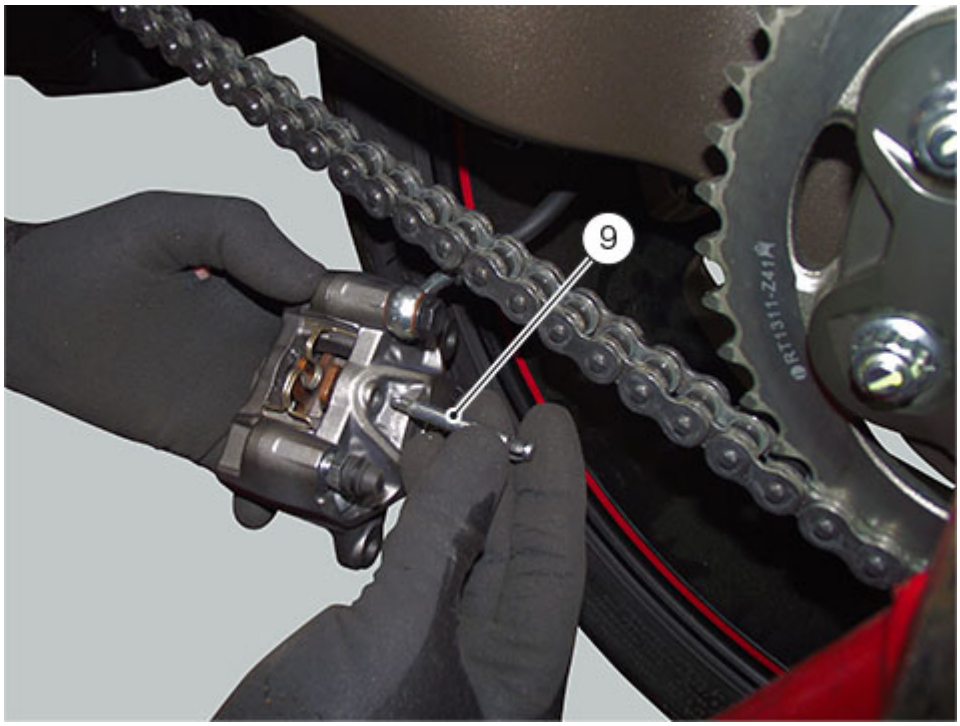

Remove pad retaining spring (10).

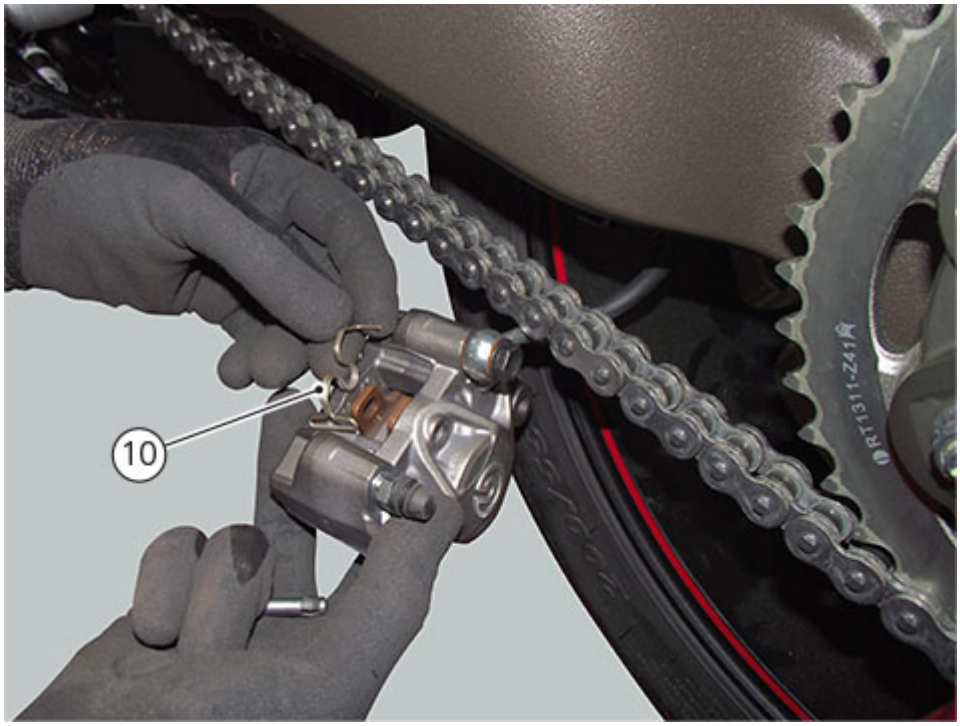

Remove rear brake calliper by loosening screws (11) and working on left-hand side.

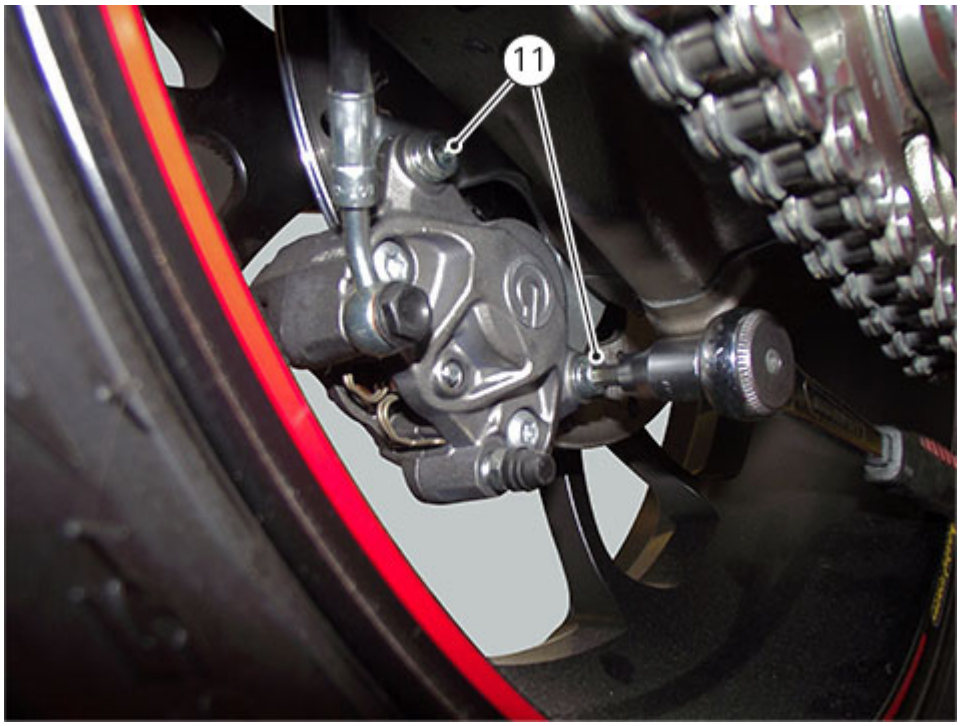

Force the calliper pistons back into their seats by forcing the old brake pads apart.
Remove the worn pads (12).

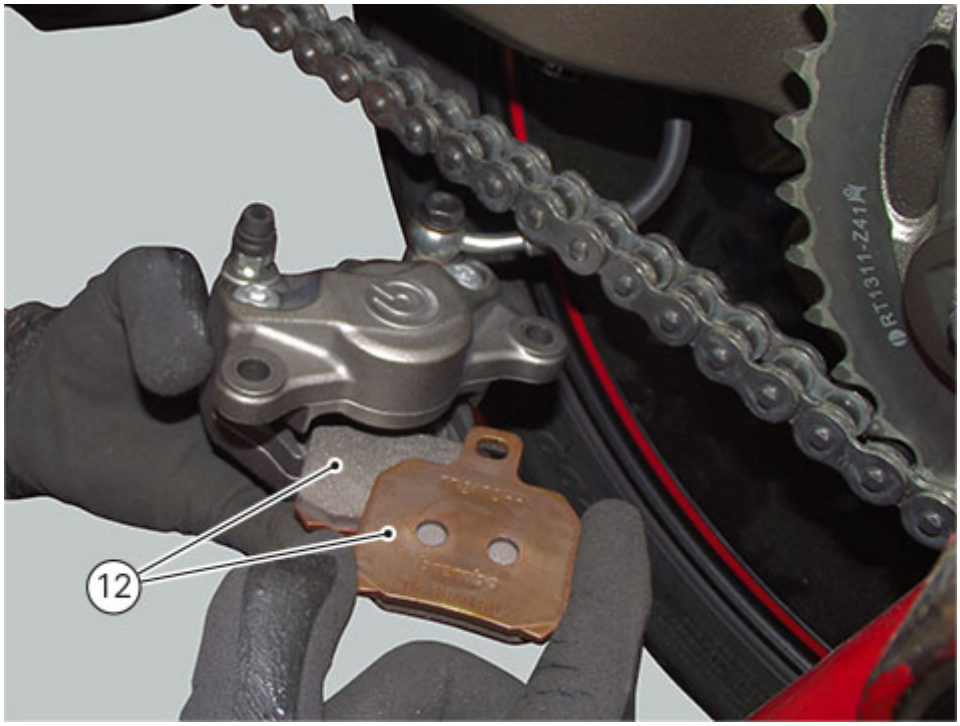

Note
Change pads that have a shiny or "vitrified" appearance.

Warning
Do not dispose of brake pads into the environment.

Smaltimento
Do not dispose of waste into the environment. Collect and deliver waste to authorized collecting centres. Dispose of waste in compliance with the prevailing local and national standards. European Waste Catalogue Codes recommended for waste disposal as indicated by Decision No 2001/118/EC: CER 16 01 12 (Brake pads, other than those mentioned under item 16 01 11).

Note

It should be noted that the above-mentioned CER code is a general and non-binding provision, provided based on product original composition and intended use. The user is thus responsible for selecting the CER code most suitable to the concerned product, based on product real use and taking into account any alterations and/or contaminations of the product, as well as any amendments to the prevailing standard on waste disposal.

Fit new pads after having applied the indicated product.
Refit rear brake calliper, then start and tighten the screws (11) to a torque of 25Nm ±5%.

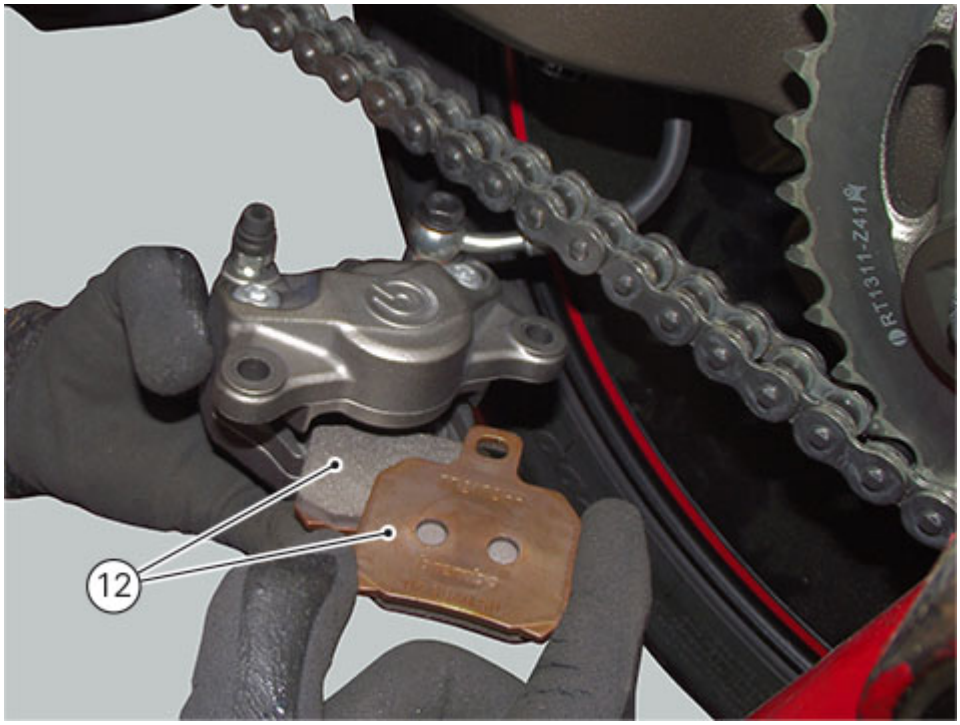

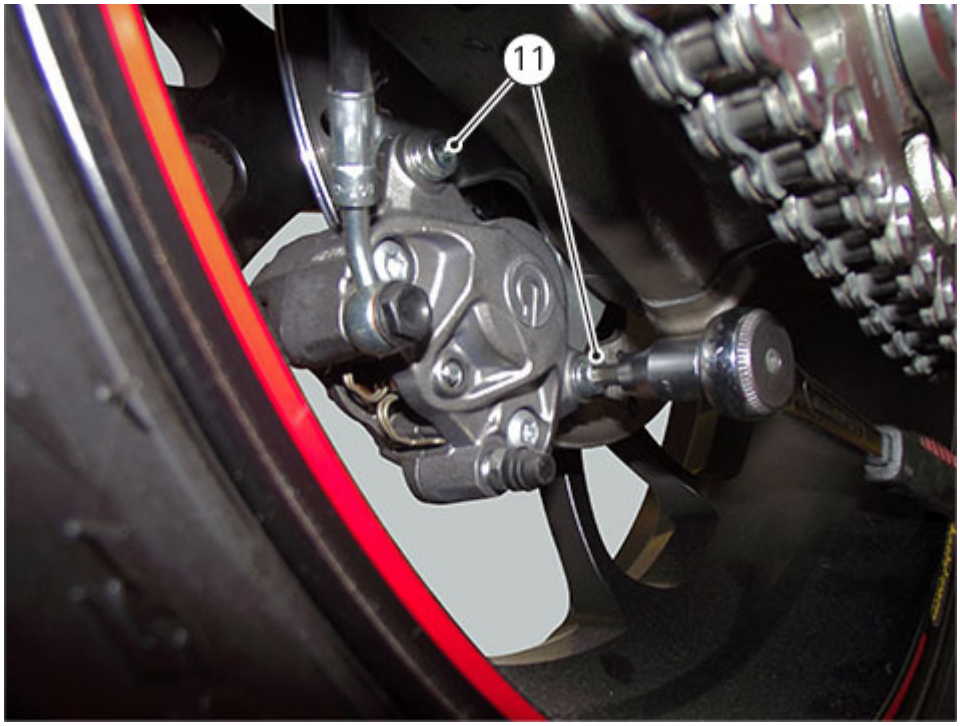

Insert pad retaining clip (10) and centring pin (9), locking it in place with ring (8).

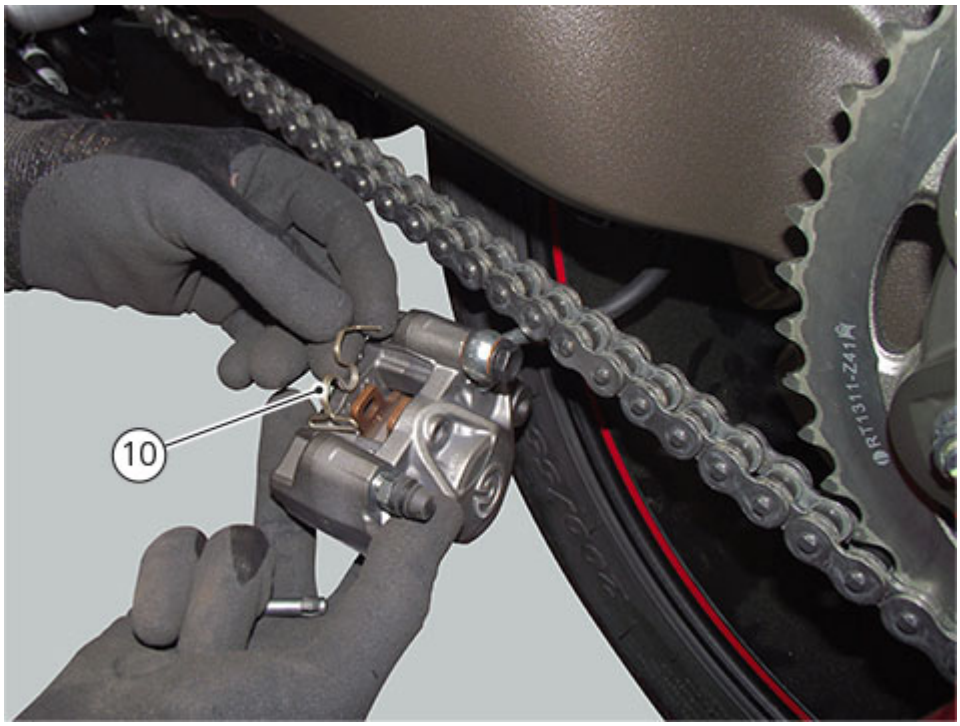
10

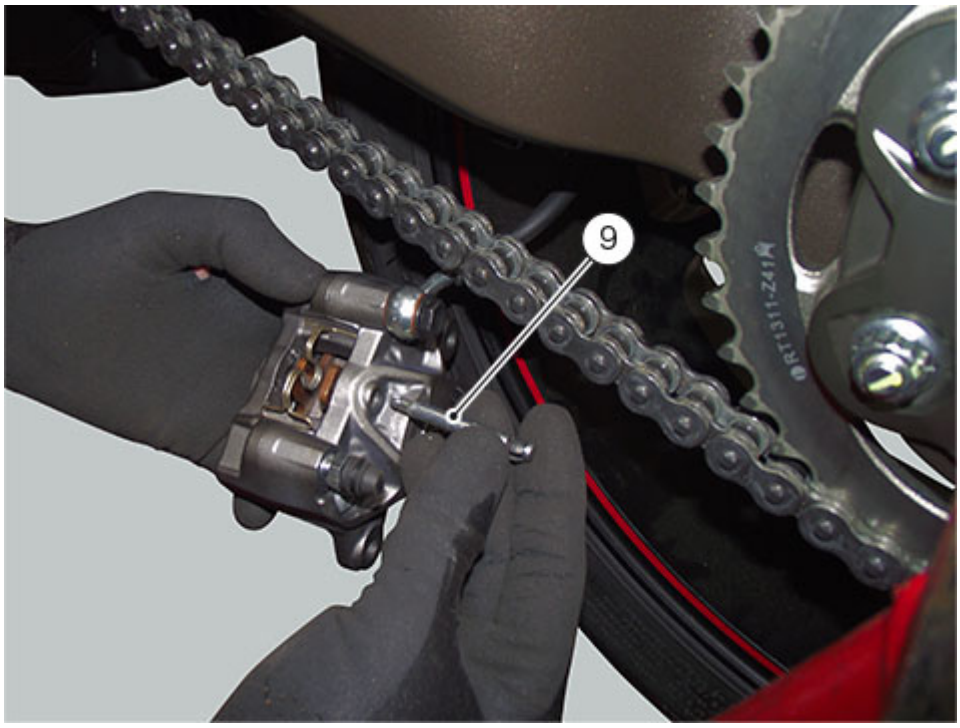
9

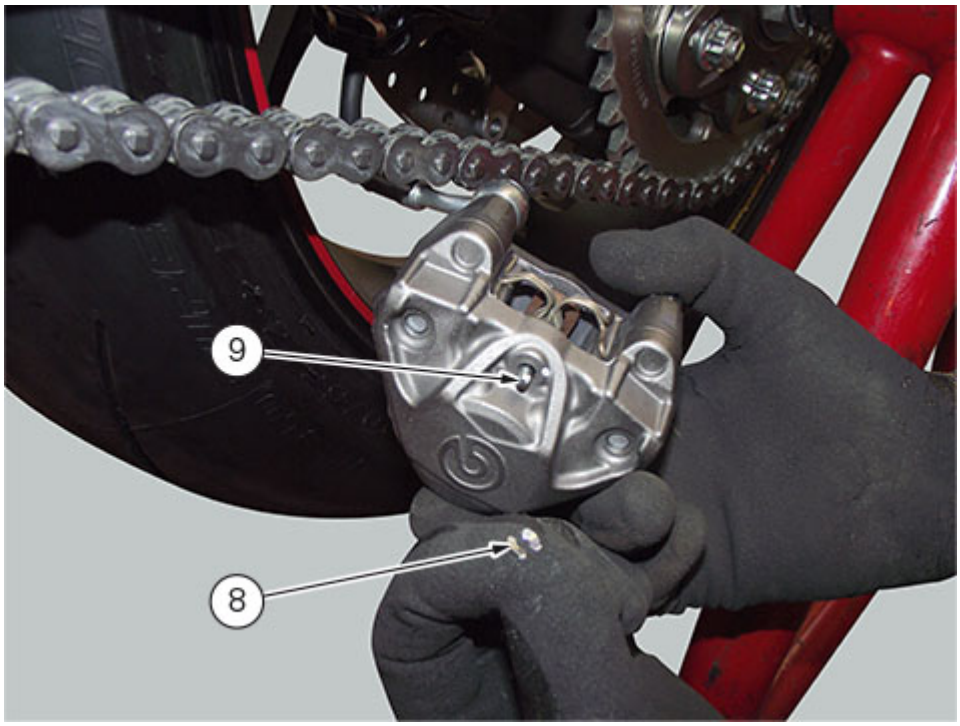

Operate the brake pedal repeatedly so that the pads firmly bed in against the disc thanks to the brake fluid pressure.

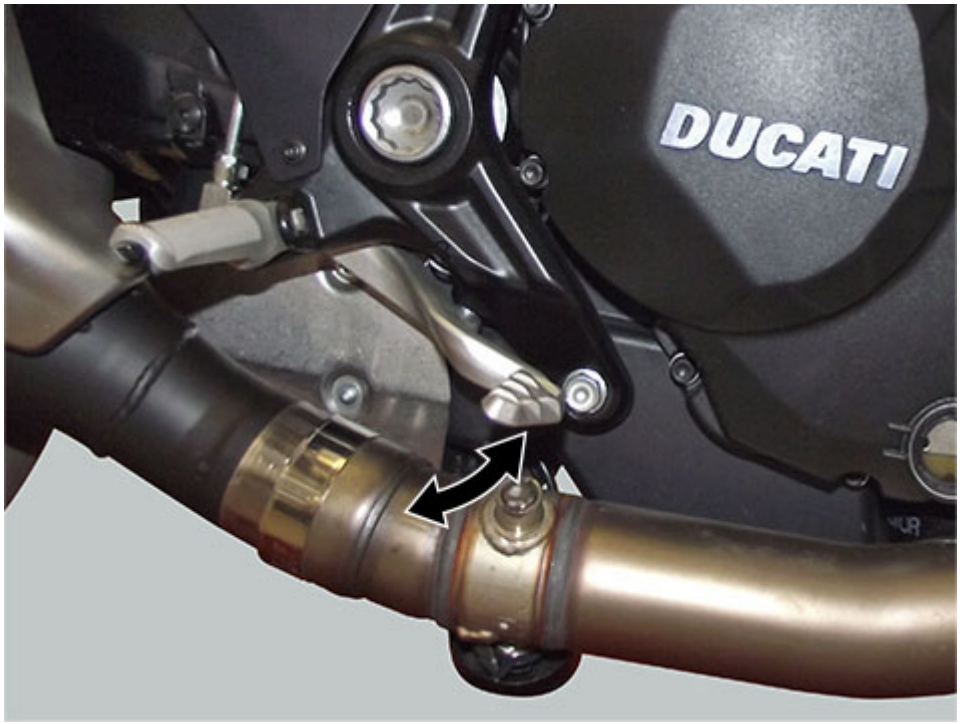

Check that the fluid level inside reservoir is between the "MIN" and "MAX" marks.
If this is not the case, unscrew the plug (6) of reservoir cover and top up (Changing the fluid in the front brake system)

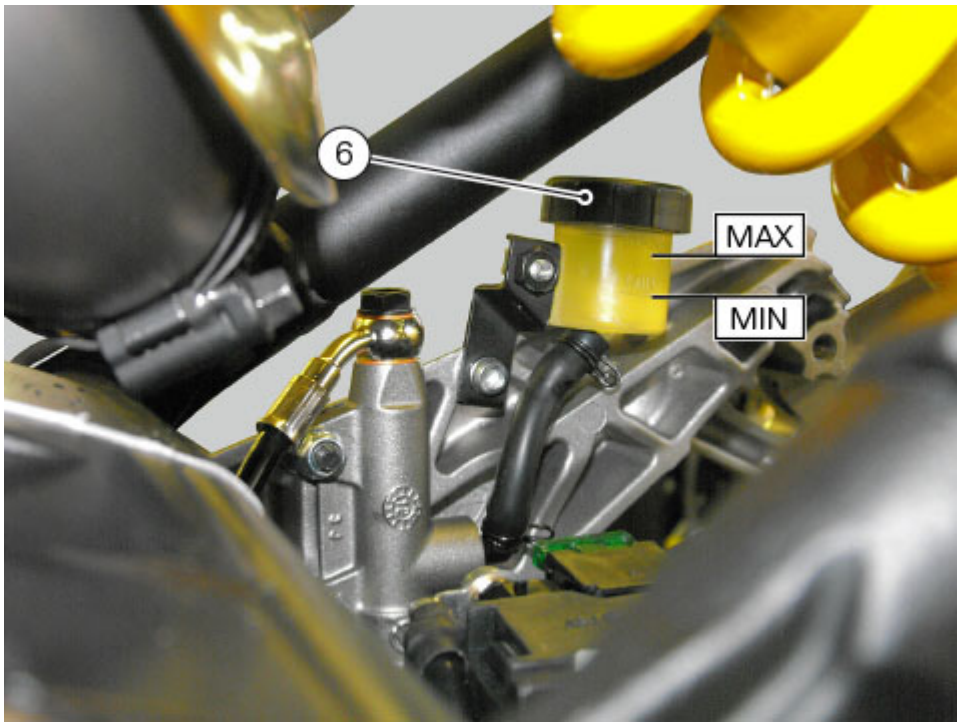
6
MAX
MIN

Checking front brake pad wear and replacing brake pads

Warning
Brake fluid is corrosive and will damage paint. Avoid contact with eyes and skin. In case of accidental contact, wash thoroughly with water.

Important
On handing over the motorcycle after changing the brake pads, inform the Customer that the front brake must be used gently for the first 100 km to allow the pads to bed in completely.

Check brake pads wear through the inspection hole in the callipers.
Change both pads if friction material thickness of even just one pad is about 1 mm.

Warning
Friction material wear beyond this limit would lead to metal support contact with the brake disc thus compromising braking efficiency, disc integrity and rider safety.

Remove the callipers by loosening the screws (1) retaining the front brake calliper to the fork leg, collecting the two spacers (9).



Remove the safety split pin (2).
Remove the worn pads (3).

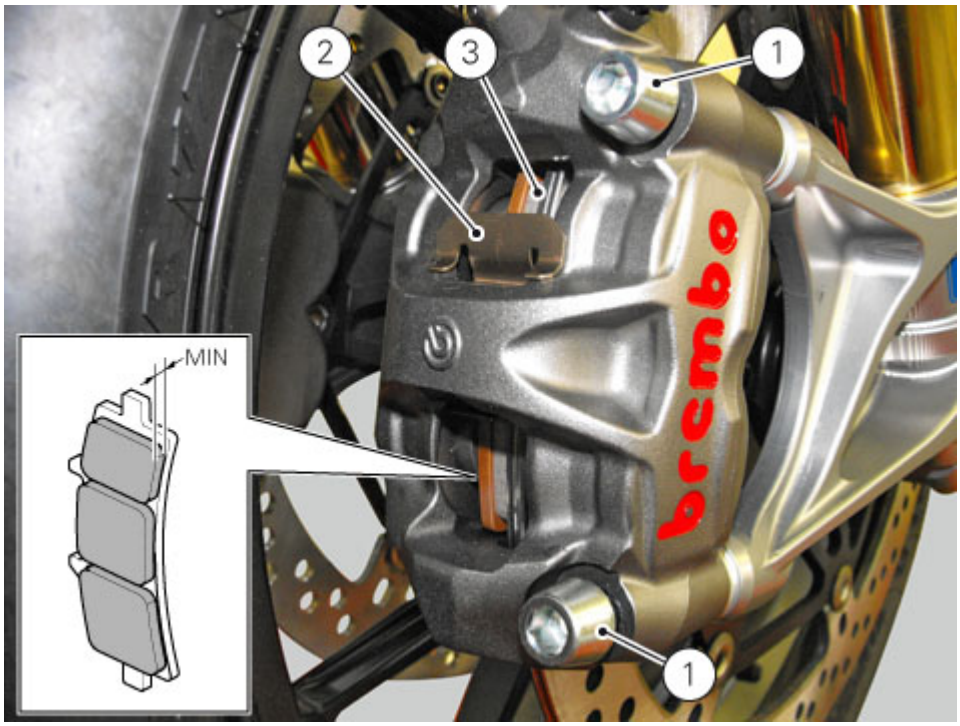

Note

Change pads that have a shiny or "vitrified" appearance.

Warning

Do not dispose of brake pads into the environment.

Smaltimento

Do not dispose of waste into the environment. Collect and deliver waste to authorized collecting centres. Dispose of waste in compliance with the prevailing local and national standards. European Waste Catalogue Codes recommended for waste disposal as indicated by Decision No 2001/118/EC: CER 16 01 12 (Brake pads, other than those mentioned under item 16 01 11).

Note

It should be noted that the above-mentioned CER code is a general and non-binding provision, provided based on product original composition and intended use. The user is thus responsible for selecting the CER code most suitable to the concerned product, based on product real use and taking into account any alterations and/or contaminations of the product, as well as any amendments to the prevailing standard on waste disposal.

Fit new pads (3) with the relevant safety split pin (2), push the calliper pistons fully inside their seats by widening the pads.
Position spacers (9), then insert front brake callipers on discs.
Apply the specified product to the retaining screws (1).

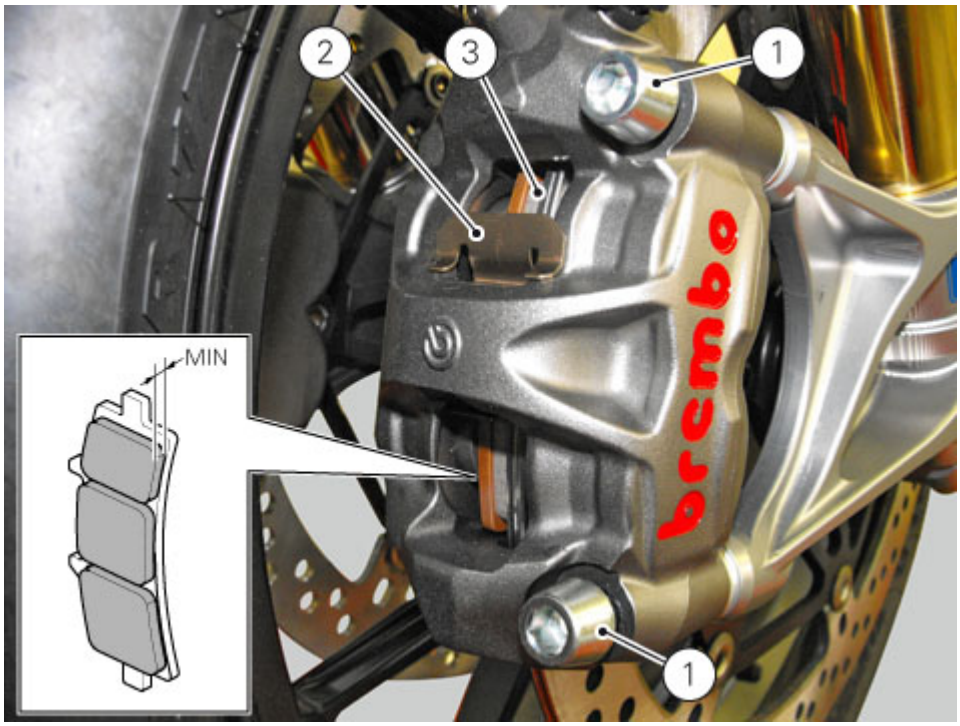



Note

Operate the brake lever repeatedly so that the pads firmly bed in against the disc thanks to the brake fluid pressure.

Check that the level in the master cylinder tank is not below the MIN mark.
If necessary, top up as follows.
Make sure that vehicle and, consequently, also brake fluid reservoir, are in horizontal position.
Turn the handlebar so that the reservoir is levelled.
Remove the cover (4) with membrane from the front brake fluid reservoir (5) by loosening the screws (6).
Top-up with specified fluid (Fuel, lubricants and other fluids) until reaching the MAX. mark.

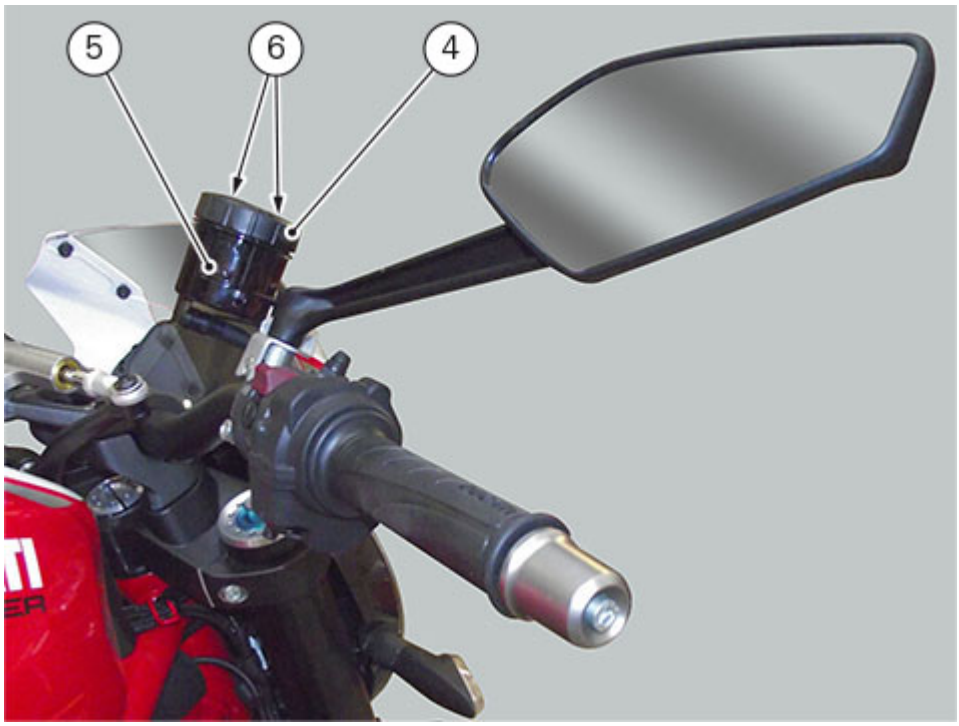

Hold the lever pulled towards the handgrip and simultaneously pre-tighten the two screws (1) to a torque of 2Nm ±10%, following a "upper-lower-upper" sequence.
Then tighten the two screws to a torque of 45Nm ±5%, following the same sequence.



Adjusting the chain tension

Kill the engine and set gear to neutral.
Set motorcycle on the side stand.
With a finger, pressing down and then releasing, check the vertical slack in point (A) (where swinging arm changes its angle).
Measure the distance (A) between the centre of the chain pins and the aluminium section of the swinging arm.
The distance should be A=35 to 37 mm.
Turn rear sprocket and carry out another two measurements at 120°, keeping chain tensioned.

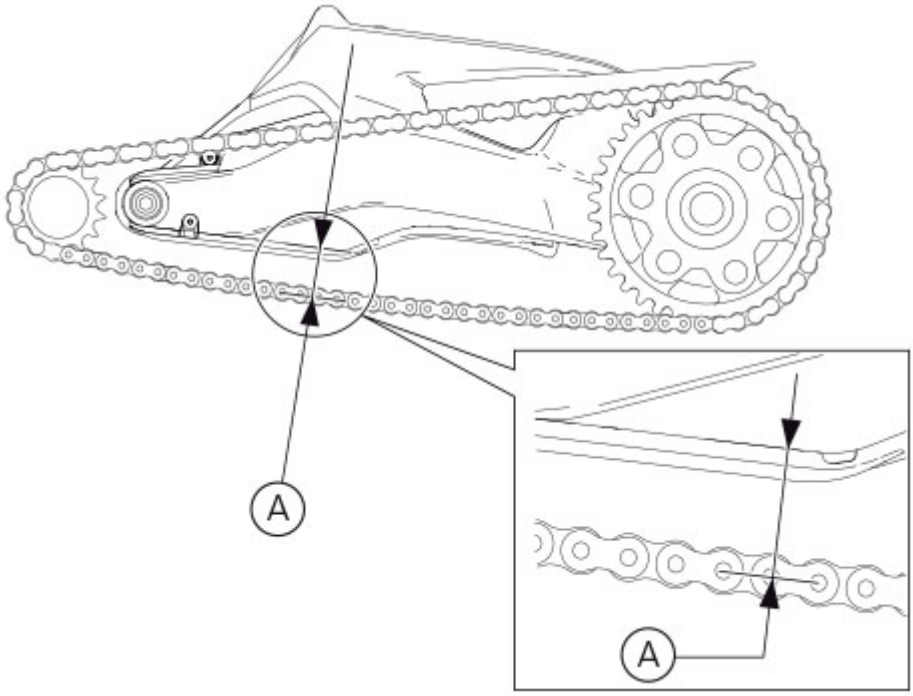

Important
If the drive chain is too tight or too slack, adjust it so that tension reading will fall within specified range.

Important
An incorrectly tensioned chain will lead to early wear of the transmission components.

Loosen screw (1) locking rear hub to swinging arm.

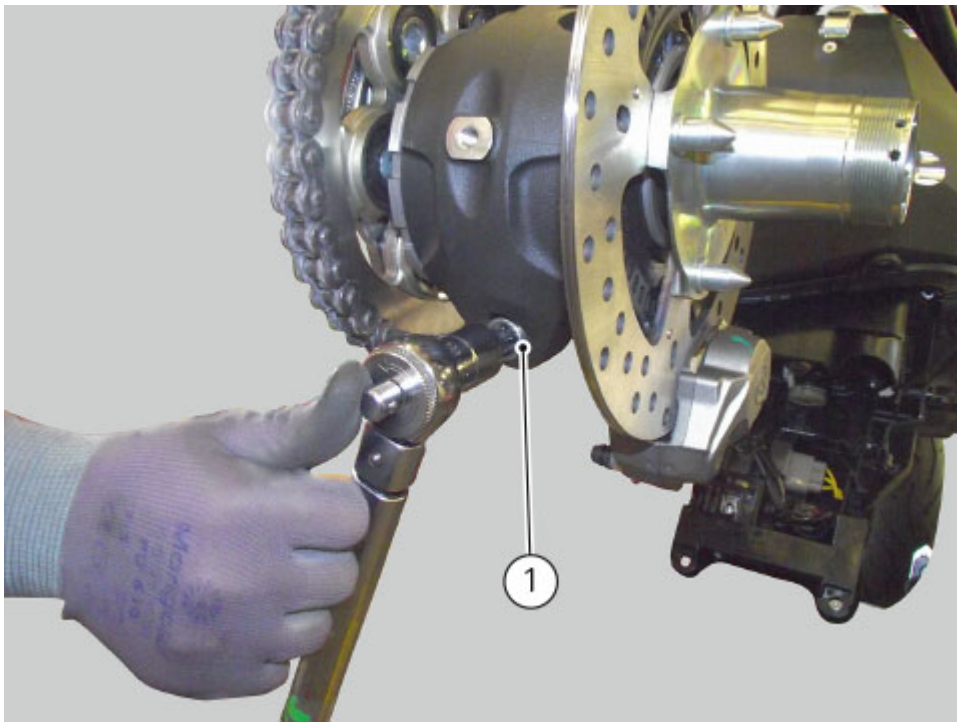

Using pin wrench (A) no. **88713.1038** insert its tooth in the eccentric hub (2).
Rotate the eccentric hub (2) to obtain the correct chain tension.
Turn counter clockwise to tension chain, while turn counter clockwise to slacken it (chain-side view).

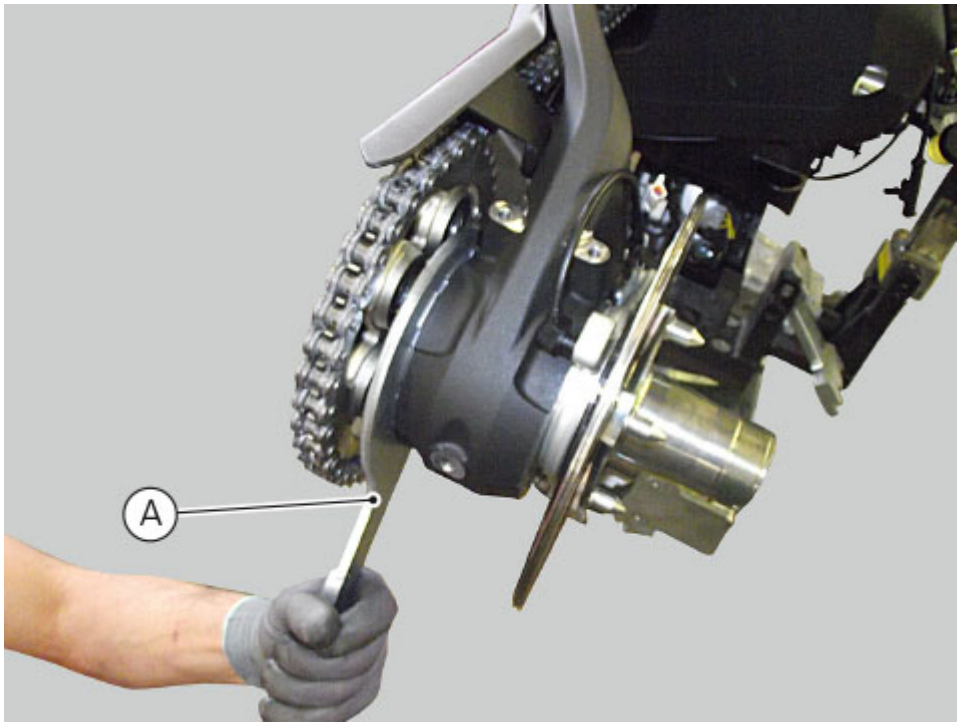

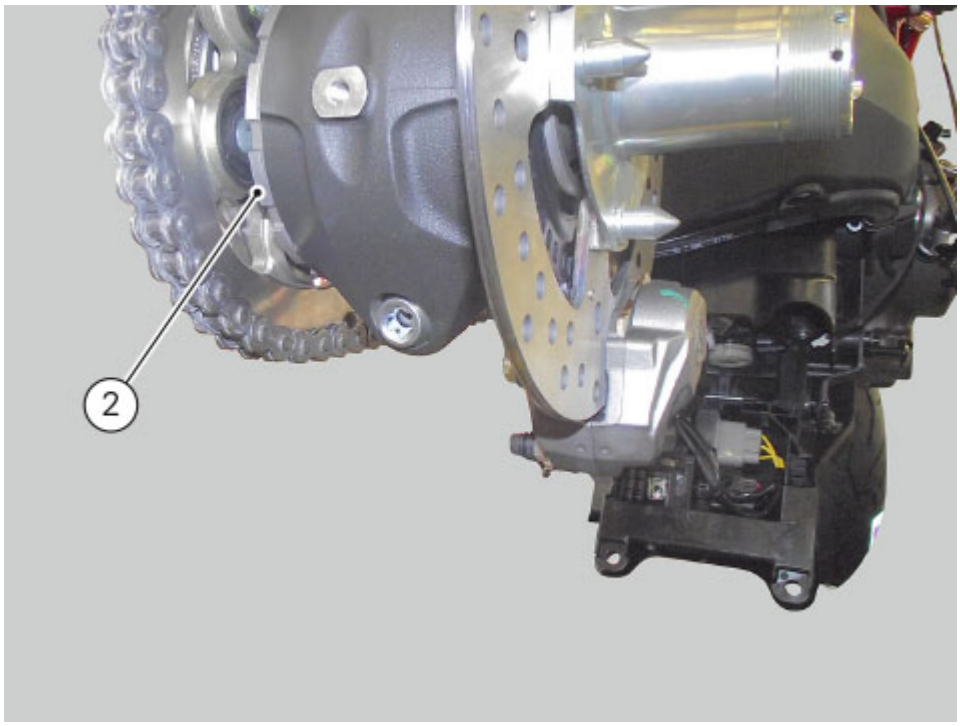

Important

An incorrectly tensioned chain will lead to early wear of the transmission components.

If screw (1) was removed, lubricate screw underhead and thread with the specified product.
Then tighten screw to a torque of 40Nm ± 5%, following a 1-2-1 sequence.

Important

Correct tightening of swinging arm screw is critical to rider and passenger safety.

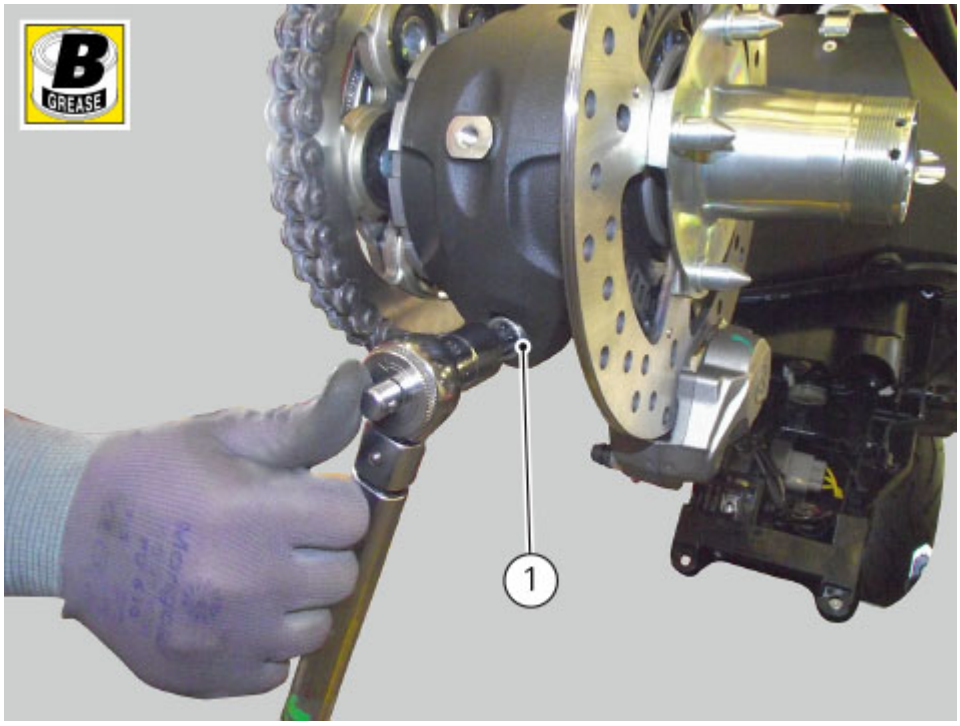

Adjusting the steering head bearing play

Excessive handlebar play or shaking fork in the steering head indicate that the play of the bearings requires adjustment.
The engine block of this vehicle is a load-bearing part. To work on the parts supported by the engine block, such as frame, the engine block shall be duly supported, as described here below.

Remove the steering damper (Removing the steering damper).
Remove the headlight fairing (Removing the headlight fairing).
Remove the ignition switch (Removing the ignition switch).

Position engine repair work bench (A) (part no. **88713.3092**) and engine support (B) (part no. **88713.3927**) under the engine block to duly support it.

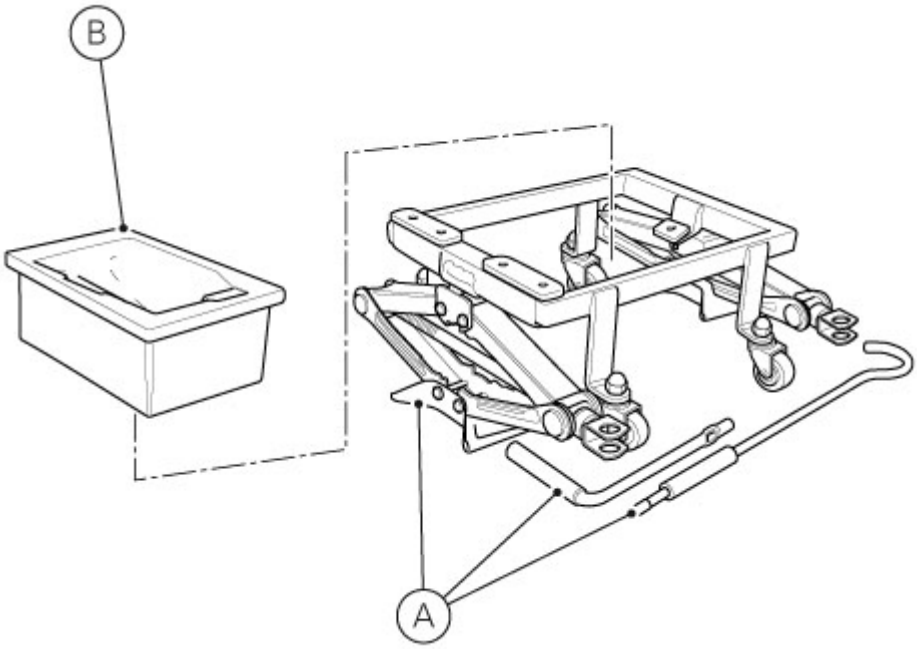

Loosen the clamp screw (1) that holds the steering tube to the steering head.



Slacken the clamp screws (2) securing the steering head to both fork legs.

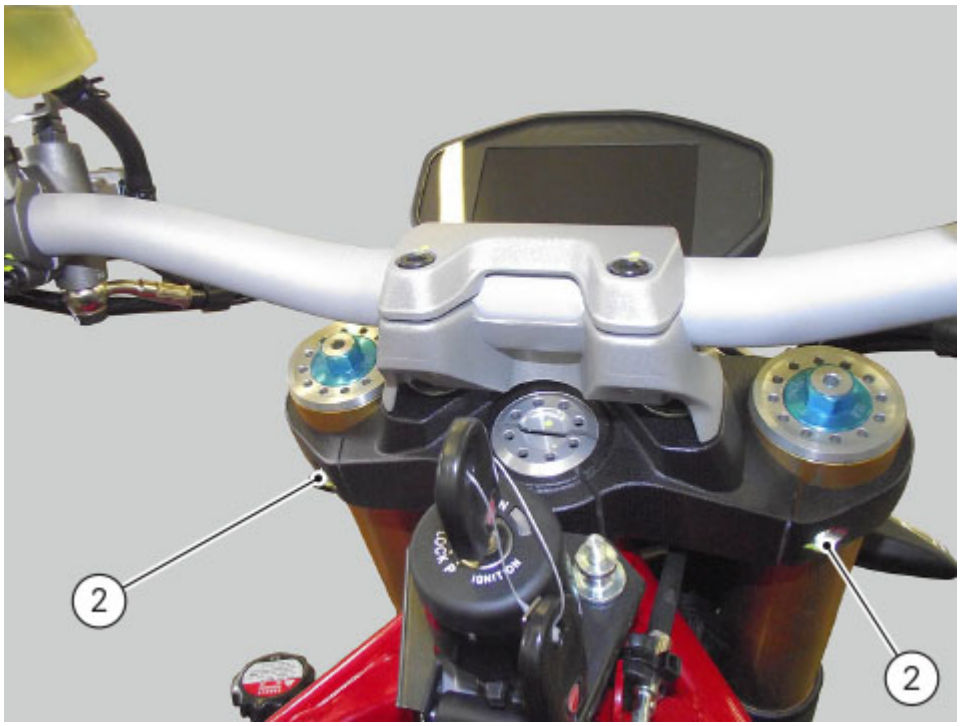

Undo the four screws (3) of handlebar U-bolt (4).



After having moved handlebar to the front, loosen the two retaining screws (5) on lower U-bolt (6), collecting the relevant nuts (7) and washers (8) underneath.

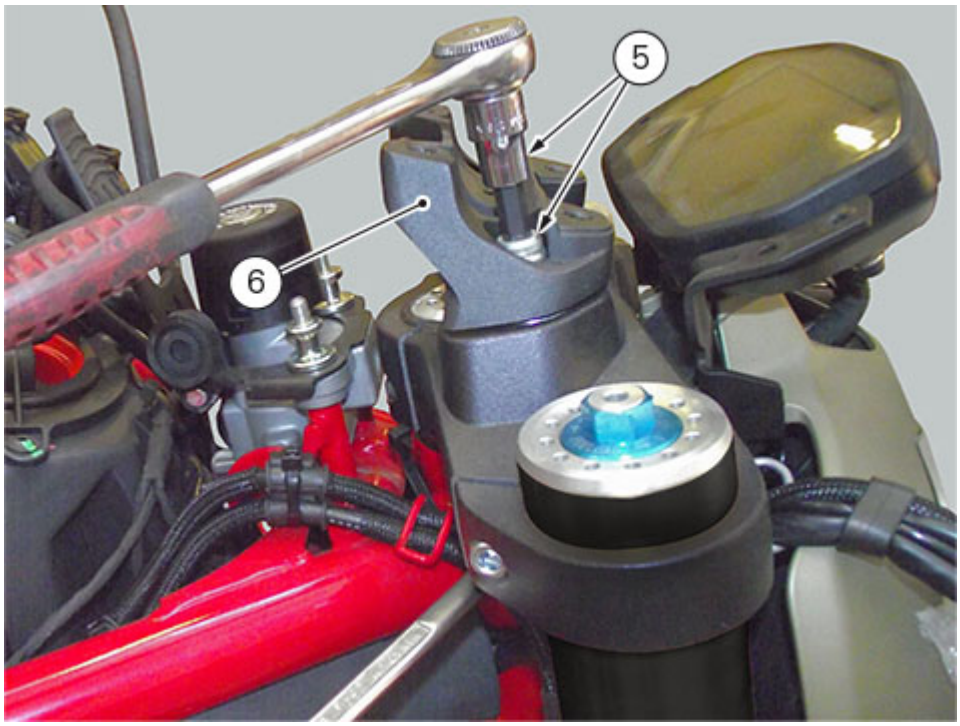

Using the special tool (A) part no. **88713.1058** lock the ring nut (9) to a torque of 30Nm±5%.



Tighten the screws (1) to a torque of 18Nm±5% and the screws (2) to a torque of 24Nm±5%.



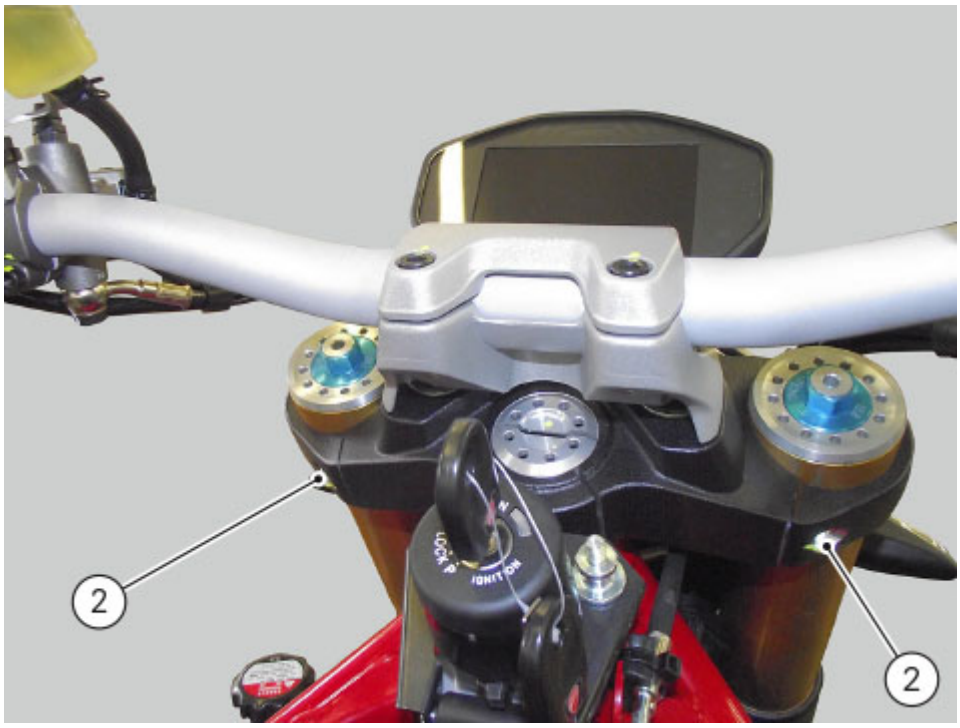

Reposition lower U-bolt (6) and start the two screws (5) on lower nuts (7), with washer (8). Tighten the two screws (5) with nuts (7) to a torque of 45Nm±5% following a 1-2-1 sequence.



Position handlebar on lower U-bolt, respecting the positions indicated on references.

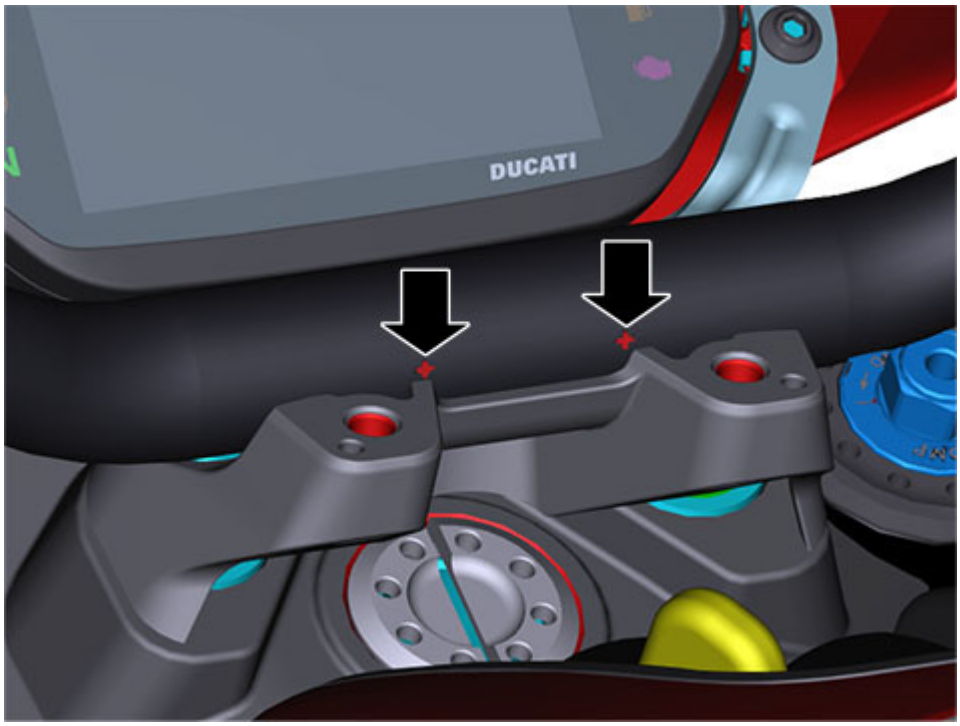

Once upper U-bolt (4) has been positioned, tighten the four screws (3) in a cross pattern to a torque of 25Nm ±5%, after applying the indicated product.

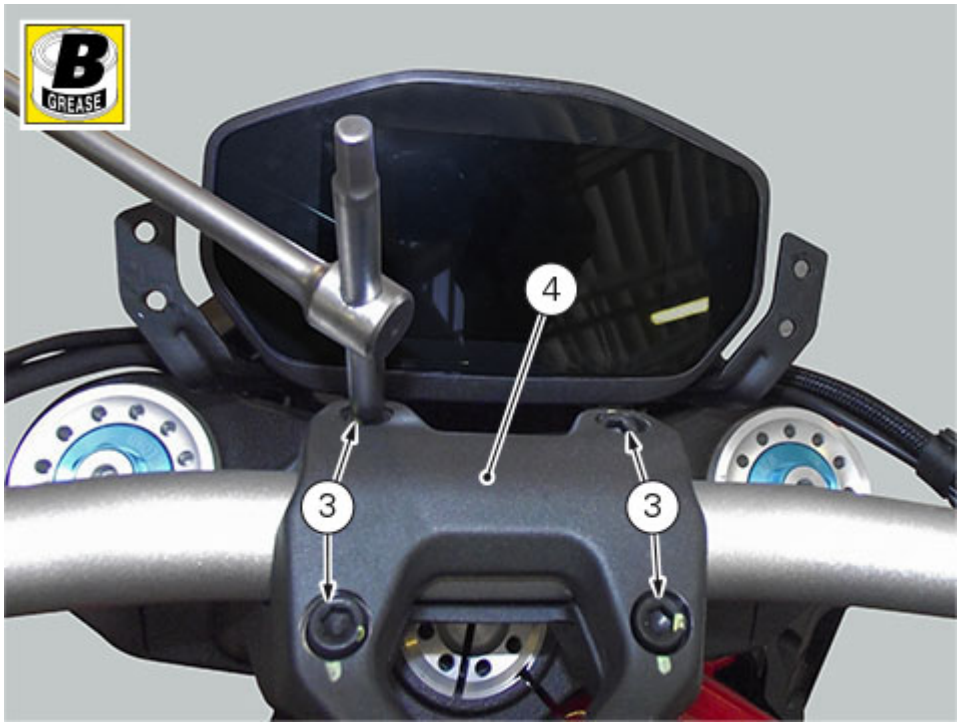

Refit the previously removed components:
Refit the ignition switch (Refitting the ignition switch).
Refitting the headlight fairing (Refitting the headlight fairing).
Refit the steering damper (Refitting the steering damper).

Filling the clutch hydraulic circuit

Warning

Clutch fluid is corrosive and will damage paint. Avoid contact with eyes and skin. In case of accidental contact, wash thoroughly with water.

Fill the reservoir with the fluid specified on table "Fuel, lubricants and other fluids" taken from an intact container.

Important

During the operation, fluid level must remain at a suitable level at all times. The end of the transparent plastic hose must remain immersed in the discharged fluid at all times.

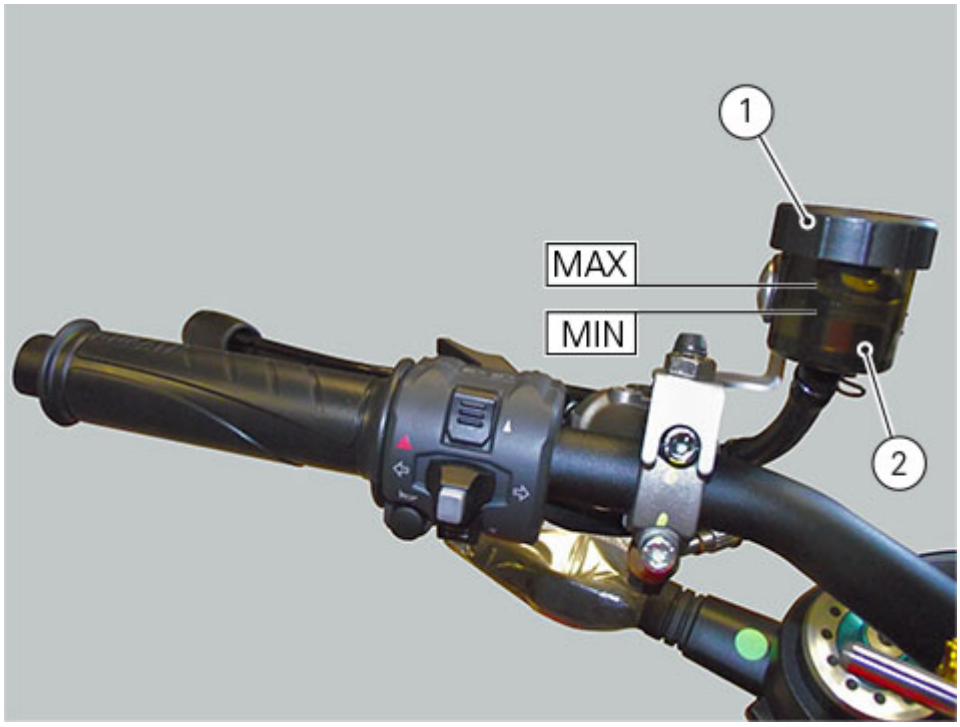

Operate the clutch lever several times to fill the circuit and expel any air.

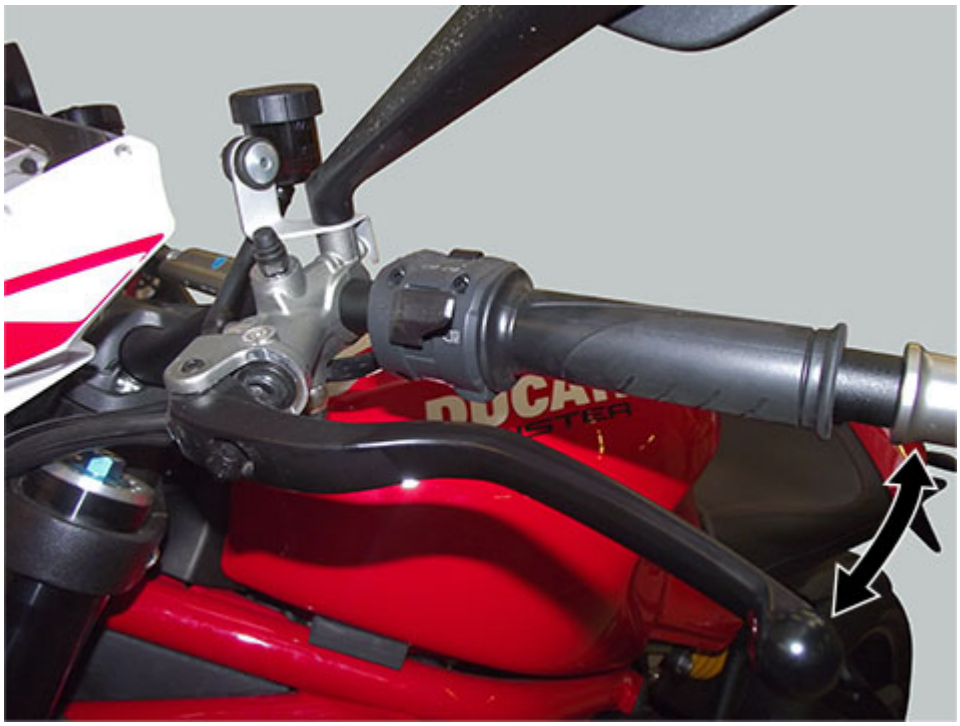

Connect the bleeding tool to the bleed valve (3).

Note
Follow the manufacturer's instructions when using a commercial clutch bleeding tool.

Pump with the bleeding tool and open the bleed valve (3) making sure that the level does not fall below the "MIN" mark.
Repeat the last operation until the fluid flowing from the tube is completely free of air bubbles.
If you do not have a bleeding tool available, connect a transparent plastic tubing to the bleed valve (3) as outlined in the draining procedure.

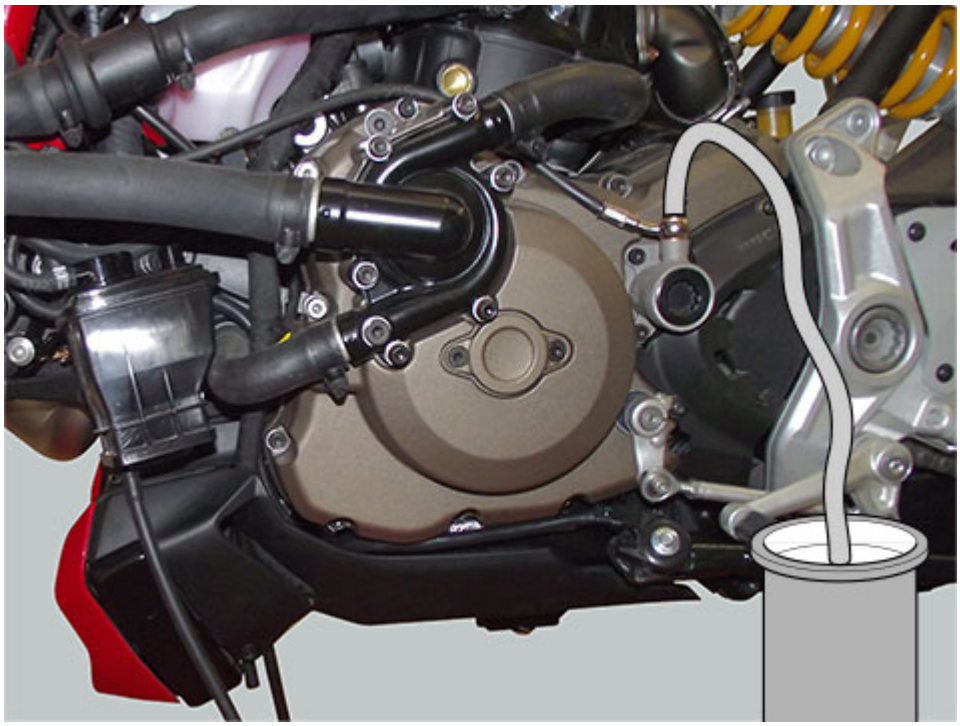

Open the bleed valve by 1/4 of a turn and operate the clutch lever several times until the fluid flows out of the bleed valve (3).
Pull the lever fully and then loosen the bleed valve by at least 1/4 of a turn.
Wait for a few seconds; then release the lever gradually while simultaneously closing the bleed valve (3).

Important
Do not release the brake lever until the bleed valve has been fully tightened.

Repeat the bleeding operation until the fluid emerging from the plastic tube is free of air bubbles.
Close the bleed valve (3) to 4Nm ±10% and install the protection cap.
Top up the fluid to the "MAX" mark of the reservoir (2).
Refit cover with membrane (1).

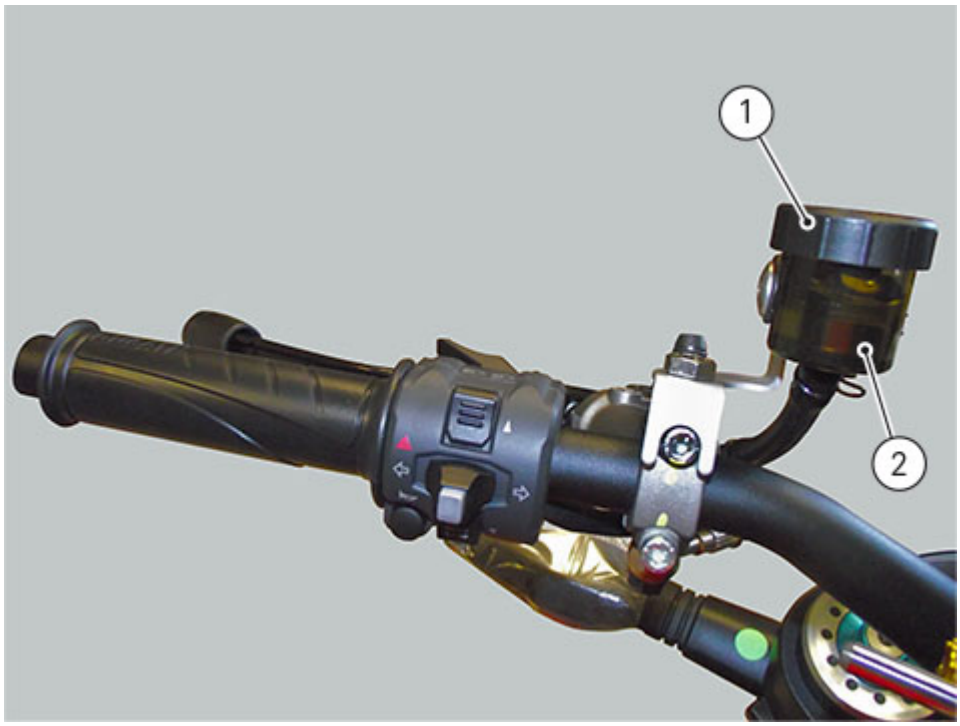
1
2

Draining the clutch fluid

Warning
Clutch fluid is corrosive and will damage paint. Avoid contact with eyes and skin. In case of accidental contact, wash thoroughly with water.

Remove the protective cap to expose the bleed valve (3).
Connect a clutch circuit bleeding tool to the clutch slave cylinder bleed valve (3).

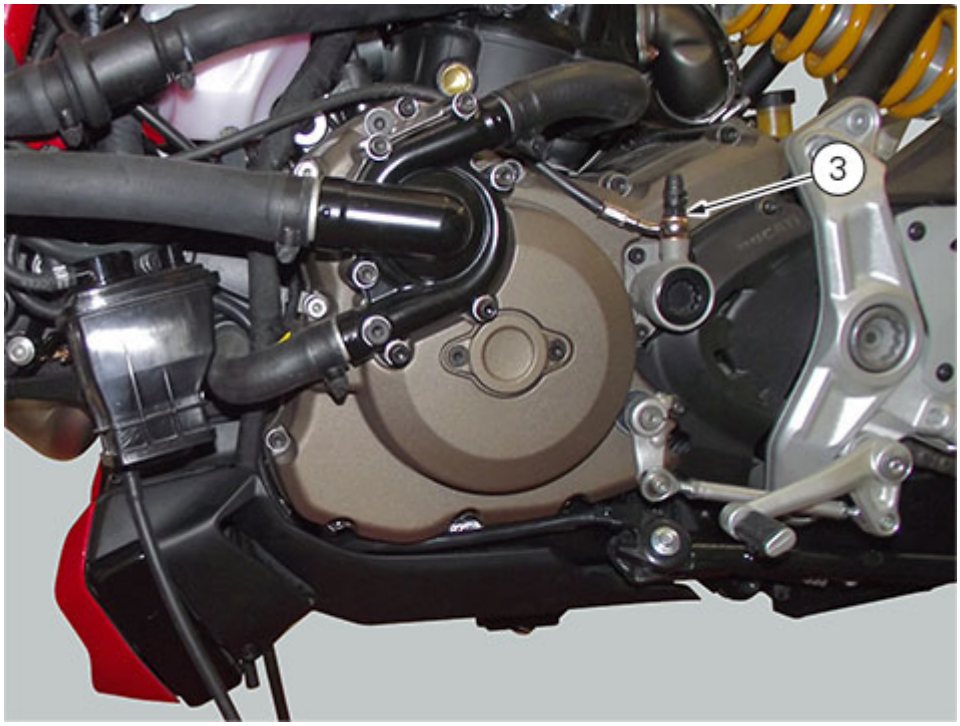

Note
Follow the manufacturer's instructions when using a commercial clutch bleeding tool.

Remove the cover (1) with the membrane from the clutch fluid reservoir (2).

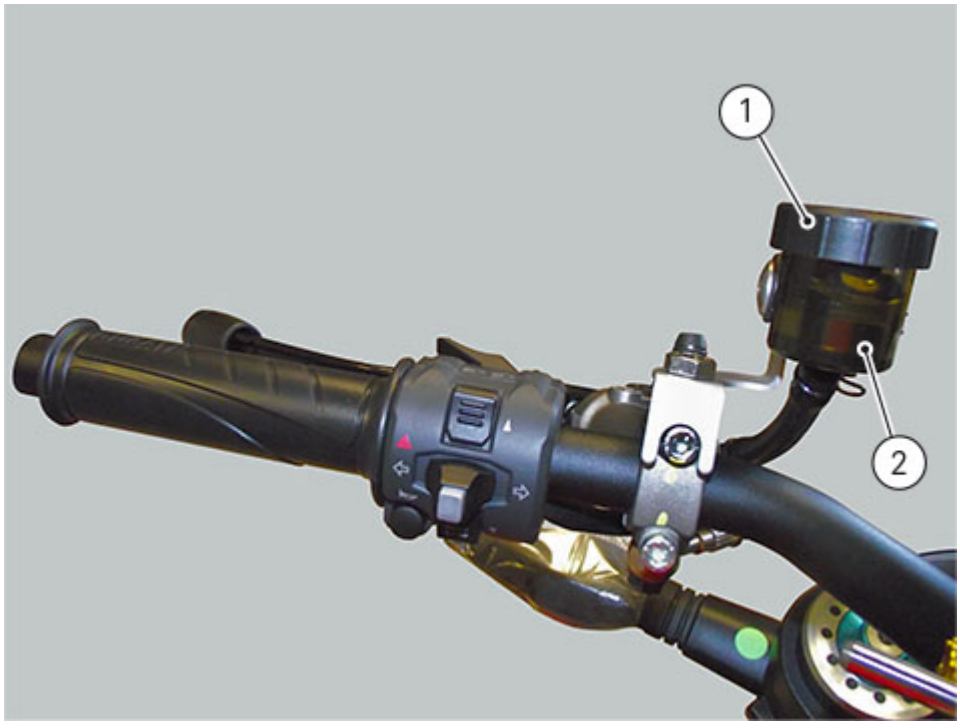

Open the bleed valve and pump with the bleeding tool until no more fluid flows out.
If you do not have a bleeding tool available, attach a transparent plastic tubing to the bleed valve (3) and insert

the other end of the tubing in a container placed on the floor.

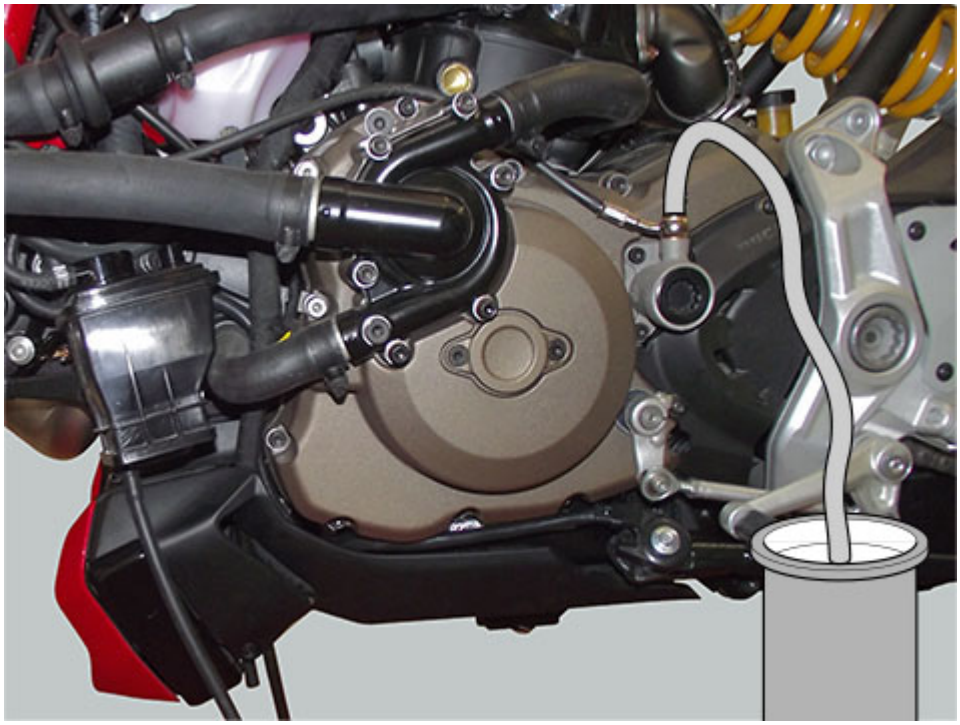

Unscrew the bleed valve by 1/4 of a turn.
Operate the clutch lever until all the fluid has been drained.



To help fully drain the circuit, it is recommended to remove the clutch slave cylinder.
Release clutch hose (4).
Loosen screws (5) and slide out clutch slave cylinder (6), taking care that the O-ring (7) remains well seated inside it.
If necessary, disassemble clutch slave cylinder, refer to sub-sections "Removing the clutch slave cylinder" and "Refitting the clutch slave cylinder".

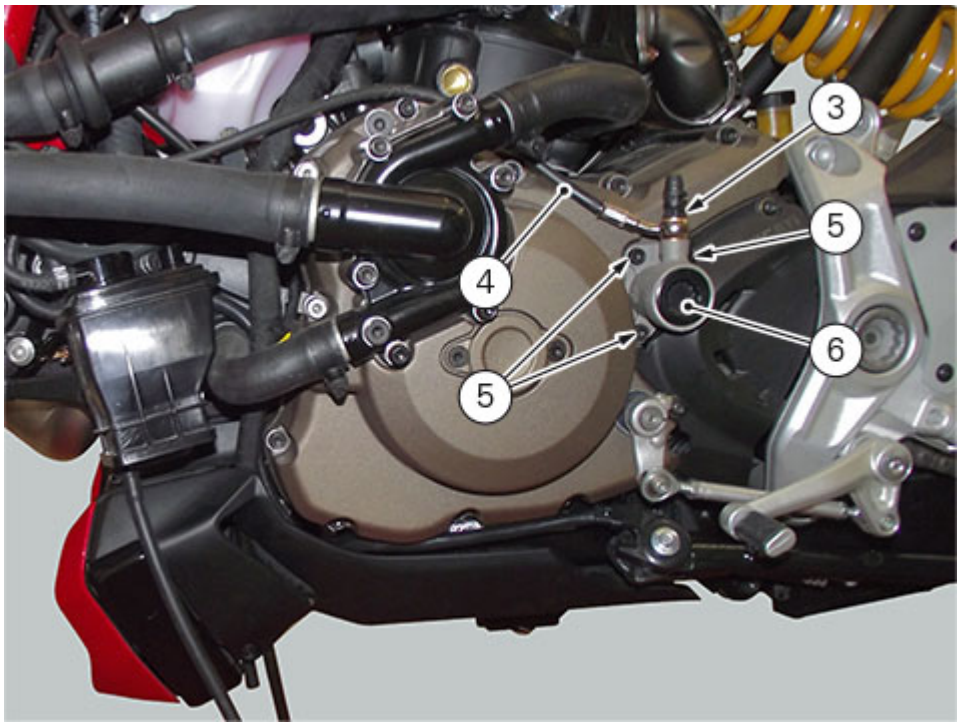

Refit cap by tightening screws (5) to a torque of 10Nm ± 10%.
Tighten bleed valve(3) to a torque of 4Nm ± 10%.

Changing the clutch fluid

Warning
Clutch fluid is corrosive and will damage paint. Avoid contact with eyes and skin. In case of accidental contact, wash thoroughly with water.

Warning
Do not dispose of exhausted oil into the environment

Smaltimento
Do not dispose of the exhausted fluid into the environment; do not pour the product, either new or exhausted, inside drains, water courses or the soil. Collect and deliver waste to authorized collecting centres. Dispose of waste in compliance with the prevailing local and national standards.
European Waste Catalogue Codes recommended for waste disposal as indicated by Decision No 2001/118/EC: CER 13 02 05* (Mineral-based non-chlorinated engine, gear and lubricating oils waste).

Note
It should be noted that the above-mentioned CER code is a general and non-binding provision, provided based on product original composition and intended use. The user is thus responsible for selecting the CER code most suitable to the concerned product, based on product real use and taking into account any alterations and/or contaminations of the product, as well as any amendments to the prevailing standard on waste disposal.

Remove the cover (1) with the membrane from the clutch fluid reservoir (2).
Siphon the fluid from the reservoir (2).
Fill the reservoir (2) with new fluid up to the "MAX" mark.

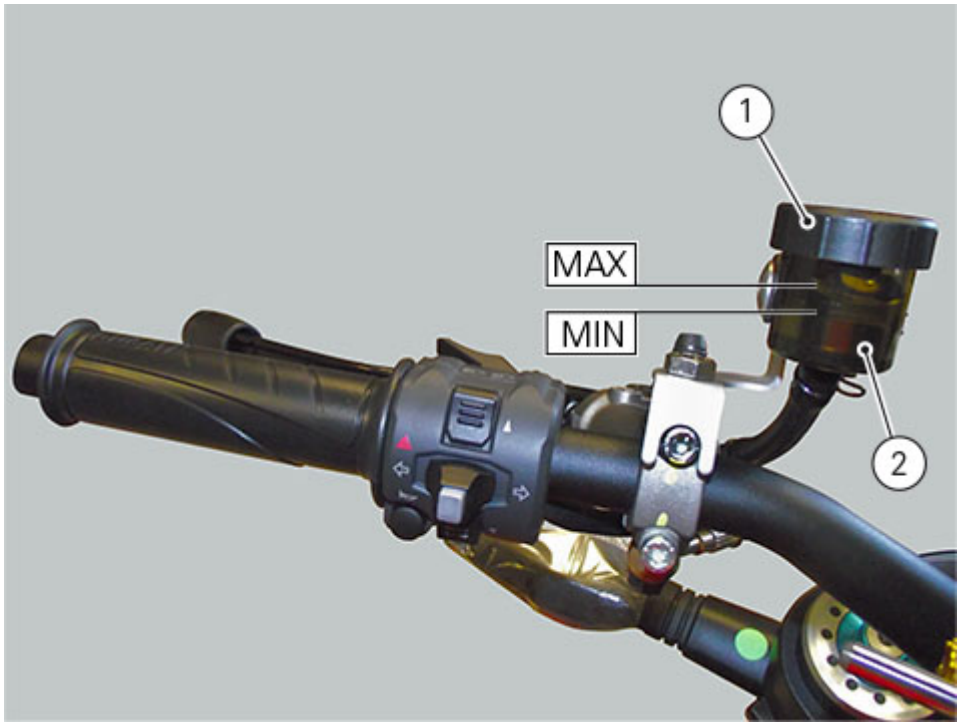

Operate the lever two or three times until the circuit is pressurised.
Hold the lever pulled towards the handgrip.

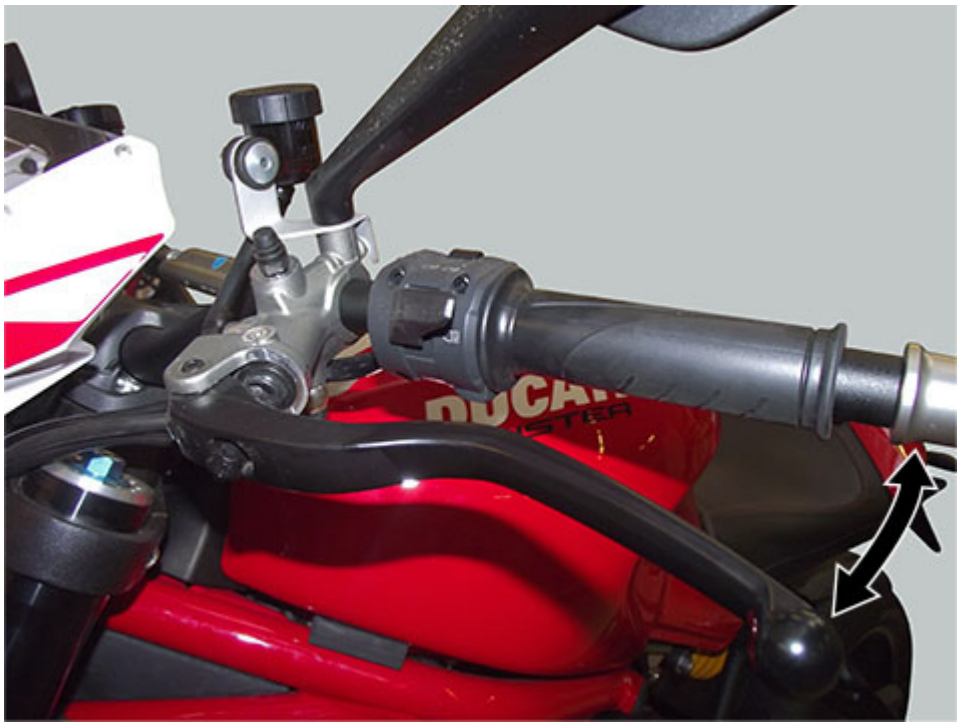

Attach a transparent plastic tubing to the bleed valve (3) and insert the other end of the tubing in a container placed on the floor.
Open the bleed valve (3) to allow fluid to flow out.

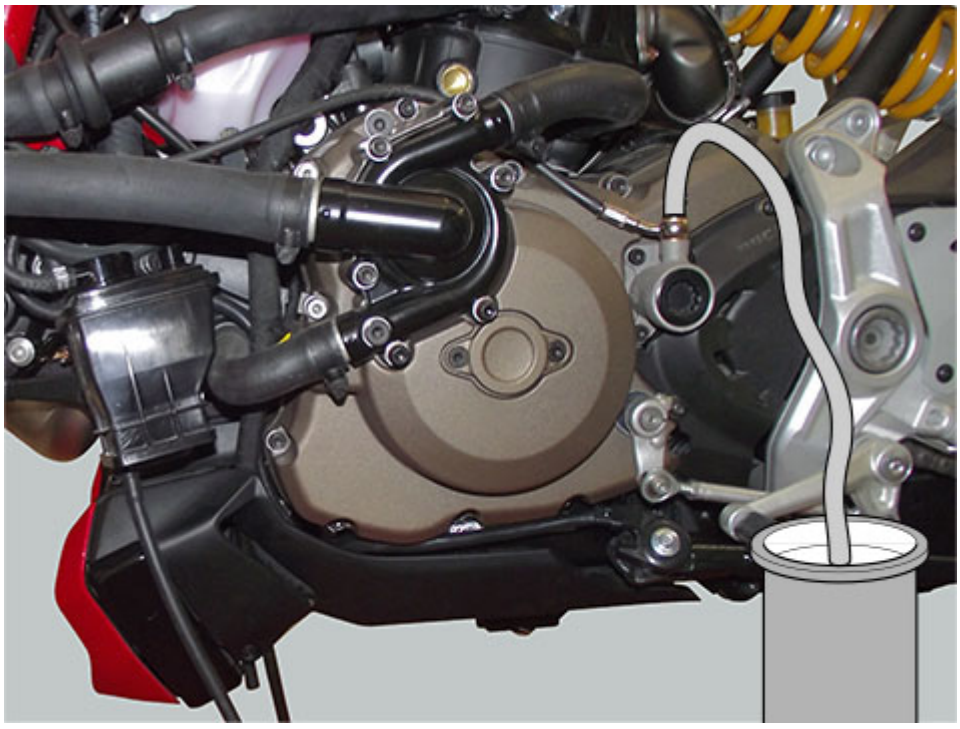

Warning
During the filling operation, always keep the fluid level above the MIN mark to avoid any air bubbles in the circuit.

Allow the fluid to flow from the bleed valve (3) until it changes colour.
Screw bleed valve (3) again, and tighten it to a torque of 10 Nm (Min. 9 Nm - Max. 11 Nm) and restore fluid correct level inside reservoir.

Changing the fluid in the rear brake system

Unscrew the cover (1) of the rear brake fluid reservoir (2).

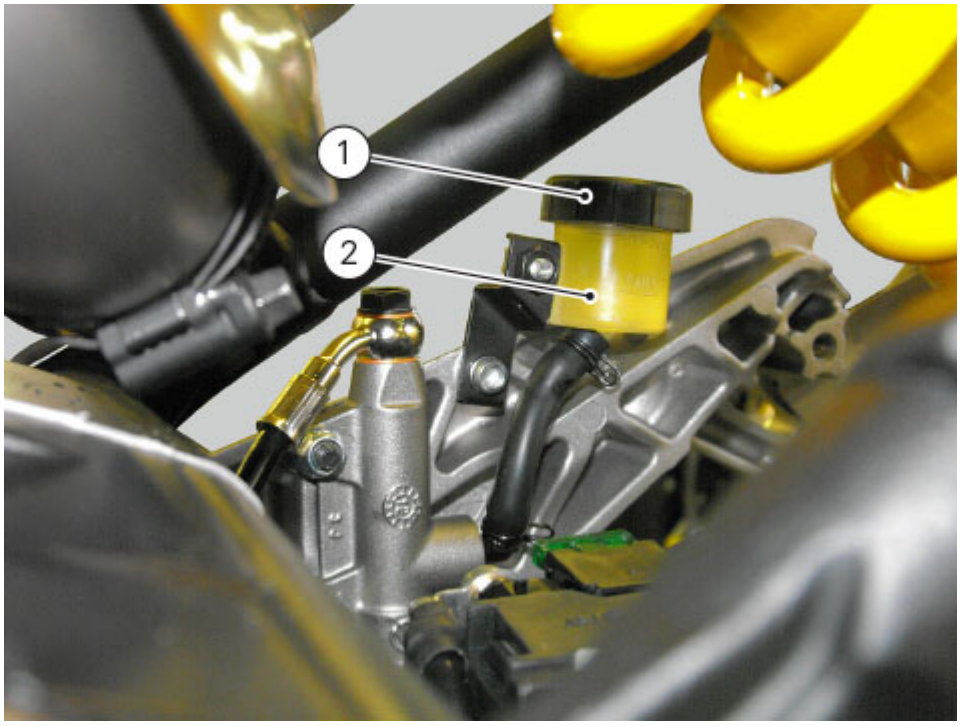

Attach a transparent plastic tubing to the bleed valve (3) and insert the other end of the tubing in a container placed on the floor.

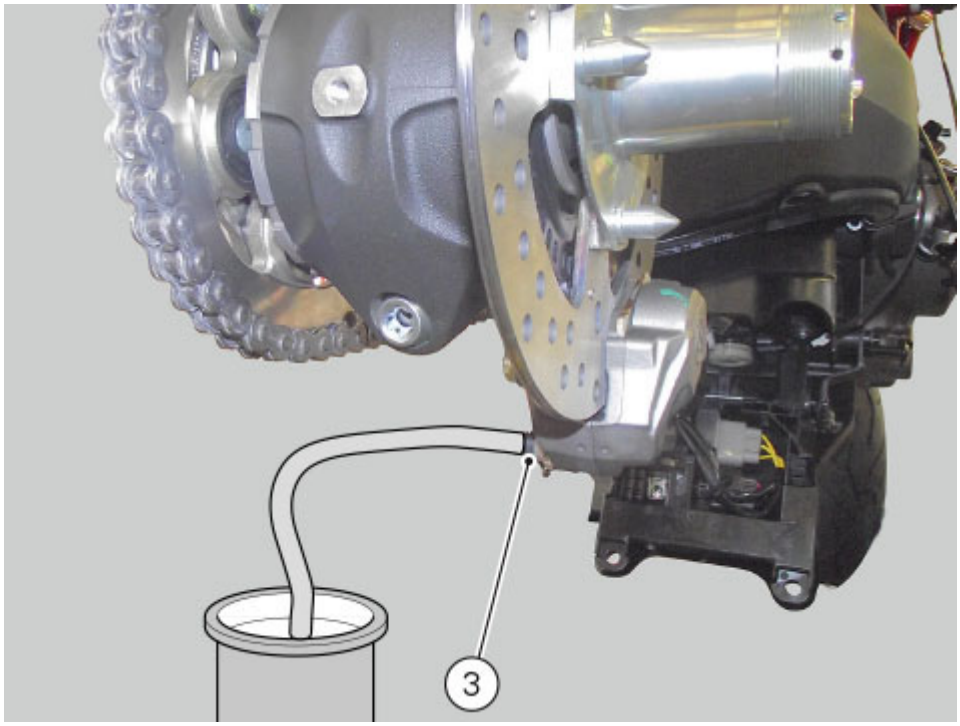

Siphon the fluid from the reservoir (2).
Fill the reservoir (2) with new oil up to the "MAX" mark.

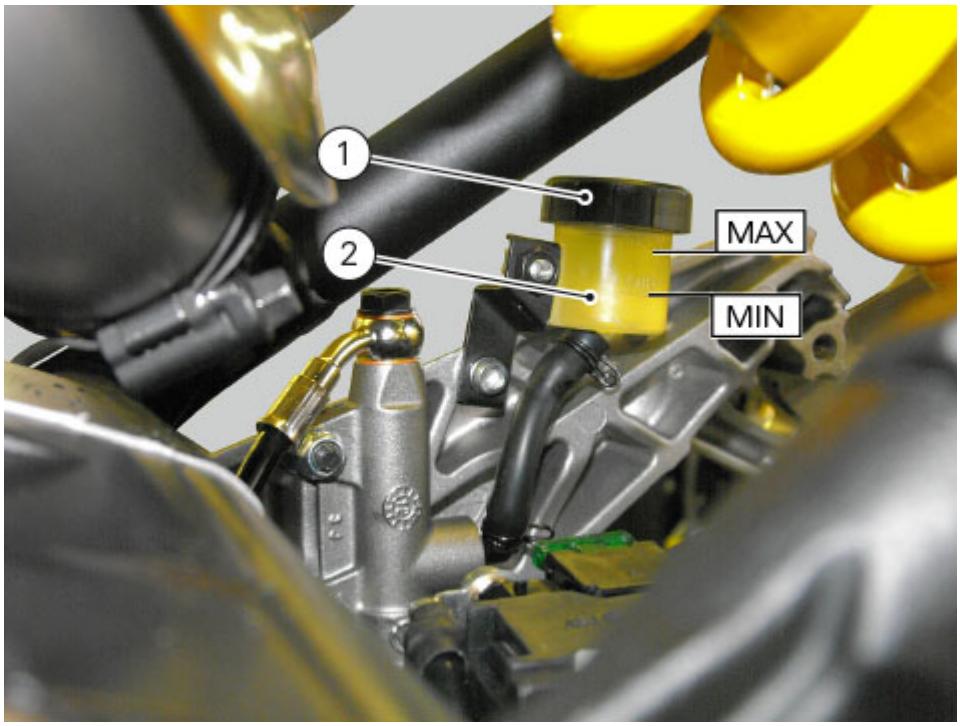

Operate the brake pedal to pressurise the circuit.
Keep pedal pushed down.

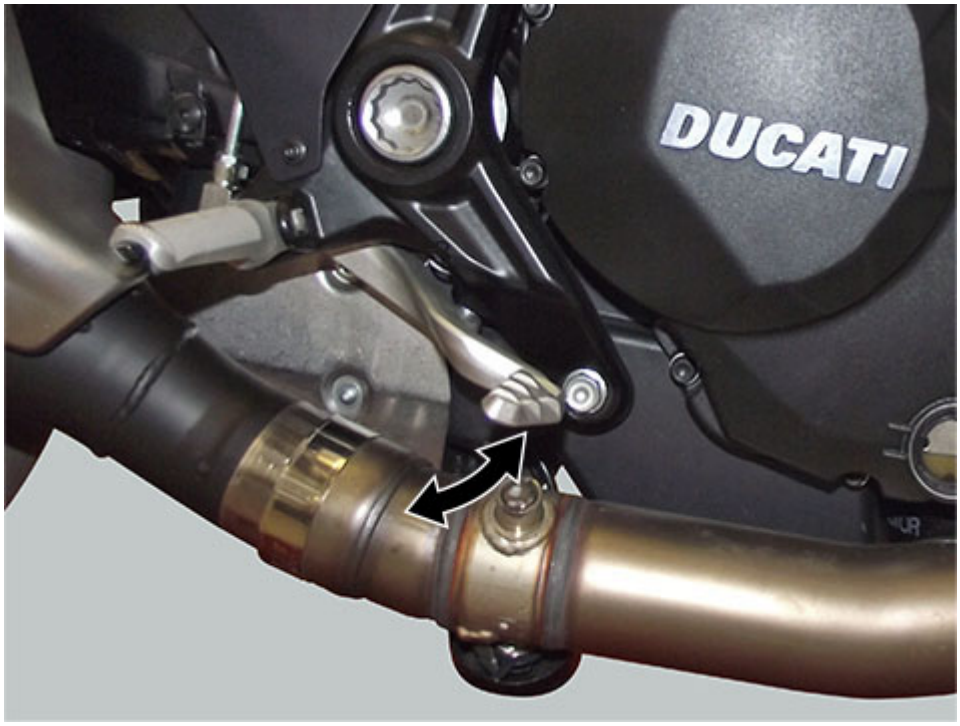

Open the bleed valve (3) to allow fluid to flow out.
The pedal is at the end of travel when it is in the lower position.
Now, screw bleed valve (3) to a torque of 4Nm ±10%, and release the pedal; press the pedal again.
Repeat the above operation until the old fluid flows out completely.

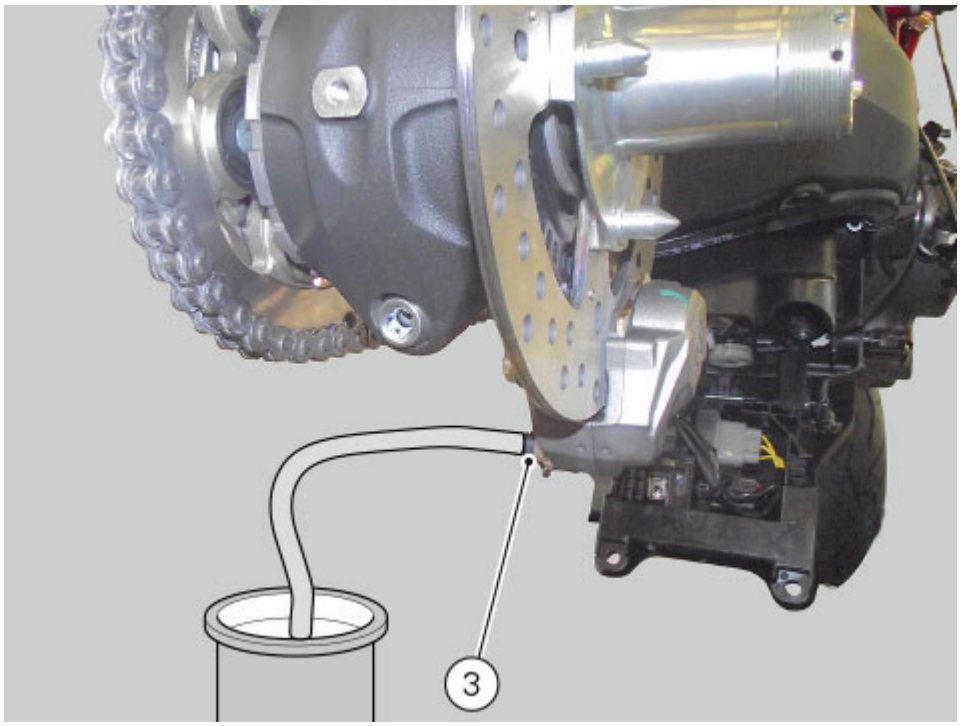

Warning
After draining the old fluid from the reservoir and while filling the system, always keep the fluid level above the MIN mark to avoid any air bubbles in the circuit.

Note
If bleeding tool is not available, move back calliper pistons as well.

Fill the reservoir (2) with the specified fluid taken from an intact container.

Important
During this operation, fluid level inside reservoir must remain above the MIN mark at all times. The end of the transparent plastic hose must remain immersed in the discharged fluid at all times.

Operate brake pedal and keep it pressed during the whole filling operation.

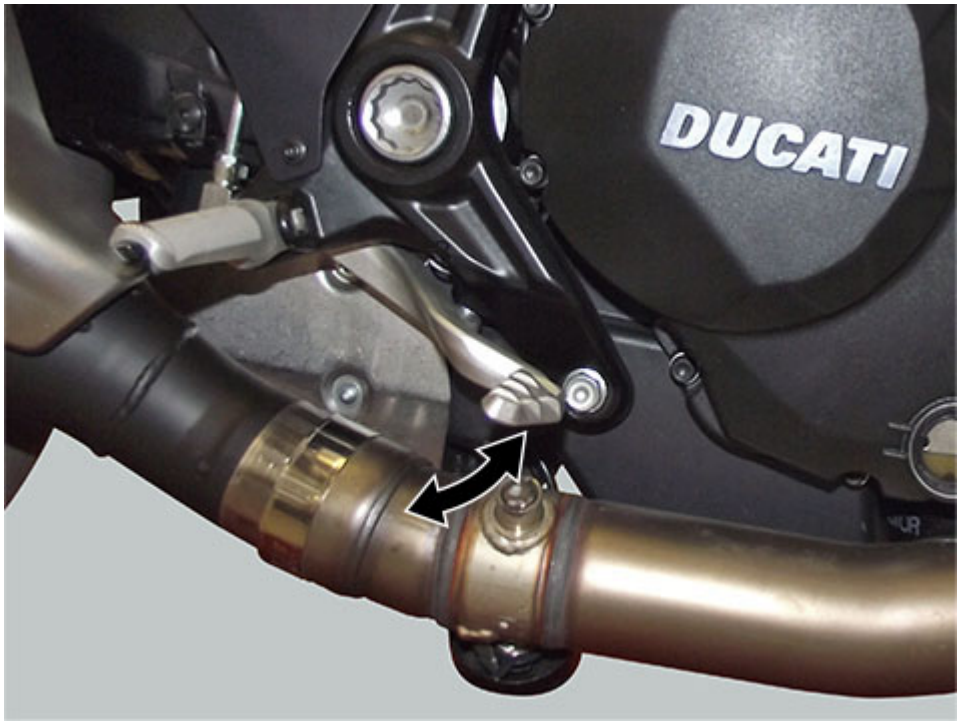

BLEEDING THE REAR BRAKE SYSTEM

Connect bleeding tool to left-hand front brake calliper bleed valve (3) or to rear brake bleed valve (8).

Note

Follow the manufacturer's instructions when using a commercial brake bleeding tool.

Suck with the bleeding tool and open the bleed valve (3) making sure that the level of the concerned reservoir does not fall below the "MIN" mark.
Continue this operation until all air is bled out of system.
Tighten bleed valve (3) to a torque of 4Nm ± 10%.
If you do not have a bleeding tool available, connect a transparent plastic tubing to the bleed valve (3) as outlined in the draining procedure.

Warning

Dispose of oil and/or filter cartridges in compliance with environmental protection regulations.

Smaltimento

Do not dispose of the exhausted fluid into the environment; do not pour the product, either new or exhausted, inside drains, water courses or the soil. Collect and deliver waste to authorized collecting centres. Dispose of waste in compliance with the prevailing local and national standards.
European Waste Catalogue Codes recommended for waste disposal as indicated by Decision No 2001/118/EC: CER 13 02 05* (Mineral-based non-chlorinated engine, gear and lubricating oils waste).

Note

It should be noted that the above-mentioned CER code is a general and non-binding provision, provided based on product original composition and intended use. The user is thus responsible for selecting the CER code most suitable to the concerned product, based on product real use and taking into account any alterations and/or contaminations of the product, as well as any amendments to the prevailing standard on waste disposal.

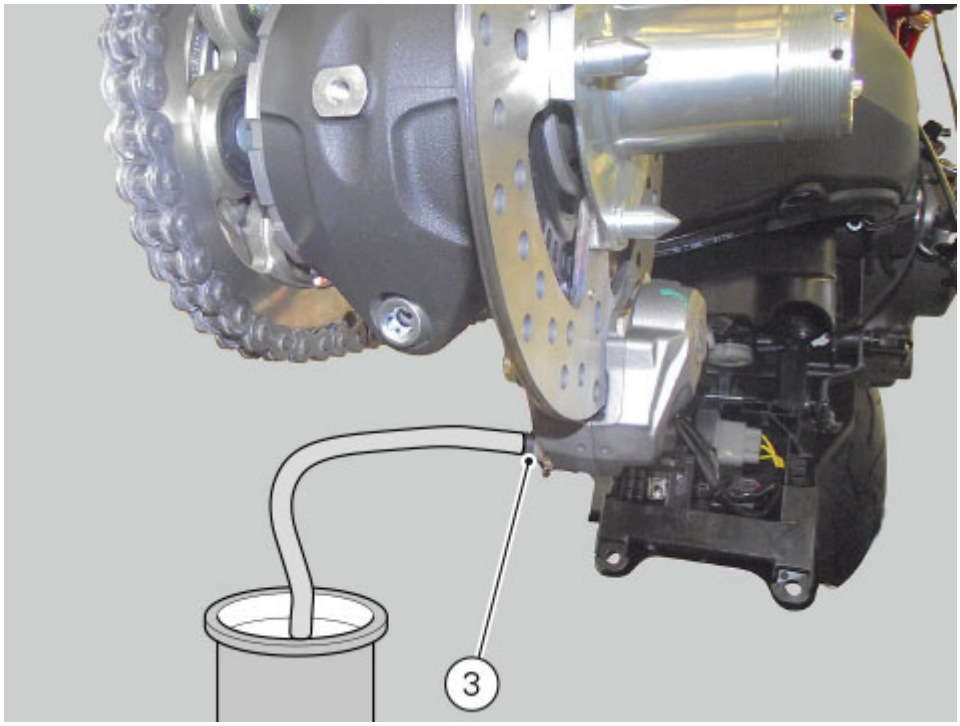

Press pedal to make half stroke or until system is pressurised, open bleed valve and let pedal make full stroke; tighten bleed valve to the specified torque and release pedal.

Important

Do not release the brake pedal until the bleed valve has been fully tightened.

Repeat the operation until the fluid inside system is free of air bubbles.
Make sure that, with bleed valve duly closed, pressure is correctly developed through brake pedal.
Tighten bleed valve (3) to a torque of 4Nm ± 10%, and fit protective cap.

Level fluid and refit cover (1) on reservoir (2).

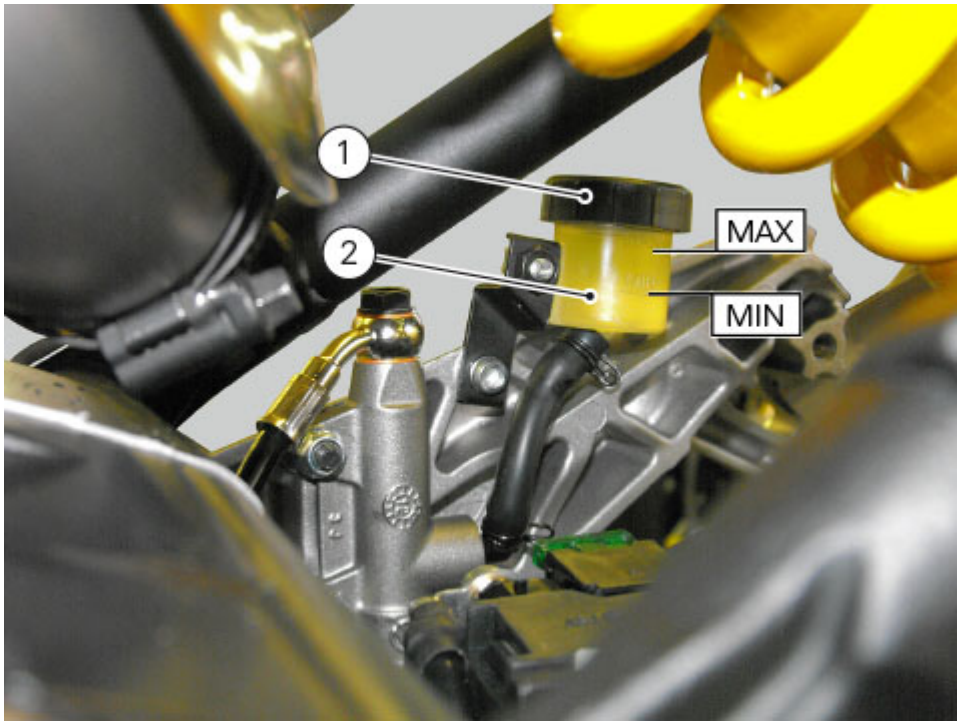

Changing the fluid in the front brake system

Warning

Brake fluid is corrosive and will damage paint. Avoid contact with eyes and skin. In case of accidental contact, wash thoroughly with water.

Remove the cover (1) with membrane from the front brake fluid reservoir (2) by undoing the screws (3).
Siphon the fluid from the reservoir (2).
Refit the membrane (without the plug) on the reservoir to avoid brake fluid splashes during the following operations.

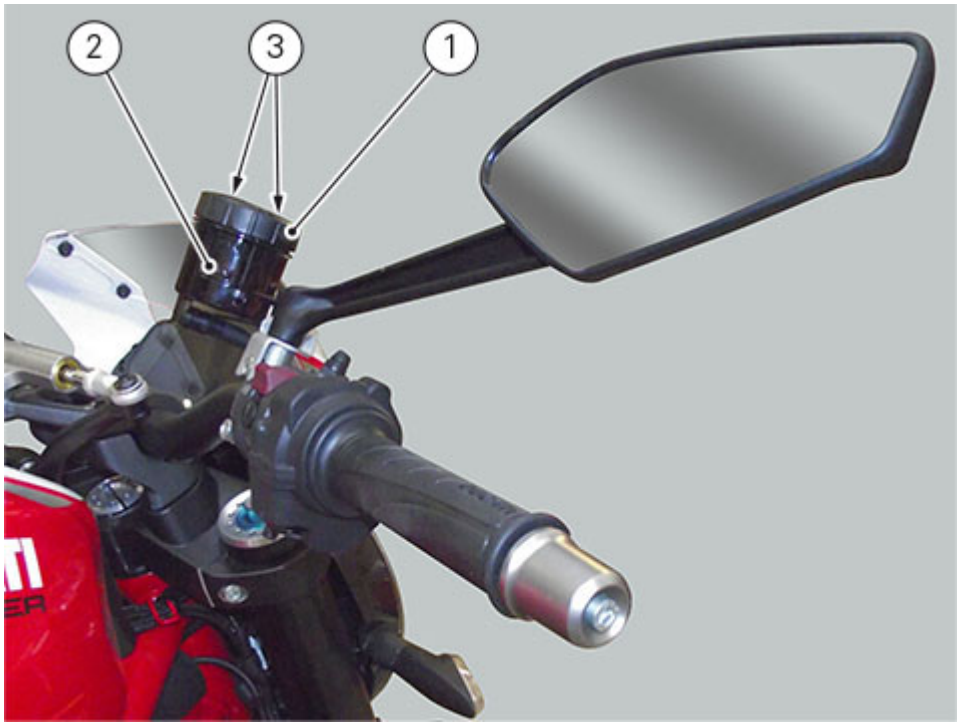

Move the brake calliper pistons back: to carry out this operation undo the fixing screws (4) of the callipers on the fork bottom end and push both pads of every calliper, taking them apart; during this operation, be careful with the fluid level, which must always be sucked out each time it flows back in the reservoir.





Once that all pistons of both callipers are fully moved back and that all the fluid in the tank has been sucked out, connect to the right-hand calliper bleed valve (5) a transparent tube by immersing the end in a container placed on the floor.



Fill the reservoir (2) with new oil up to the "MAX" mark.

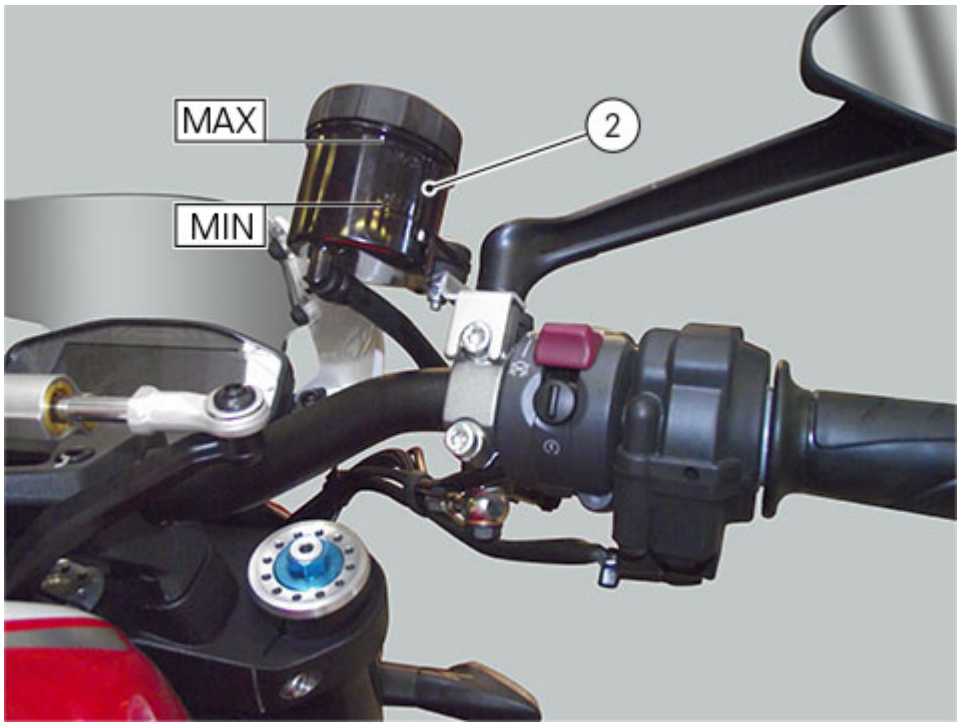

Pull the lever to make a 20 - 30 mm stroke and keep the lever in this position using a non-elastic clamp.



Loosen the bleed valve of the left-hand calliper (5) and then take the lever through the whole stroke to allow fluid to flow out.
The lever is resting against the handgrip.

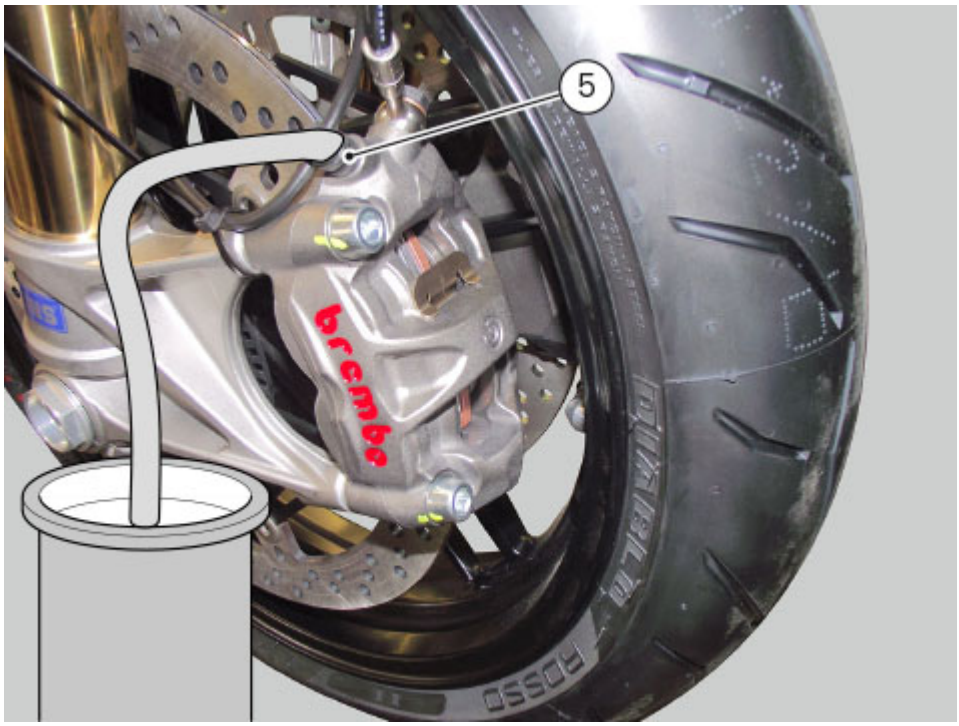

Tighten the bleed valve (5) to a torque of 4Nm ±10% and then release the lever.
Repeat the above operation until the old fluid flows out completely.
Then, with the bleed valve definitely closed to the specified torque actuate repeatedly the lever until a pressure is detected in the brake system.

Warning
After draining the old fluid from the reservoir and while filling the system, always keep the fluid level above the MIN mark to avoid any air bubbles in the circuit.

To finish bleeding the entire ABS system, after the standard bleeding procedure of the just-described front braking system and after "Changing the fluid in the rear brake system", perform the "Bleeding the ABS hydraulic system".

Note
With this procedure, the front brake system callipers are still filled with fluid; if callipers have to be drained as well, move back calliper pistons by keeping the bleeding tool (if available) working and connected to bleed valve.

Warning
Dispose of oil and/or filter cartridges in compliance with environmental protection regulations.

Note
It should be noted that the above-mentioned CER code is a general and non-binding provision, provided based on product original composition and intended use. The user is thus responsible for selecting the CER code most suitable to the concerned product, based on product real use and taking into account any alterations and/or contaminations of the product, as well as any amendments to the prevailing standard on waste disposal.

Smaltimento
Do not dispose of the exhausted fluid into the environment; do not pour the product, either new or exhausted, inside drains, water courses or the soil. Collect and deliver waste to authorized collecting centres. Dispose of waste in compliance with the prevailing local and national standards.
European Waste Catalogue Codes recommended for waste disposal as indicated by Decision No 2001/118/EC: CER 13 02 05* (Mineral-based non-chlorinated engine, gear and lubricating oils waste).

BLEEDING THE FRONT BRAKE SYSTEM

Fill the reservoir (2) with the specified fluid taken from an intact container.

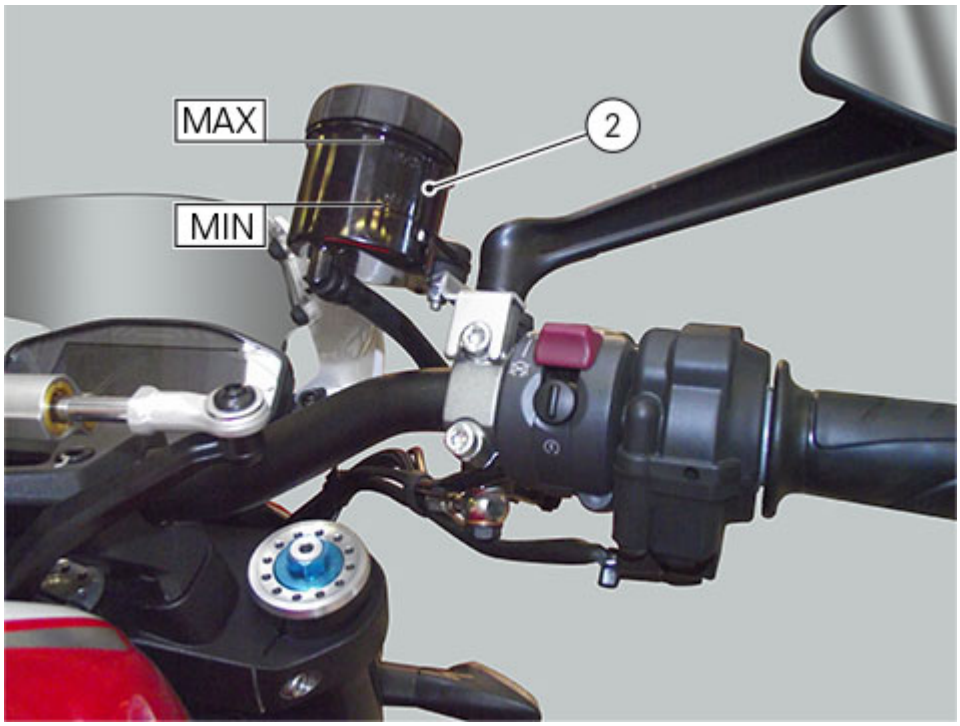

Important

During this operation, fluid level inside reservoir must remain above the MIN mark at all times. The end of the transparent plastic hose must remain immersed in the discharged fluid at all times.

Operate brake lever or pedal and keep them operated during the whole filling operation.



Connect bleeding tool to left-hand front brake calliper bleed valve (5).

Note

Follow the manufacturer's instructions when using a commercial clutch bleeding tool.

Suck with the bleeding tool and open the bleed valve (5) making sure that the level of the concerned reservoir does not fall below the "MIN" mark.
Continue this operation until all air is bled out of system.
Tighten bleed valve (5) to a torque of 4Nm ± 10%.
If you do not have a bleeding tool available, connect a transparent plastic tubing to the bleed valve (5) as outlined in the draining procedure.

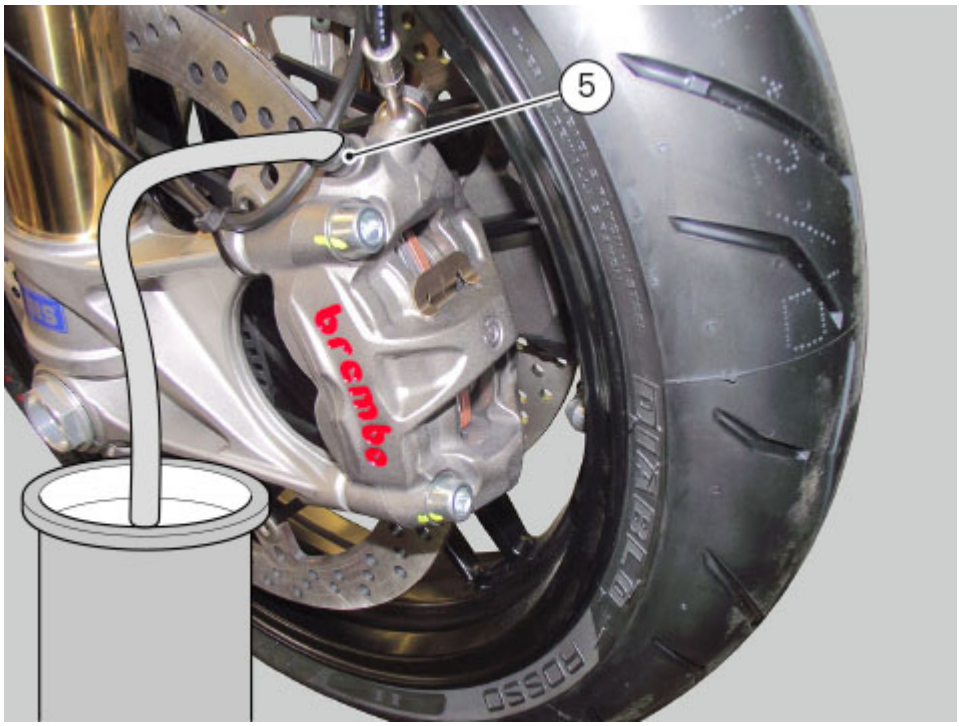

Operate the lever to make half stroke or until system is pressurised, open bleed valve and let lever make full stroke; tighten bleed valve to the specified torque and release lever.

Important
Do not release the brake lever until the bleed valve has been fully tightened.

Repeat the bleeding operation until the fluid inside system is free of air bubbles; once filling is completed, proceed to bleeding by working on all system valves, one at a time.
Then repeat bleeding procedure on right-hand front calliper valve (5).



In particular, to completely eliminate any air possibly trapped at the highest point of the front brake master cylinder, perform the same procedure on the bleed valve (6), after having loosened nut (7) and connected bleeding tool to the transparent plastic tubing, as outlined in the draining procedure.

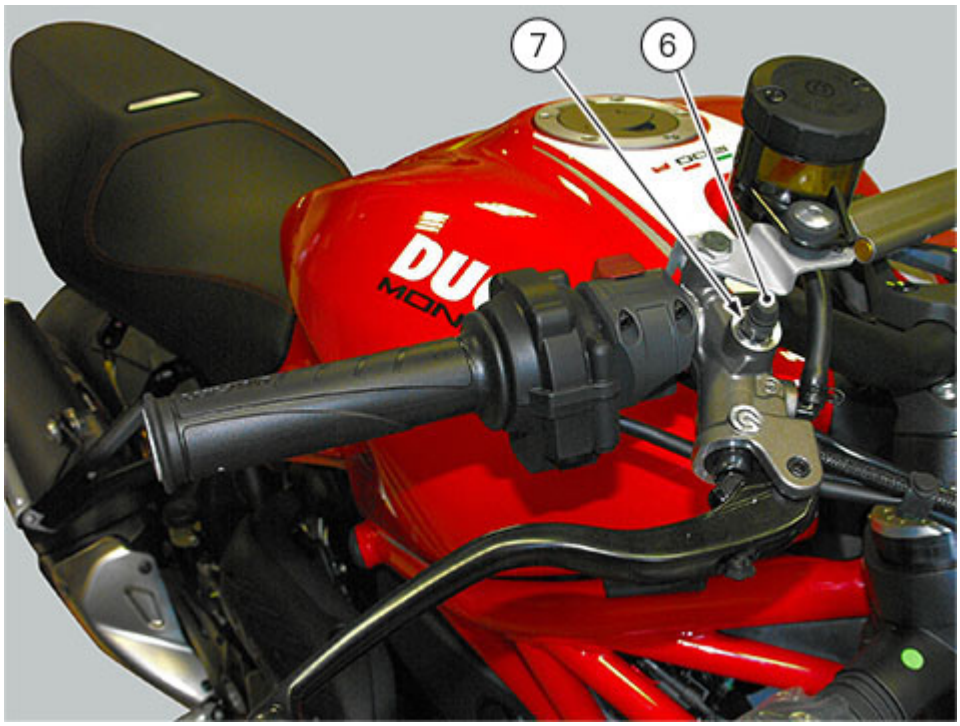

Make sure that, with bleed valves duly closed, pressure is correctly developed through brake lever or pedal.
Tighten bleed valves (5) and nut (7) to a torque of 4Nm ± 10%, and fit protective cap.
Level fluid and refit cover (1) by tightening screws (3) on reservoir (2).

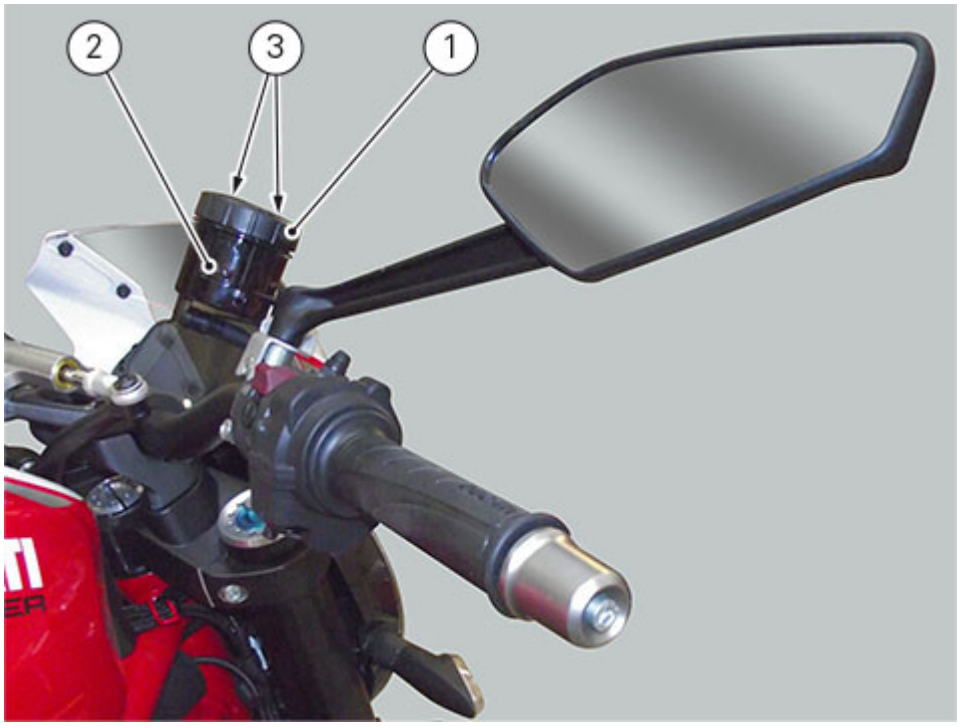

Change coolant

Warning

Make sure the engine is cold before proceeding. Attempting to change the coolant with the engine hot could lead to burns from hot coolant or scalding steam.

If necessary, remove coolant tank cover, on vehicle right side.
Loosen screw (A) and keep spacer (B), sliding cover (C) out of frame tabs (D).

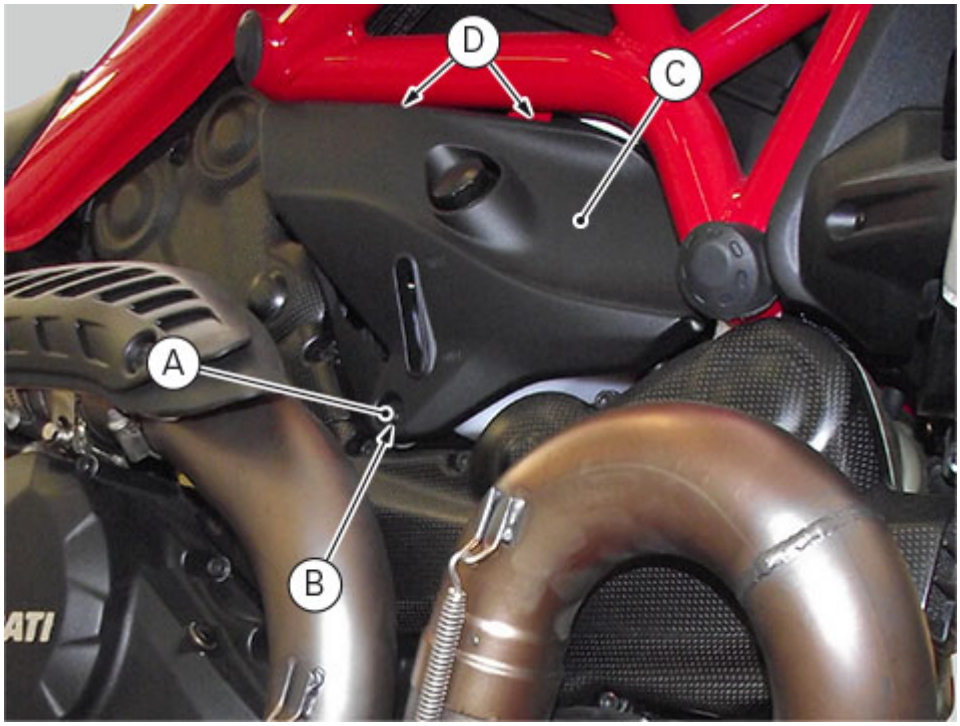

Place a container under the engine and set the motorcycle on its side stand.
Remove the expansion reservoir filler plug (1).

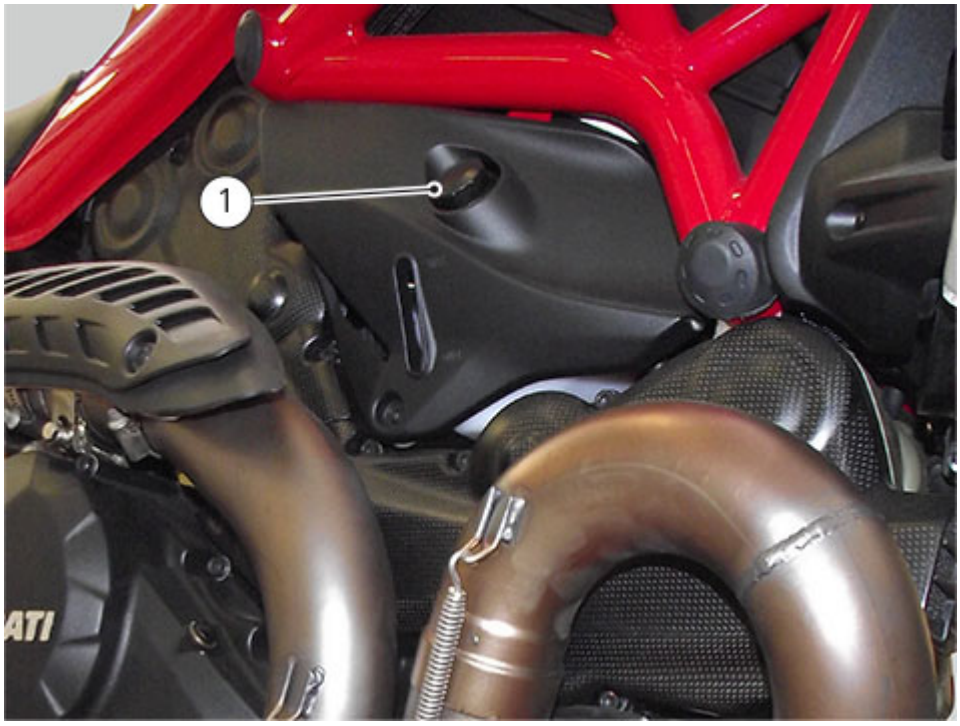

Loosen radiator plug (2) and remove cover (3).

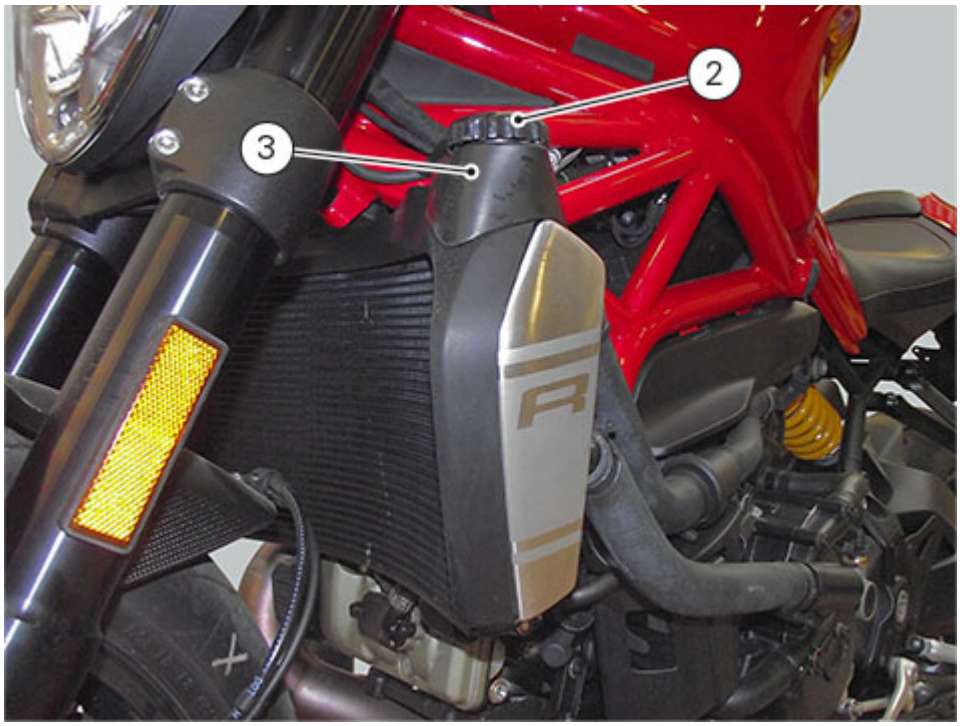

Slide out clamp (4), disconnect hose (5) and allow all coolant to drain in a container.

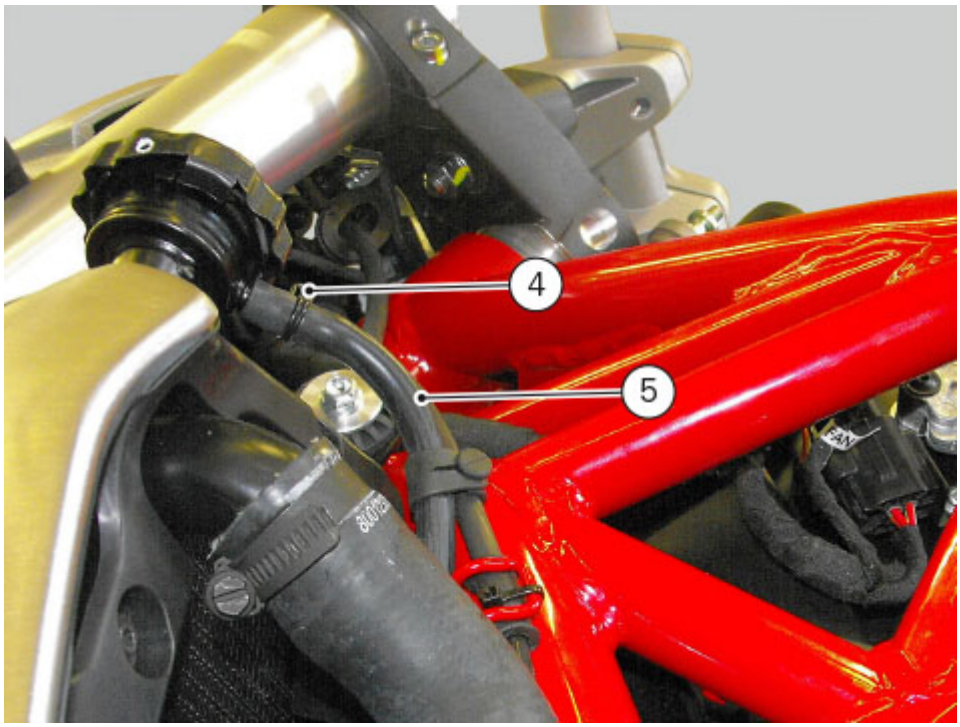

Loosen plug (6) from fluid drain hole located on the pump cover.
Allow the coolant to drain off completely.
Screw plug (6) in the fluid drain hole with a new seal.
Tighten plug (6) to a torque of 20Nm ± 10%.

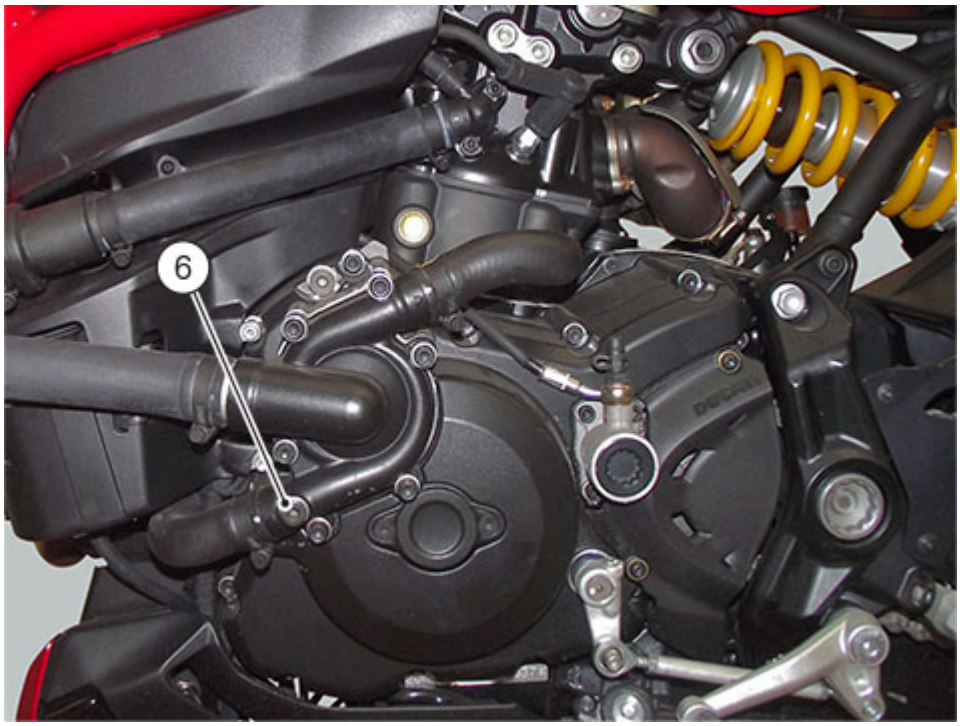

Insert hose (5) and secure it to radiator with clamp (4).

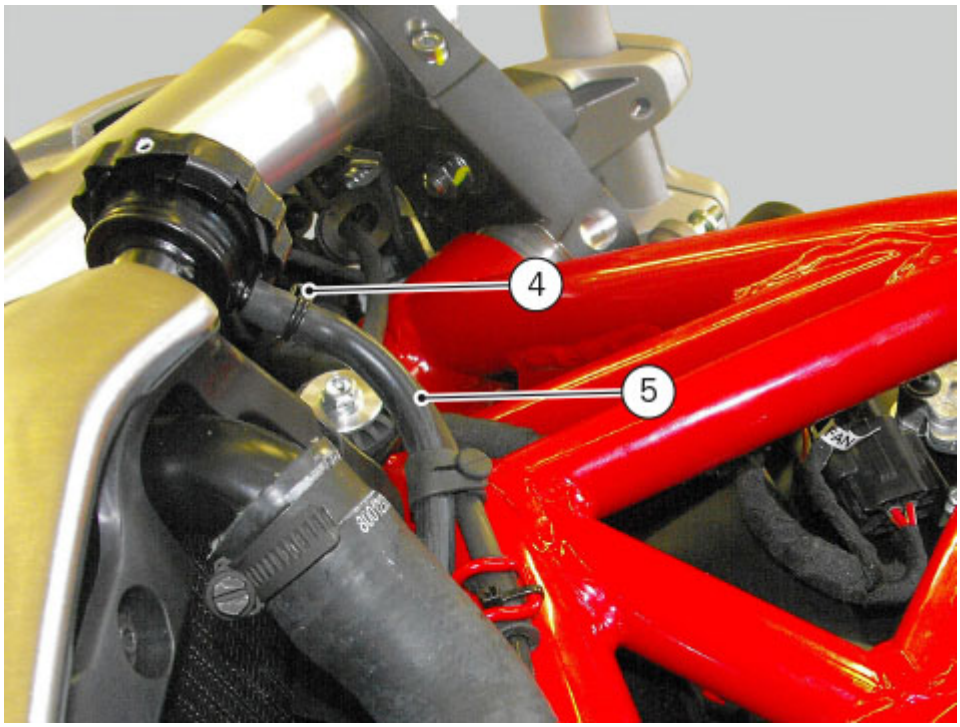

Fill the circuit with new coolant through radiator filler plug inlet.
Wait several minutes for the coolant to fill all the internal passages.
Start the engine and wait for the coolant to reach 110 °C; run the engine for about 10 minutes.
Stop the engine and allow it to cool down so that all the air is expelled from the circuit.

Warning
Keep your hands, clothing and tools well clear of the radiator fan at all times; this fan starts automatically without warning and could cause serious injury or damage.

Important
Check the circuit for possible leaks.

Top up the coolant through the expansion reservoir filler to bring the level up to the "MAX" mark.
Tighten the plug (1) of the expansion reservoir.

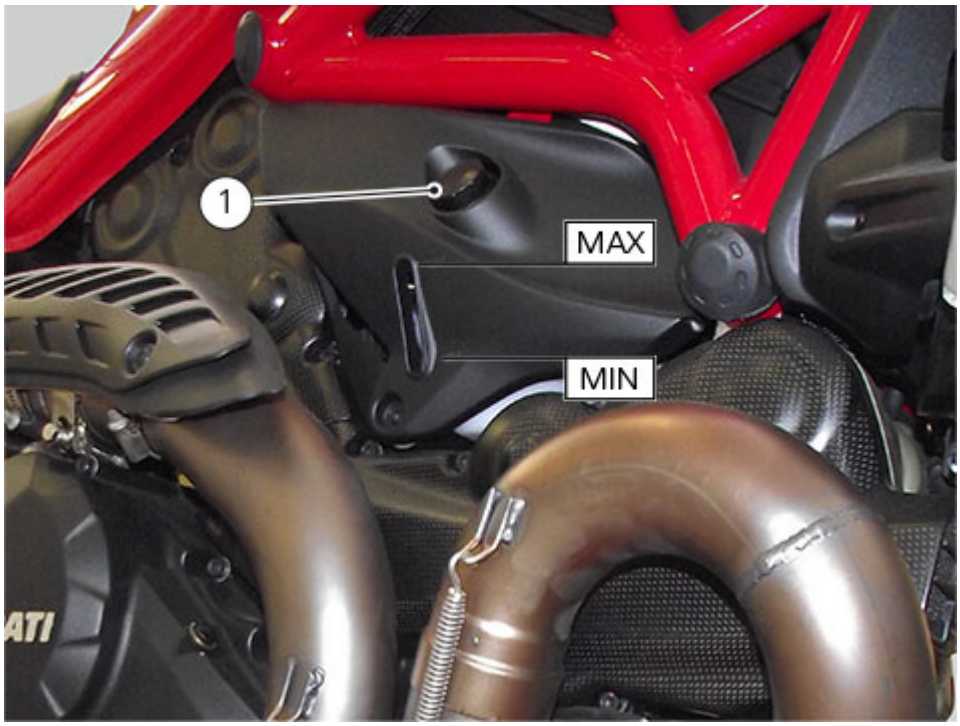

Warning

Do not dispose of coolant into the environment.

Smaltimento

Do not dispose of the waste into the environment; do not pour the product, either new or exhausted, inside drains, water courses or the soil. Collect and deliver waste to authorized collecting centres.
Dispose of waste in compliance with the prevailing local and national standards.
European Waste Catalogue Codes recommended for waste disposal as indicated by Decision No 2001/118/EC: CER 16 01 14* (Antifreeze fluids containing dangerous substances).

Note

It should be noted that the above-mentioned CER code is a general and non-binding provision, provided based on product original composition and intended use. The user is thus responsible for selecting the CER code most suitable to the concerned product, based on product real use and taking into account any alterations and/or contaminations of the product, as well as any amendments to the prevailing standard on waste disposal.

If previously removed, refit coolant tank cover (C), locking it inside frame tabs (D).
Position spacer (B) behind cover, and tighten screw (A) to a torque of 1Nm ± 10%.

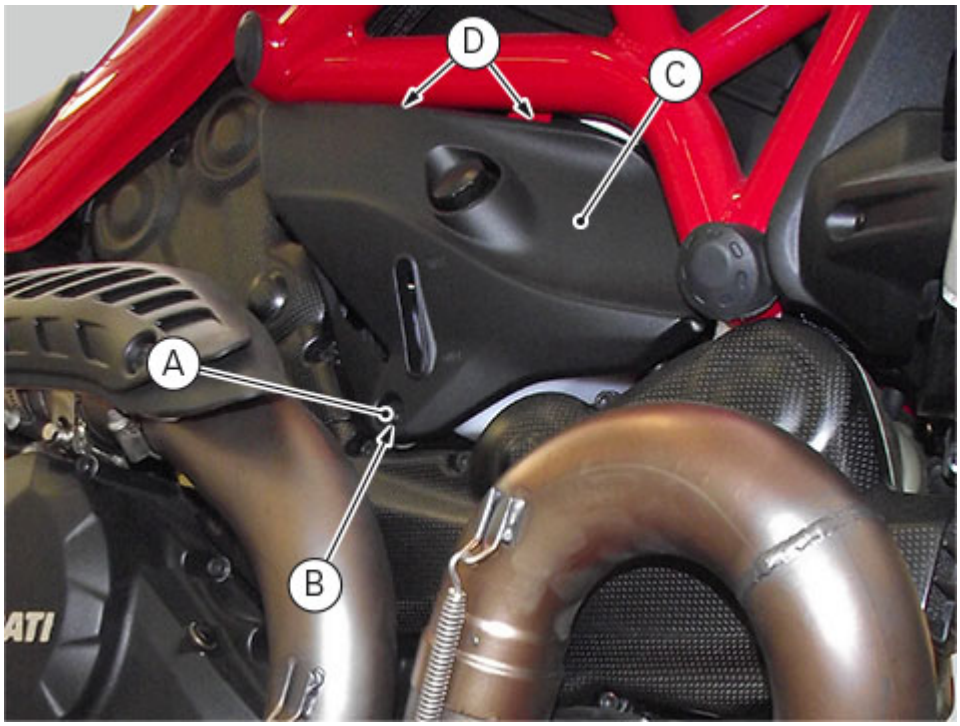
D
C
A
B

Checking coolant level

At the intervals specified in the "Scheduled maintenance chart: Operations to be carried out by the Dealer and Operations to be carried out by the Customer" check the coolant level inside the expansion reservoir, on the right-hand side of the vehicle.
The coolant level must be between the "MAX" and "MIN" marks on the reservoir.
If the level is low, top up with the recommended coolant.
Remove the filler plug (1) and top up with new coolant to the specified level.
Refit the plug (1).

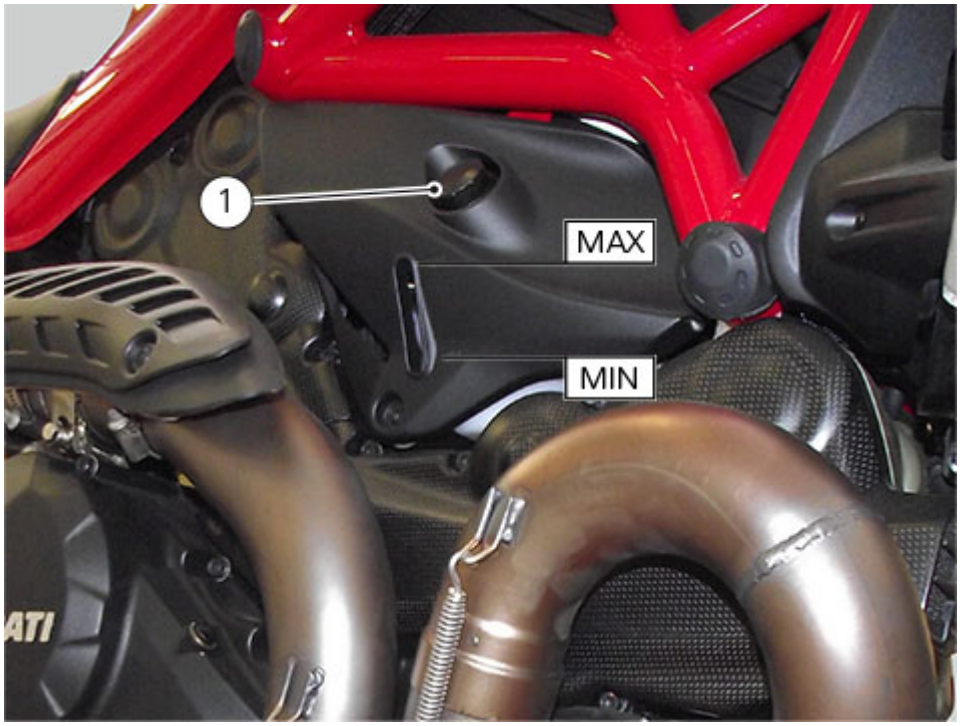

For optimal operating conditions (coolant mixture starting to freeze at 20 °C), the recommended coolant should be mixed with water in the following percentages:
ANTIFREEZE: 35÷40% of the volume;
WATER: 65÷60% of the volume.

Important
Very hard water with a high mineral salt content can damage the engine.
Increase the amount of antifreeze to up to 55% volume in the case of very cold climates.

Important
Solutions with less than **30%** of antifreeze will not provide sufficient protection against corrosion.

Changing and cleaning the air filters

The air filter must be replaced at the intervals specified in the "Scheduled maintenance chart: Operations to be carried out by the Dealer and Operations to be carried out by the Customer".

Remove the seat (Removing the seat).
Remove the fuel tank (Removing the fuel tank).

Loosen the three screws (1) and slide out air filter (2) complete with cover (3).
Slide out and separate cover (3) from air filter (2).

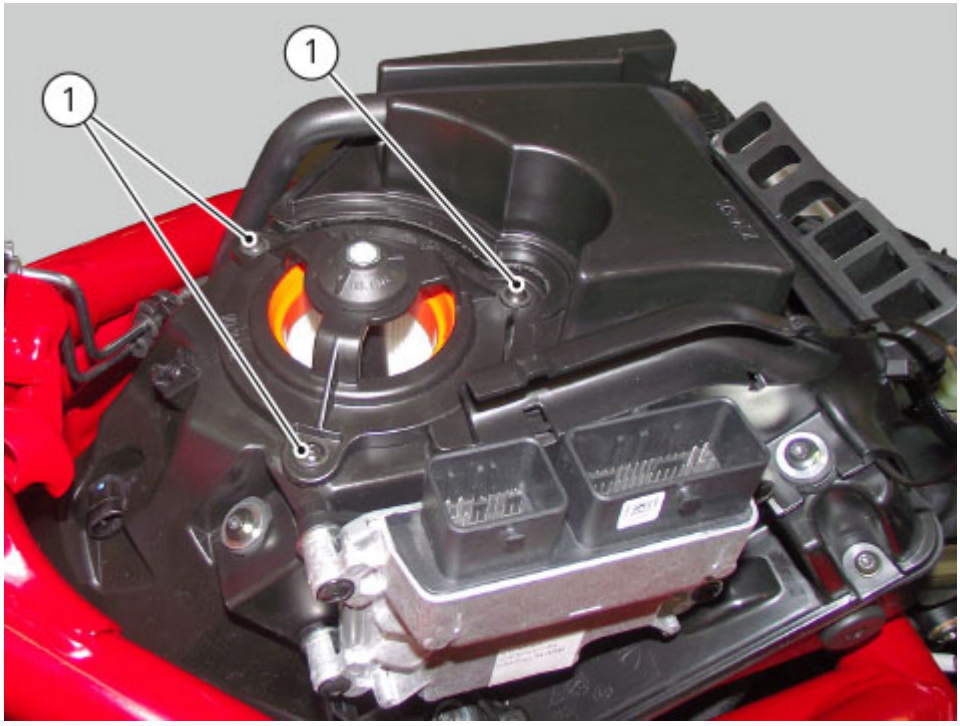



The filter can be cleaned with a jet of compressed air or replaced, if necessary.

Important
A clogged air filter will reduce air intake and engine power, increase fuel consumption and cause a build up of deposits on the spark plugs. Do not use the motorcycle without a filter as impurities in the air could get into the engine and cause damage.

Duly refit filter (2), pre-assembled with cover (3), inside its seat on airbox.
Start screws (1) and tighten them to a torque of 3Nm±10%.

Important
If the motorcycle is used in very damp or dusty conditions, the air filter cartridge must be changed more frequently.

Remove primary pipes from horizontal and vertical head exhaust pipes (Removing the exhaust system).
Remove horizontal head timing cover (Removing the timing belt external covers).

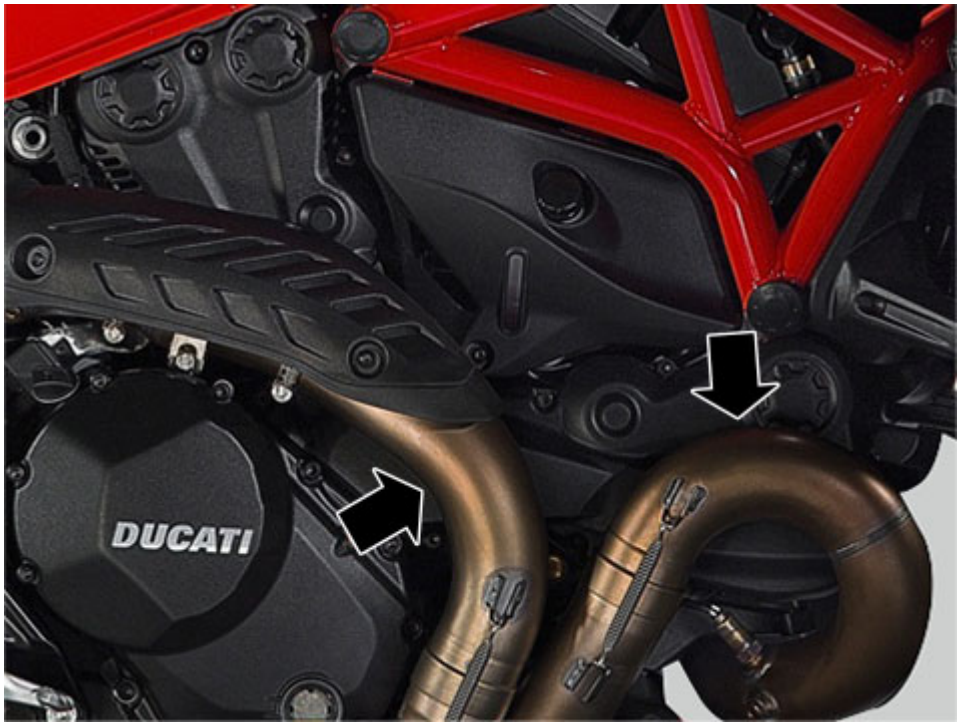

Loosen the screws (7) and remove the filter (4).
Check air filter (4).
Once the check has been carried out, refit filter (4), start (without tightening) screws (7) and refit the horizontal timing belt cover (5) on the horizontal piston-cylinder assembly by tightening screws (6) to a torque of 10Nm (MIN 9Nm - MAX11 Nm) for plastic covers and of 6 Nm (MIN 5.5Nm - MAX 6,5Nm) for carbon covers.

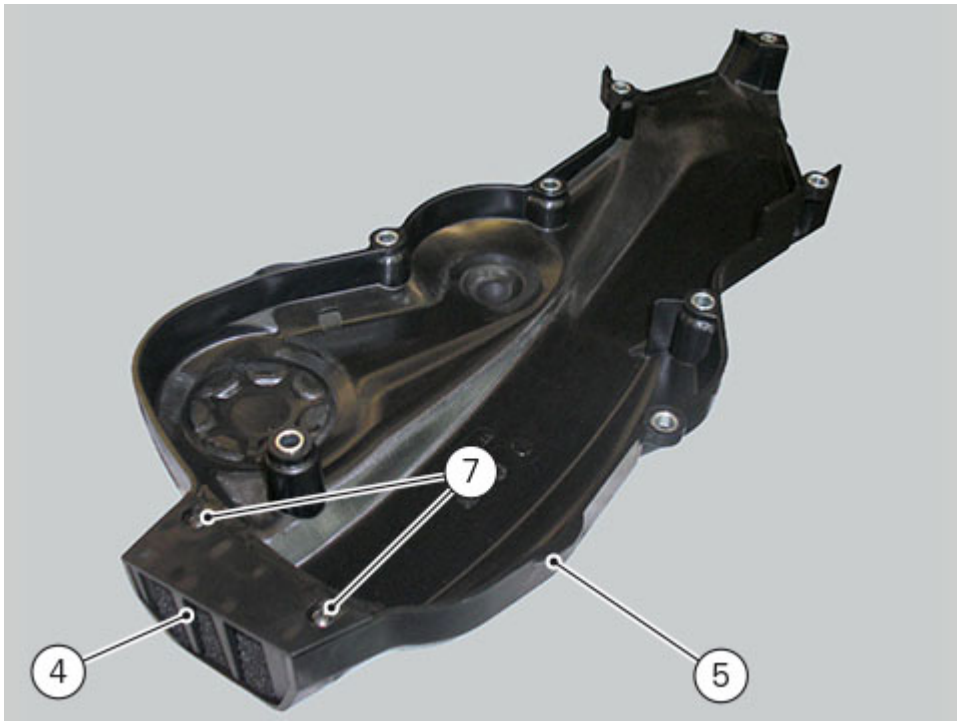

Note
Do not dispose of replaced filters into the environment.



Smaltimento

If filtering element is replaced, do not dispose of waste into the environment. Collect and deliver waste to authorized collecting centres. Dispose of waste in compliance with the prevailing local and national standards. European Waste Catalogue Codes recommended for waste disposal as indicated by Decision No 2001/118/EC: CER 15 02 02* (Absorbents, filter materials (including oil filters not otherwise specified), wiping cloths, protective clothing contaminated by dangerous substances).



Note

It should be noted that the above-mentioned CER code is a general and non-binding provision, provided based on product original composition and intended use. The user is thus responsible for selecting the CER code most suitable to the concerned product, based on product real use and taking into account any alterations and/or contaminations of the product, as well as any amendments to the prevailing standard on waste disposal.

Refit primary exhaust pipes (Refitting the exhaust system), complete with heat guards.
Refit the fuel tank (Refitting the fuel tank).
Refit the seat (Refitting the seat).

Change spark plugs

Warning
Do not dispose of waste components into the environment.

Smaltimento
Do not dispose of waste into the environment. Collect and deliver waste to authorized collecting centres. Dispose of waste in compliance with the prevailing local and national standards. European Waste Catalogue Codes recommended for waste disposal as indicated by Decision No 2001/118/EC: CER 16 01 22 (components not otherwise specified).

Note
It should be noted that the above-mentioned CER code is a general and non-binding provision, provided based on product original composition and intended use. The user is thus responsible for selecting the CER code most suitable to the concerned product, based on product real use and taking into account any alterations and/or contaminations of the product, as well as any amendments to the prevailing standard on waste disposal.

Check the colour of the ceramic insulation around the central electrode: an even, light brown colour indicates the engine is in good condition and running at the right temperature.
Check central electrode for wear.

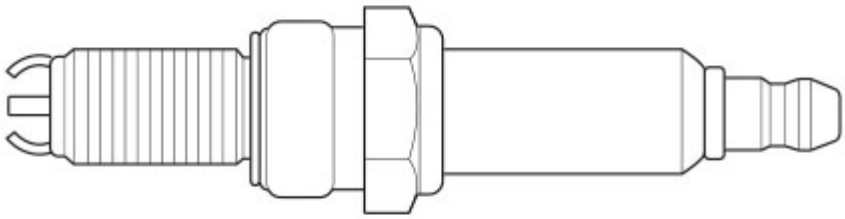

Warning
Do not use spark plugs with inadequate heat rating or incorrect thread length.
The spark plug must be securely installed.
If a spark plug is loose, it can overheat and damage the engine.

Spark plug type
Make: NGK
Type: MAR9A-J

Remove the seat (Removing the seat).

To reach vertical head spark plugs, lift tank as described in "Removing the fuel tank".

Slide caps (9) out of vertical head.

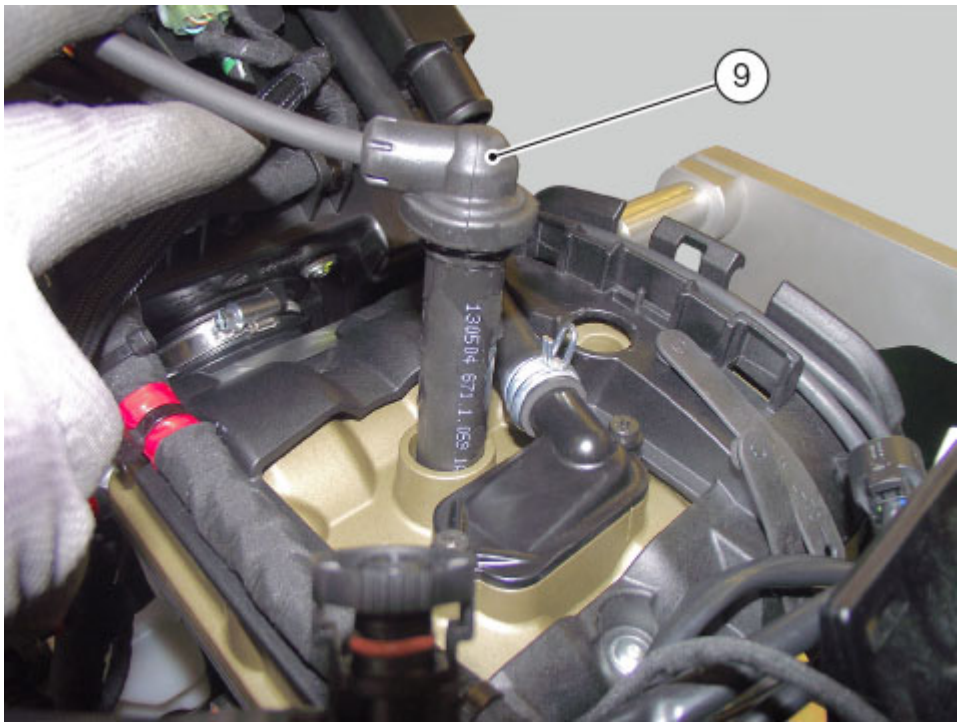

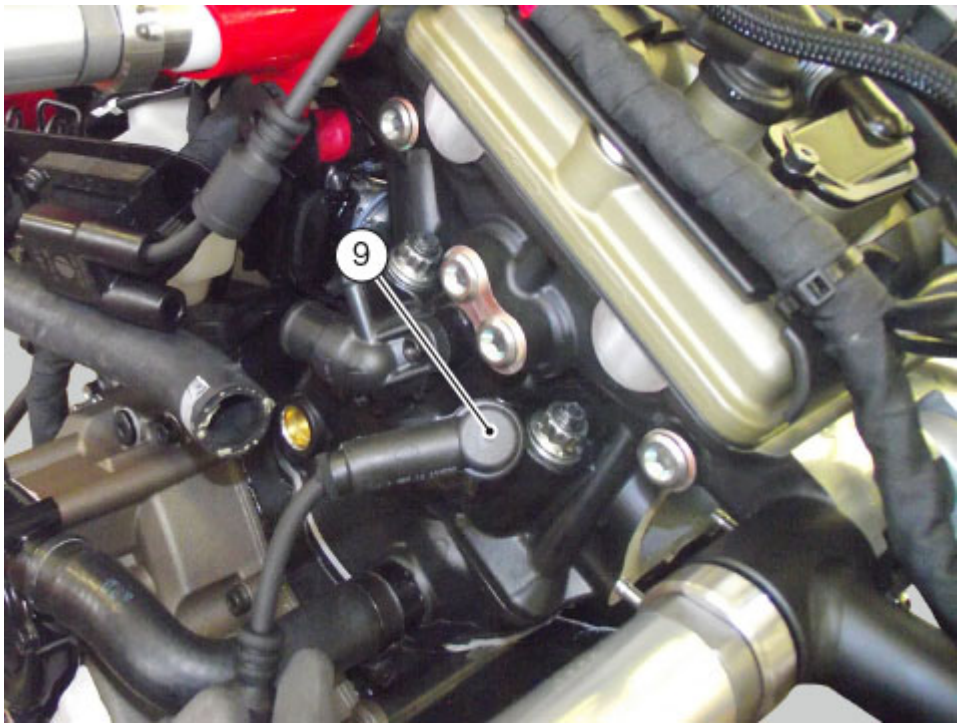

To reach horizontal head spark plugs, loosen threaded pin (10) securing water radiator, working on both sides, and slightly moving it towards forks.

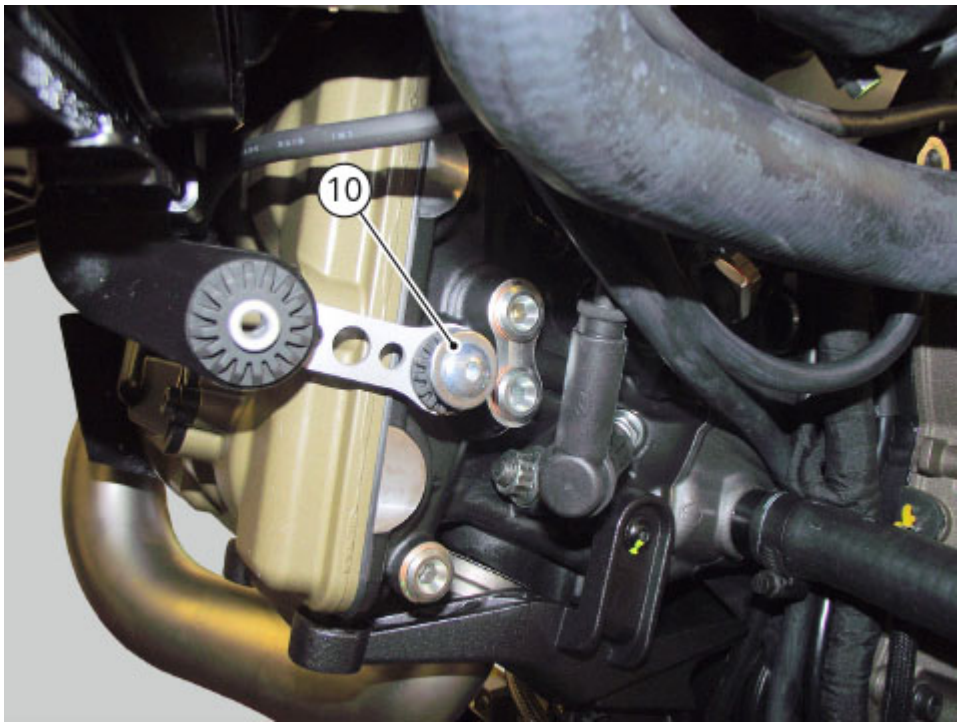

Slide caps (11) out of horizontal head.

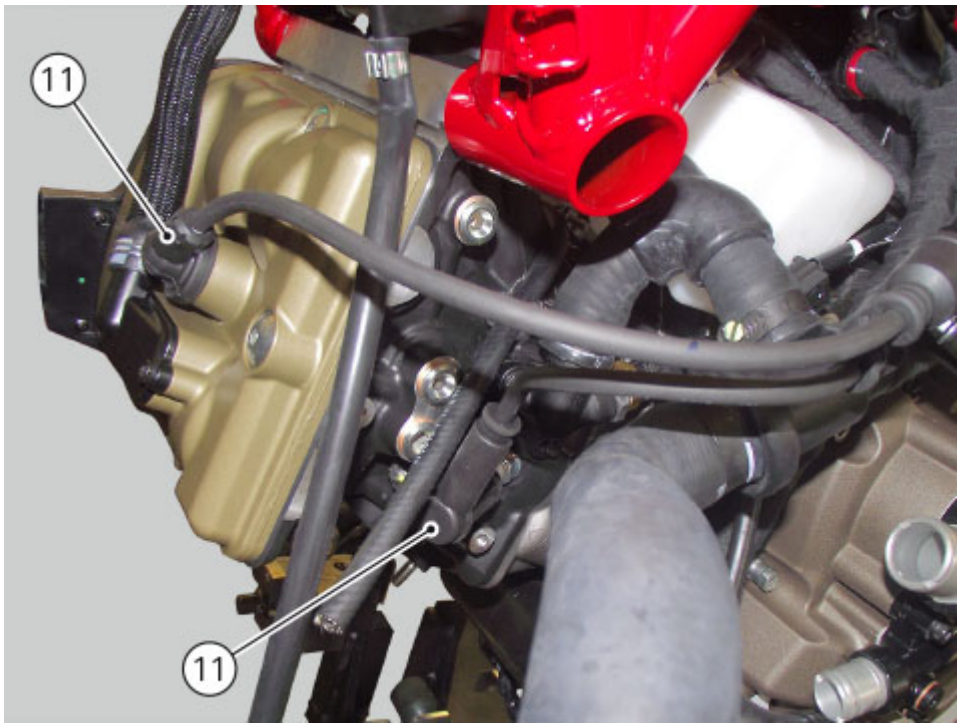

Use tool part no. **88713.2877** to replace spark plugs, and tighten them to a torque of 12 Nm (Min. 11 Nm - Max. 13 Nm).

Position caps (9) and (11) inside their seats.
Work in the same way on both heads.

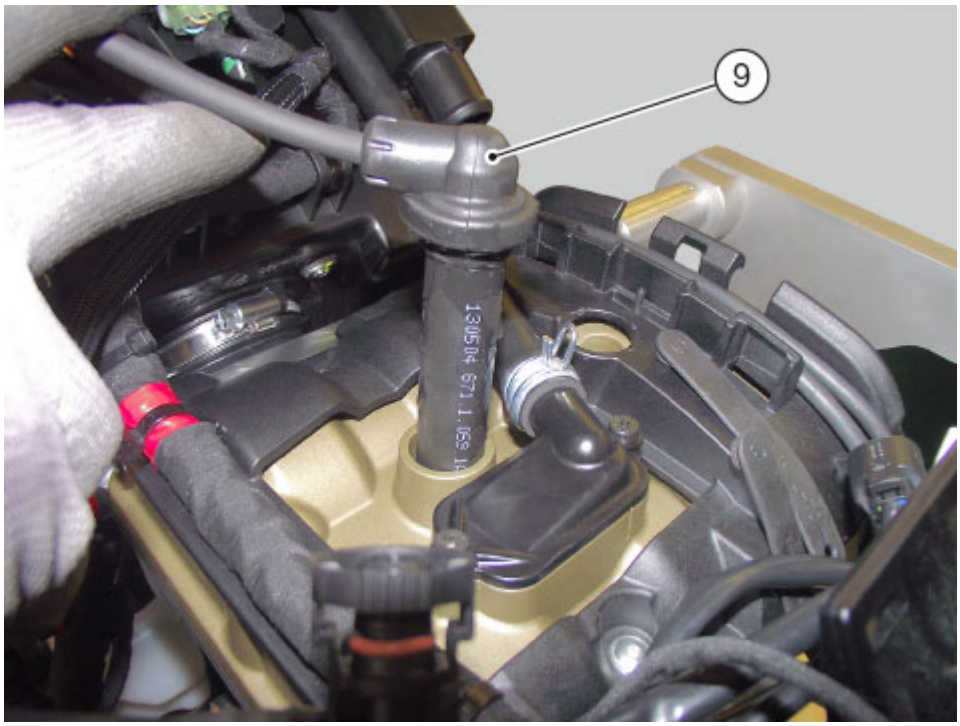
9


11
11

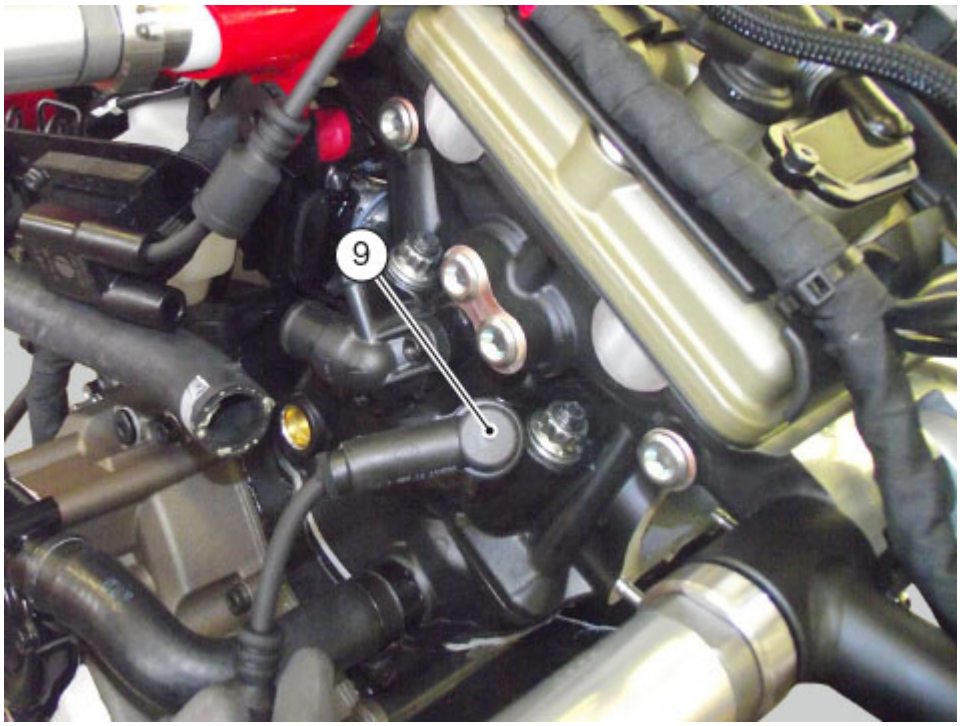

Secure water radiator to support by starting and tightening threaded pins (10) to a torque of 5 Nm ± 10%.

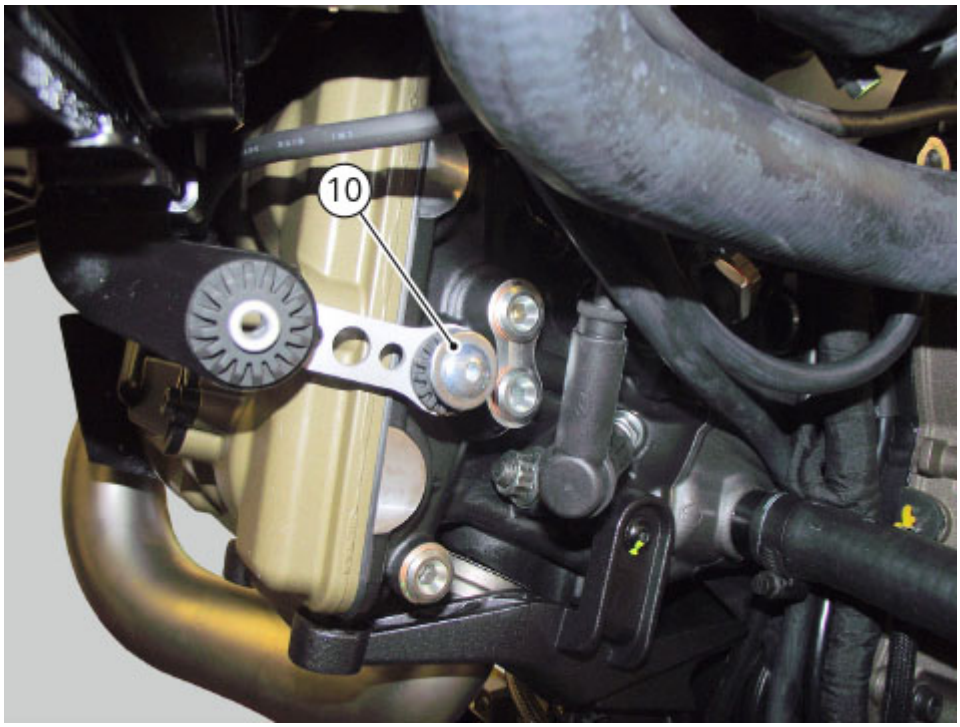

Refit the fuel tank (Refitting the fuel tank).
Refit the seat (Refitting the seat).

Change timing belts

To replace the timing belts follow the procedure described under paragraphs "Removing the mobile tensioner/timing belt" and "Refitting the timing belts".

Checking valve clearance

To check valve clearance, it is necessary to have access to the cylinder head covers and then remove the components listed below.

Remove the seat (Removing the seat).
Remove the vertical head central exhaust pipe (Removing the exhaust system).
Remove the fuel tank (Removing the fuel tank).
Remove the airbox (Removing the airbox and throttle body).
Remove the timing belt covers (Removing the timing belt external covers).
Remove the vertical head cover (Removing the camshafts)
Disconnect caps from coils on both heads.

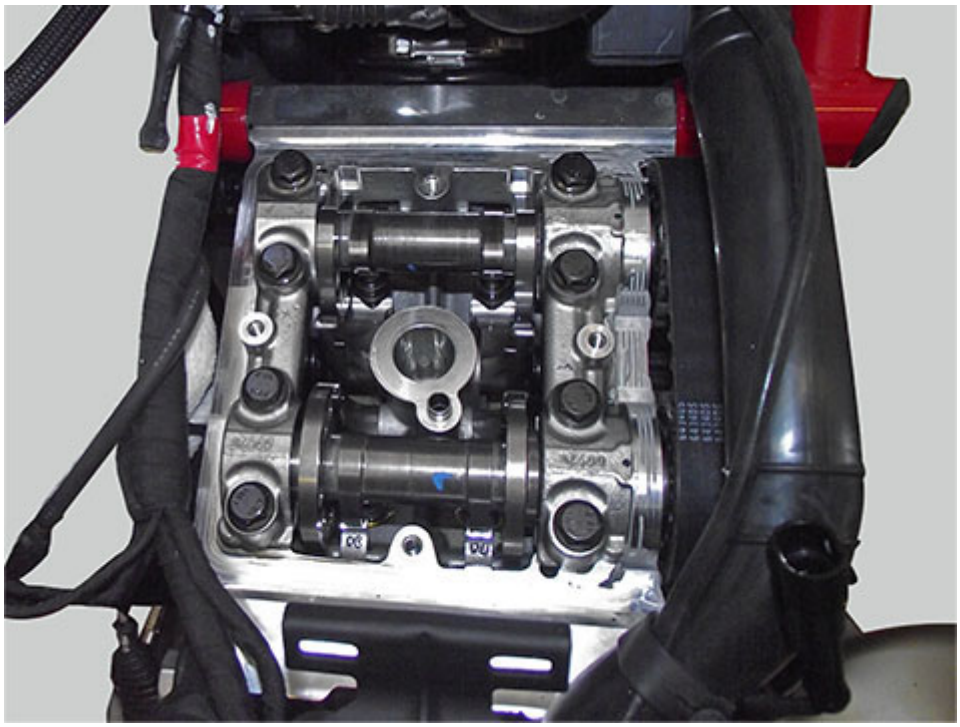

Loosen the water radiator retaining screws by leaving the radiator connected to the cooling system (Removing the water radiator).
Remove water radiator from LH side fastener.
Remove the horizontal head cover (Removing the camshafts).

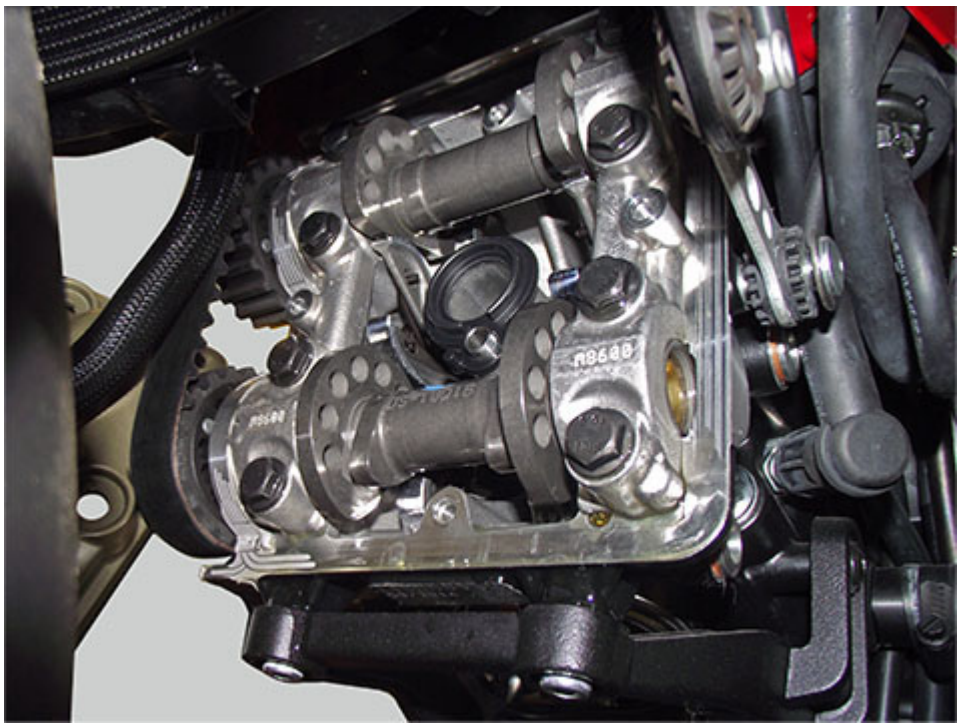

Note
For clarity, the figures show the engine removed from the frame.

Loosen the two screws (1) retaining cover (2) and remove them together with gasket (3).

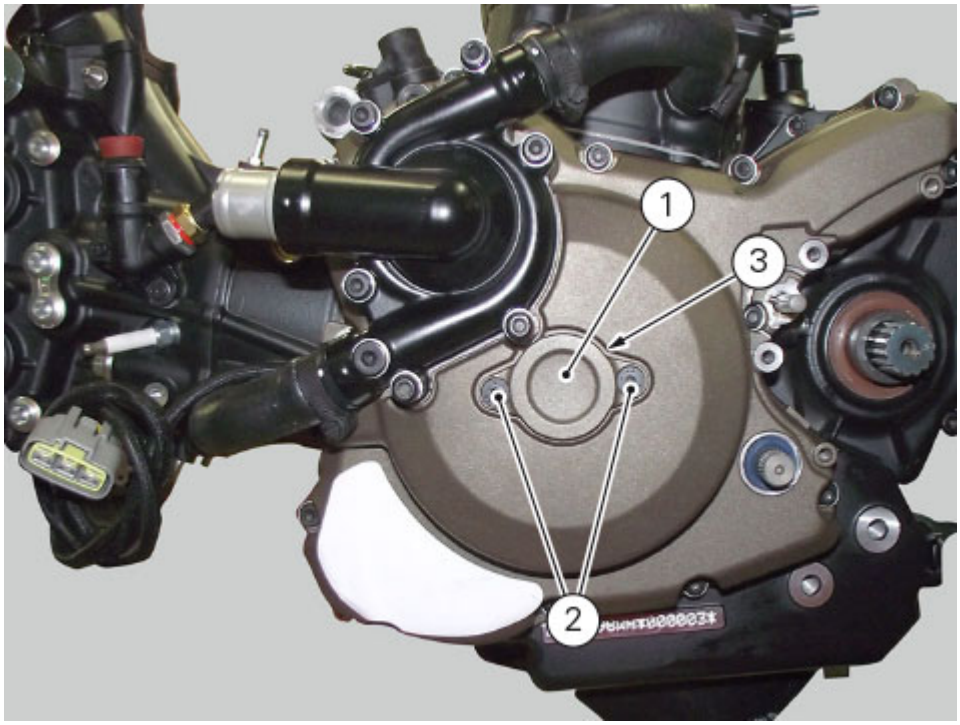

Fit the tool handgrip no. **88713.0123** in the holes of the generator cover to be able to turn the crankshaft so that the valve on which the check is carried out is in rest position and the relevant piston at the top dead centre.

Check the valve clearance of the head you are working on.

Checking the opening clearance

Using a feeler gauge, check the clearance between the opening rocker arm (A) and the lowest point of the camshaft lobe (B), taking care not to compress the rocker arm return spring.

Important
Hold the feeler gauge at a distance of at least 4-5 cm from the point of measurement between cam and rocker arm.

Important
During this operation, press on the camshaft perpendicularly to the head surface to keep it in seat.

The value must be within the prescribed ones (Timing system/valves).

	Reference	Assembly value	Check value every 24,000 km
Valve clearance	Opening rocker arm - intake	0.13÷0.18 mm	0.10÷0.25 mm
	Opening rocker arm - exhaust	0.13÷0.18 mm	0.10÷0.25 mm

If not so, remove the opening shim (4) (Removing the valves), and replace it with one of suitable height to obtain the prescribed clearance.

Note
Opening rocker arm shims measuring 1.80 to 3.45 are available as spare parts: the size is punched on the shim.

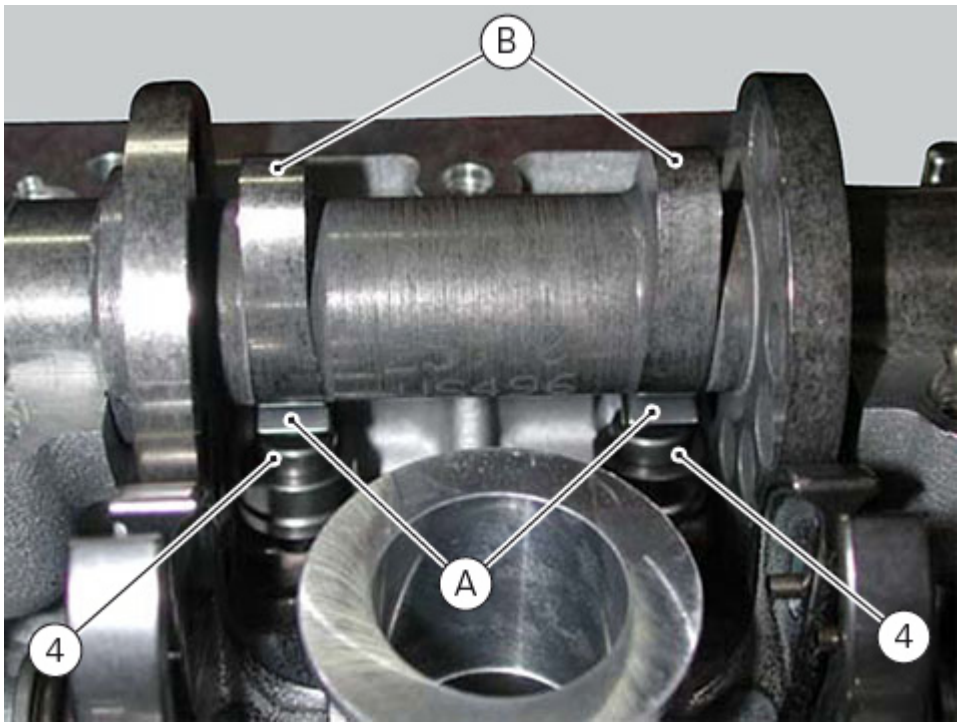
B
A
4
4





Checking the closing clearance

Using a feeler gauge, check the clearance between the closing rocker arm (C) sliding shoe and the highest point of the camshaft lobe (D).

Important
Hold the feeler gauge at a distance of at least 4-5 cm from the point of measurement between cam and rocker arm.

Important
During this operation, press on the camshaft perpendicularly to the head surface to keep it in seat.

The value must be within the prescribed ones (Timing system/valves).

	Reference	Assembly value	Check value every 24,000 km
Valve clearance	Closing rocker arm - intake	0.05÷0.10 mm	0.05÷0.15 mm
	Closing rocker arm - exhaust	0.05÷0.10 mm	0.05÷0.15 mm

If not, remove the closing shim (5), as described in paragraph (Removing the valves), and replace it with one of suitable height to obtain the prescribed clearance.

Note
Closing rocker arm shims measuring 2.2 to 4.5 are available as spare parts: the size is punched on the shim.

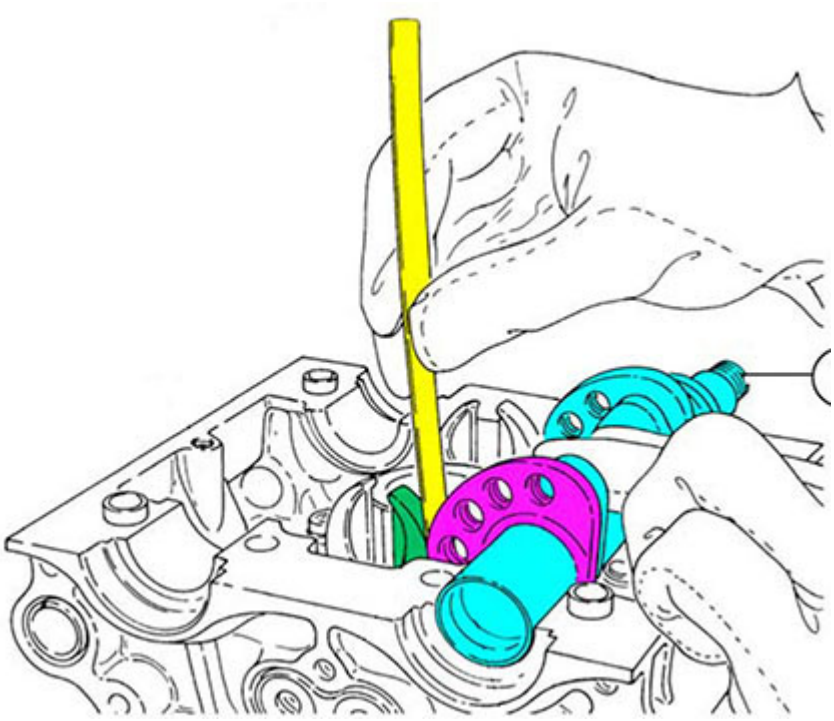

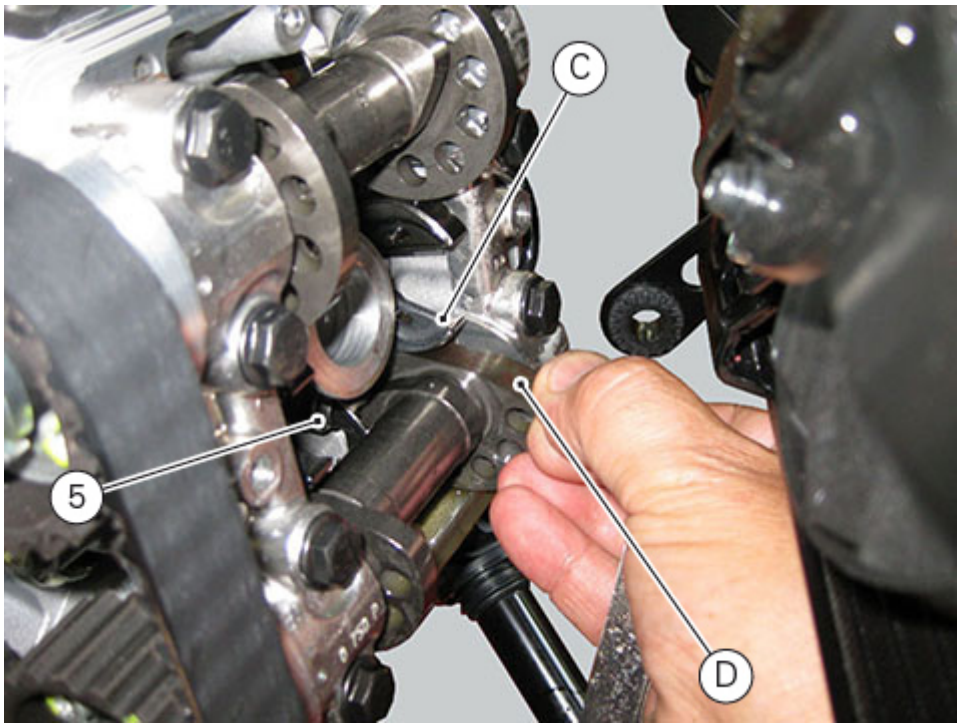
C
5
D



Restore the original conditions by refitting the previously removed components.

Remove handle from tool (E) part no. **88713.0123** working on generator cover.



Make sure that the O-ring (3) is installed on the cover (2).



Refit cover (2) and tighten the two retaining screws (1) to 10 Nm (Min. 9 Nm - Max. 11 Nm).

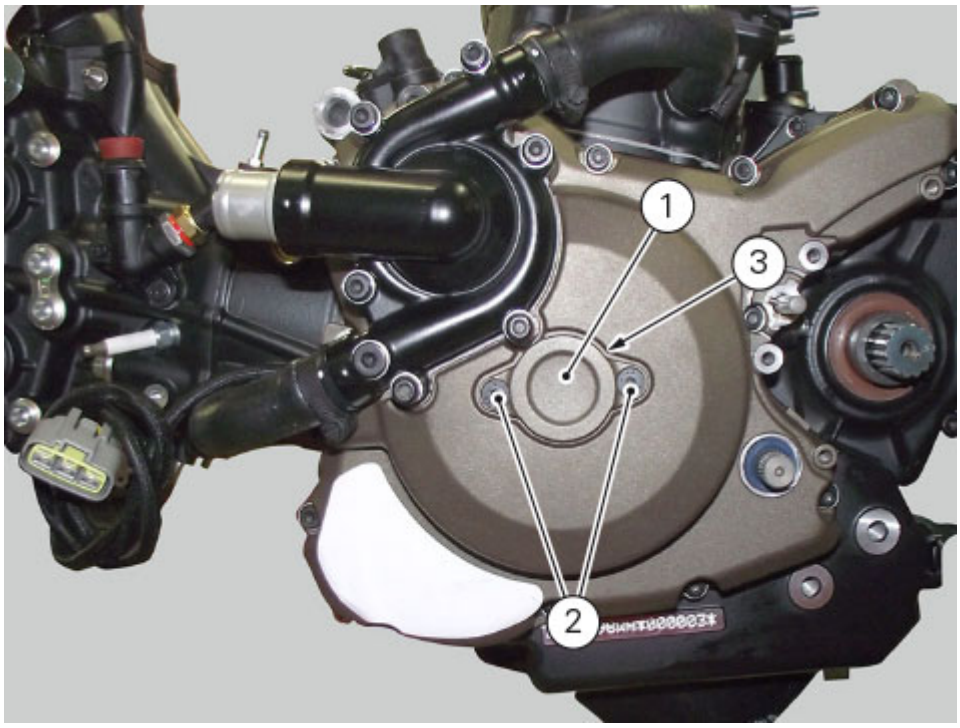

Refit the cylinder head covers (Refitting the camshafts).
Refit wiring cover and wirings on vertical head (Checking valve lift).
Refit pipes on vertical head cover (Routing of wiring on frame).
Refit the secondary air unit (Refitting the secondary air system).
Refit coils on both heads.



Correctly refit hoses (Routing wiring harnesses/hoses).
Fit water radiator and tighten fasteners (Refitting the water radiator).
Refit the timing belt covers (Refitting the timing belt external covers).
Refit the airbox (Refitting the airbox and throttle body).
Refit the fuel tank (Refitting the fuel tank).
Refit the seat (Refitting the seat).

Changing the engine oil and filter cartridge

Note
This operation has to be carried out with hot engine (but turned off) because the oil in these conditions is more fluid and comes out faster and completely.

Warning
Dispose of oil and/or filter cartridges in compliance with environmental protection regulations.

Smaltimento
Do not dispose of the waste into the environment; do not pour the product, either new or exhausted, inside drains, water courses or the soil. Collect and deliver waste to authorized collecting centres. Dispose of waste in compliance with the prevailing local and national standards. European Waste Catalogue Codes recommended for waste disposal as indicated by Decision No 2001/118/EC: CER 13 02 05* (Mineral-based non-chlorinated engine, gear and lubricating oils): CER 16 01 07* (Oil filters).

Note
It should be noted that the above-mentioned CER code is a general and non-binding provision, provided based on product original composition and intended use. The user is thus responsible for selecting the CER code most suitable to the concerned product, based on product real use and taking into account any alterations and/or contaminations of the product, as well as any amendments to the prevailing standard on waste disposal.

Position a duly-sized container under engine to collect all the exhausted oil.

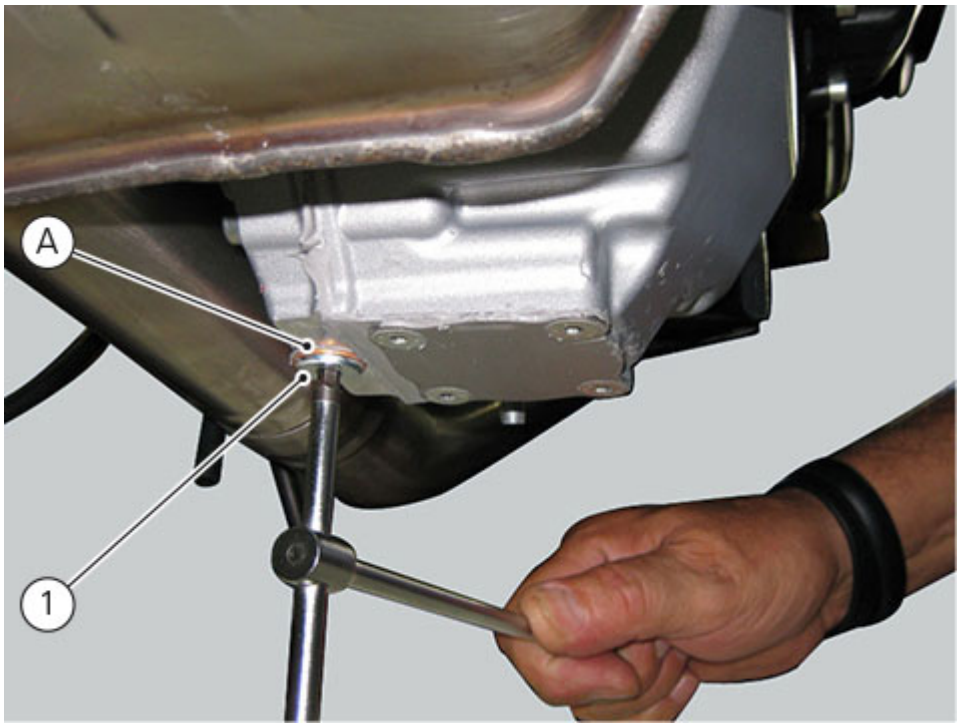

Unscrew oil drain plug (1) and wait for all the engine oil to be collected inside the special container.
Remove any metal deposits from the end of the magnetic drain plug (1). Clean the thread of the drain plug, apply the indicated product and refit the drain plug complete with gasket (A) to the sump.

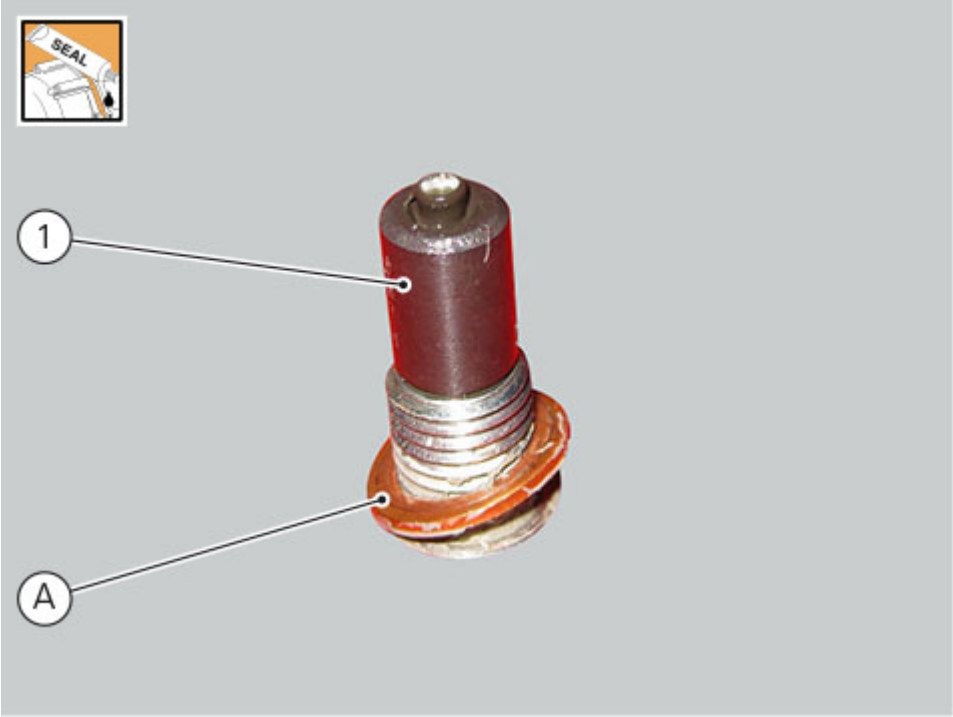

Tighten the drain plug (1) to a torque of 20 Nm (Min. 18 Nm - Max. 22 Nm).
Remove the oil sump filter cartridge (2) using service tool part no. **88713.2906**, and wait for engine oil to be further drained inside the special container.

Important
Dispose of the used filter, do not re-use it.

Fit a new cartridge (2), using tool part no. **88713.2906**, taking care to lubricate seal with engine oil.

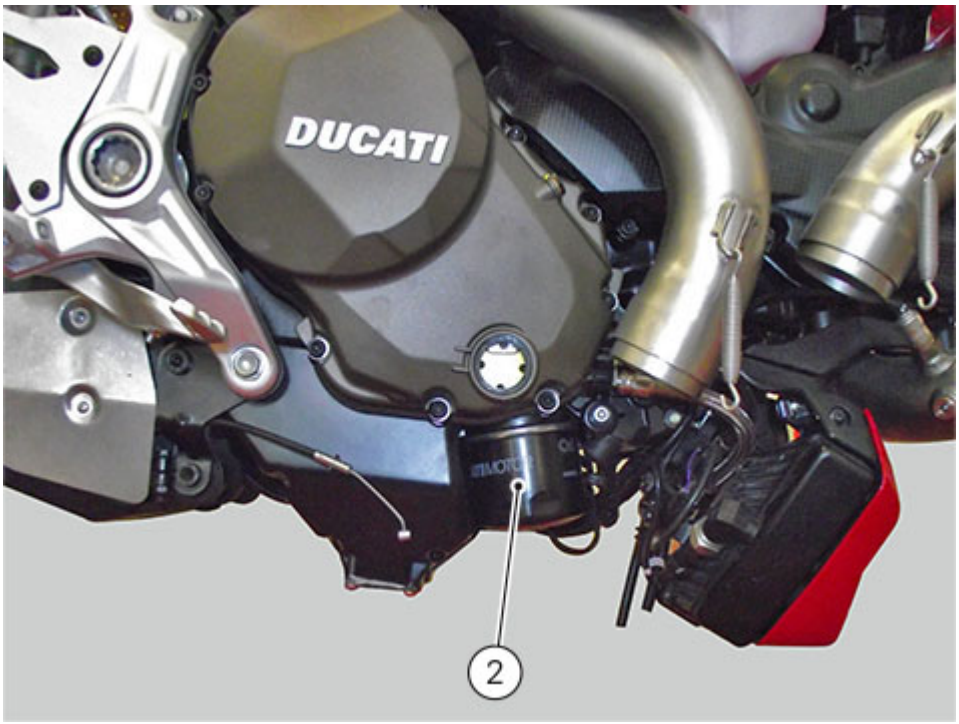

Note
As an alternative, it is advisable to refill the filter cartridge with engine oil before fitting it: this enables the recommended oil level to be maintained without topping up.



Screw it into seat and tighten it to 11 Nm (Min. 10 Nm - Max. 12 Nm).
Every two oil changes, clean the oil intake mesh filter.
Loosen the four screws (3) of the external cover (4) and remove it.

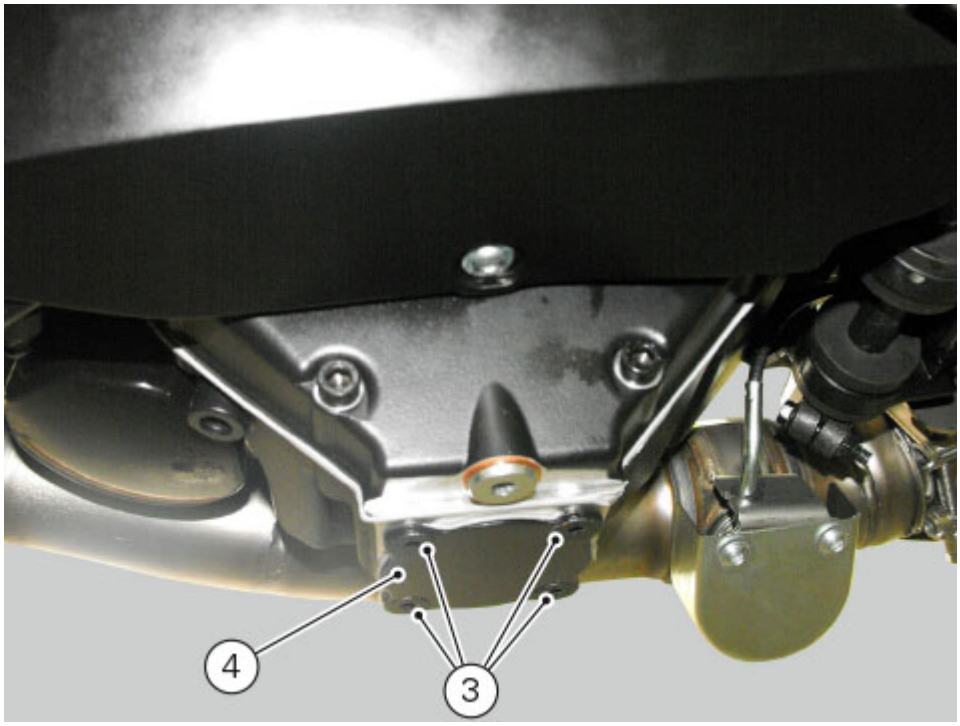

Remove the filtering element (5) and check the O-rings (6) and (7), and replace them if necessary.
While waiting for the last and further exhausted oil drainage inside the special container, clean filter with compressed air and fuel, taking care not to damage the mesh.

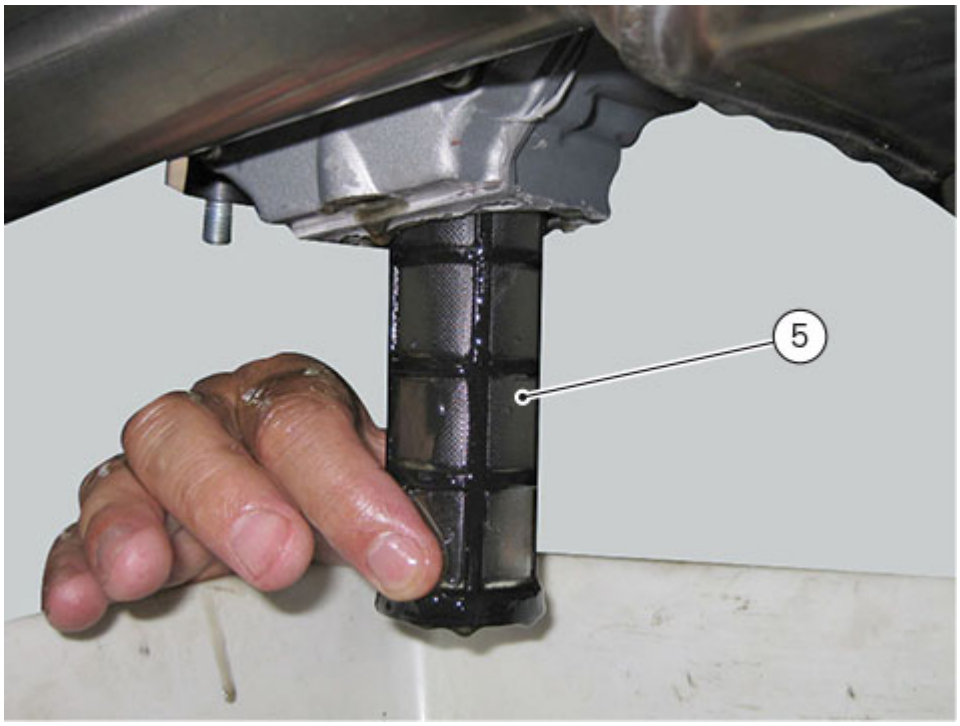
5

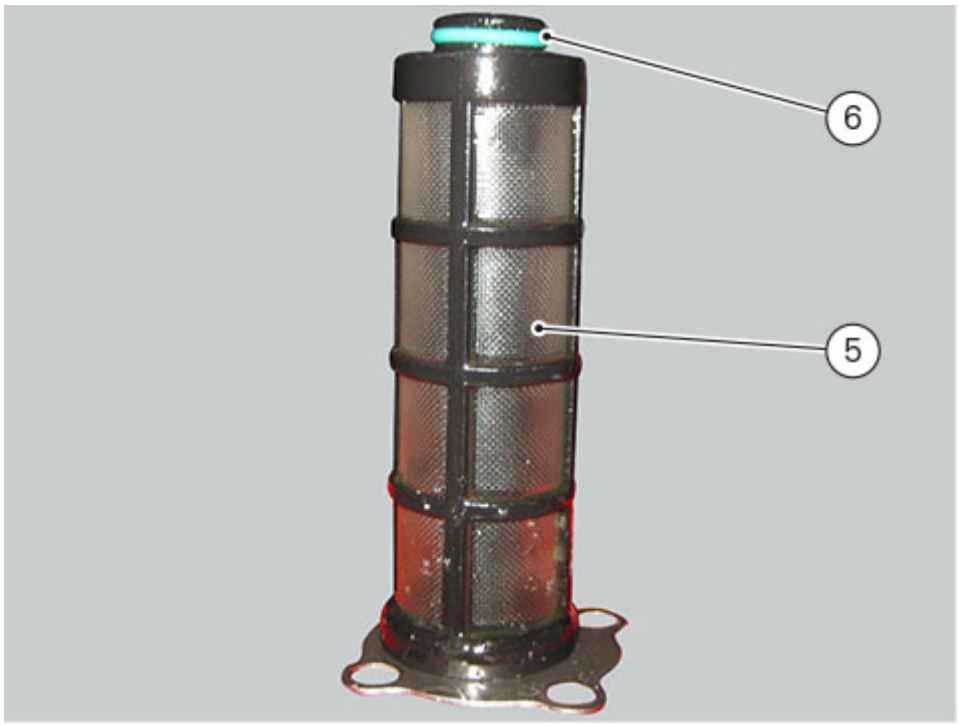
6
5

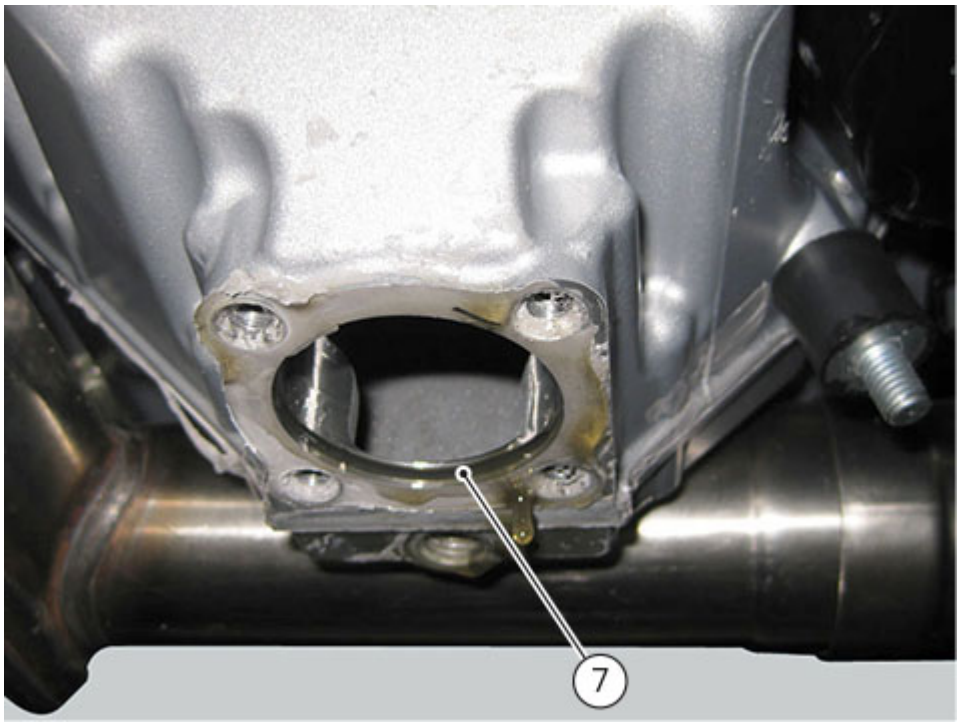

Position O-ring (7) on the crankcase and O-ring (6) on the mesh filter (5).

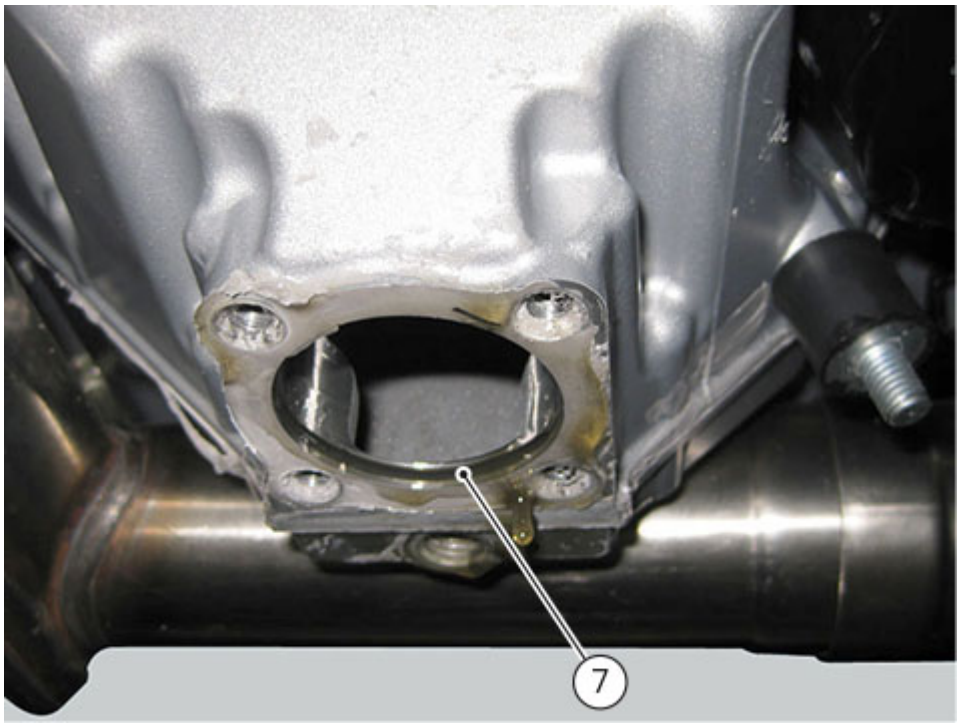

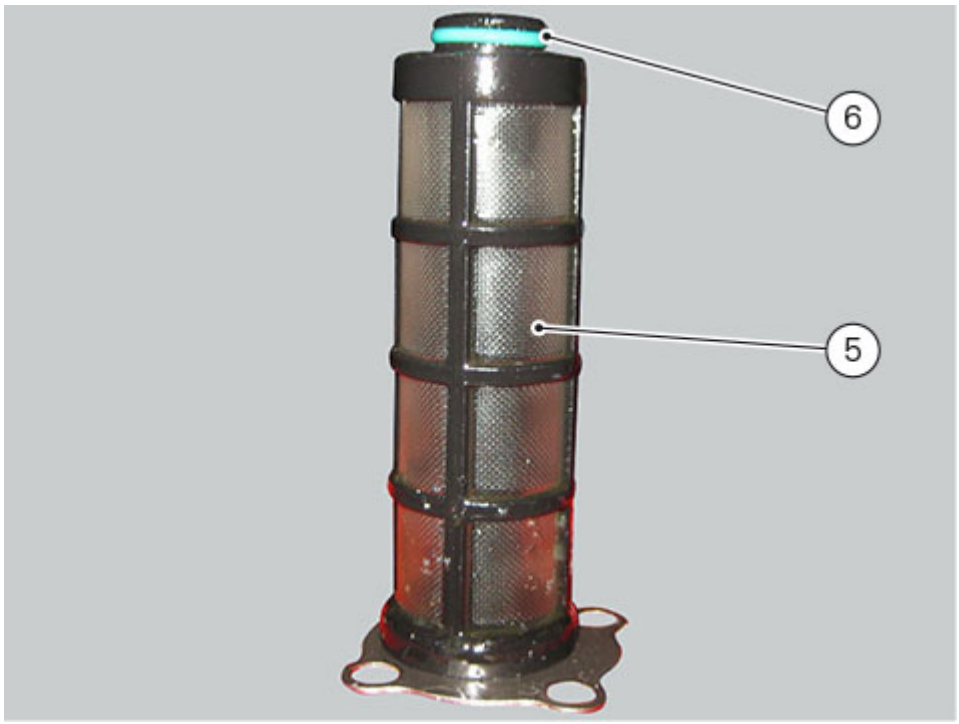

Refit the mesh filter (5).

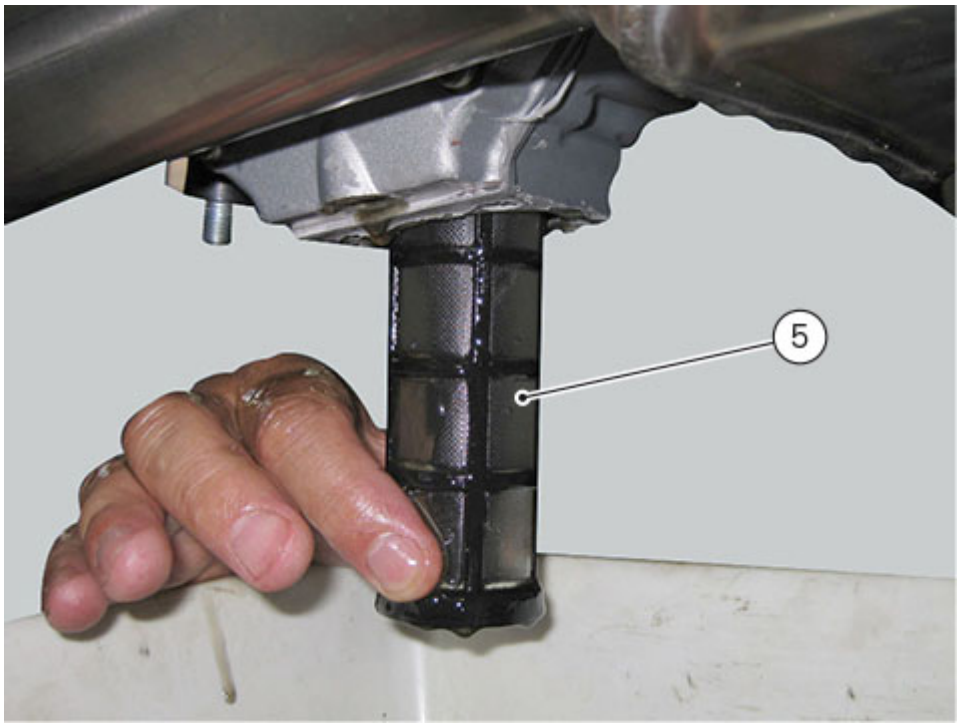

Apply a bead of sealing compound to cover (7) as shown in the figure.

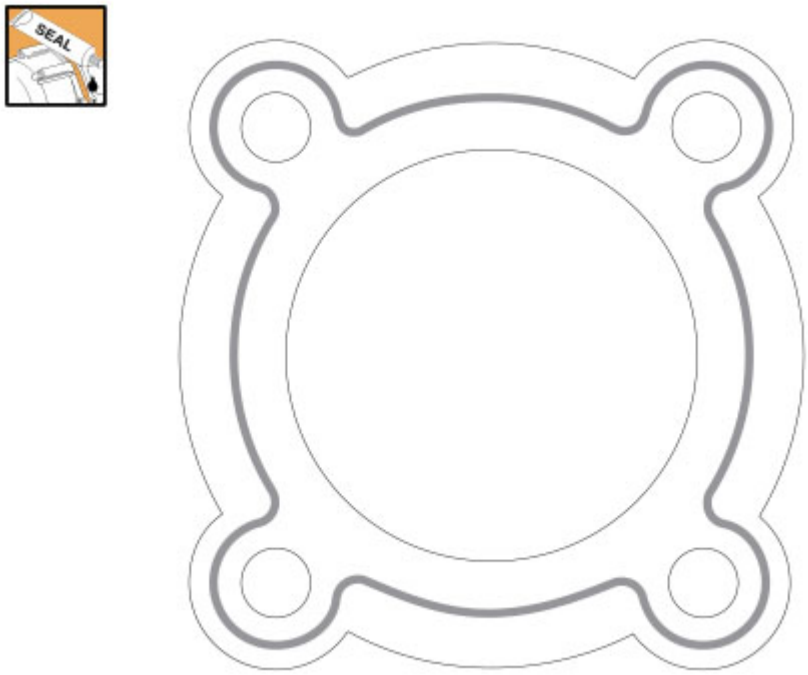

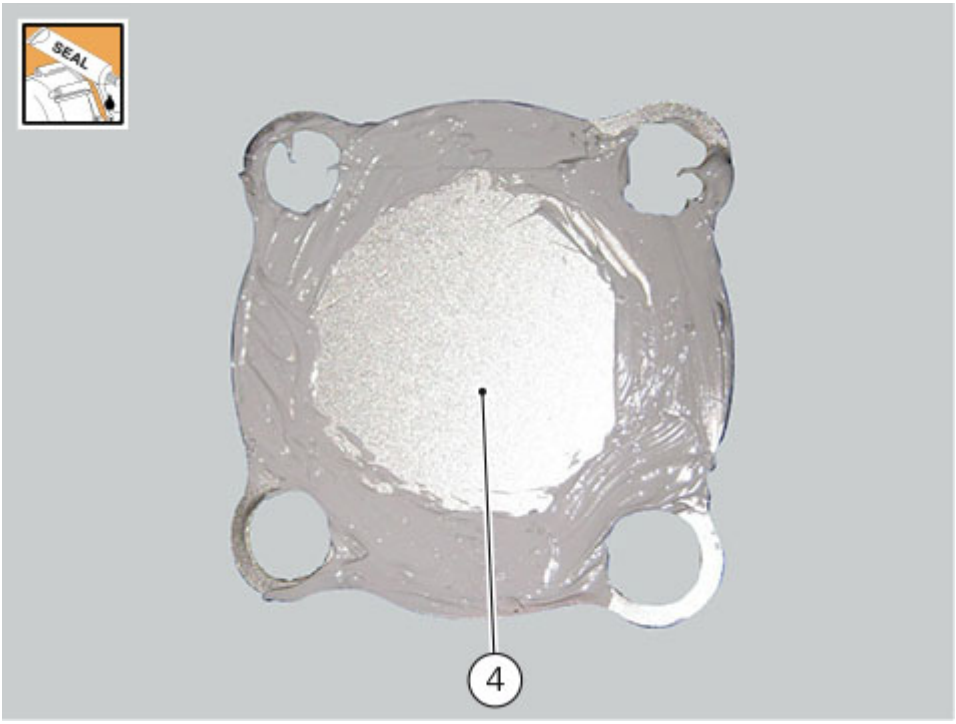

Remove the filler plug (8) and carry out refilling with the specified oil type up to reaching the notch that identifies the MAX level in the sight glass (9).
Ducati recommends you use Shell Advance 4T Ultra 15W-50 oil. As an alternative it is possible to use a motorcycle engine oil having the same degree SAE 15W-50 and meeting the following specifications JASO: MA2 and API: SM.
Refit the filler plug (8). Run the engine at idle speed for a few minutes.

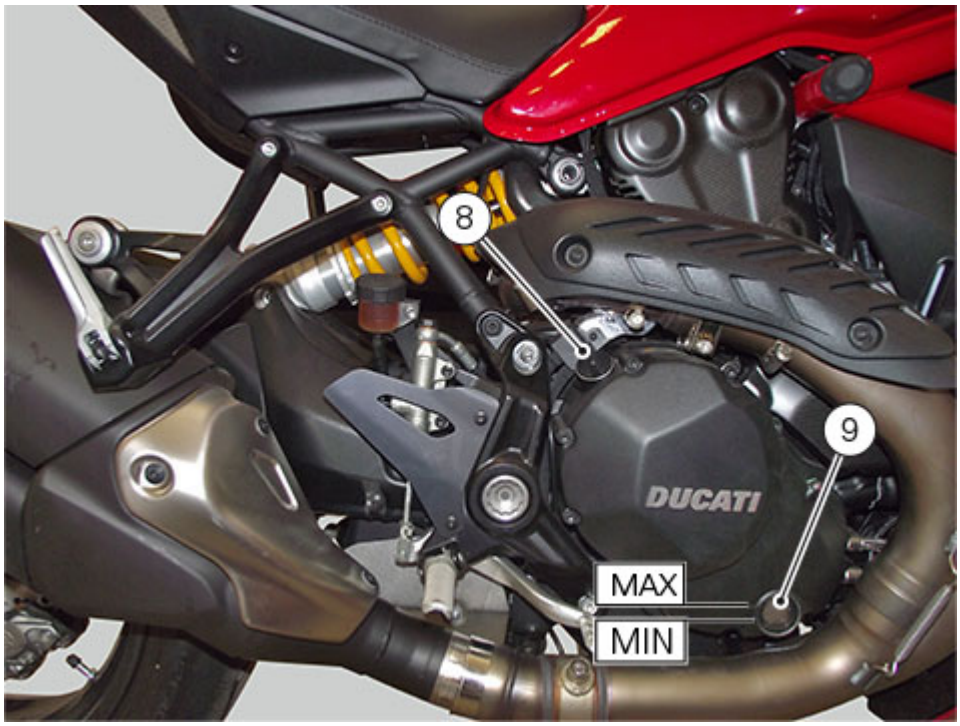

Check that there are no oil leaks and that the engine oil pressure warning light on the instrument panel switches off a few seconds after starting up the engine. If not, stop the engine and trace the fault.
After a few minutes, check that the oil level is the specified one; if necessary, restore the "MAX" level.
Tighten screws (3) retaining external cover (4) to a torque of 10Nm (Min. 9Nm - Max. 11Nm) after having applied the specified threadlocker.

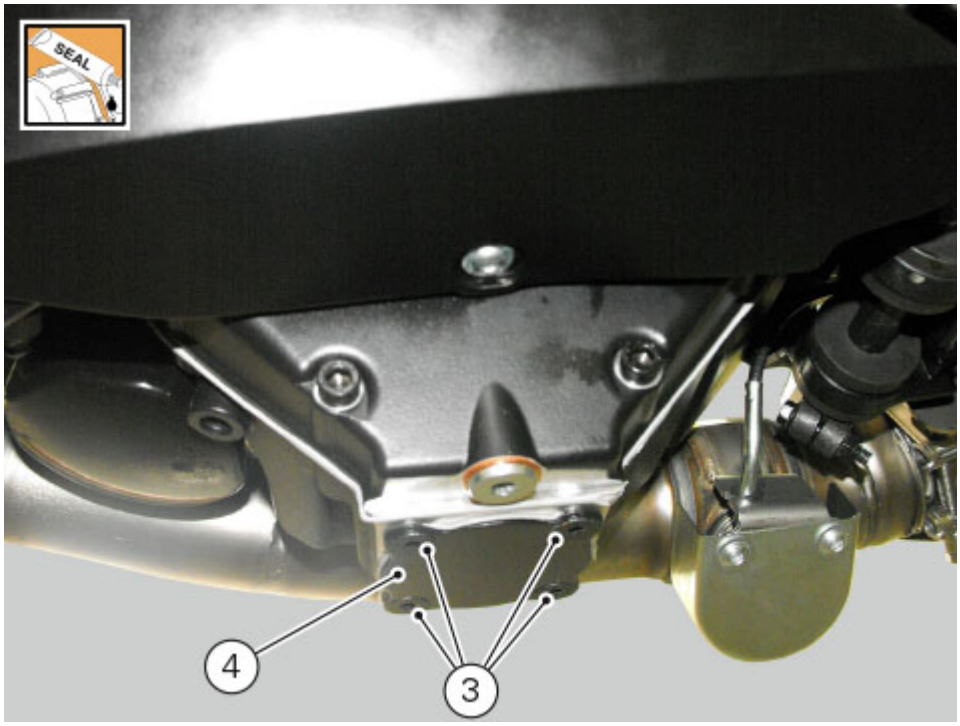

Check engine oil level

Check the engine oil level through the sight glass (1) on the right-hand side of the oil sump.
Stop the engine and allow a few minutes for the oil to settle to a steady level.
Oil level must be checked with the vehicle perfectly upright and the engine hot (but off).
Level must be between the "MIN" and "MAX" marks; top up if level is low.
Remove the filler plug (2) and top up with the recommended oil.
Ducati recommends you use Shell Advance 4T Ultra 15W-50 oil. As an alternative it is possible to use a motorcycle engine oil having the same degree SAE 15W-50 and meeting the following specifications JASO: MA2 and API: SM.
Refit the filler plug (2).

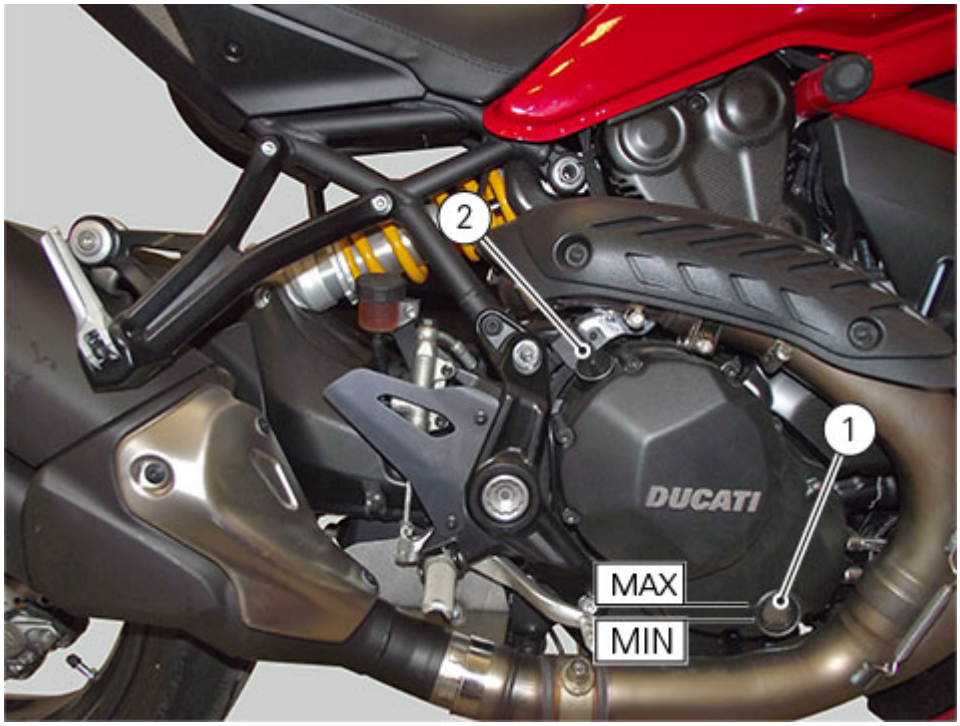

Refitting the rear-view mirrors

Position the RH rear-view mirror (2) and after fitting the washer on screw (1) tighten the screw to a torque of 25Nm ± 10%.

Warning

The screw features a left-hand thread: tighten it counter clockwise.

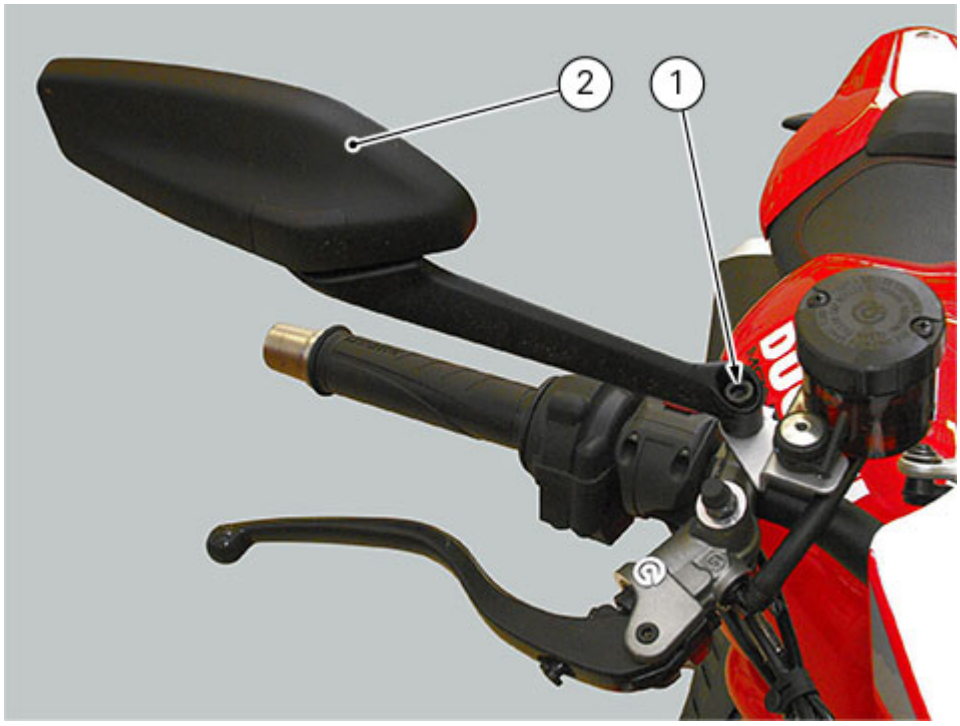

Follow the same procedure on the LH rear-view mirror (4) and tighten screw (3) to a torque of 25Nm ± 10%.

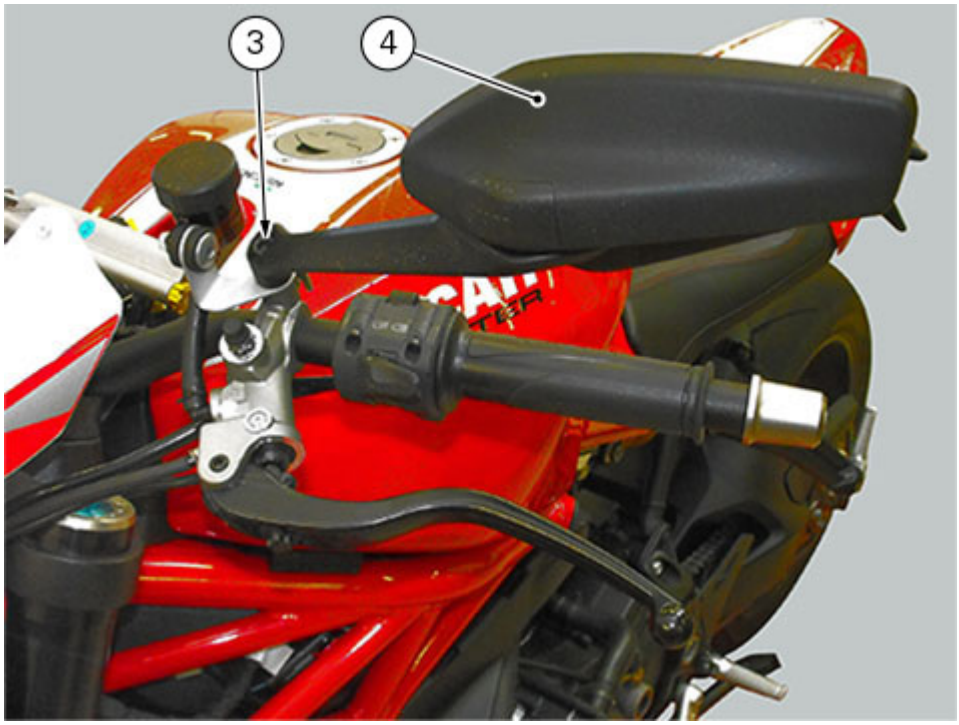

Removing the rear-view mirrors

Loosen the screw (1) and remove it collecting the lower washer.
Remove the RH rear-view mirror (2).

Warning

The screw features a left-hand thread: loosen it clockwise.

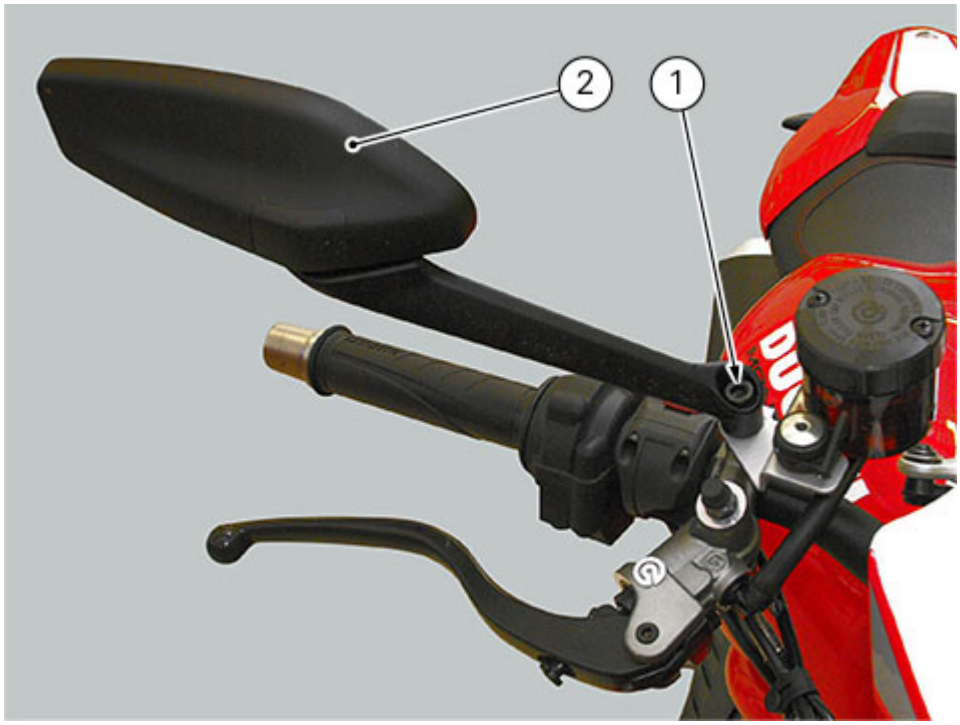

Loosen the screw (3) and remove it collecting the lower washer.
Remove the LH rear-view mirror (4).

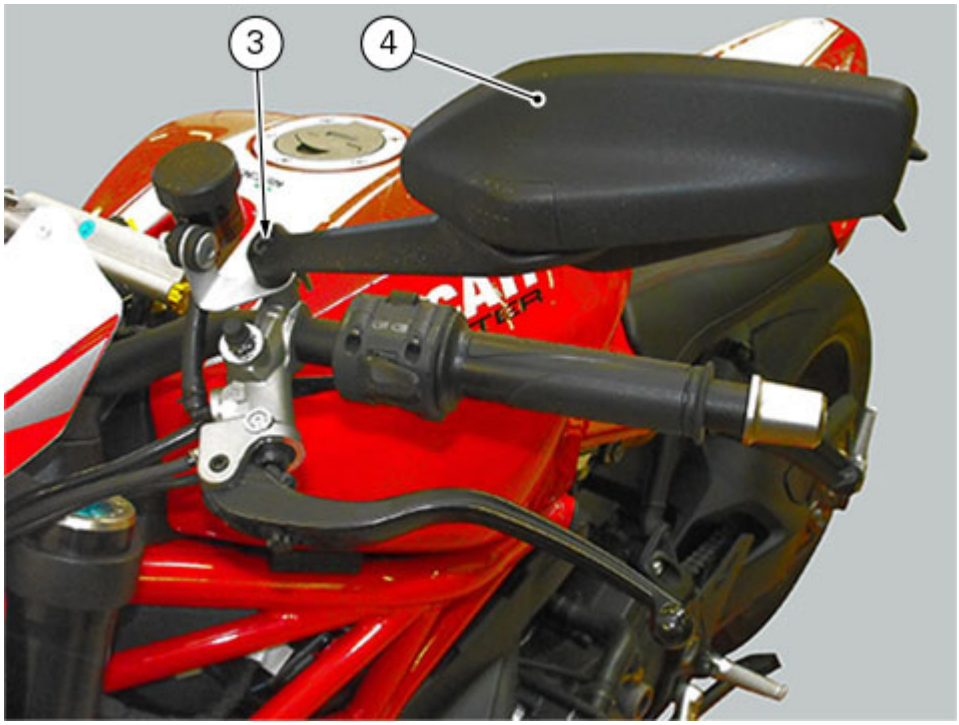

Refitting the headlight fairing

Position headlight fairing (2) under brackets (3) and tighten the four screws (1) to a torque of 2.5Nm.



Removing the headlight fairing

Undo the four retaining screws (1) and slide headlight fairing (2) out of brackets (3).



Refitting the instrument panel assembly

After having applied the specified product on vibration damper (6), position instrument panel (5) on support (7).

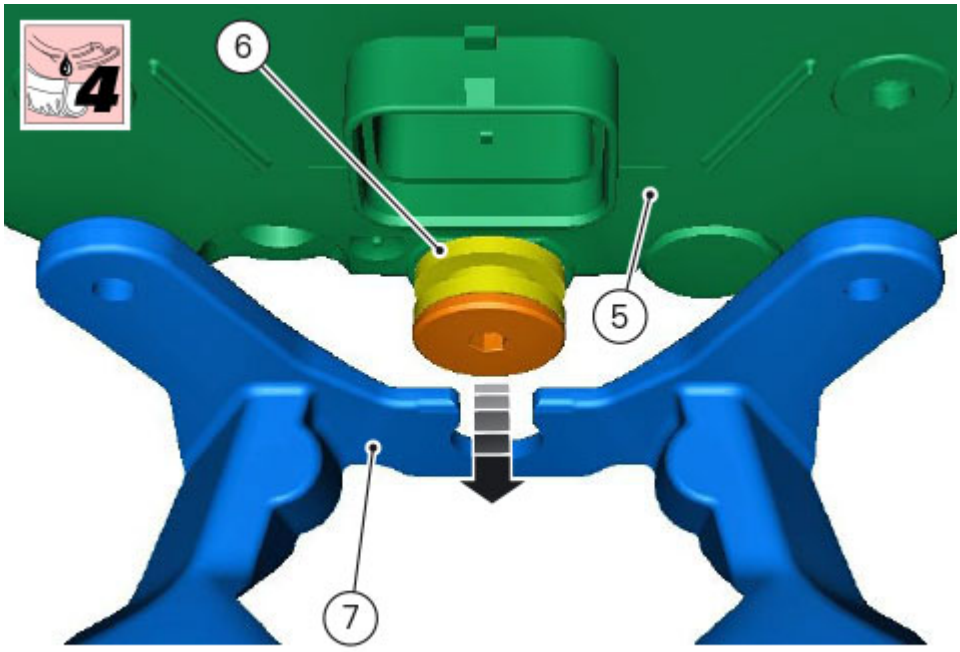

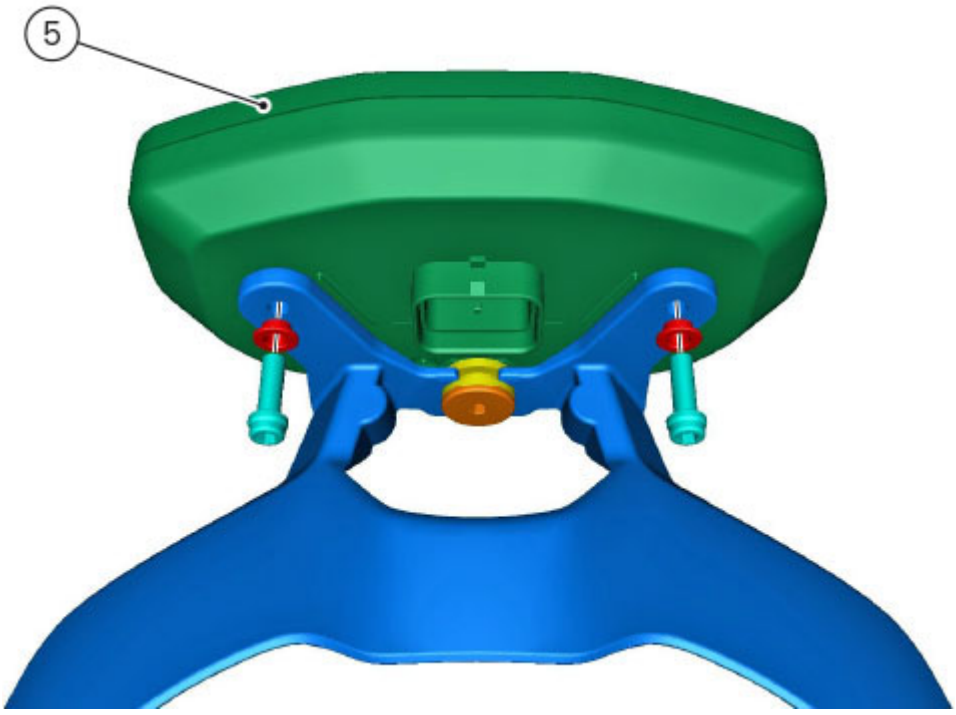

Connect the instrument panel connector (1).
Tighten the two screws (2) with spacers (3) to a torque of 2Nm±10%.

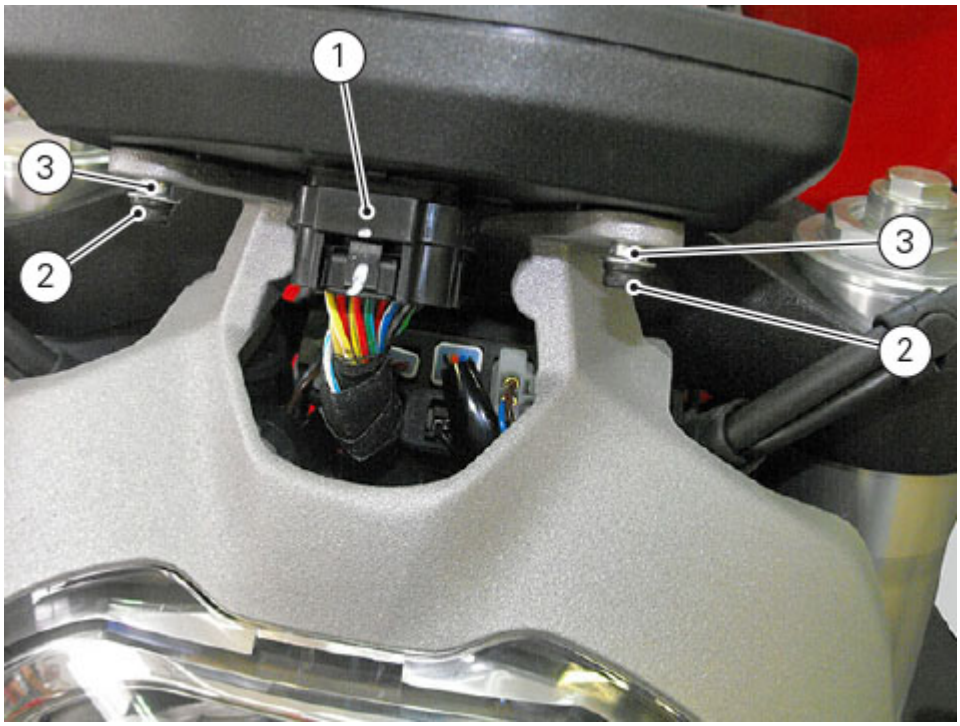

Refit the headlight fairing (Refitting the headlight fairing).

Removing the instrument panel assembly

Remove the headlight fairing (Removing the headlight fairing).
Disconnect the connector (1).
Loosen the two screws (2) and collect the two spacers (3).

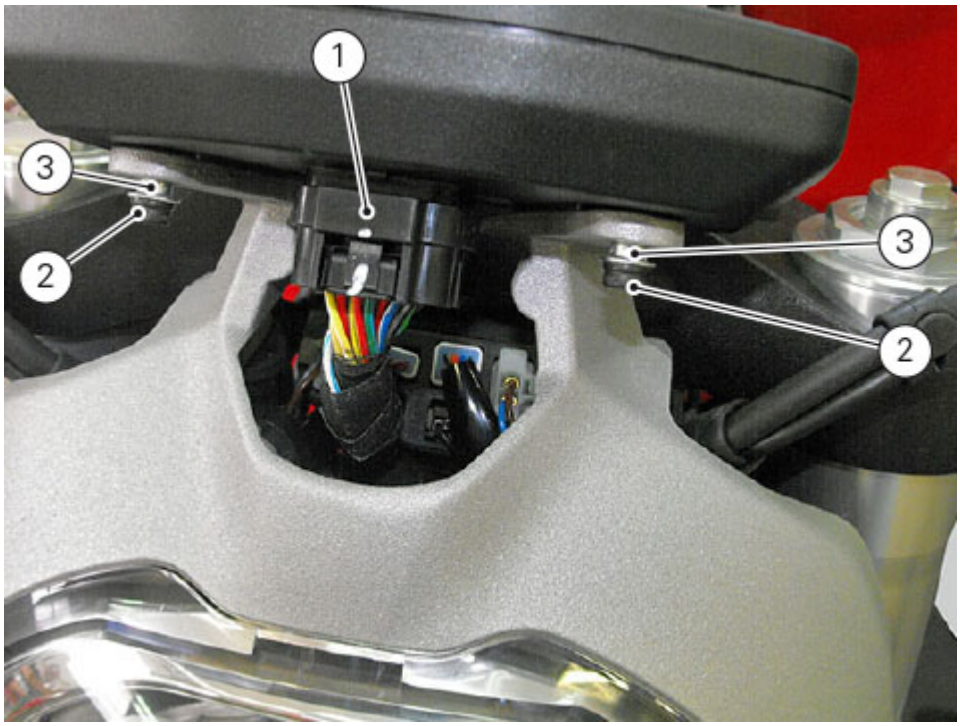

Slide instrument panel (5) out pulling it up.

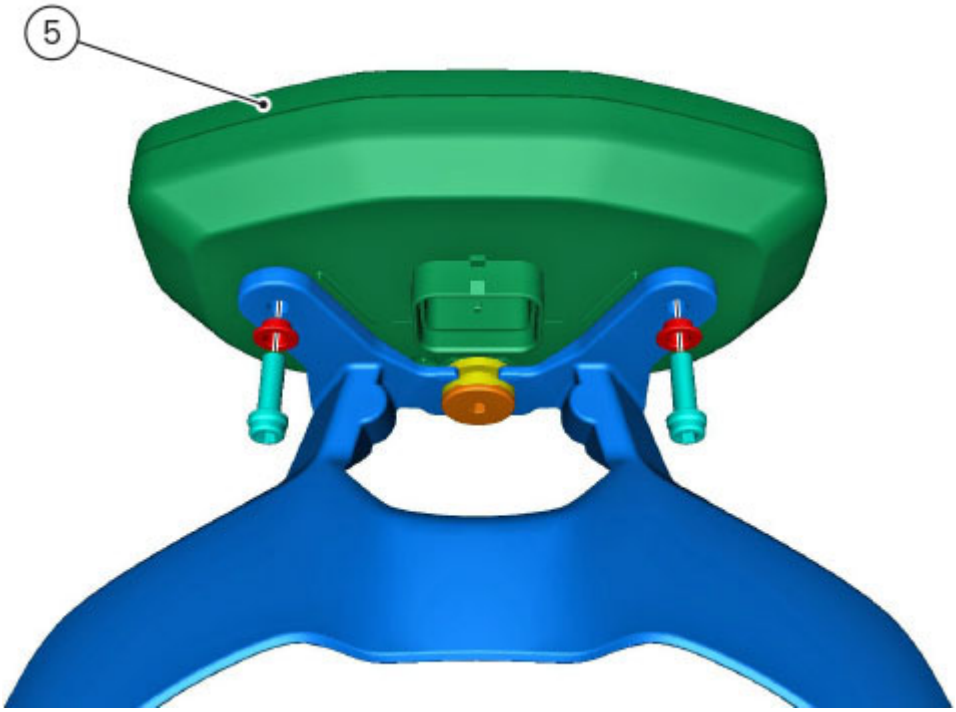

Refitting the seat bottom cover

Insert lock (12) and start ring nut (10), then tighten it to a torque of 4Nm±10%.

Warning

Move the ring nut until the collar is facing downwards.

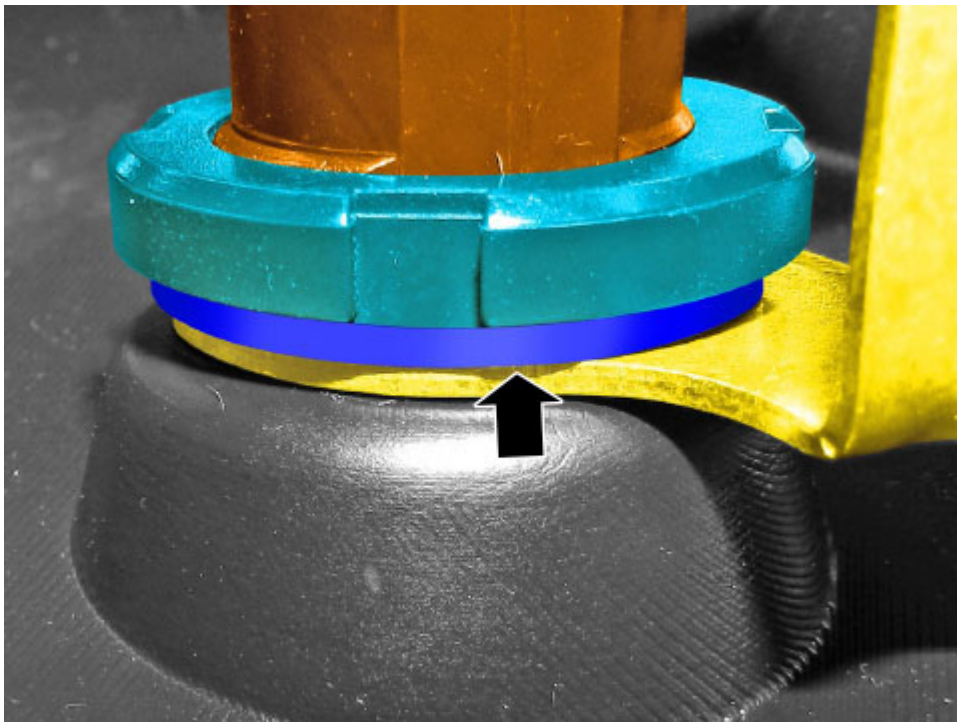

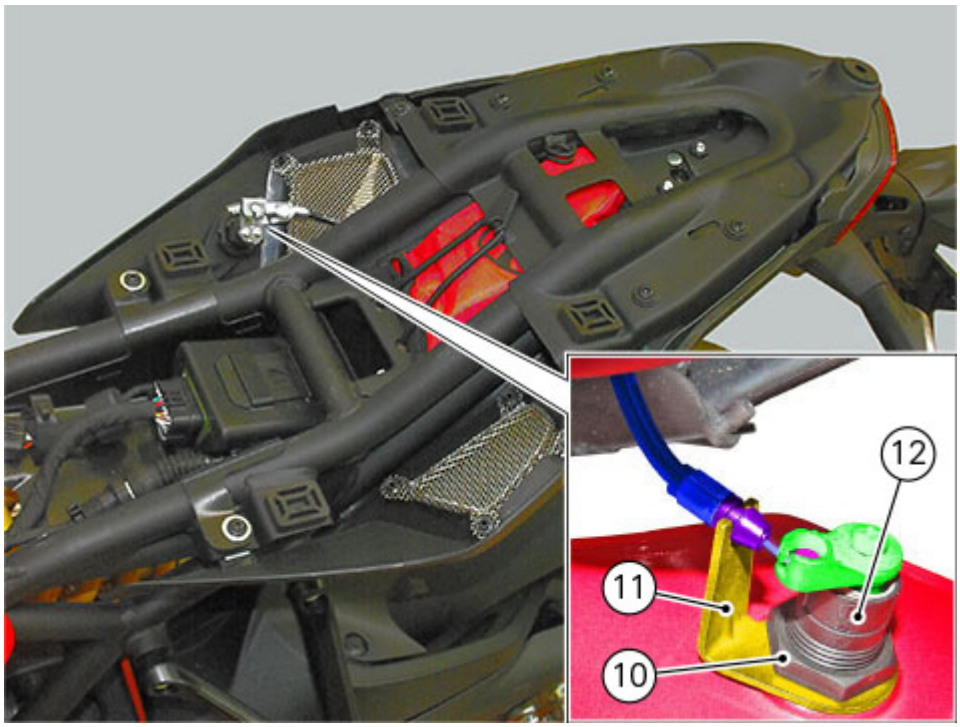

Position seat bottom cover (4) and tighten the two lower screws (3) to a torque of 3Nm±10%.

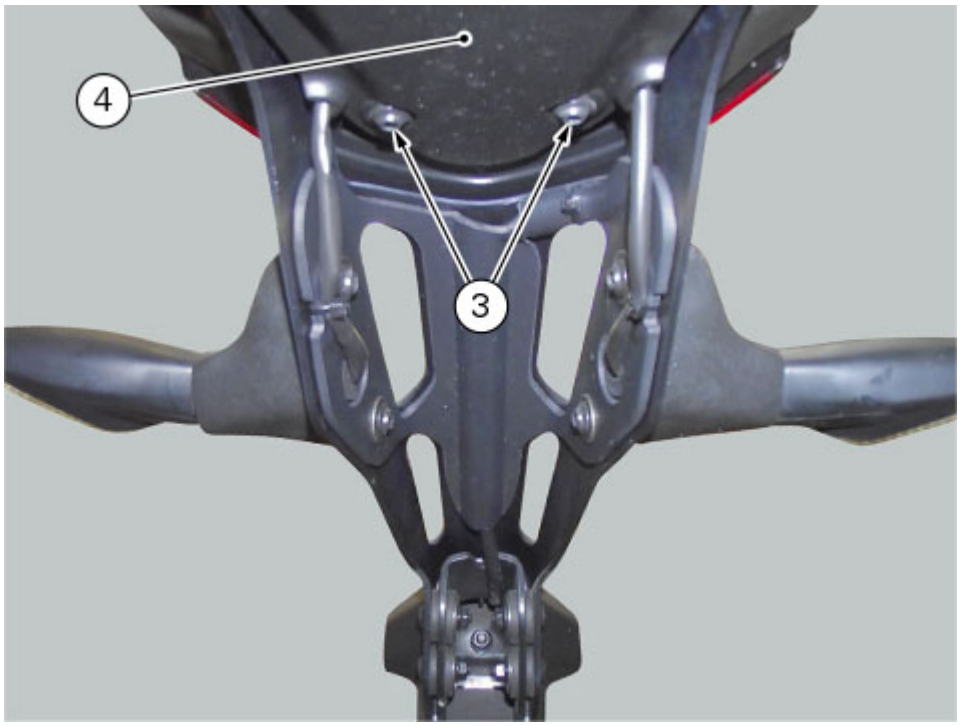

Place the two lower washers and tighten screws (2) to a torque of 3Nm±10%.
Position and tighten the two screws (1) to a torque of 3Nm±10%.

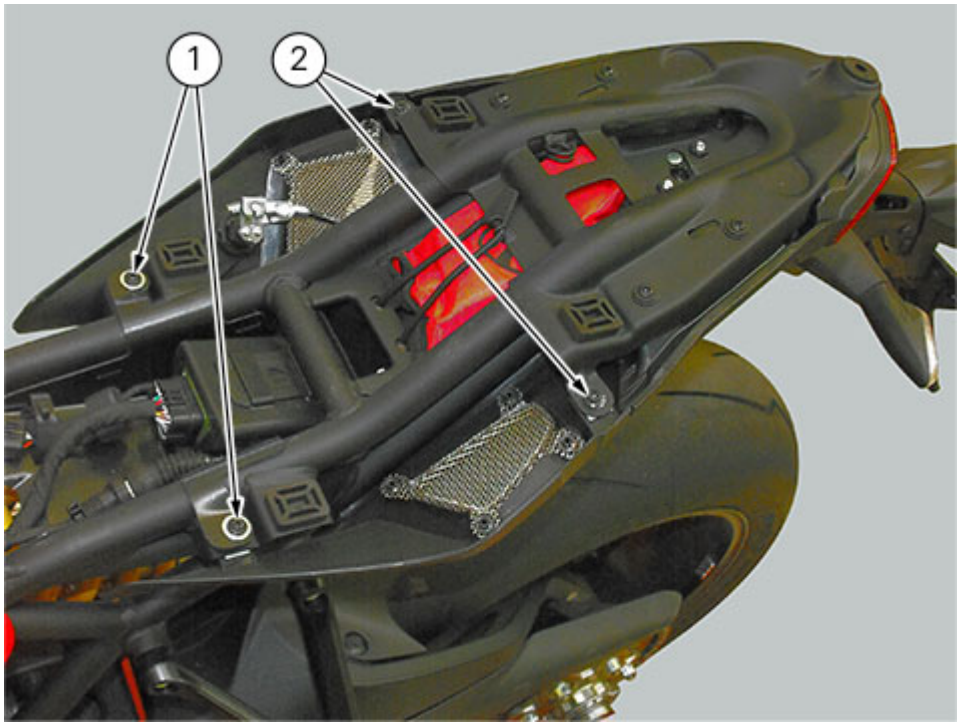

Position seat lock cable (7) on vehicle, locking nipple (5) on plate and securing cable on seat (A).

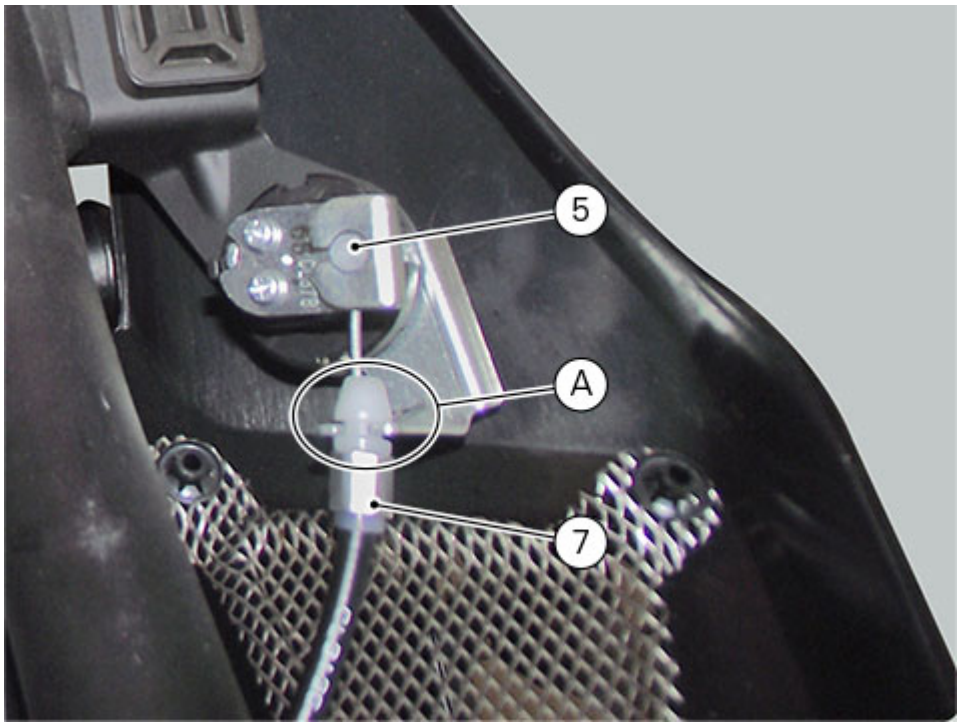

Refit the seat (Refitting the seat).

Removing the seat bottom cover

Remove the seat (Removing the seat)

Loosen the two screws (1).
Loosen the screws (2) and collect the lower washers.

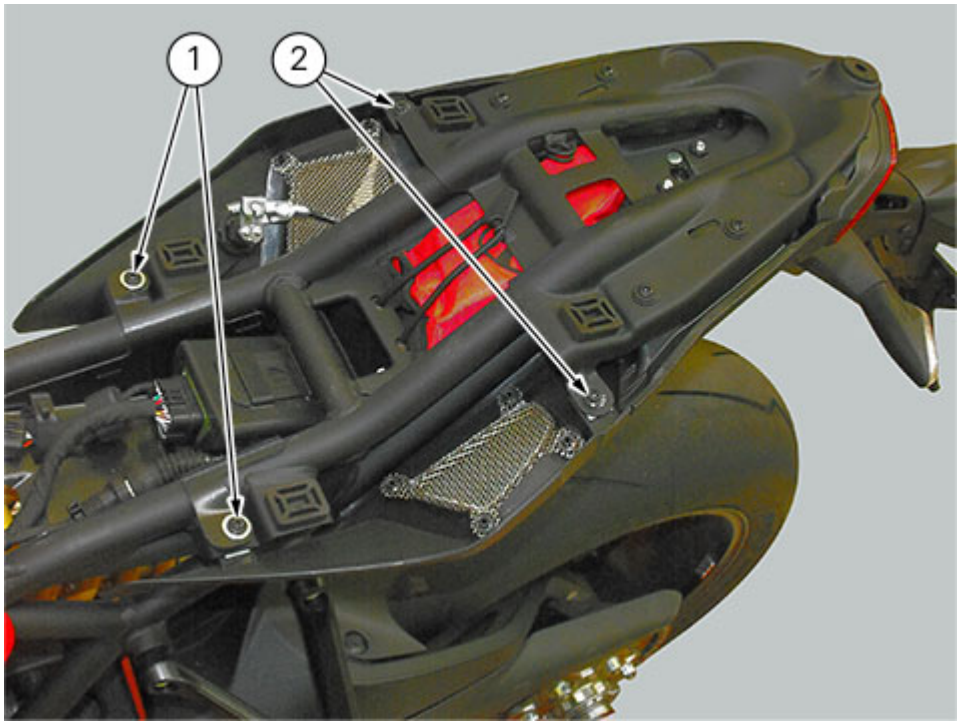

Release seat lock cable (7) nipple (5) from its housing (A).

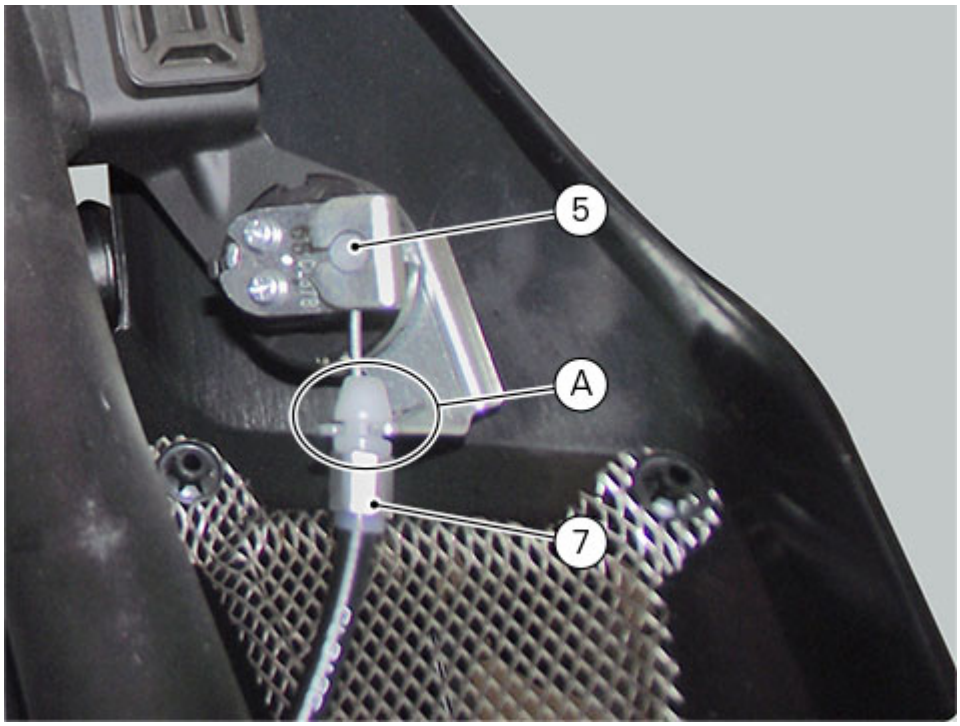

Loosen the two lower retaining screws (3) on seat bottom cover (4), having care not to damage upper inserts, then slide cover (4) out from below.

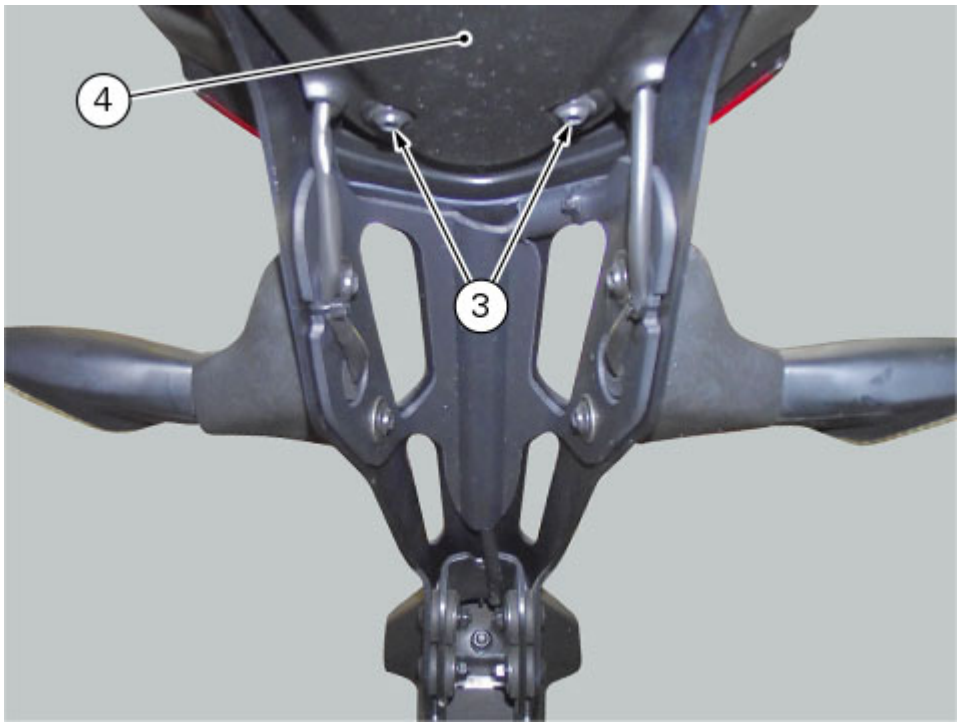

Loosen the ring nut (10) and remove plate (11).
Then remove lock (12).

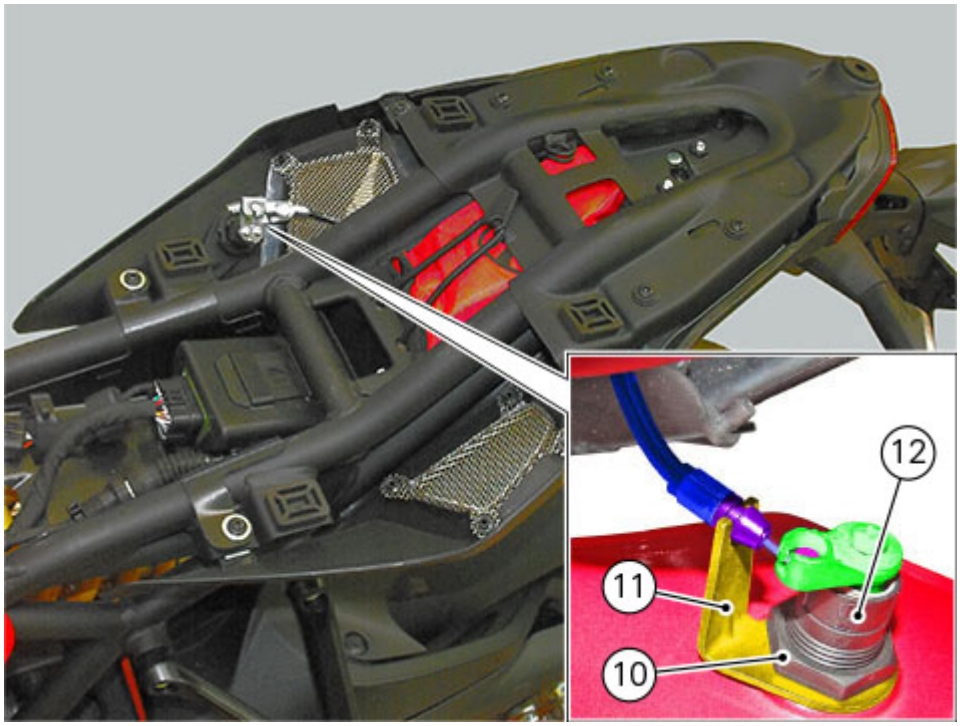

Refitting the seat release mechanism

Working on RH rear side body panel, insert plate (11), lock (12) and start ring nut (10), then tighten it to a torque of 4Nm±10%.

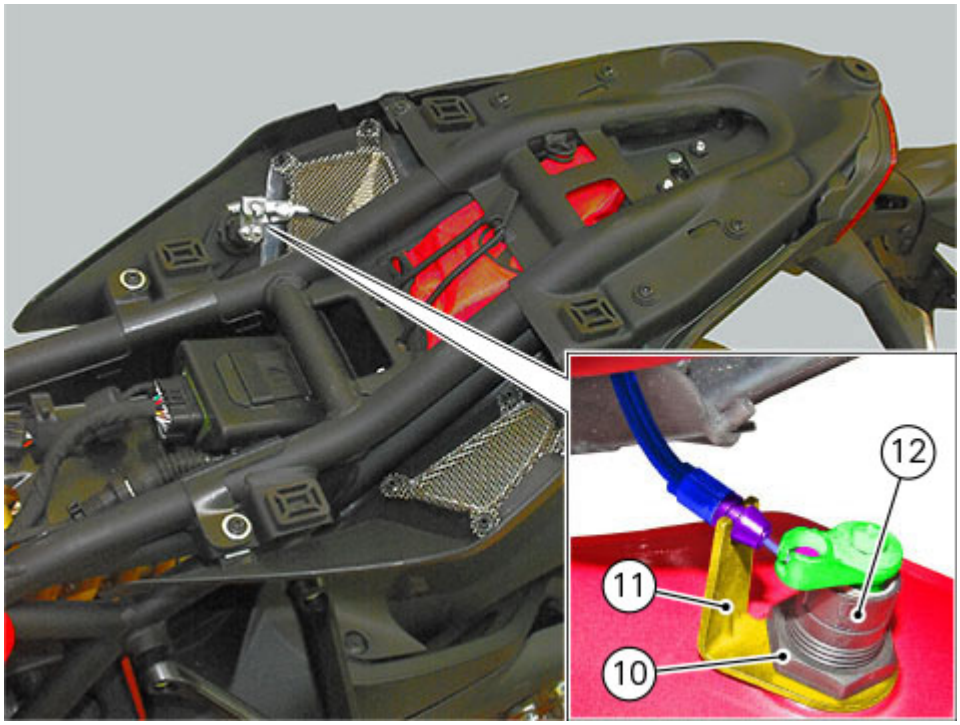

Warning

Move the ring nut until the collar is facing downwards.

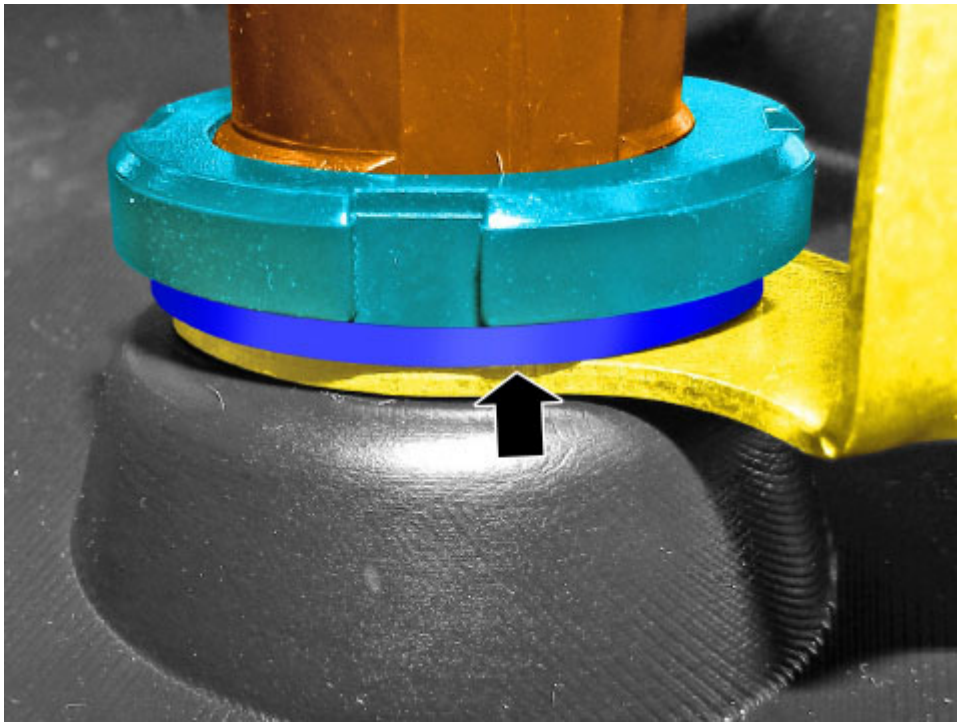

Position latch (9) and fix it by starting the two screws (8).
Tighten the two screws (8) to a torque of 5Nm±10%.
Position lock cable (7), locking nipple (6) inside the special seat and securing cable (7) on seat (B).

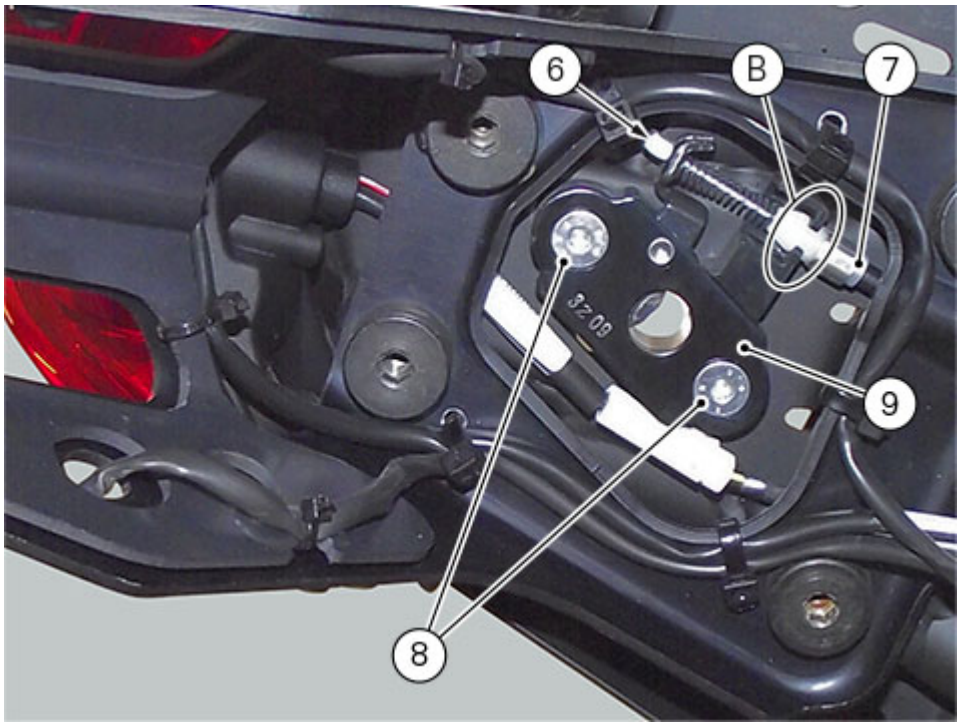

Refit the seat bottom cover (Refitting the seat bottom cover).
Position seat lock cable (7) on vehicle, locking nipple (5) on plate and securing cable on seat (A).

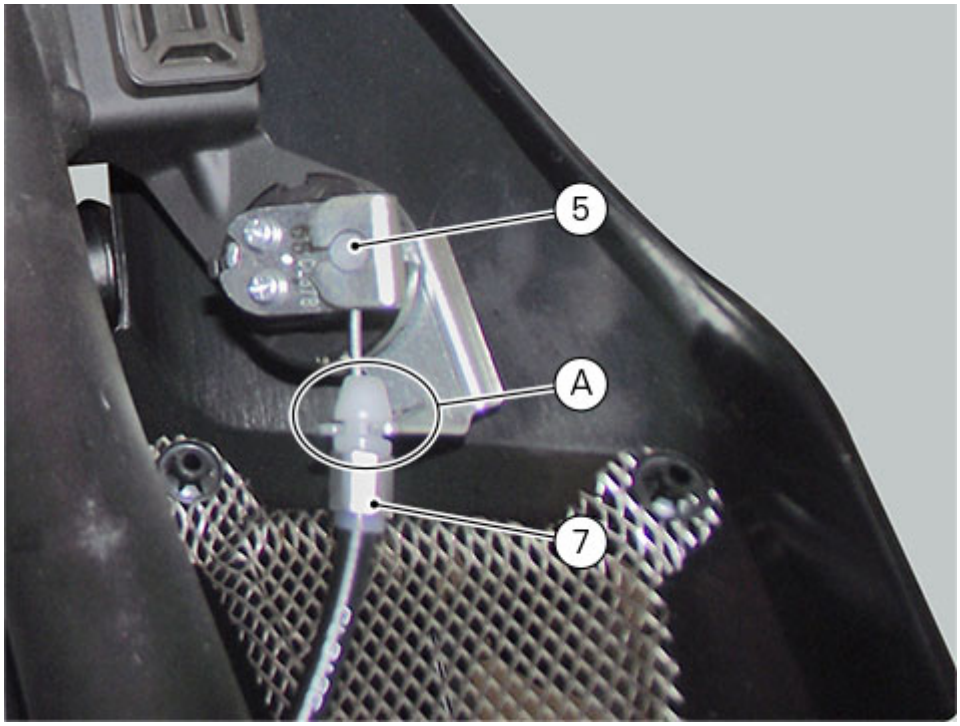

Refit the seat (Refitting the seat).

Removing the seat release mechanism

Remove the seat (Removing the seat).
Remove the seat bottom cover (Removing the seat bottom cover).

Release nipple (6) and seat lock cable (7) from seat (B).
Loosen the two screws (8) and remove the latch (9).

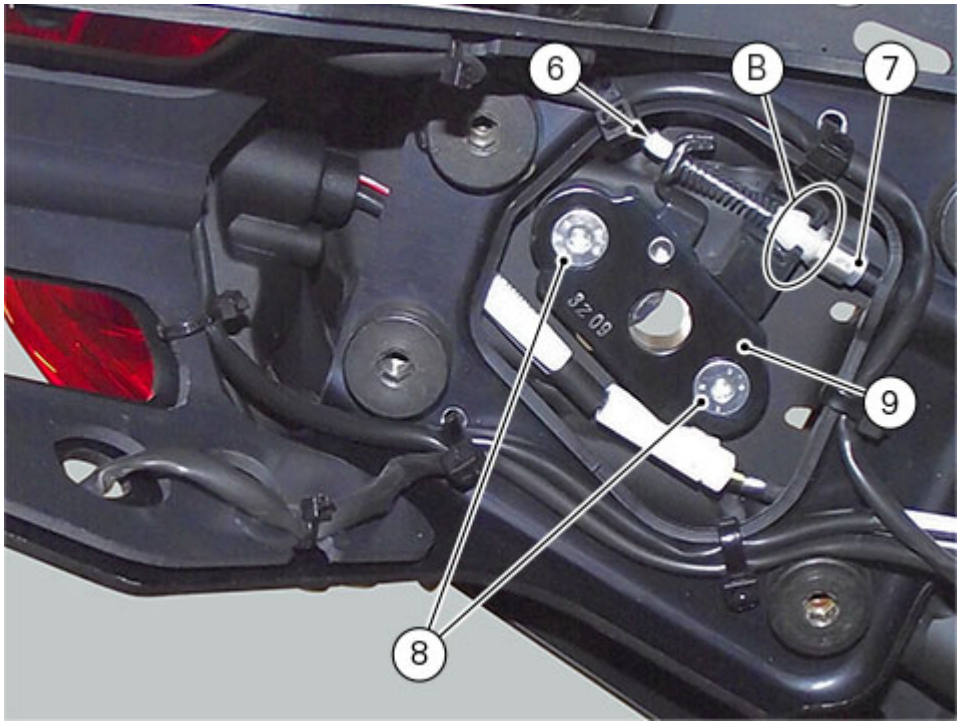

Collect seat lock cable (7).

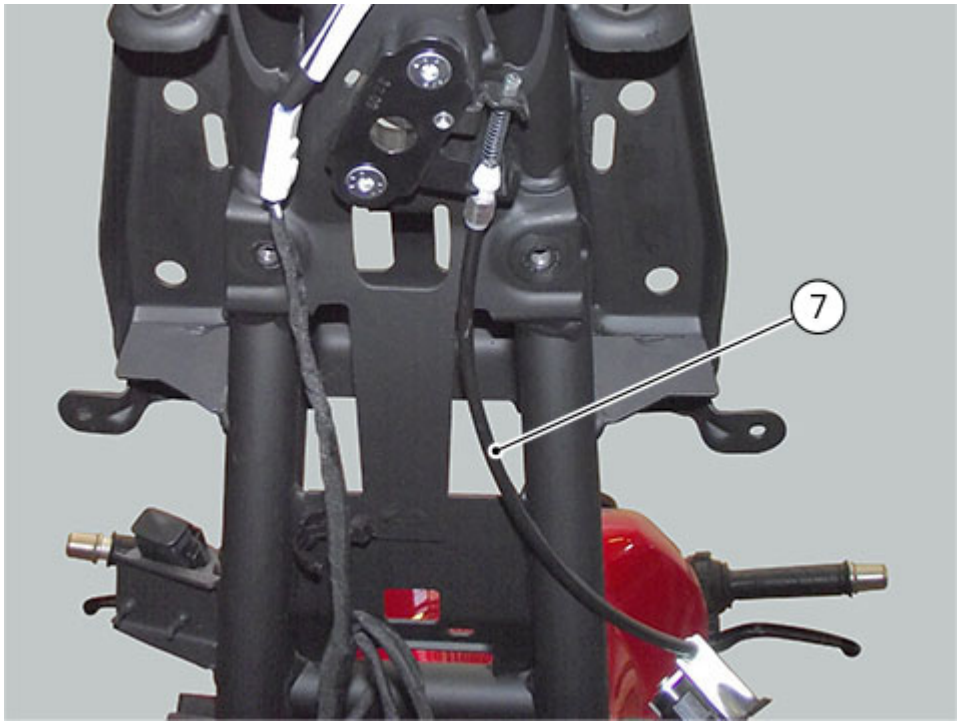

Refitting the seat

REFITTING THE SEAT COVER

If previously removed, refit seat cover (2) and fix it by engaging the lower tabs (A).

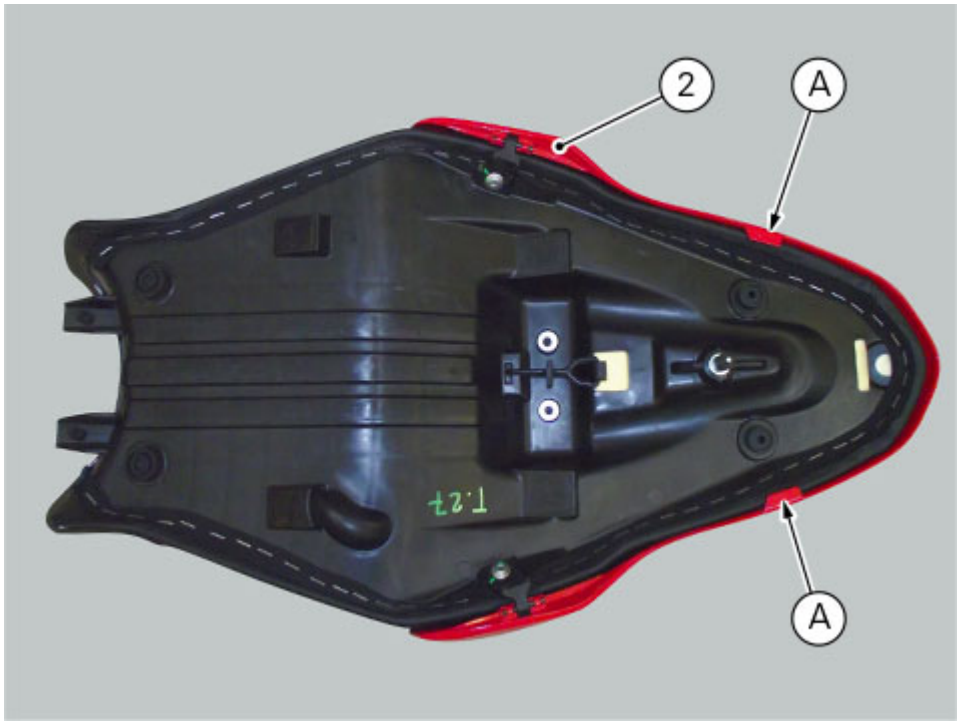

Tighten the two lower screws (3) to a torque of 4Nm±10%.

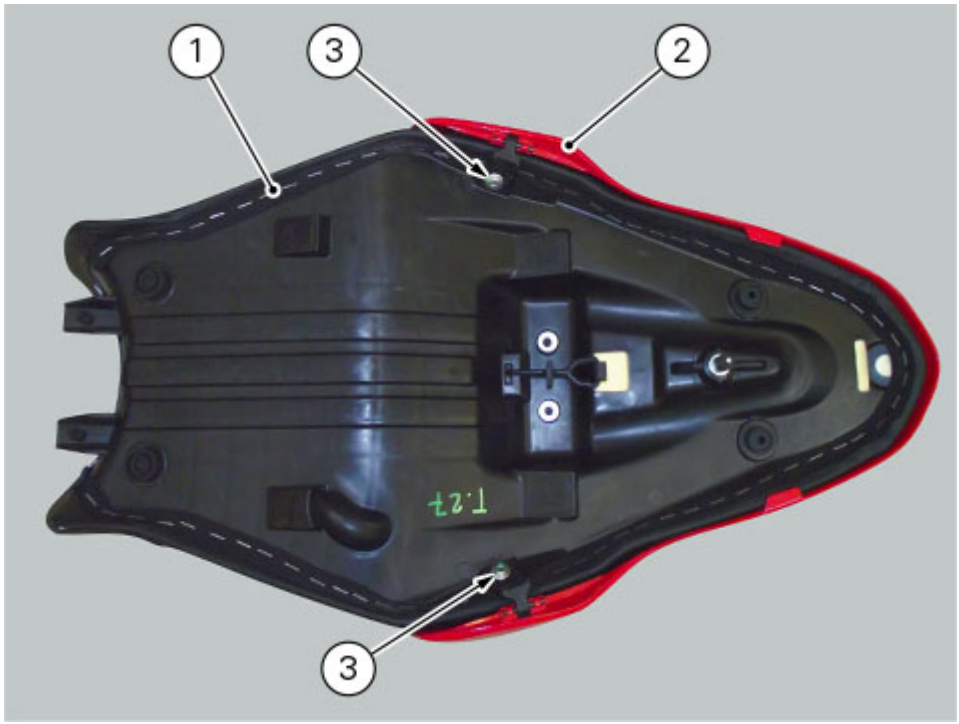

Pin (4) in the rear part of seat (1) must be positioned so as to be aligned with seat (B) on the rear subframe, while tabs (6) must engage inside seats (C).
Lower the seat (1) and press on the seat rear side to properly engage it.

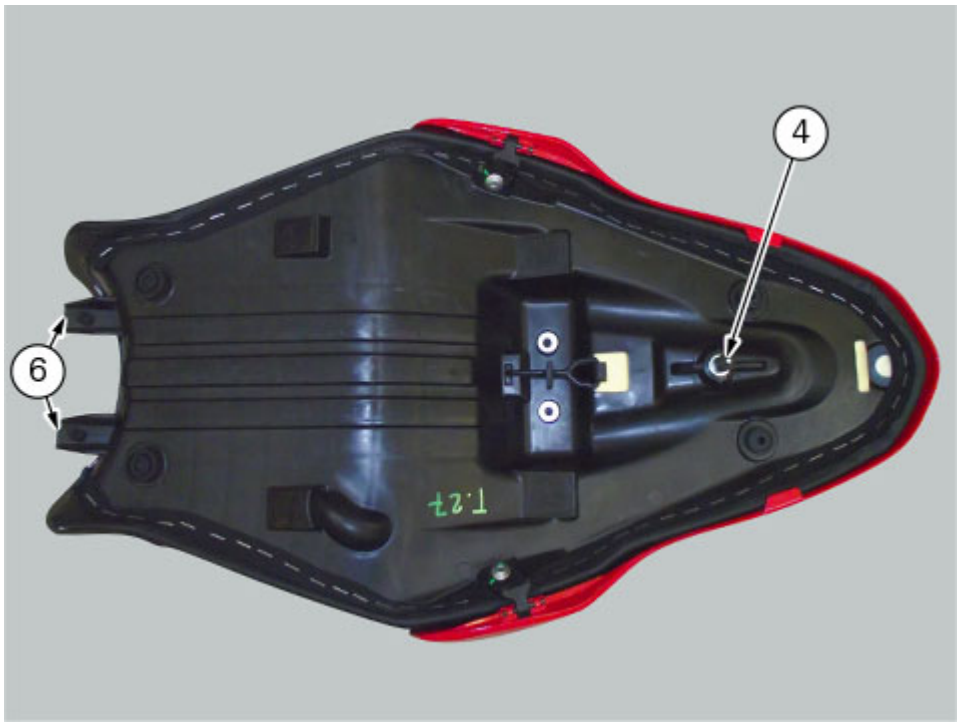
4
6

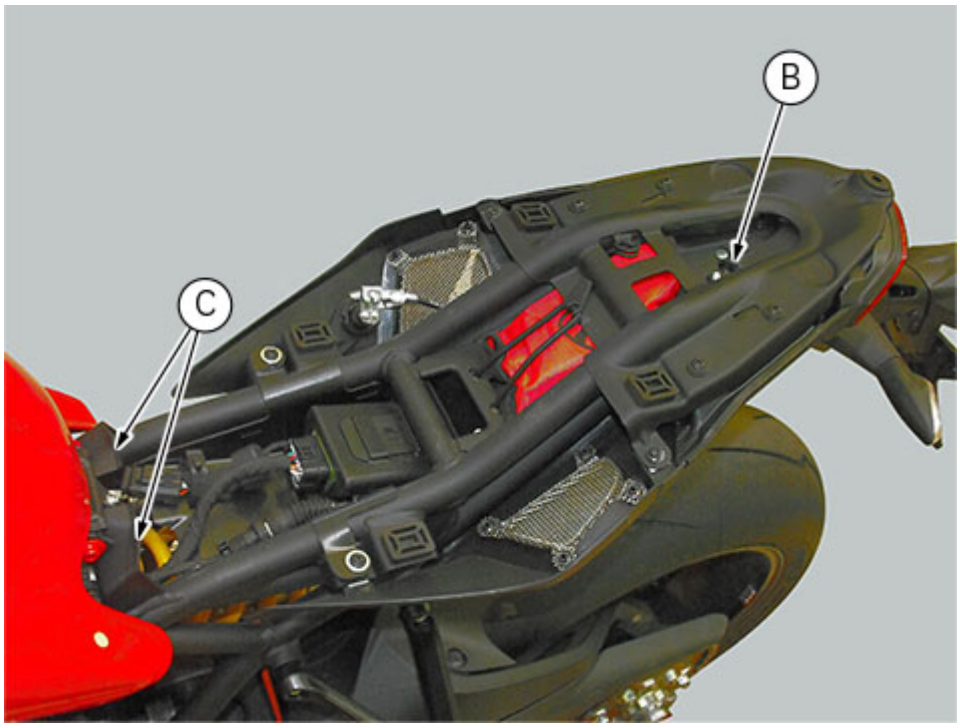
B
C

Removing the seat

Open lock and lift seat (1) from behind, then remove it.



REMOVING THE SEAT COVER

If necessary, loosen the two lower screws (3), remove seat cover (2) and replace it.

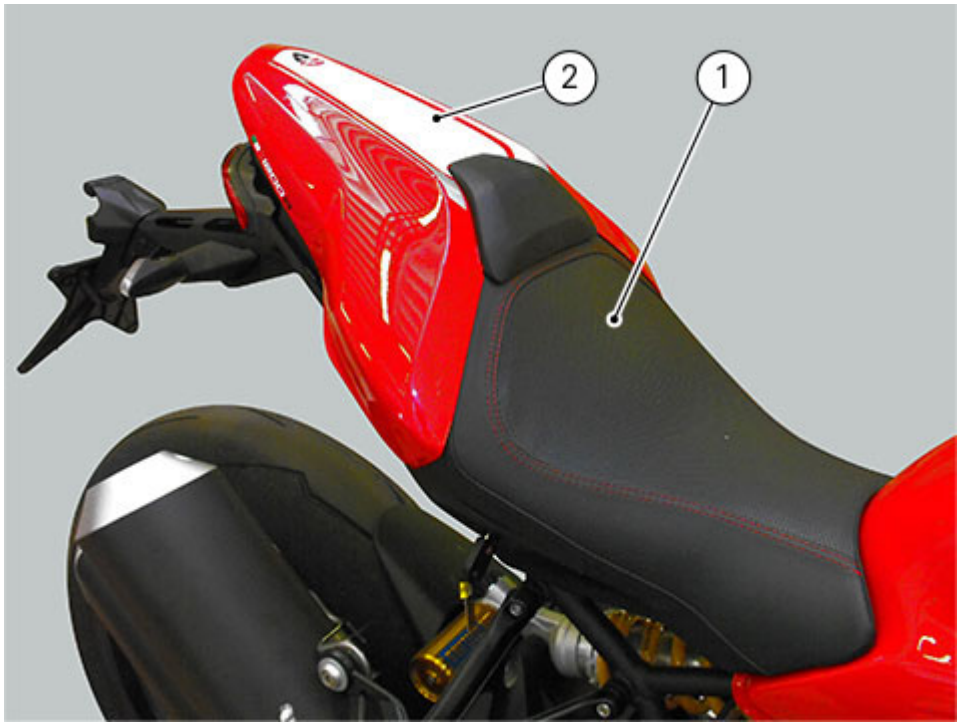

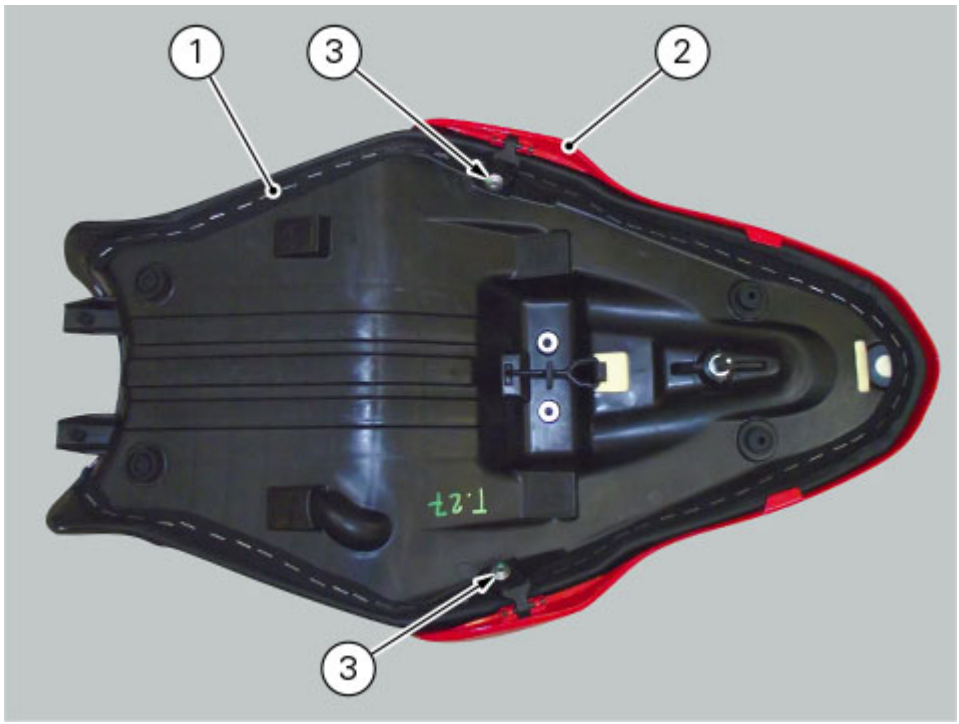
1
3
2
3

Refitting the rear mudguard

Fit rear mudguard (1) on swinging arm, inserting it from the RH side, and securing recess with screws (2). Tighten the screw (2) to a torque of 5Nm ± 10%.

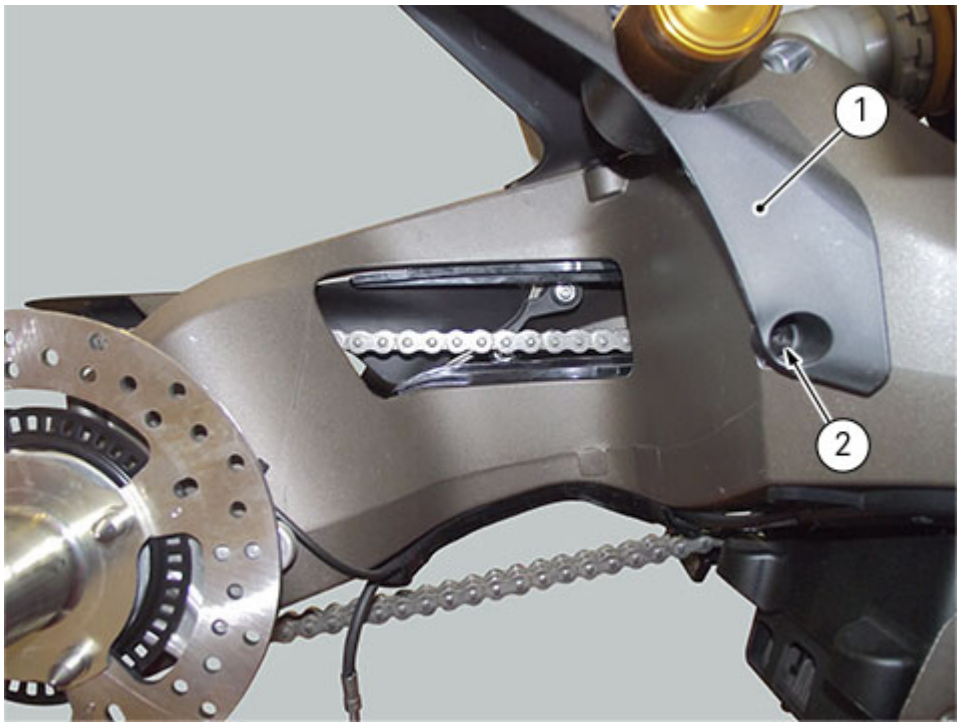

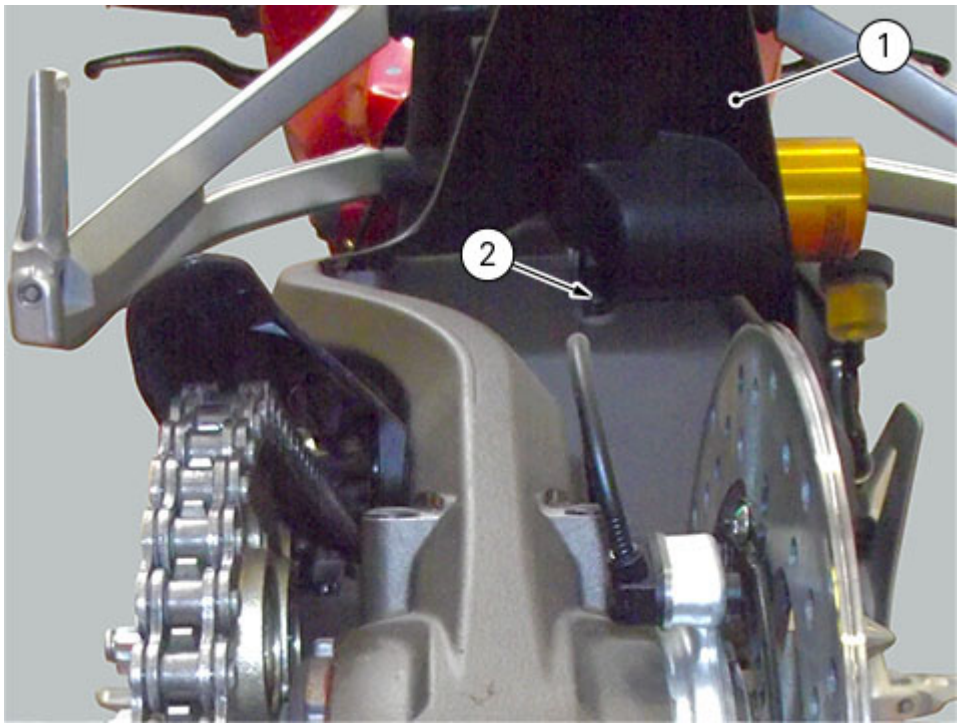

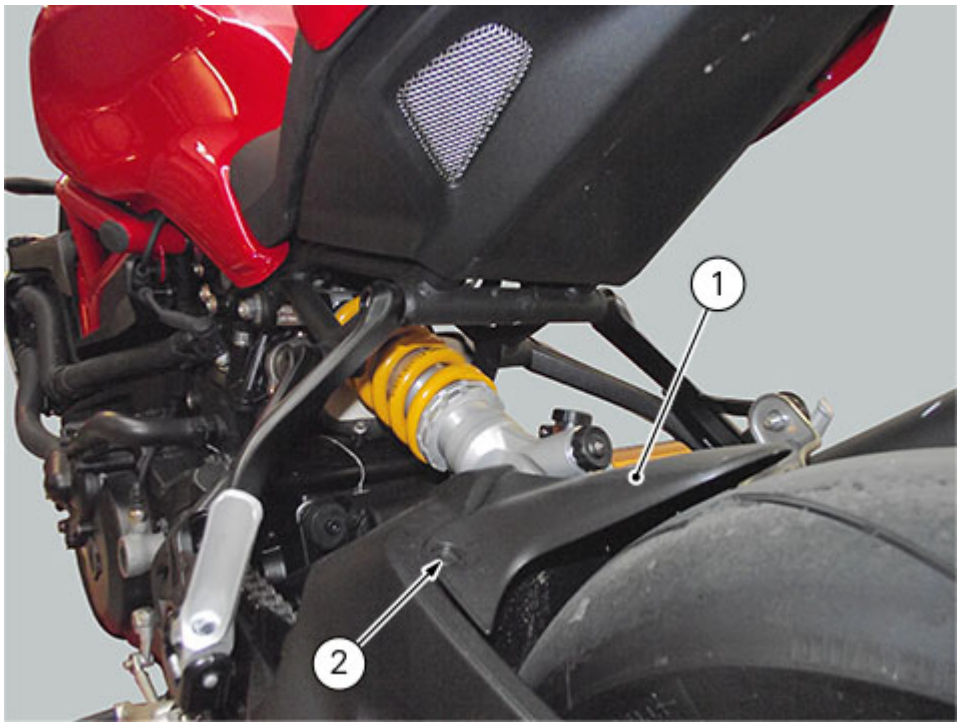

When screws (2) are removed for the third time, replace them with new screws of the same type with pre-applied threadlocker.

After having refitted the rear mudguard (1), you must refit the rear wheel (Refitting the rear wheel) as well as the exhaust silencer (3) (Refitting the exhaust silencer).

Removing the rear mudguard

To remove rear mudguard (1), you must remove rear wheel (Removing the rear wheel) as well as the exhaust silencer (Removing the exhaust silencer).
The three retaining screws (2) are arranged where indicated.

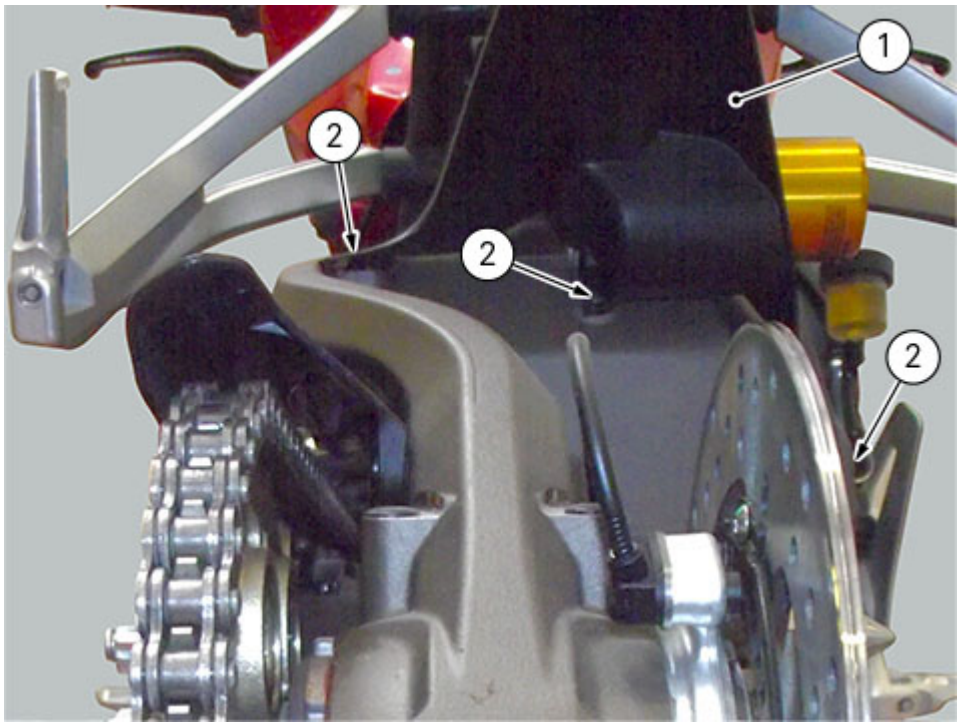

Loosen screws (2) and slide mudguard (1) out from below and to the RH side, taking care not to damage it.

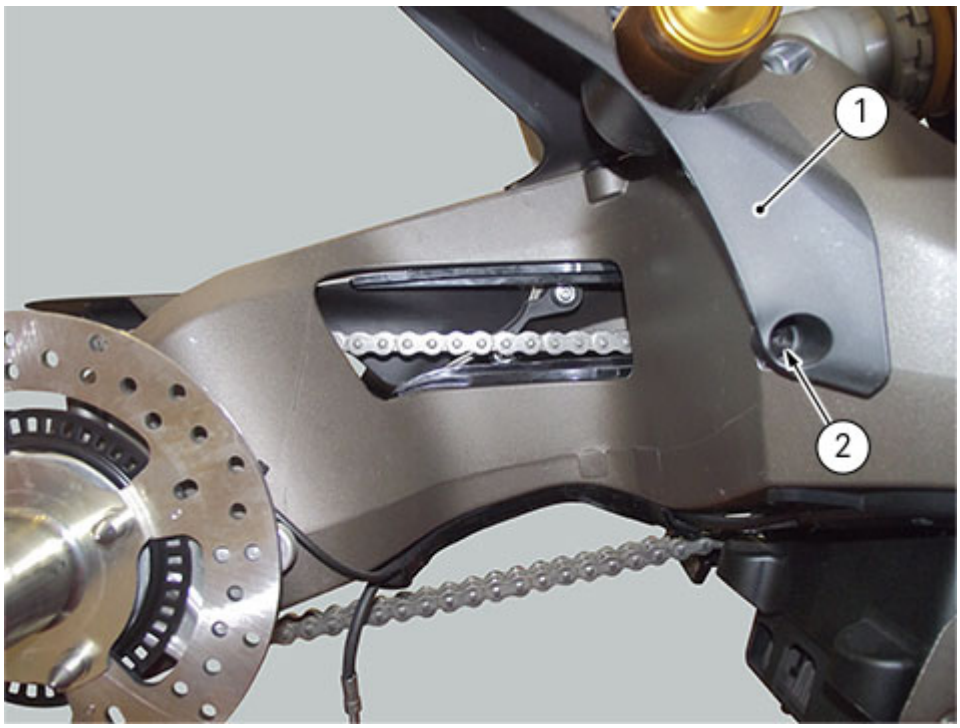

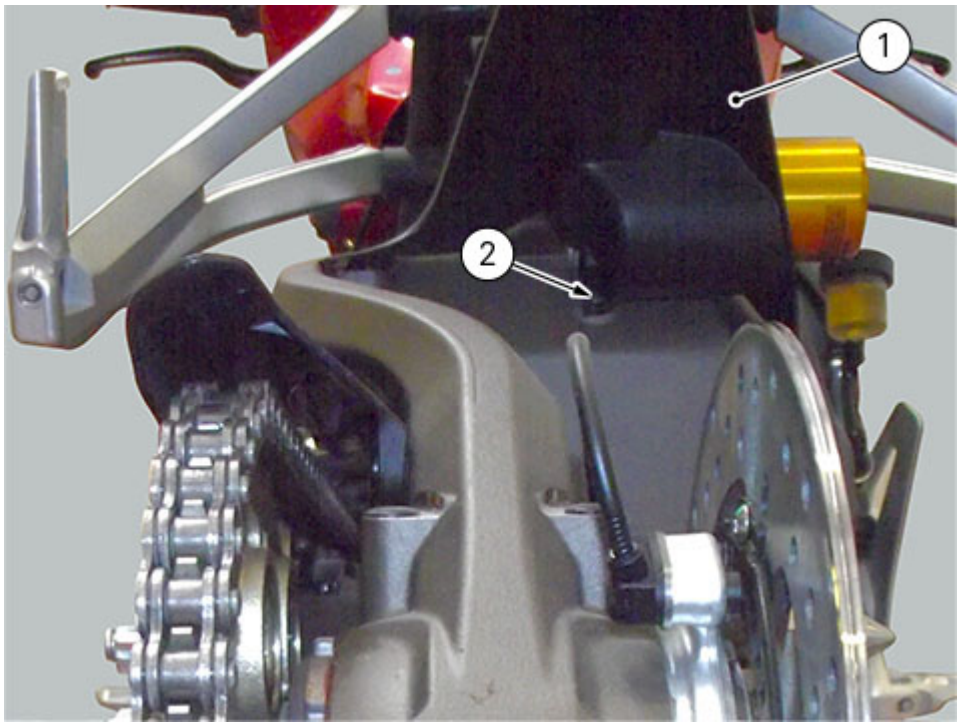
1
2

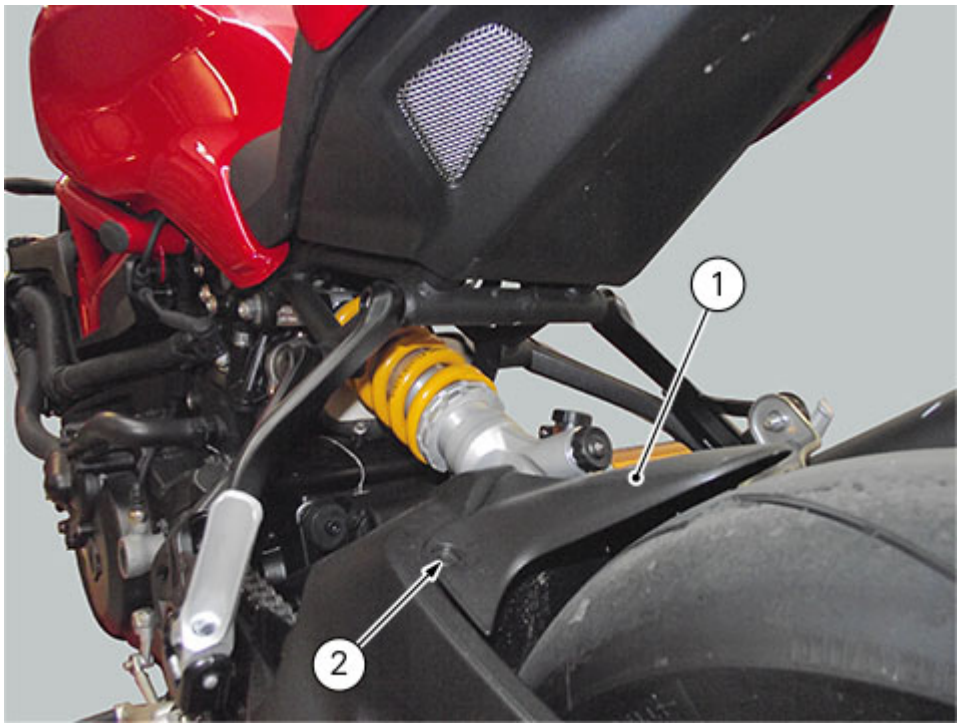
1
2

Refitting the front mudguard

Position the front mudguard (3) between the two forks and move it up to the fork bottom ends.
Position the cables of the front braking system and the speed sensor on cable ring (2) of front mudguard (3).
Fix it to the mudguard by fitting lower washer and tightening screw (1) to a torque of 0.4Nm±10%.

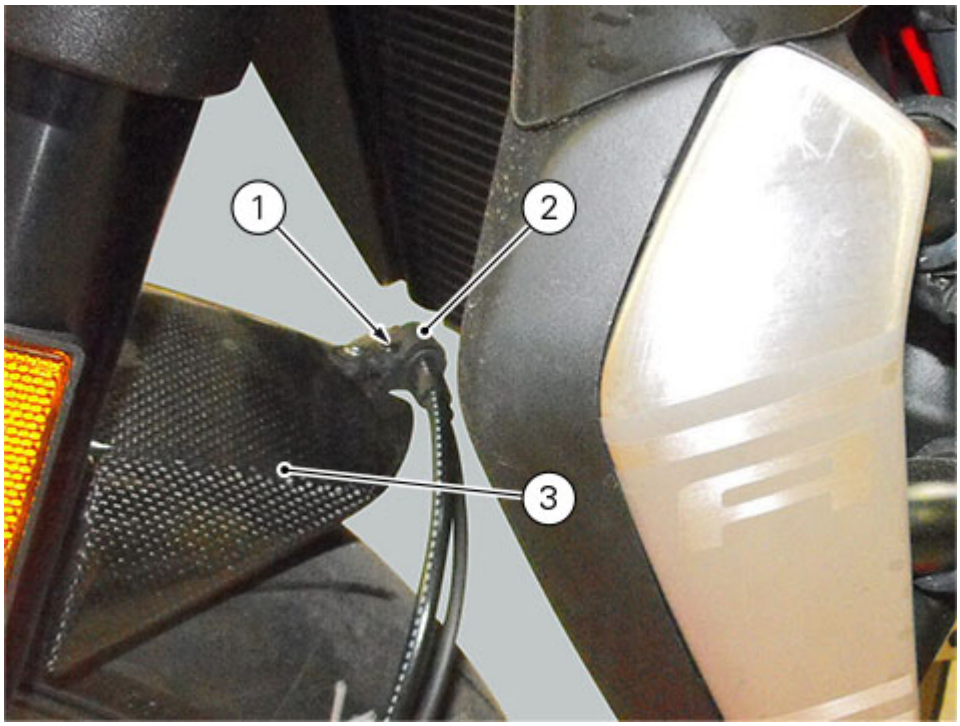

When screws (4) are installed for the third time, replace them with screws of the same type with pre-applied threadlocker.
Fit teflon lower washer to the relevant screw (4).
Tighten the screws (4) to a torque of 5Nm ± 10 %.

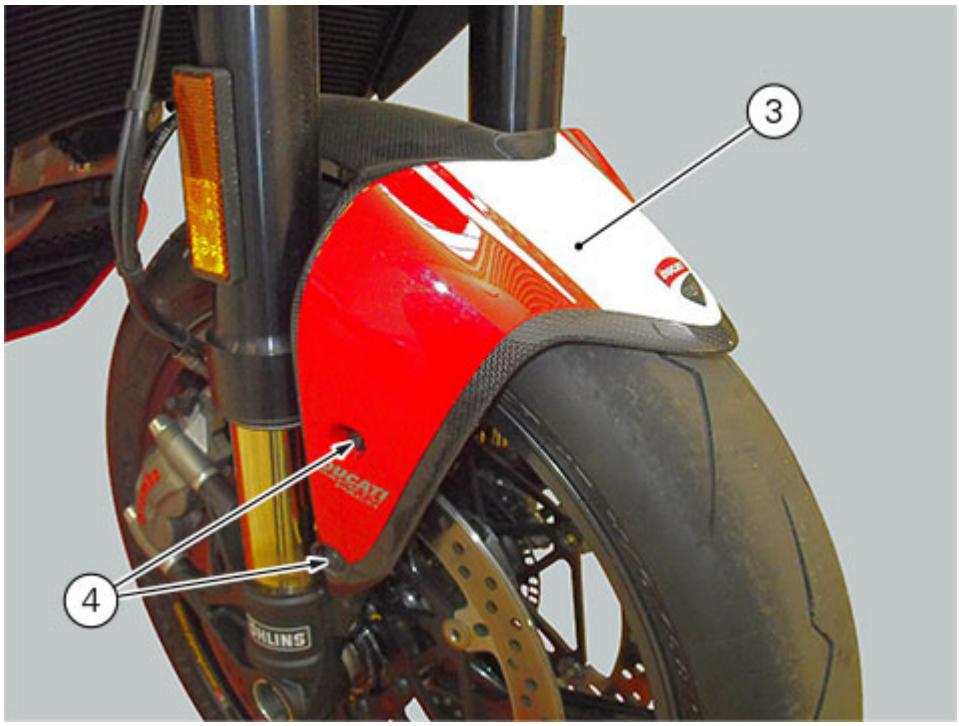

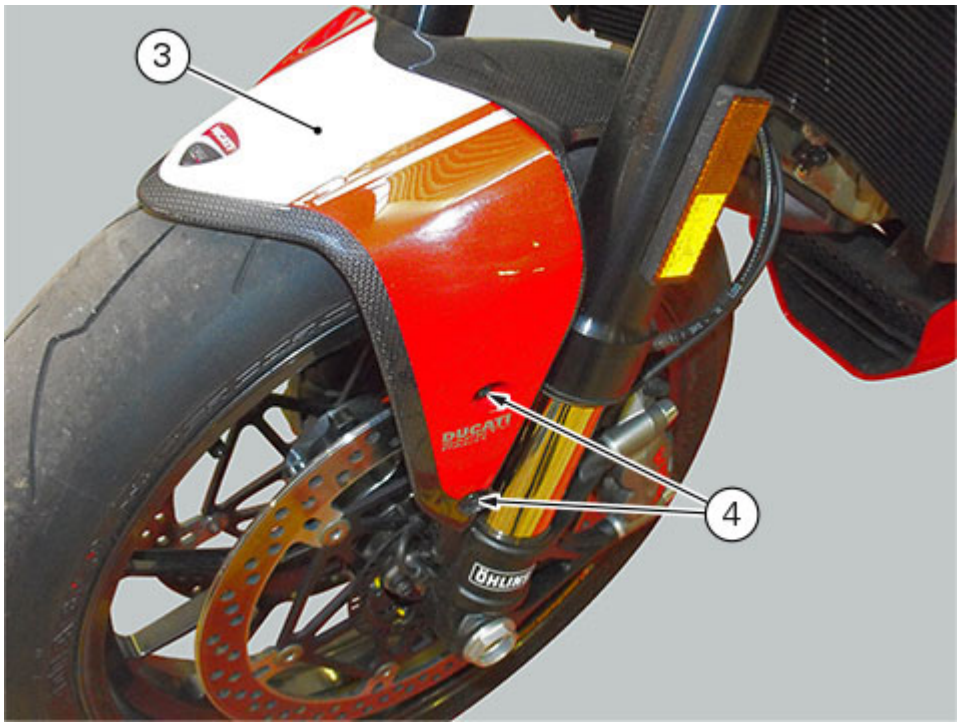
3
4

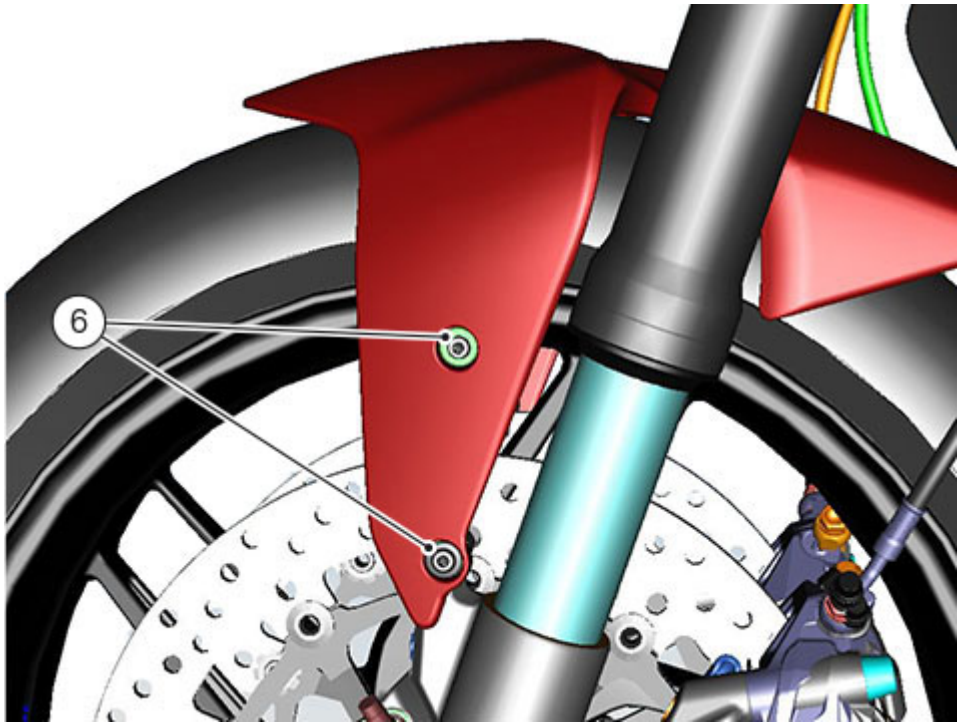
6


2.
LOCK
4
5

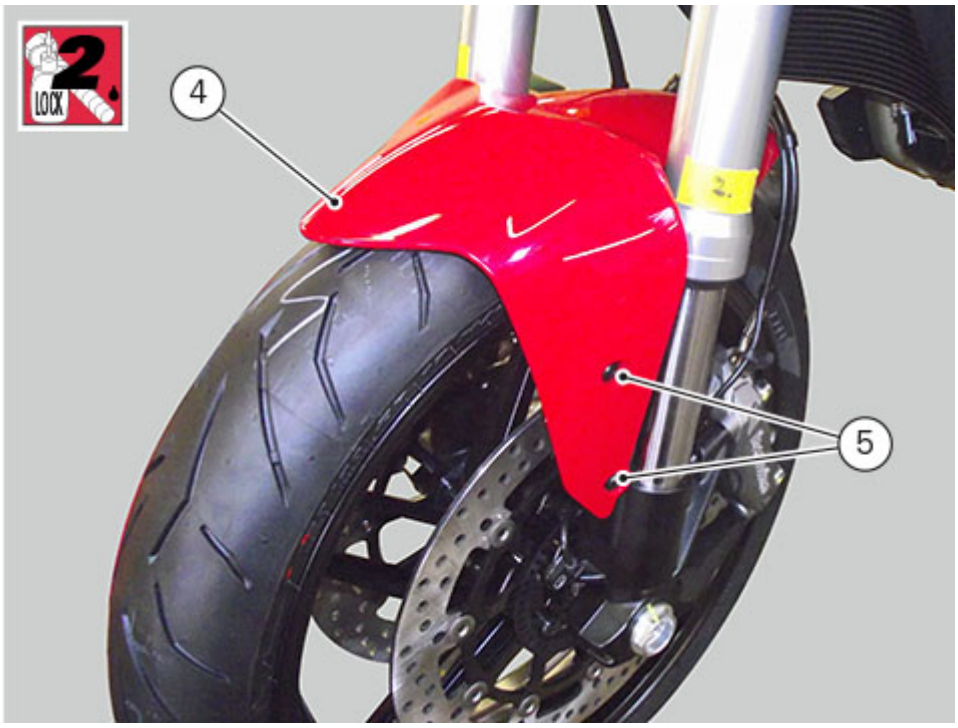
2.
LOCK
4
5

Removing the front mudguard

Loosen screw (1) and collect lower washer, slide cable ring (2) out of front mudguard (3).

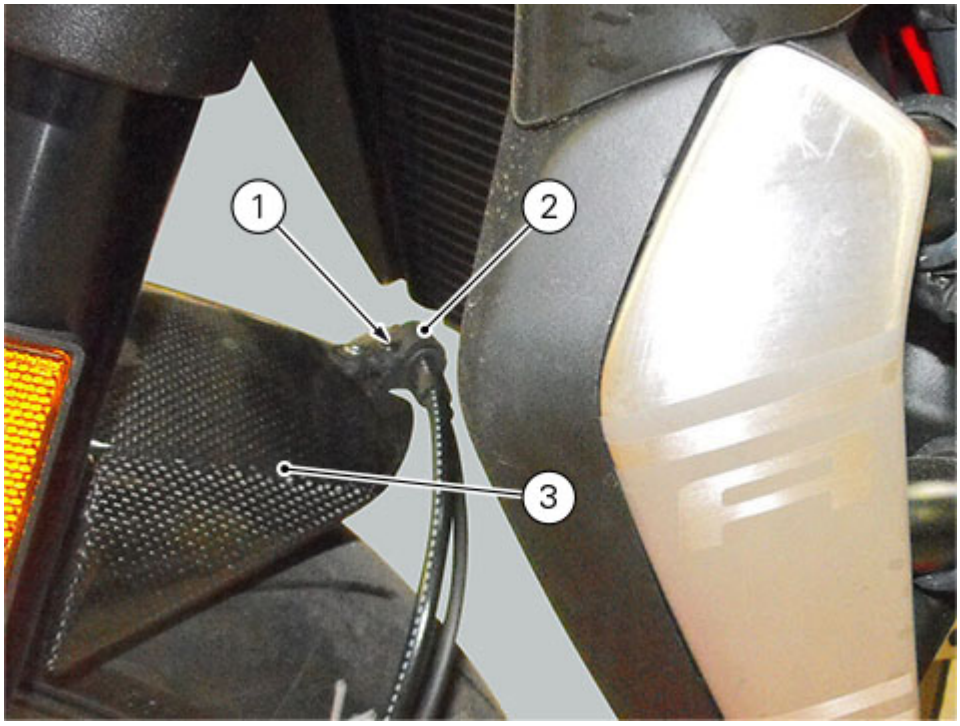

Loosen screws (4) that retain the front mudguard (3) and collect the relevant teflon washers on both sides.

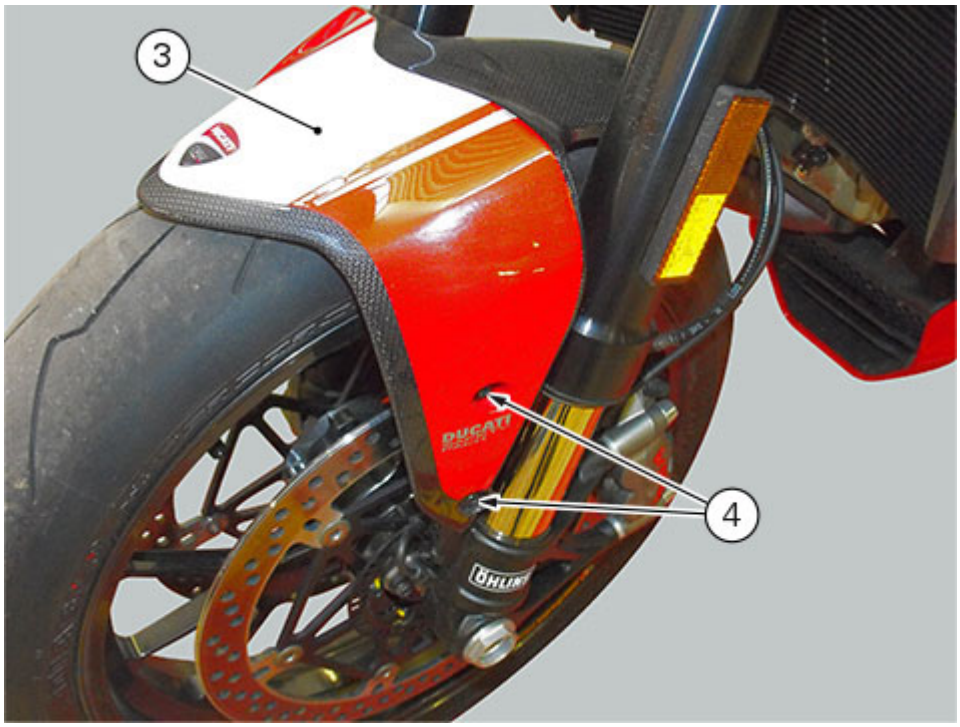

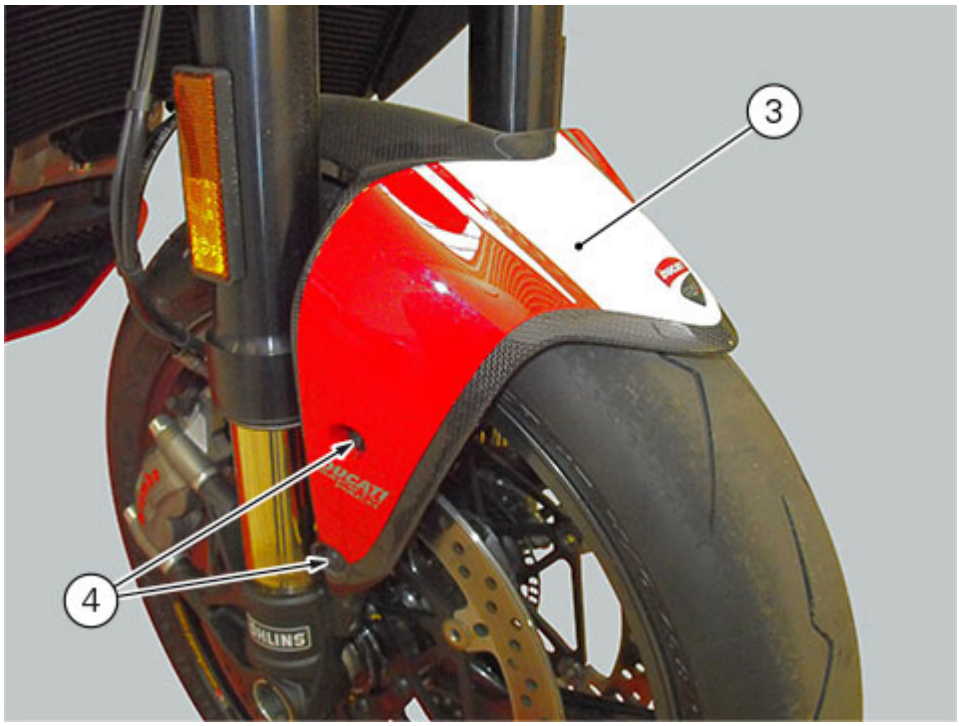

Slide out front mudguard (3) from the front side having care not to damage the forks and the braking system.

Branch 11

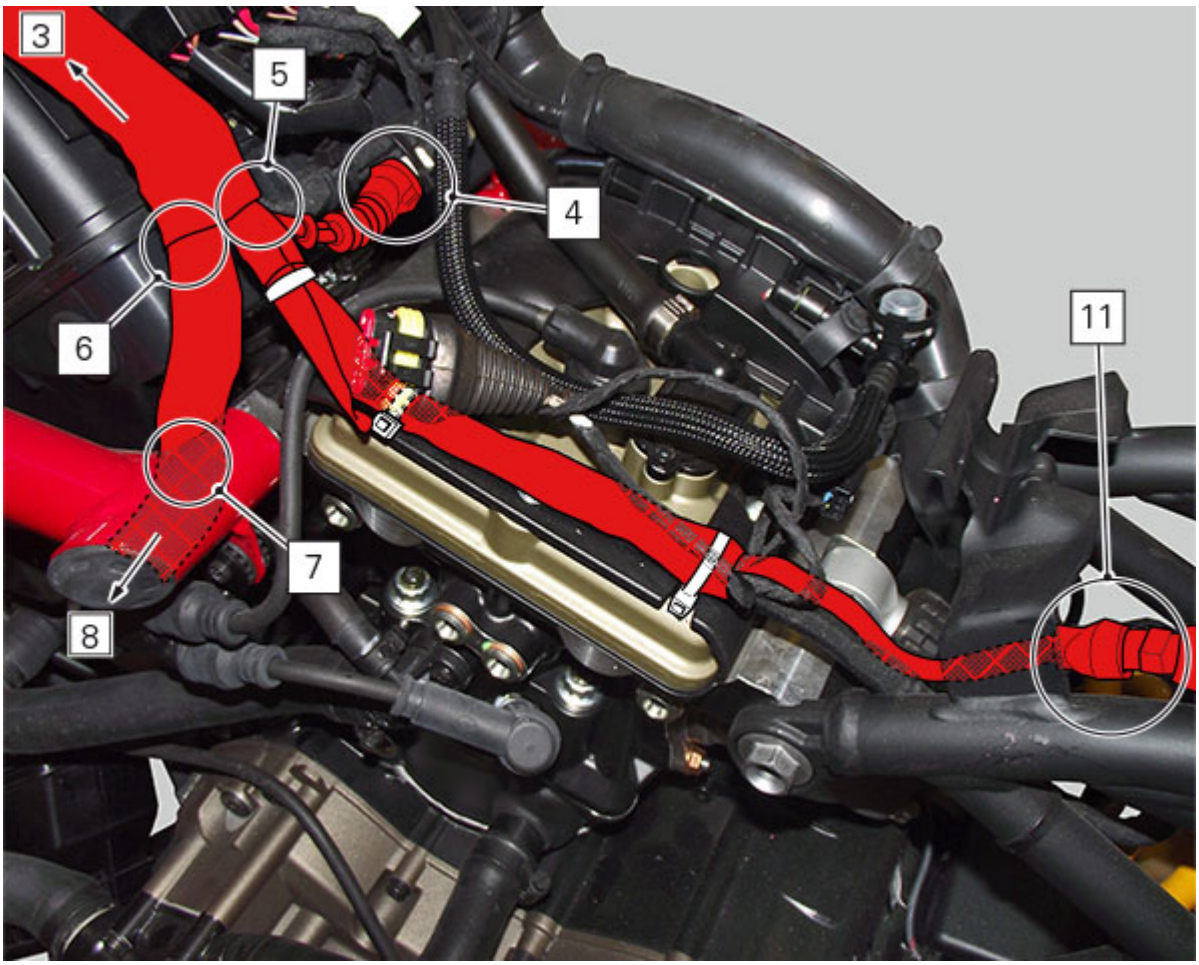

Table 11A

Pos.	DESCRIPTION
1	Rear wiring connector
2	Self-diagnosis
3	Tail light
4	Rear left turn indicator
5	Rear right turn indicator
6	Number plate light connector

Tie Black Box control unit wiring branch to rear subframe wiring (1) in point (A), as indicated.
Tie rear subframe wiring (1) to compartment, in area (B).

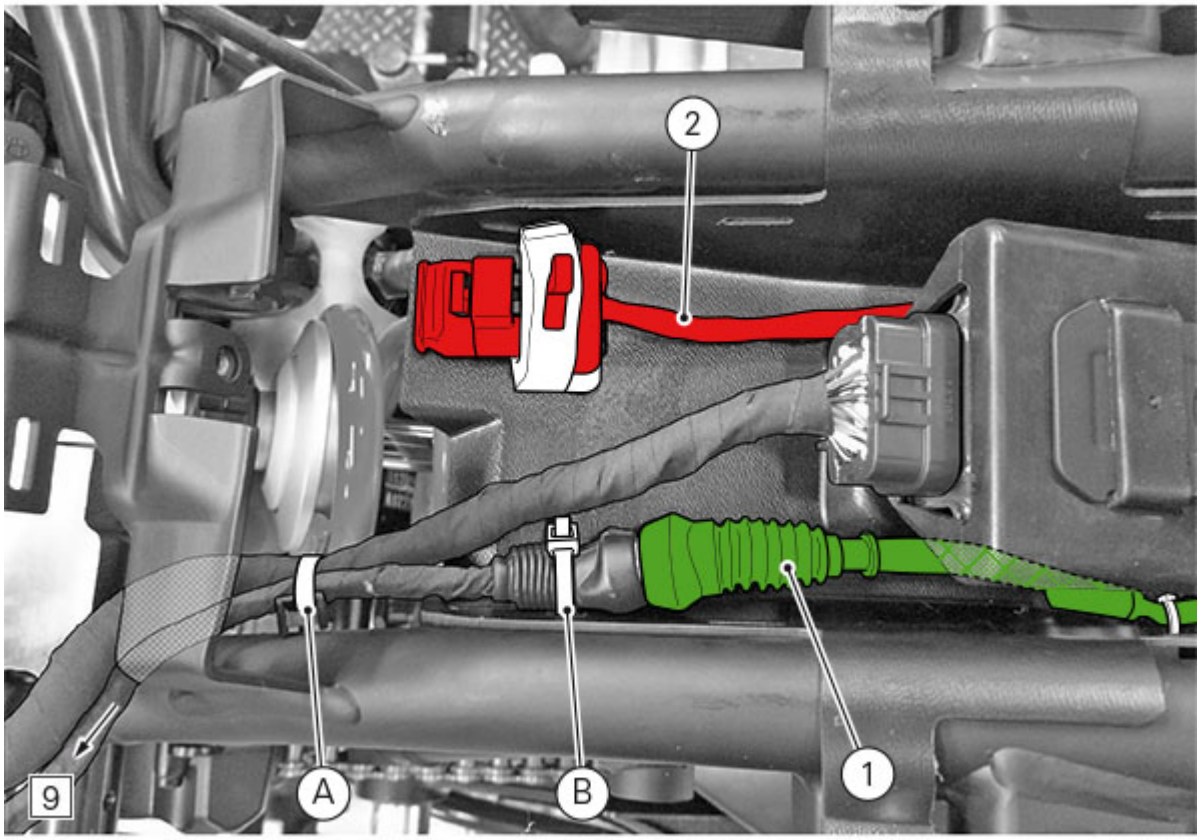
2
9
A
B
1


1

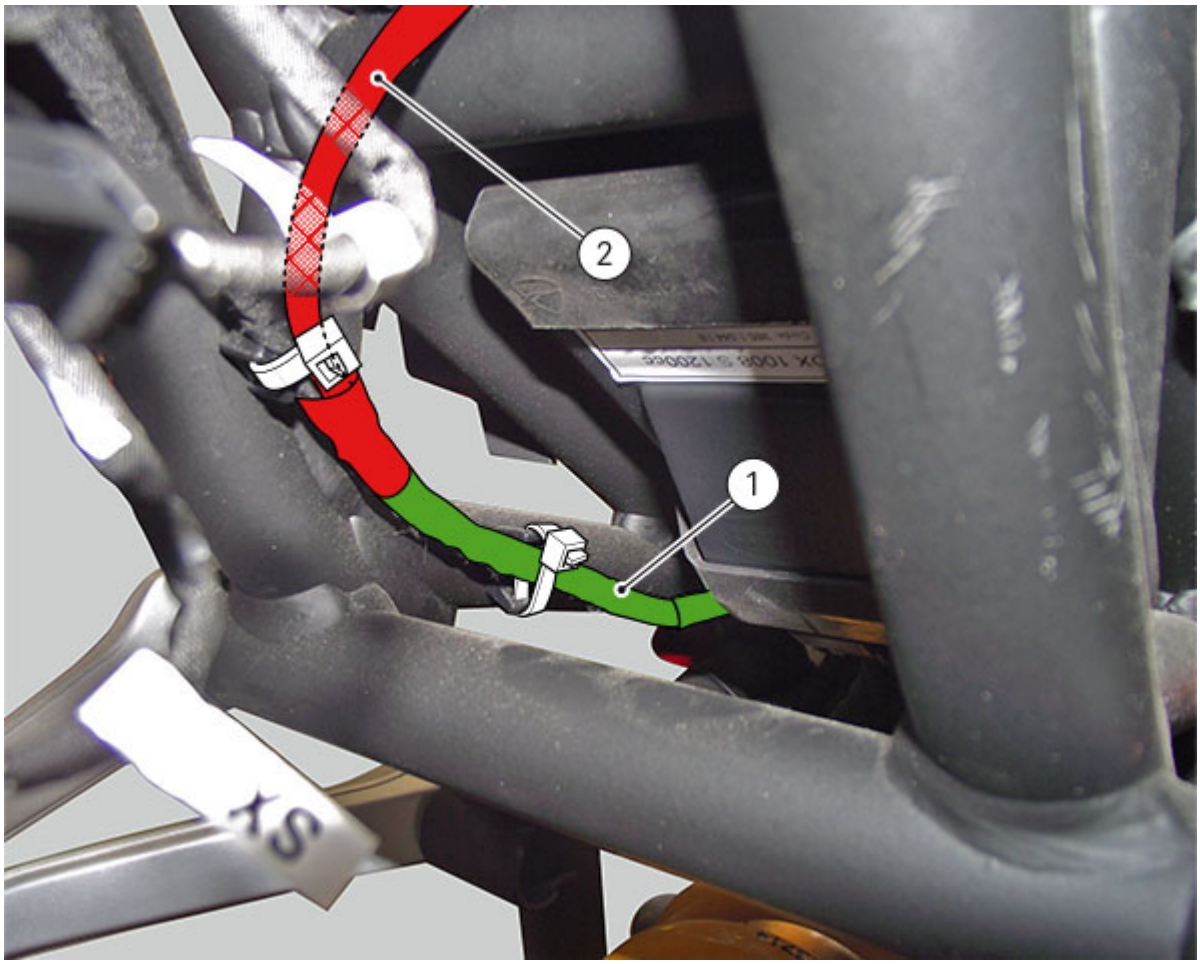
2
1

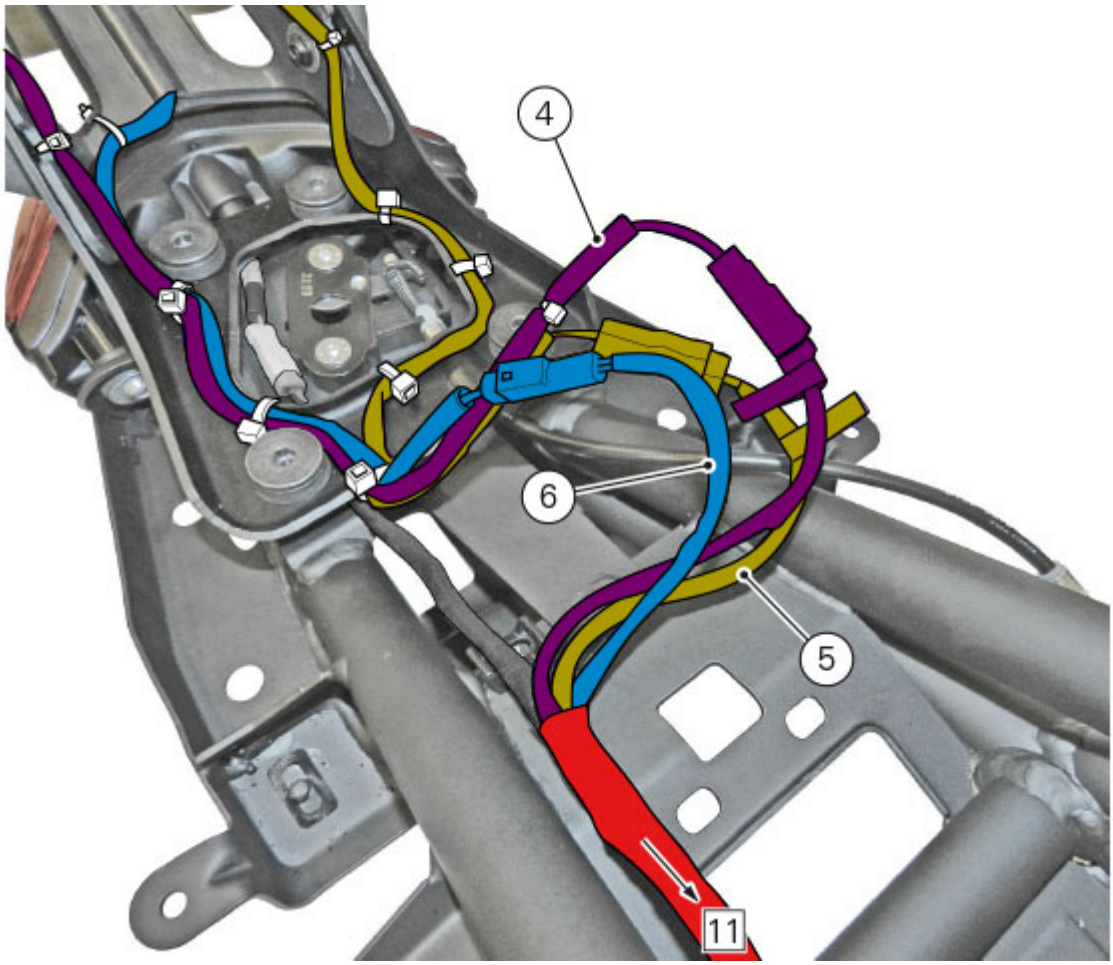
4
6
5
11

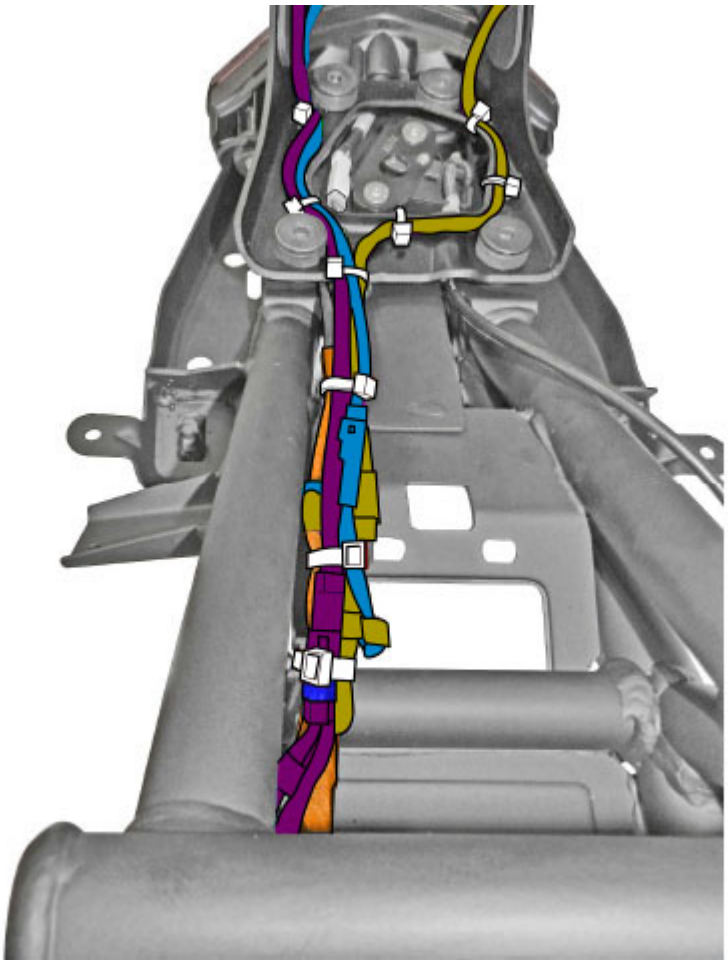

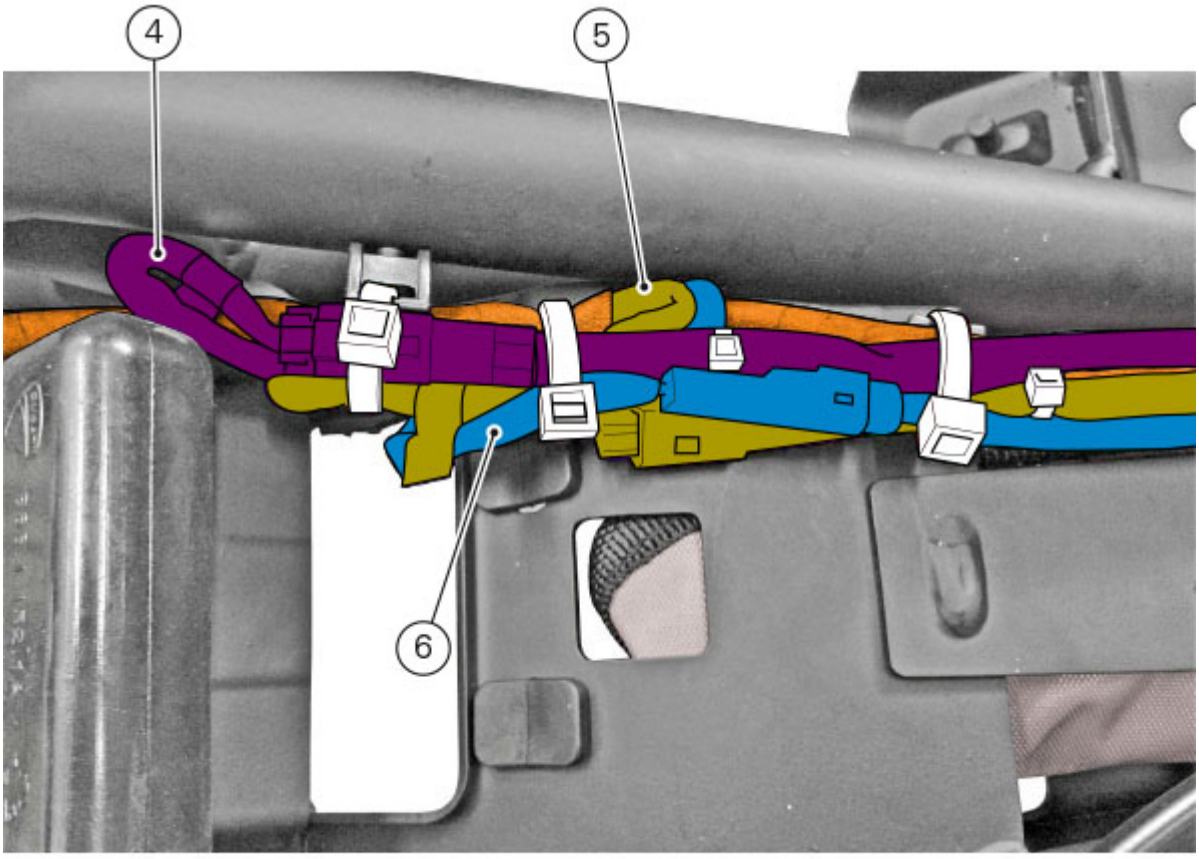
4
5
6

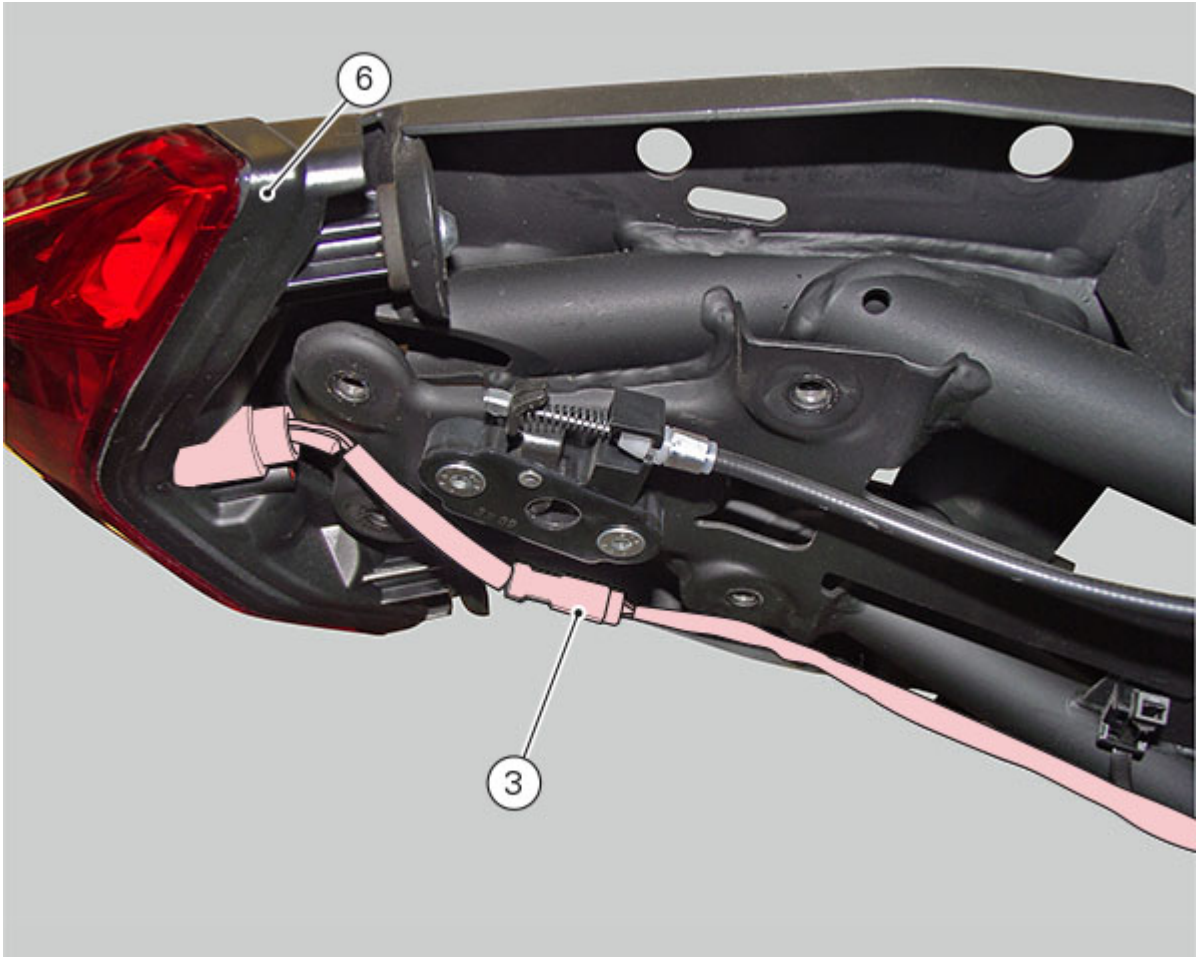

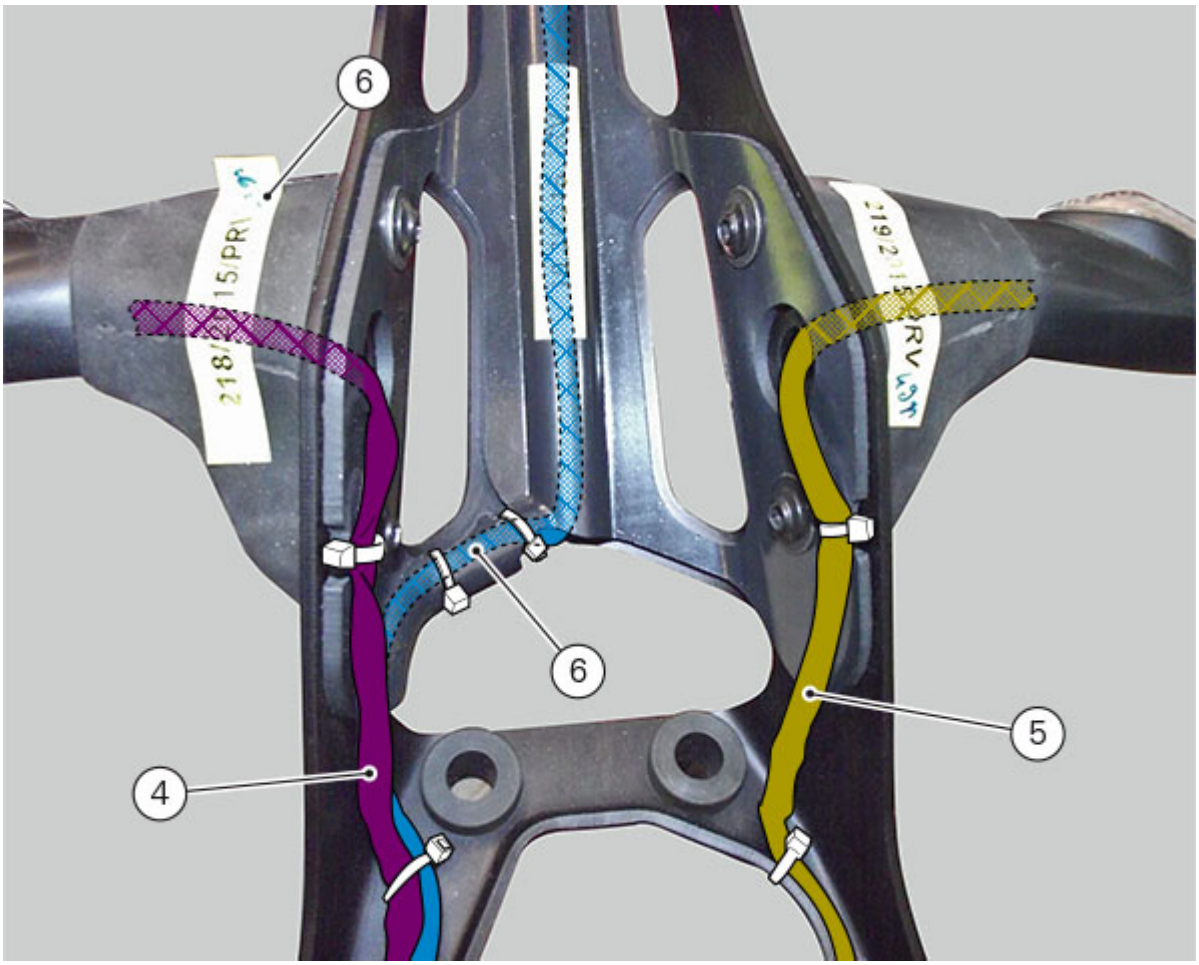

General key and "Routing wiring on frame".

Branch 10

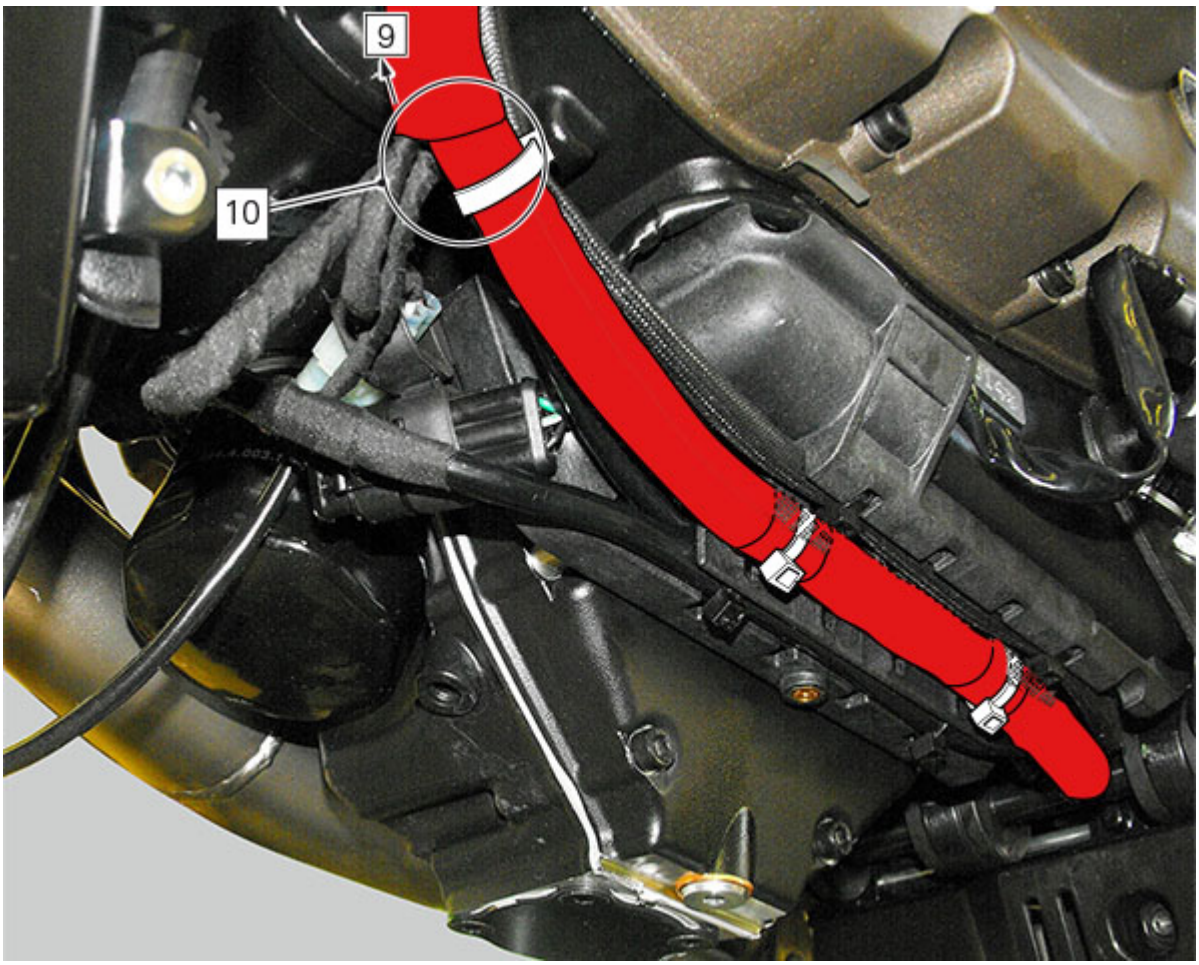

Table 10A

Pos.	DESCRIPTION
1	Horn
2	Oil pressure switch

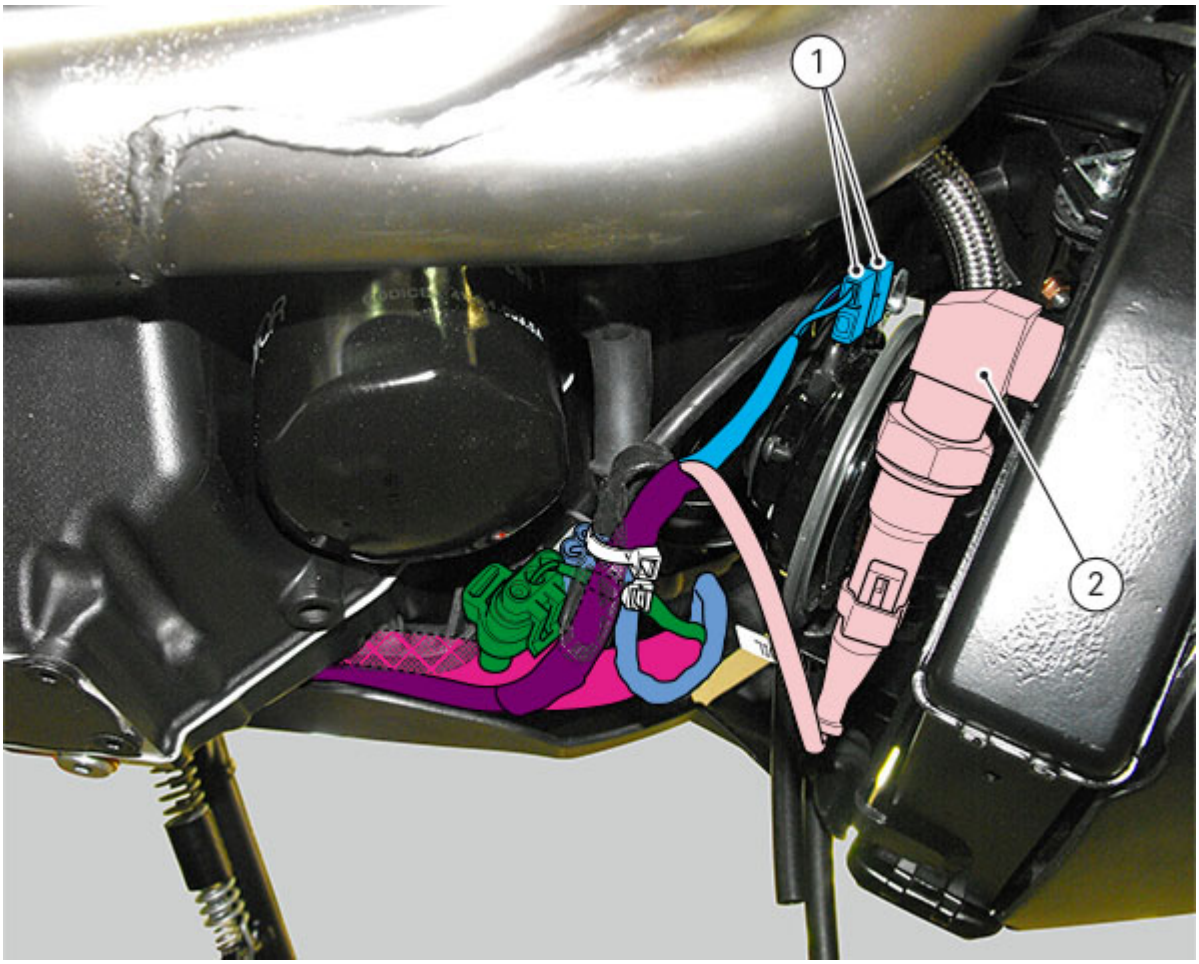

Table 10B

Pos.	DESCRIPTION
3	Side stand
4	Horizontal exhaust oxygen sensor
13	Remote control switch - Starter motor cable

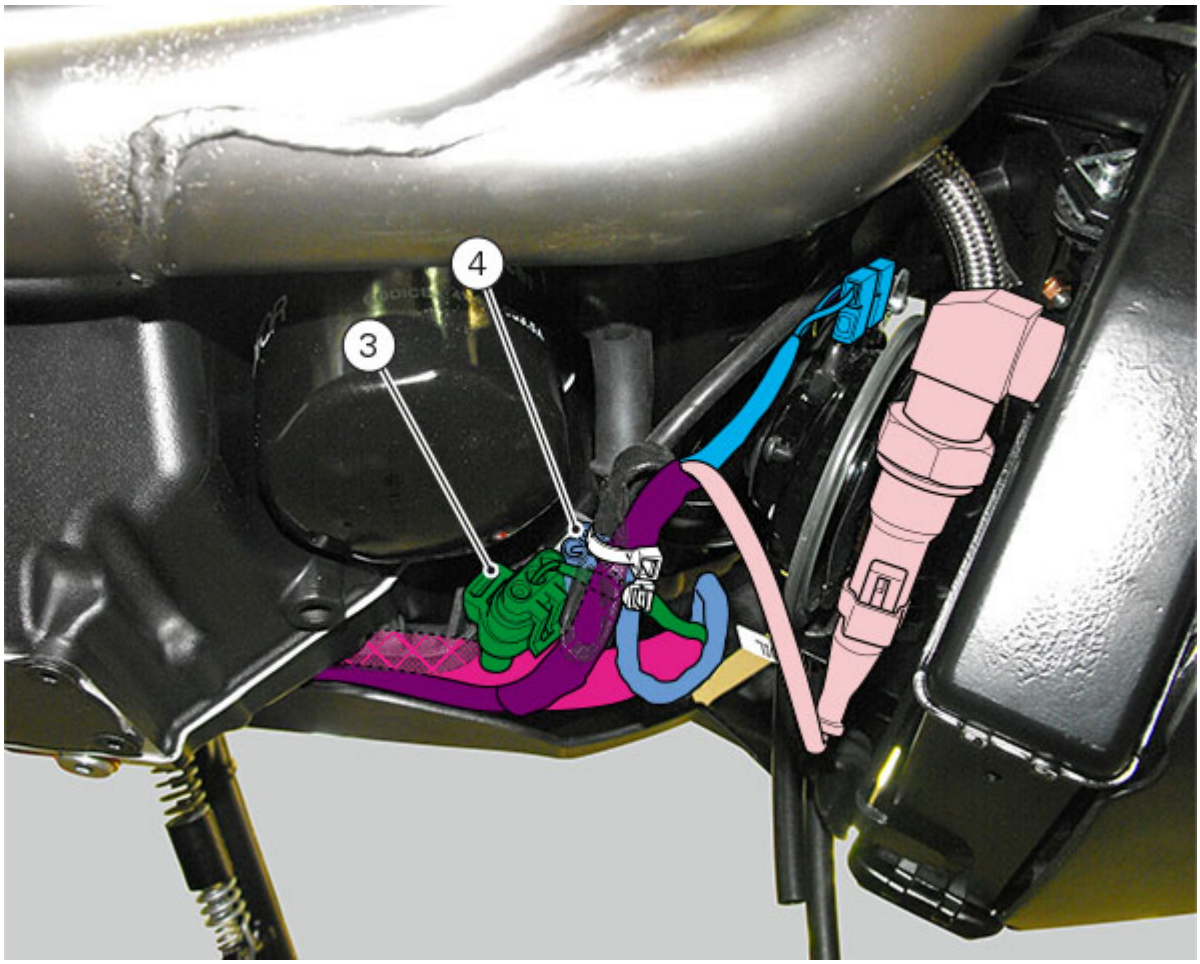
4
3

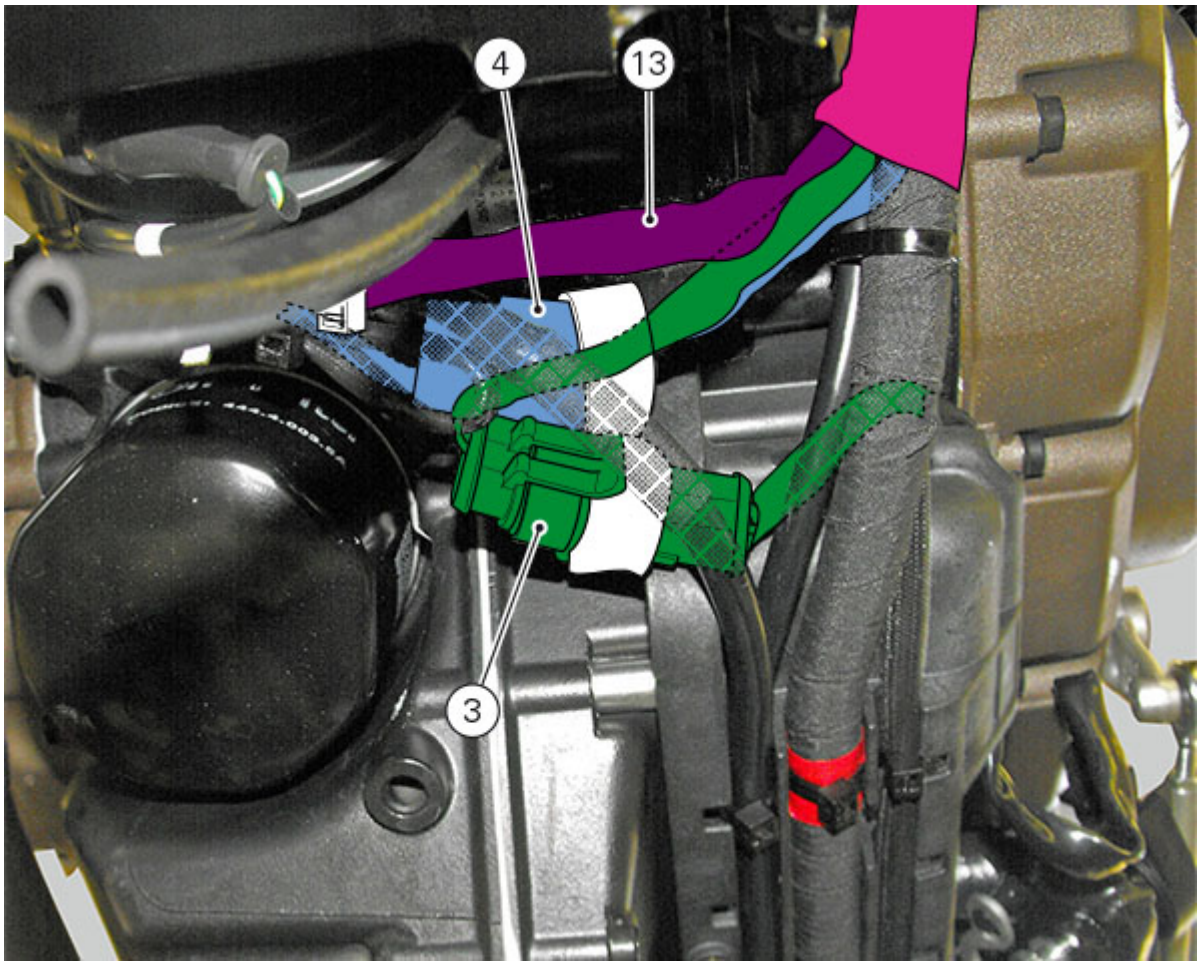
4
13
3

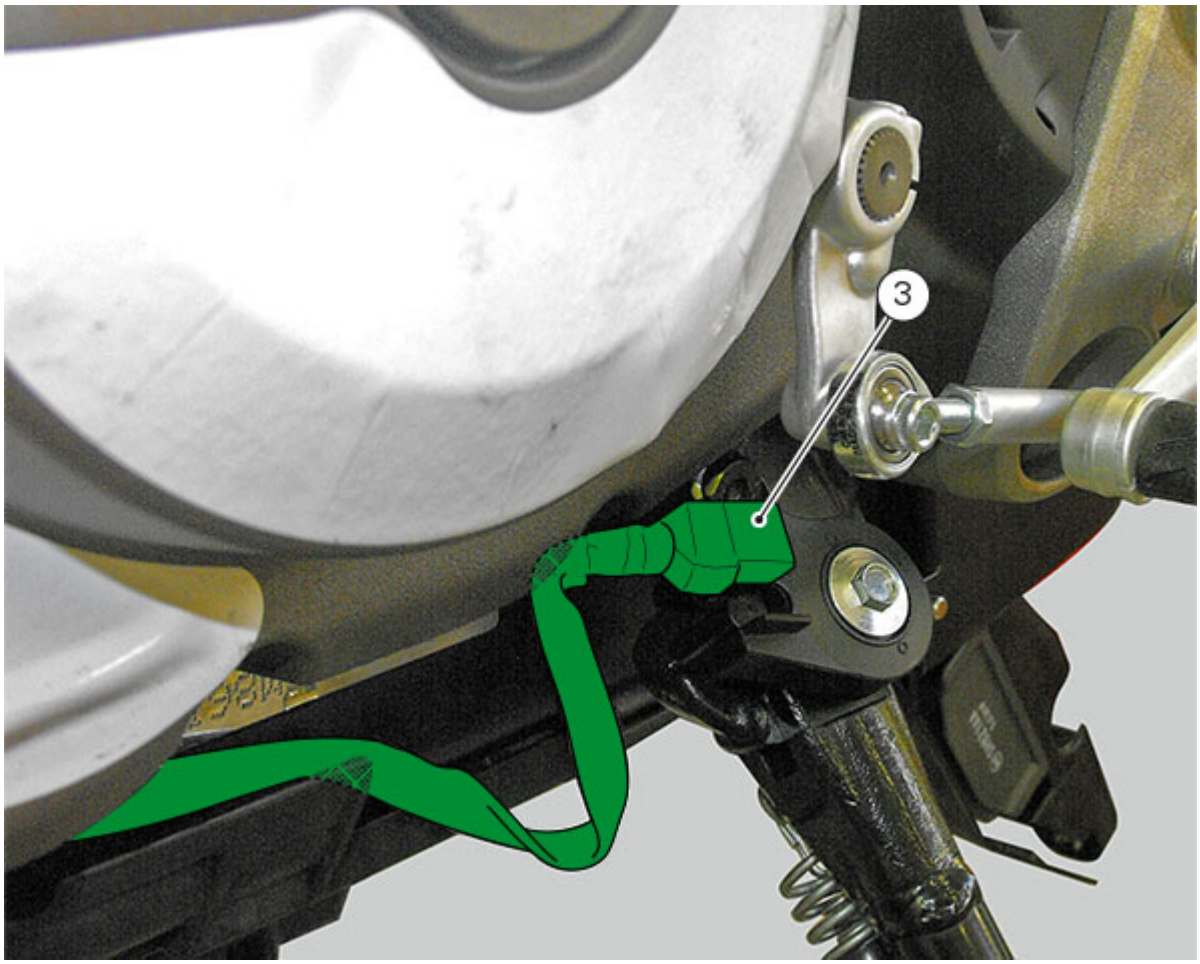
3

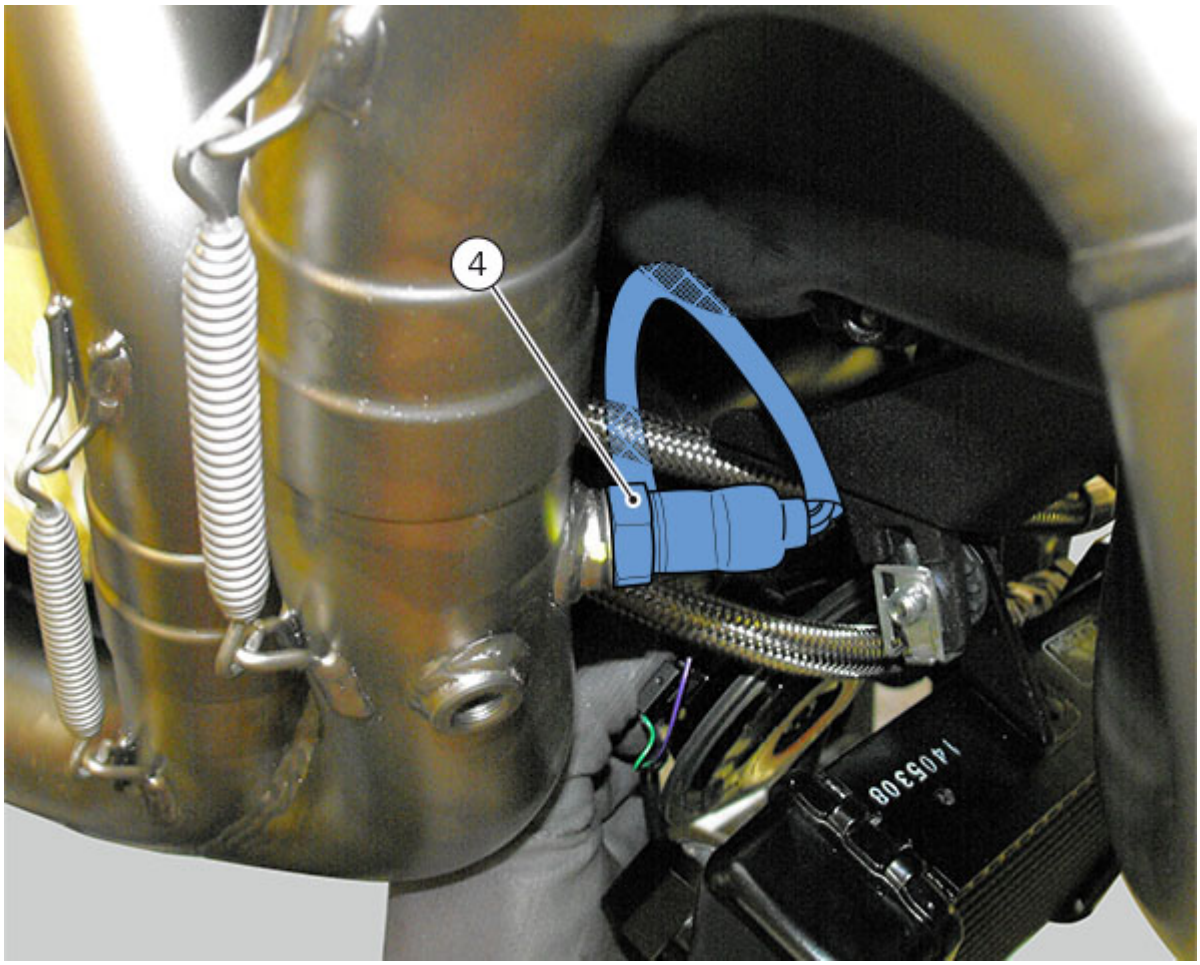
4
1405308

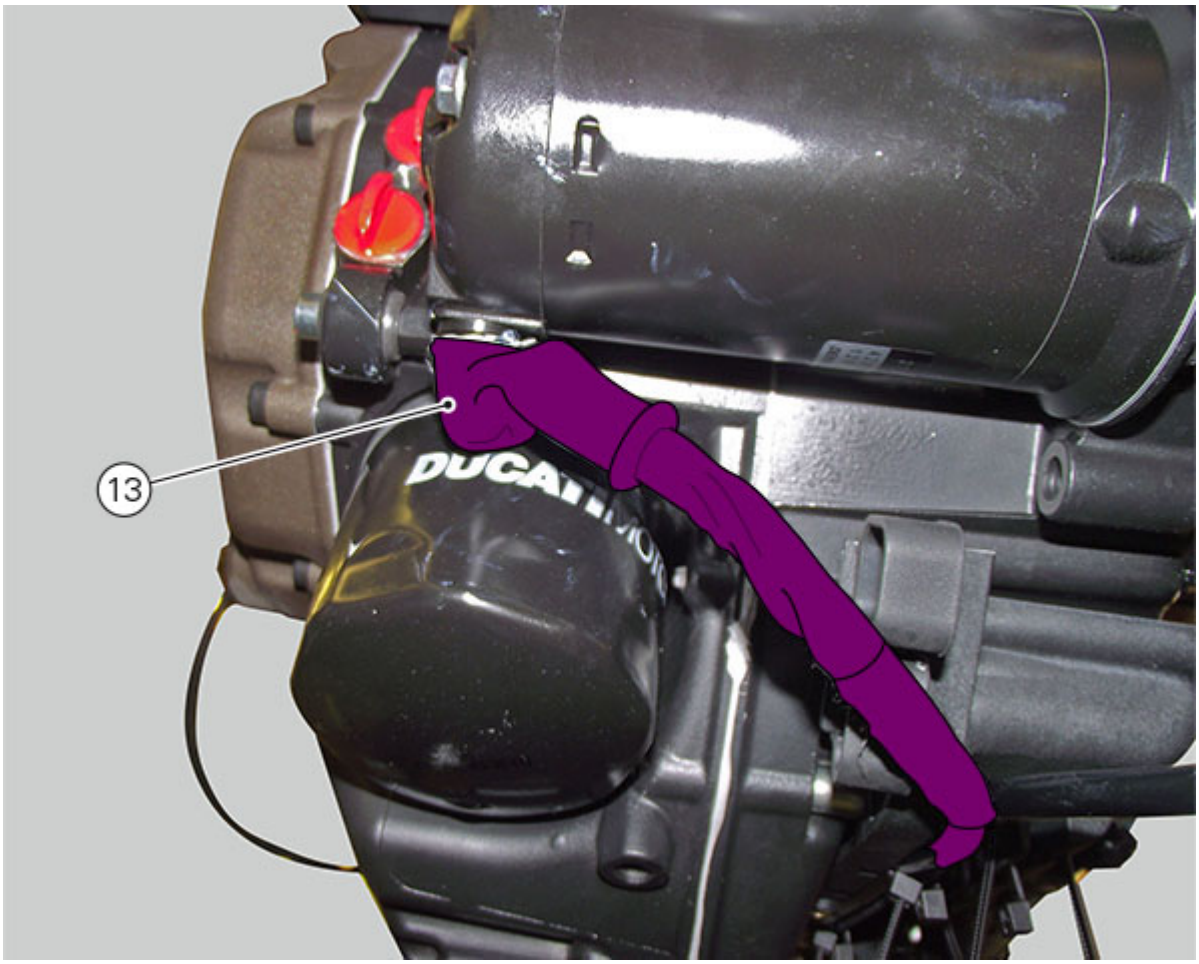

Table 10C

Pos.	DESCRIPTION
5	Voltage regulator
6	Exhaust valve motor
7	Fuse box 2
8	Fuse box 1
9	ABS positive
10	Solenoid starter
11	Gear sensor
12	Battery positive — Remote control switch cable
13	Remote control switch - Starter motor cable
14	Regulator-generator cable
15	Battery negative cable

Upon re-assembling, route wirings as indicated.

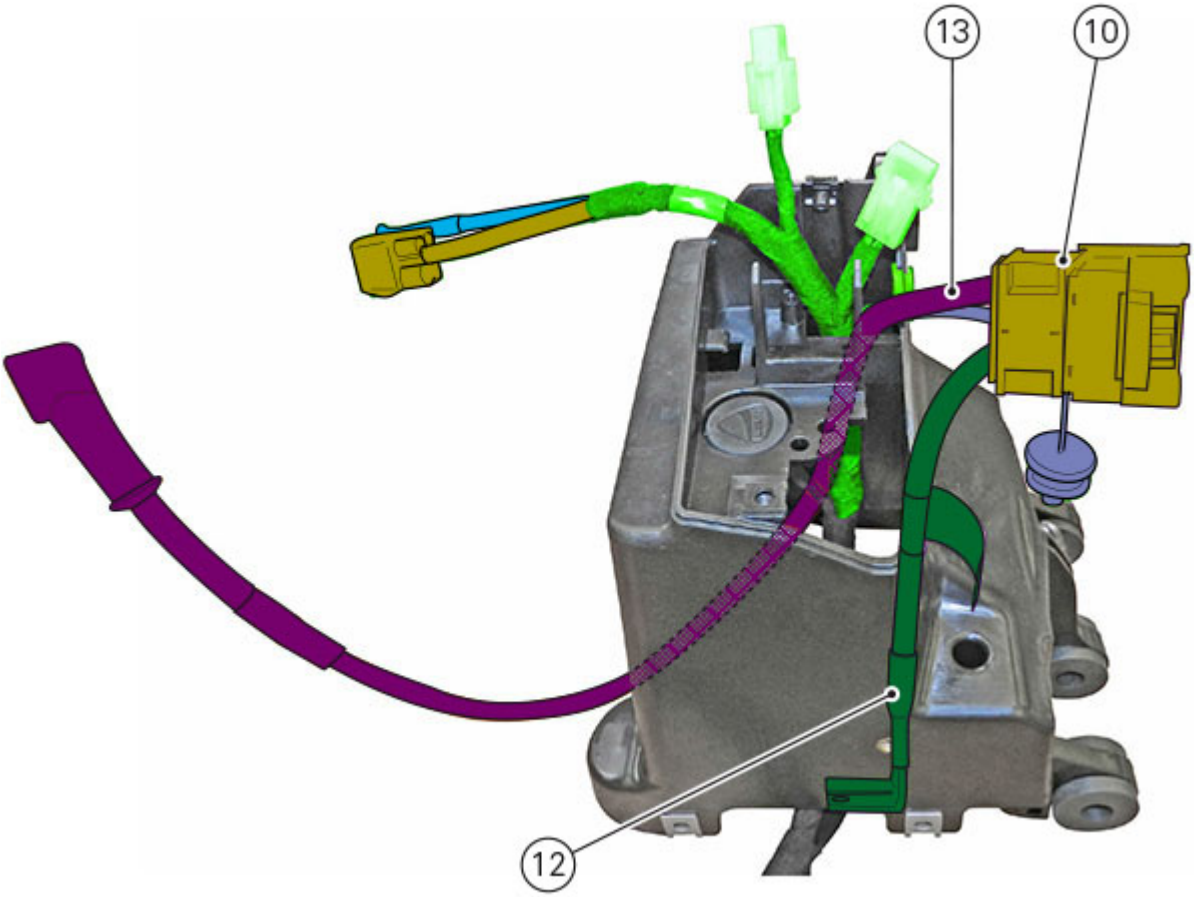

Tie together wiring branch and solenoid starter/starter motor cable (13) using the indicated tie, taking care that they are secured together close to the red taping.
Tie together wiring branch and solenoid starter/starter motor cable (13) using the indicated tie.

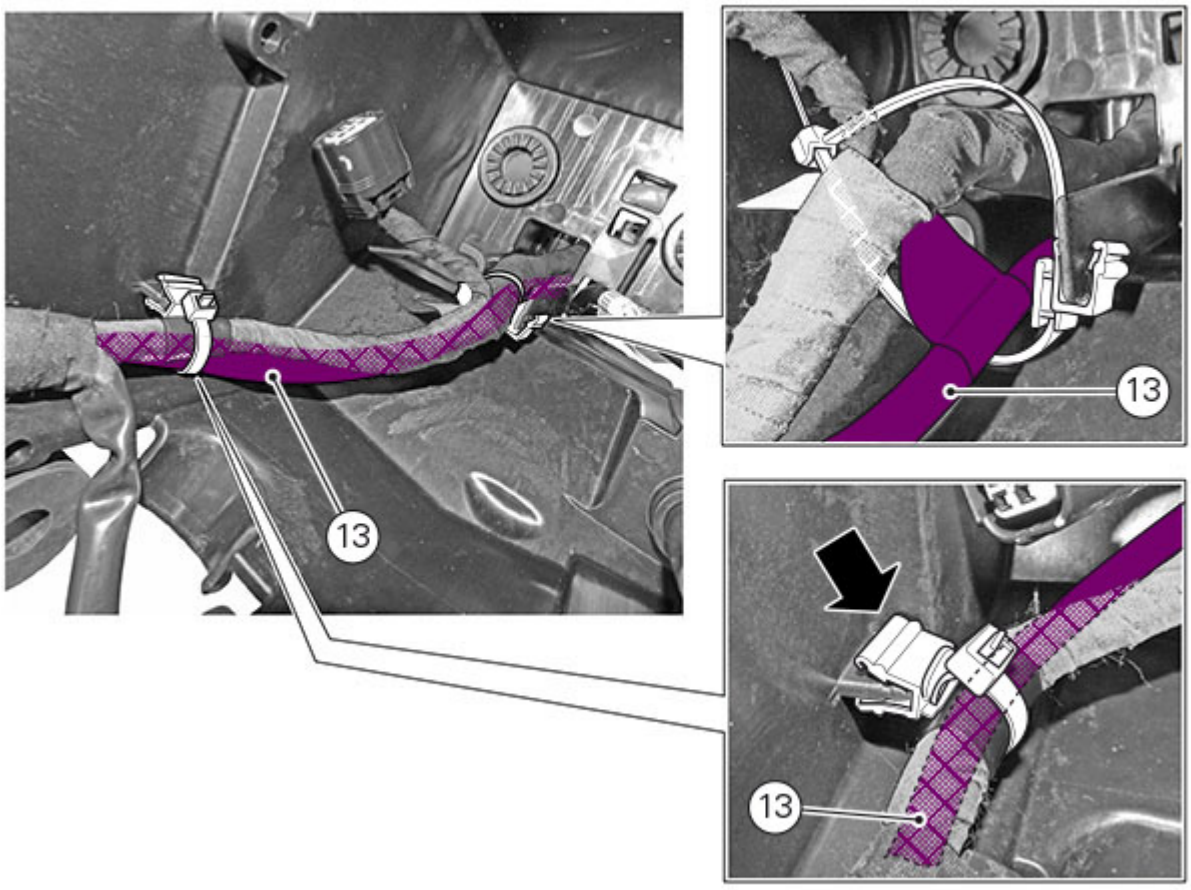

Position solenoid starter connector wiring (10) under the tooth of electrical components compartment, close to the red taping (B), as indicated.

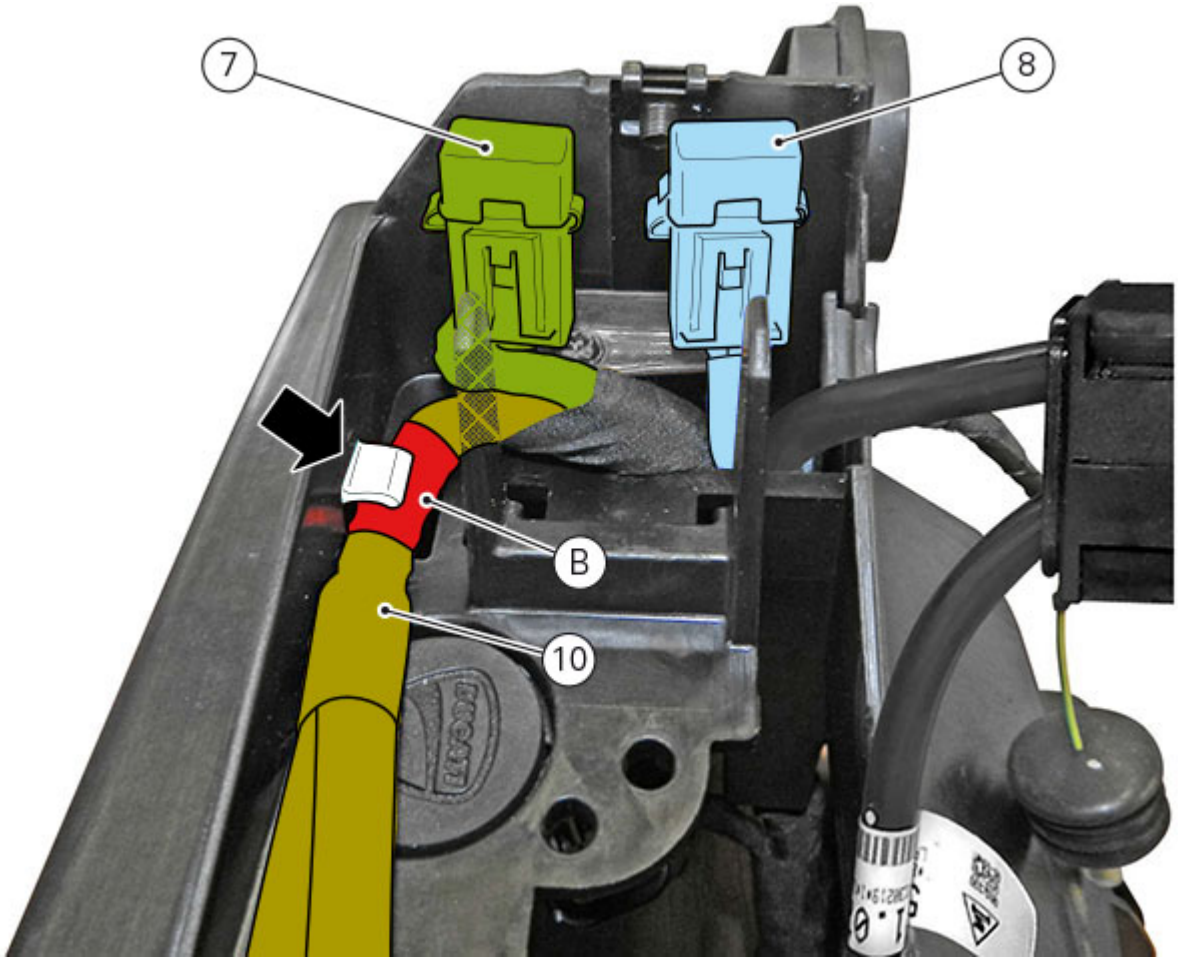

Fit service pin (C) by inserting it inside the recess present on electrical components compartment, and aim it as indicated.
Apply the indicated product on solenoid starter brackets (D).
Insert the solenoid starter unit (10) on brackets (D), folding solenoid starter/battery positive cable (12) inside the electrical components compartment.
The solenoid starter cables (10) must slide on pin (C) inner side.
Connect connector to solenoid starter unit (10).

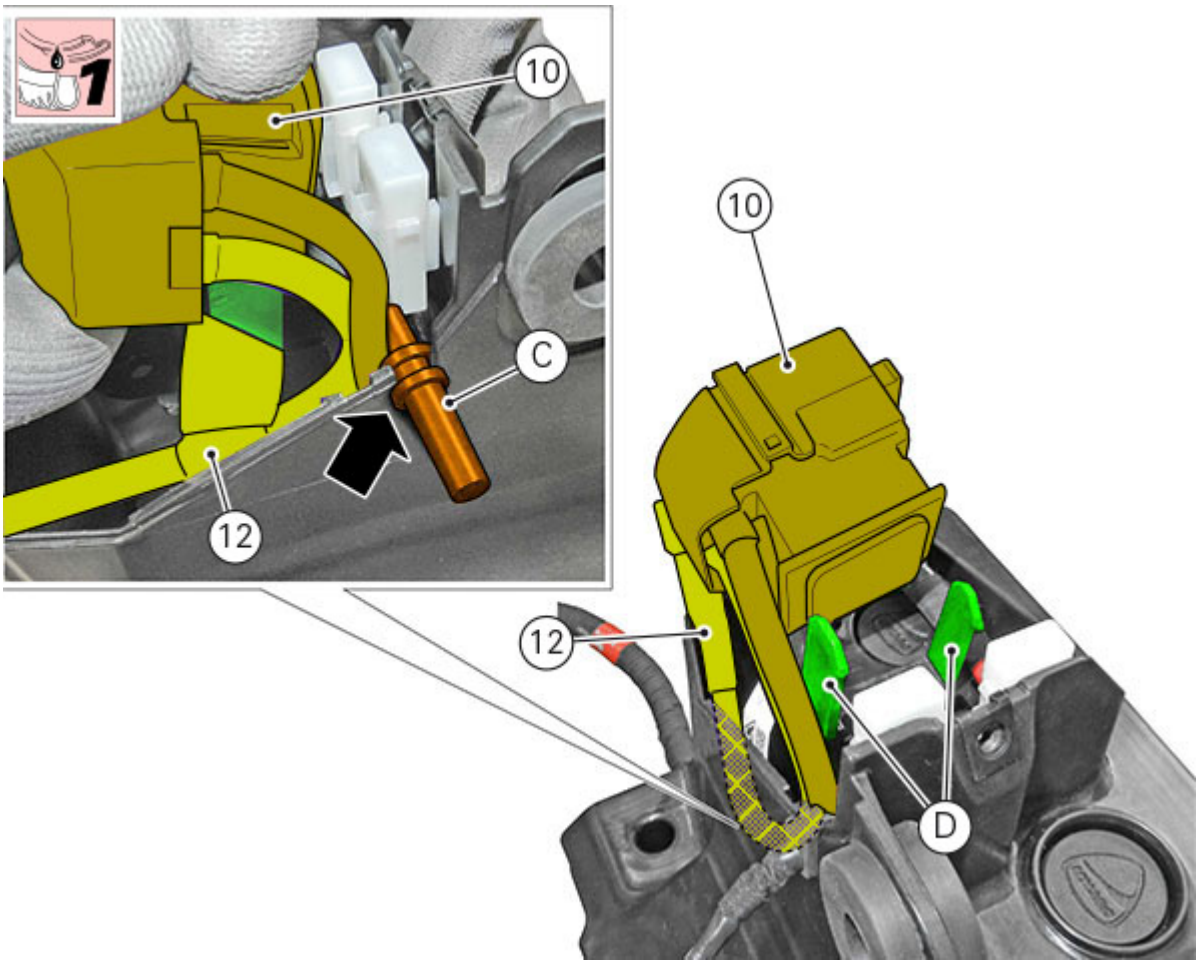

Continue the electrical system re-routing and connection procedure, as indicated.

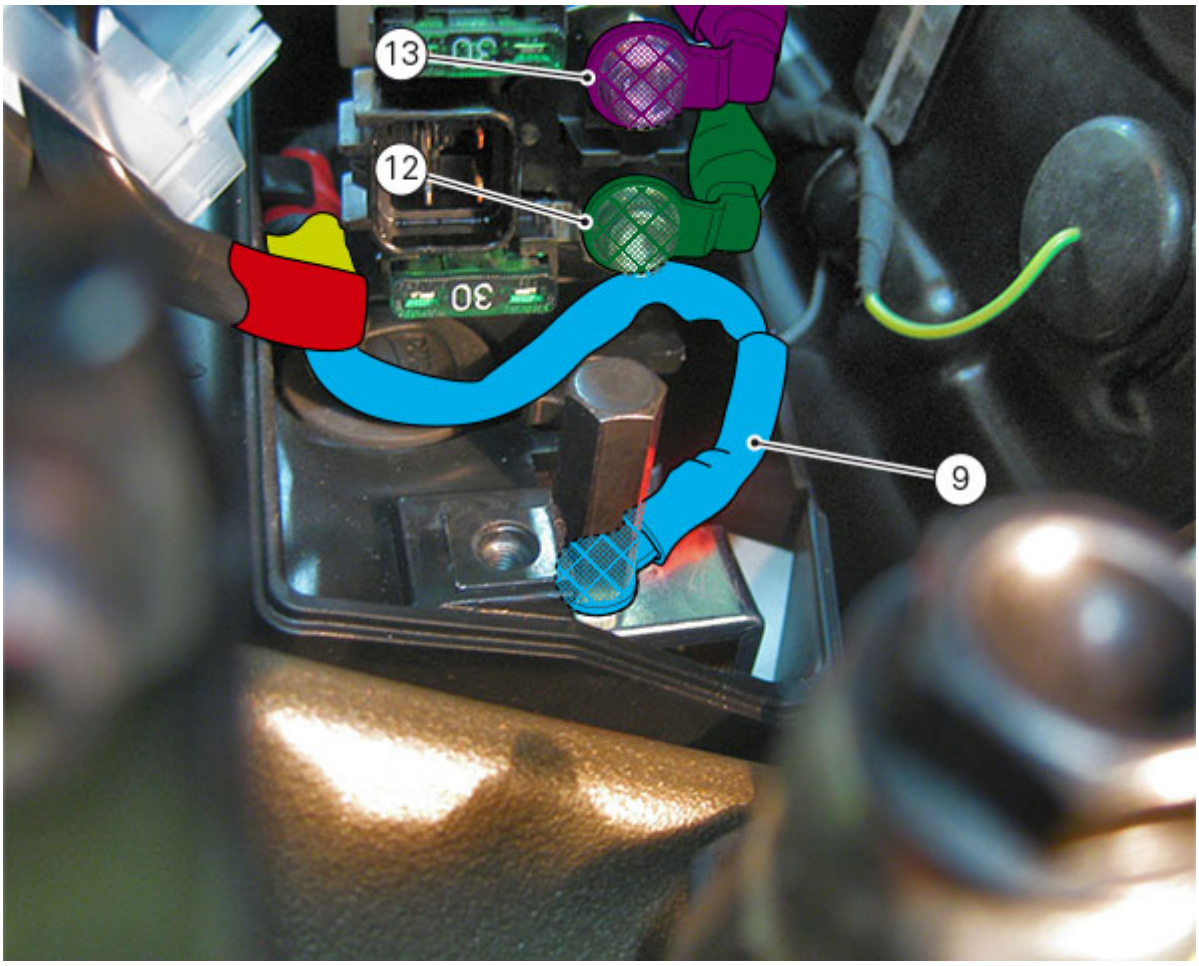

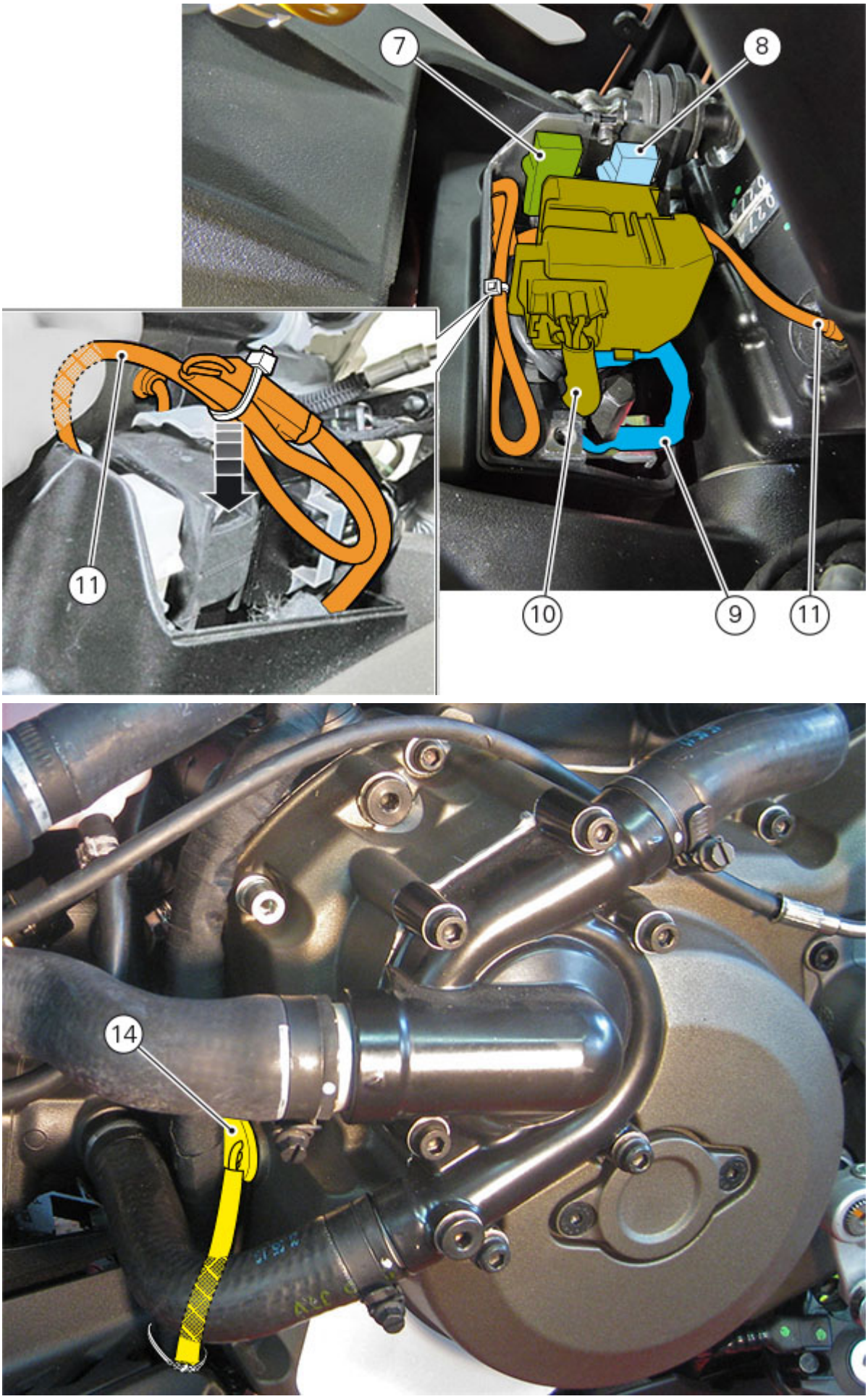

Tie battery negative cable (15), solenoid starter/starter motor cable (13) and main wiring (E) to the electrical components compartment using the indicated ties.

Note

Once the operation is completed, battery cable must be free to move and does not have to cross other cables.

Tie exhaust valve motor cable (6) with the relevant tie.

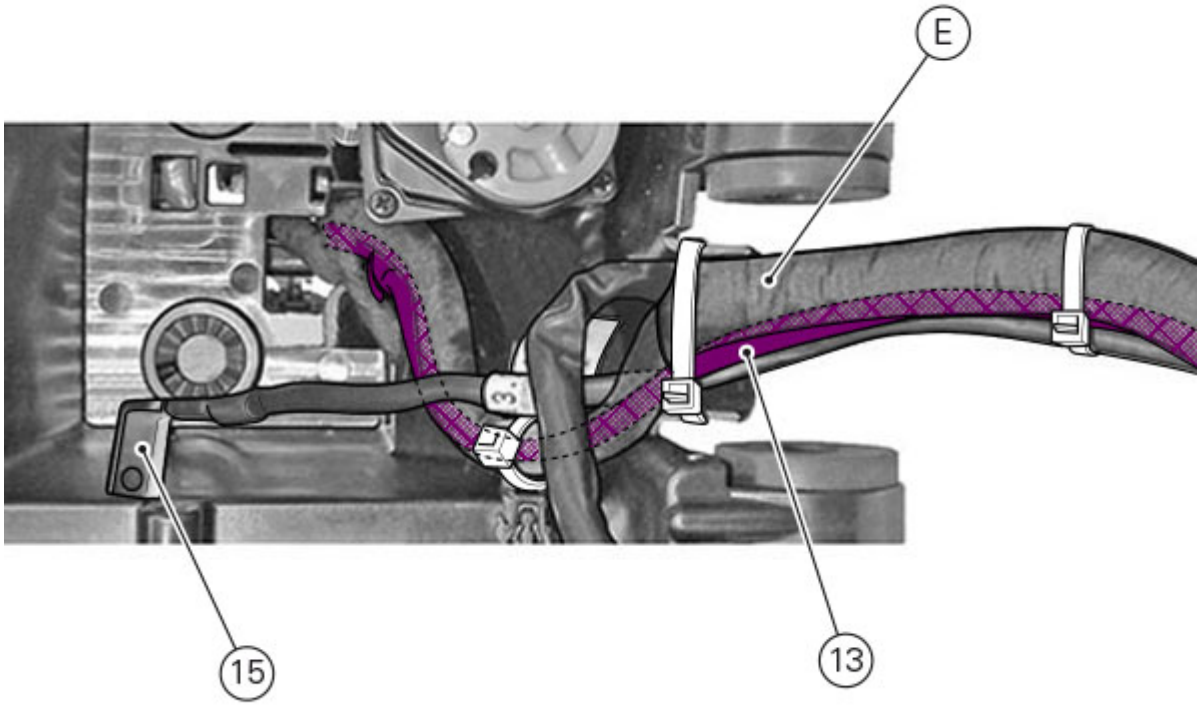

Upon lower cover reassembly, take special care to voltage rectifier (5) and exhaust valve wiring (6) passage.

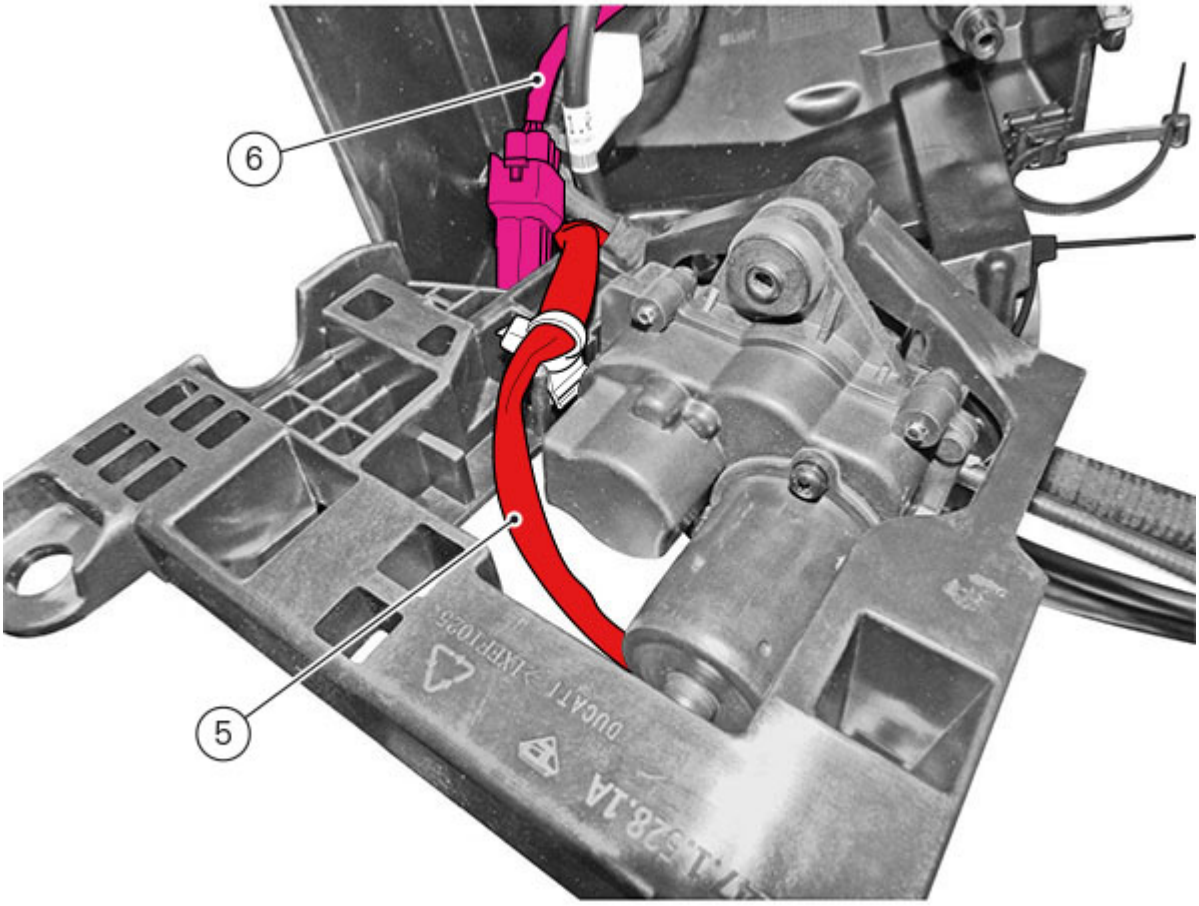

Continue wiring routing.

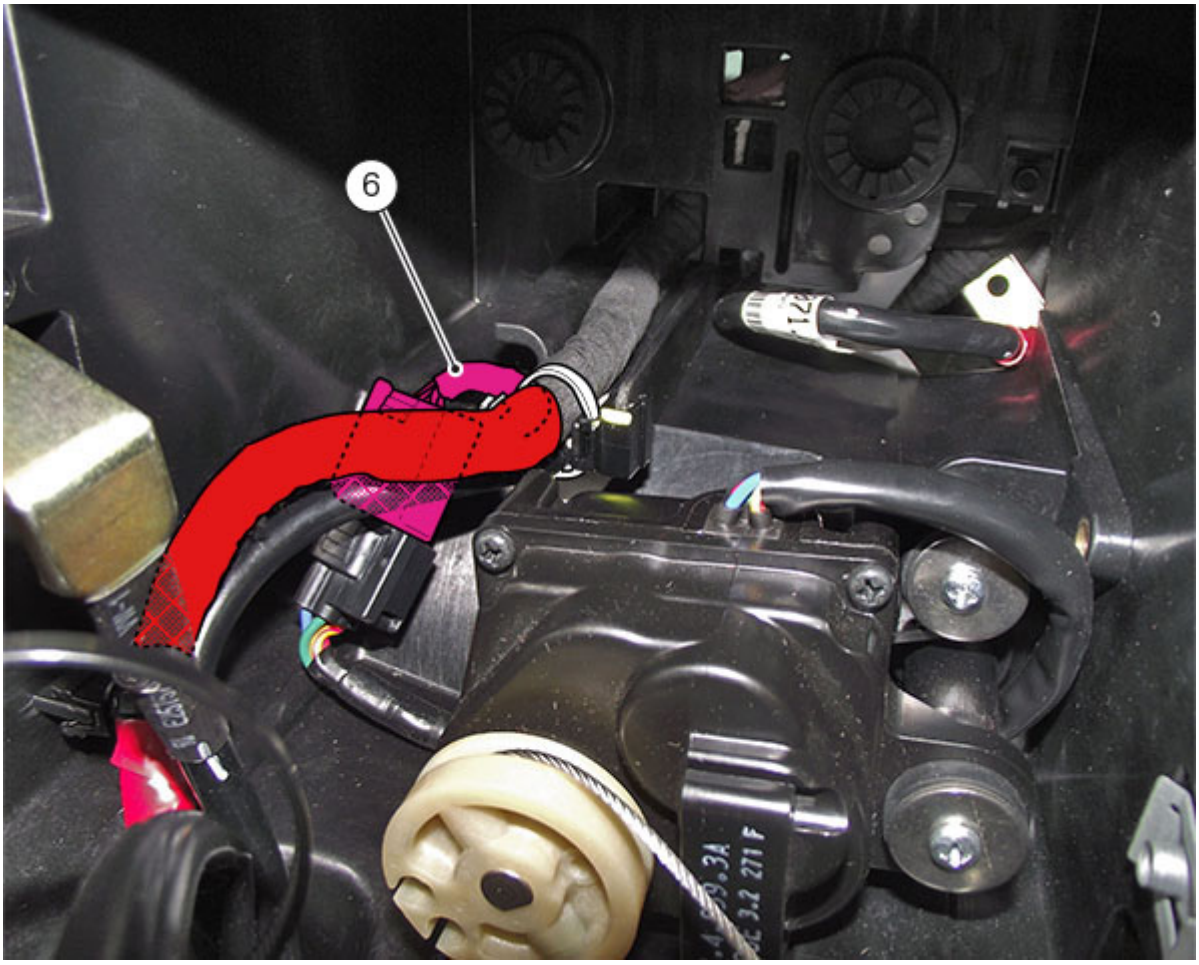

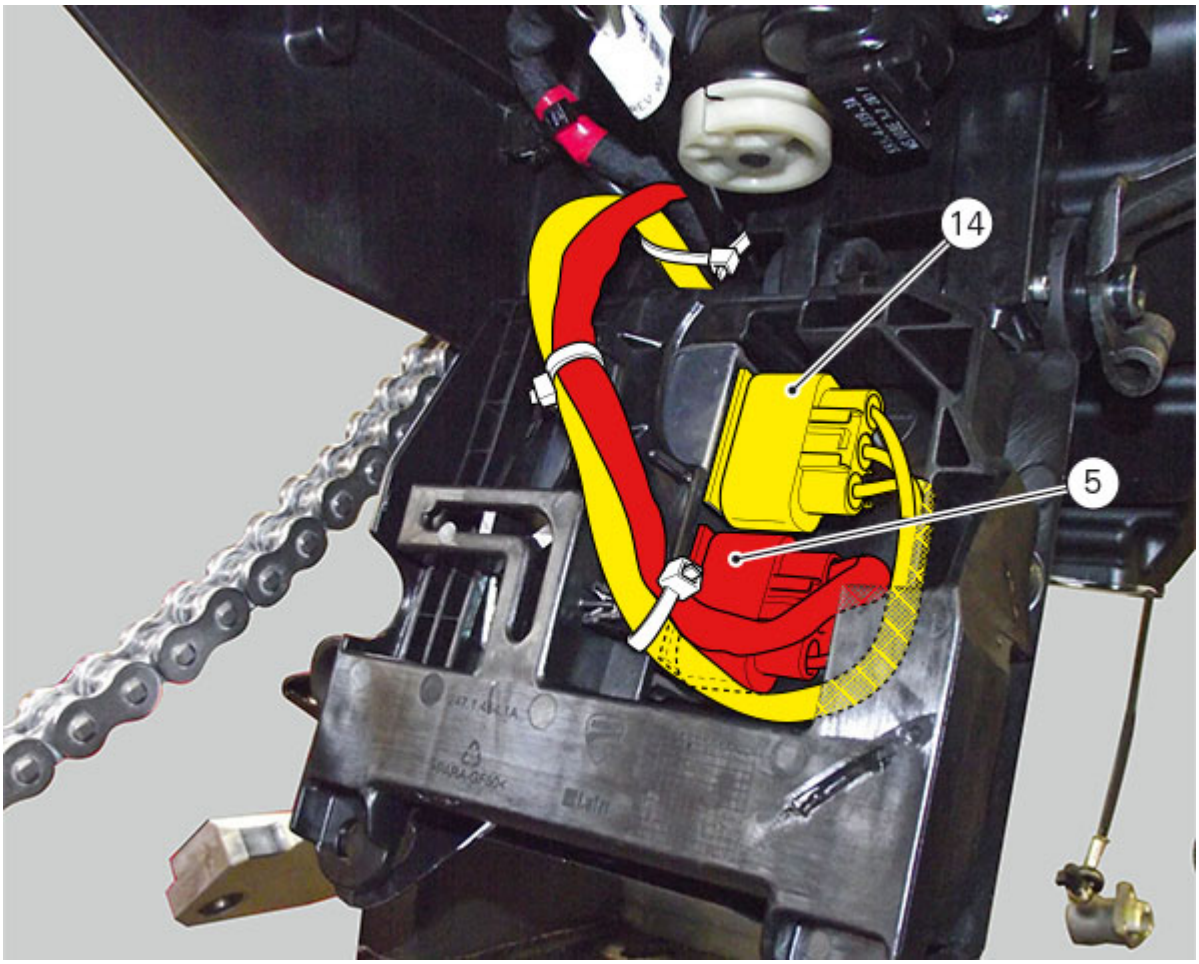

Tie main branch (F), solenoid starter/starter motor cable (13), regulator/generator cable (14) and battery negative cable (G) to the electrical components compartment, as indicated.

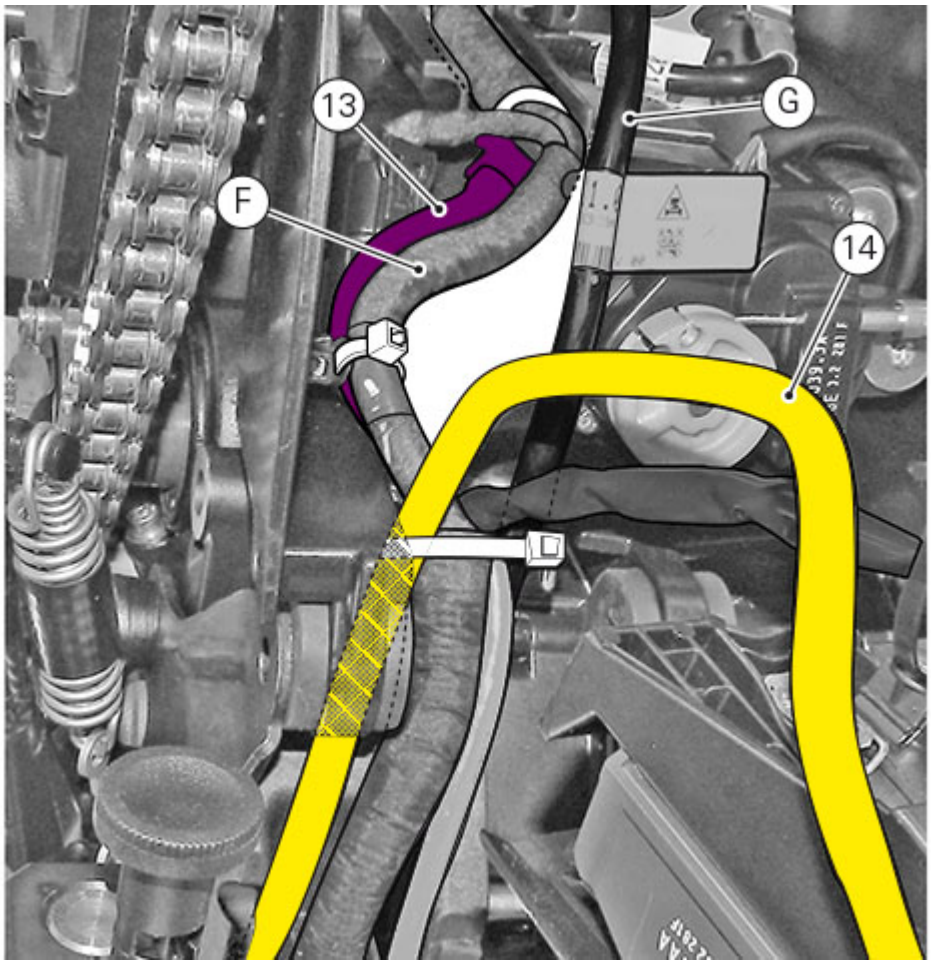

Tie the wirings as indicated.

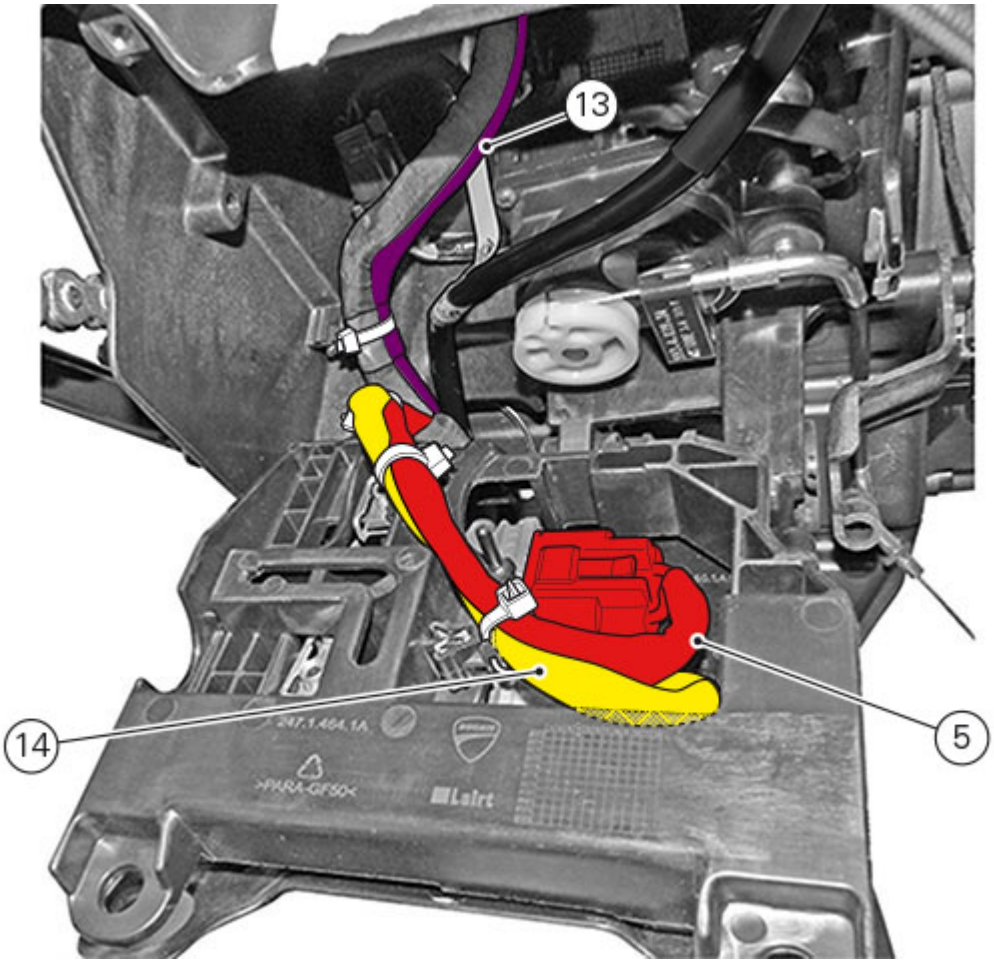

General key and "Routing wiring on frame".

Branch 9

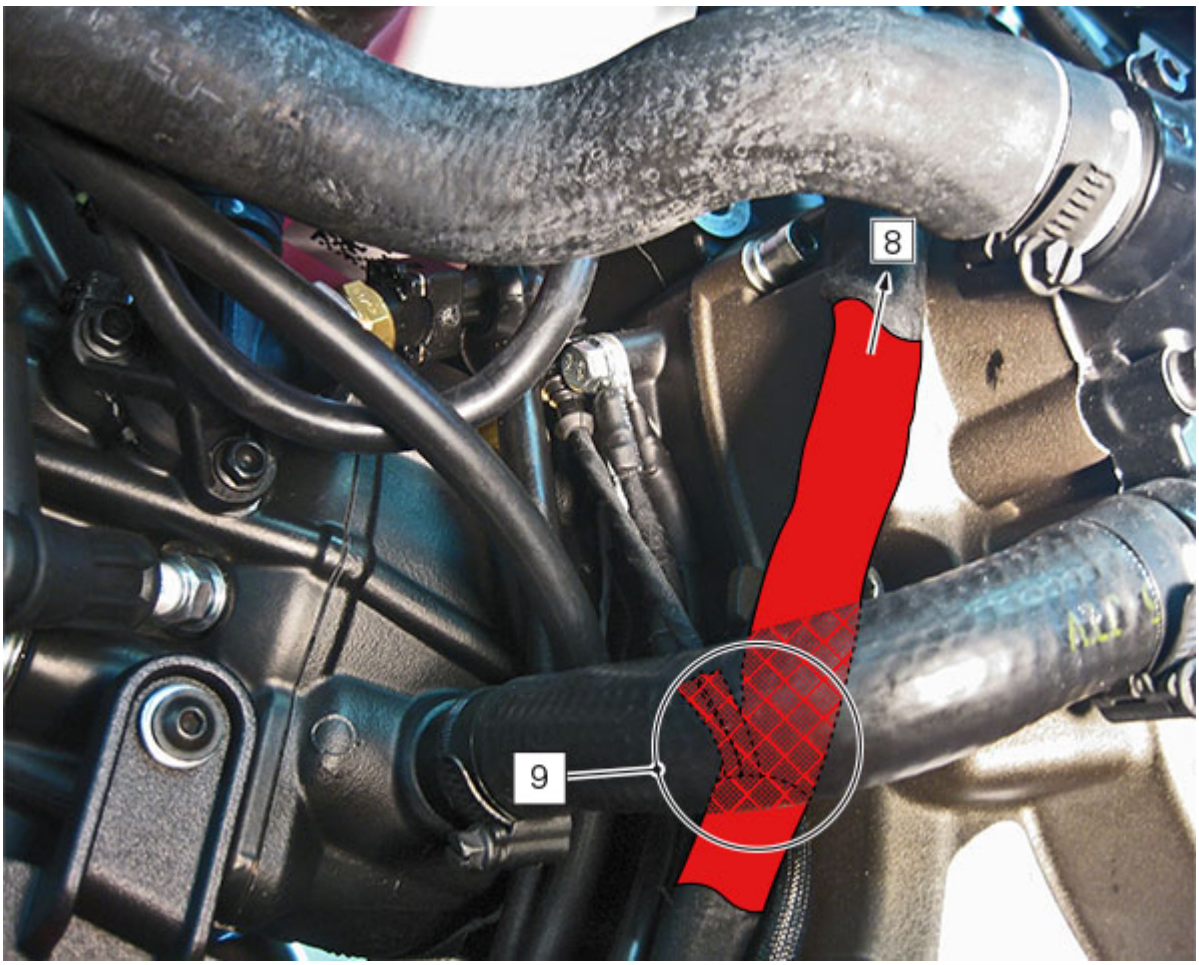

Table 9A

Pos.	DESCRIPTION
1	Ground
2	Ground - battery negative cable
3	Water temperature sensor

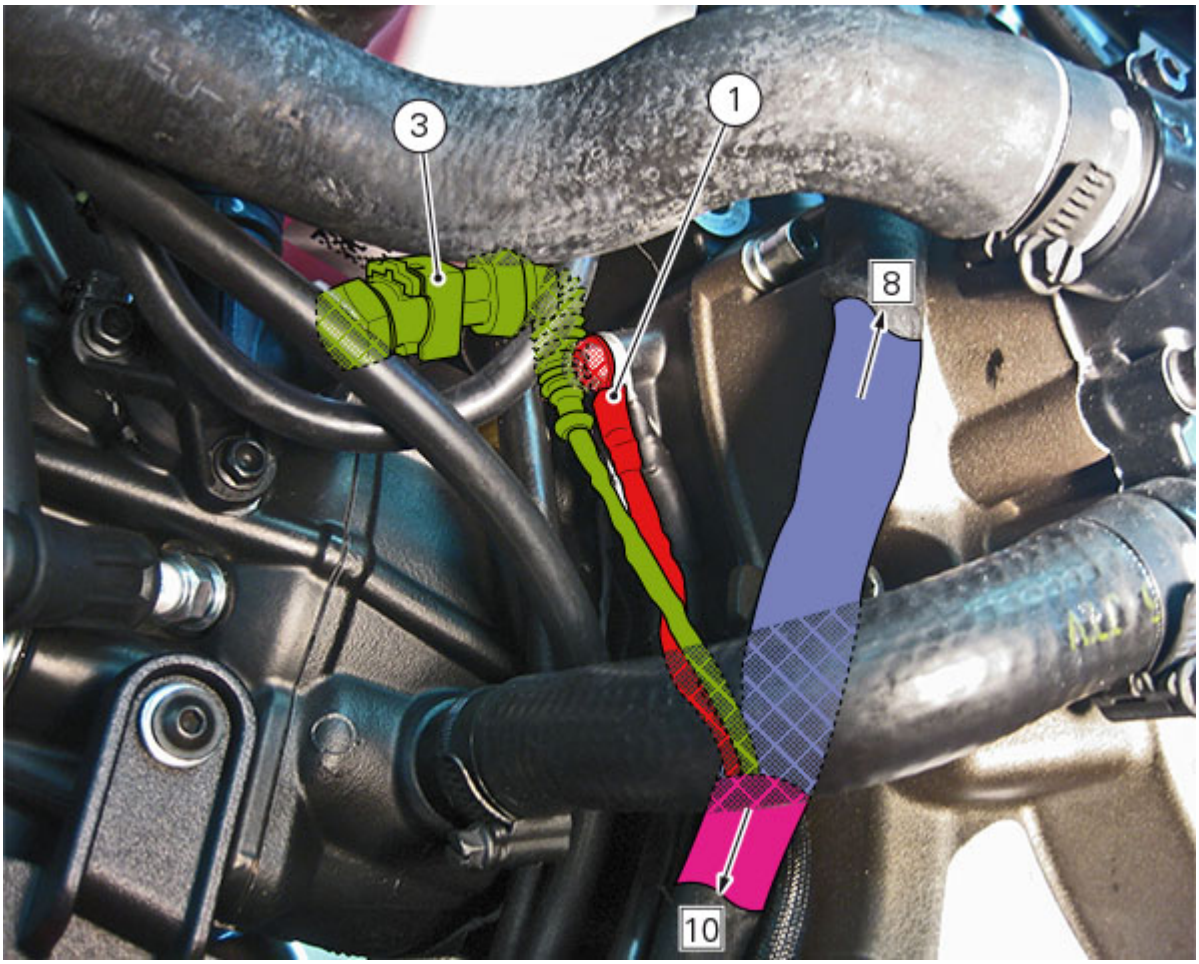
3
1
8
10

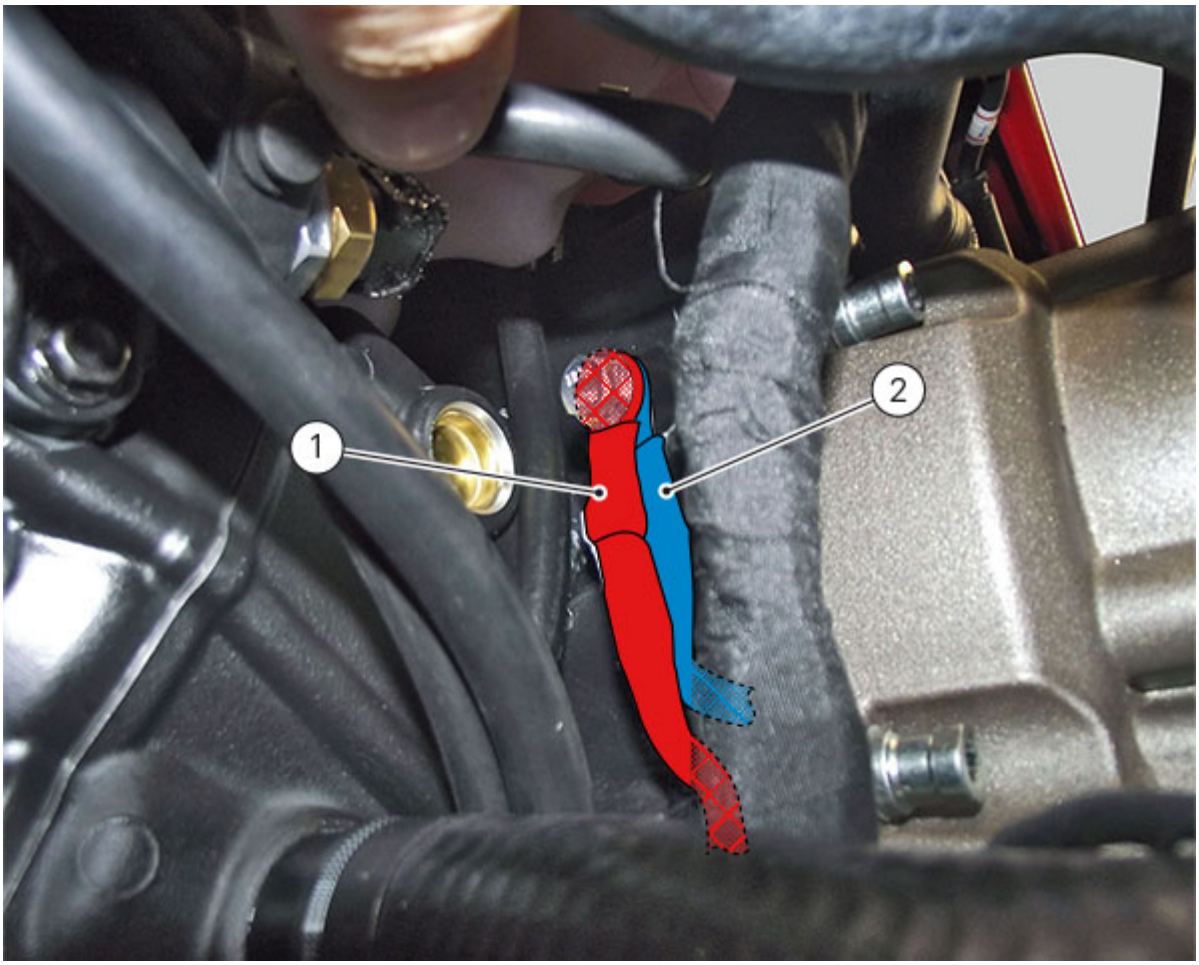
1
2

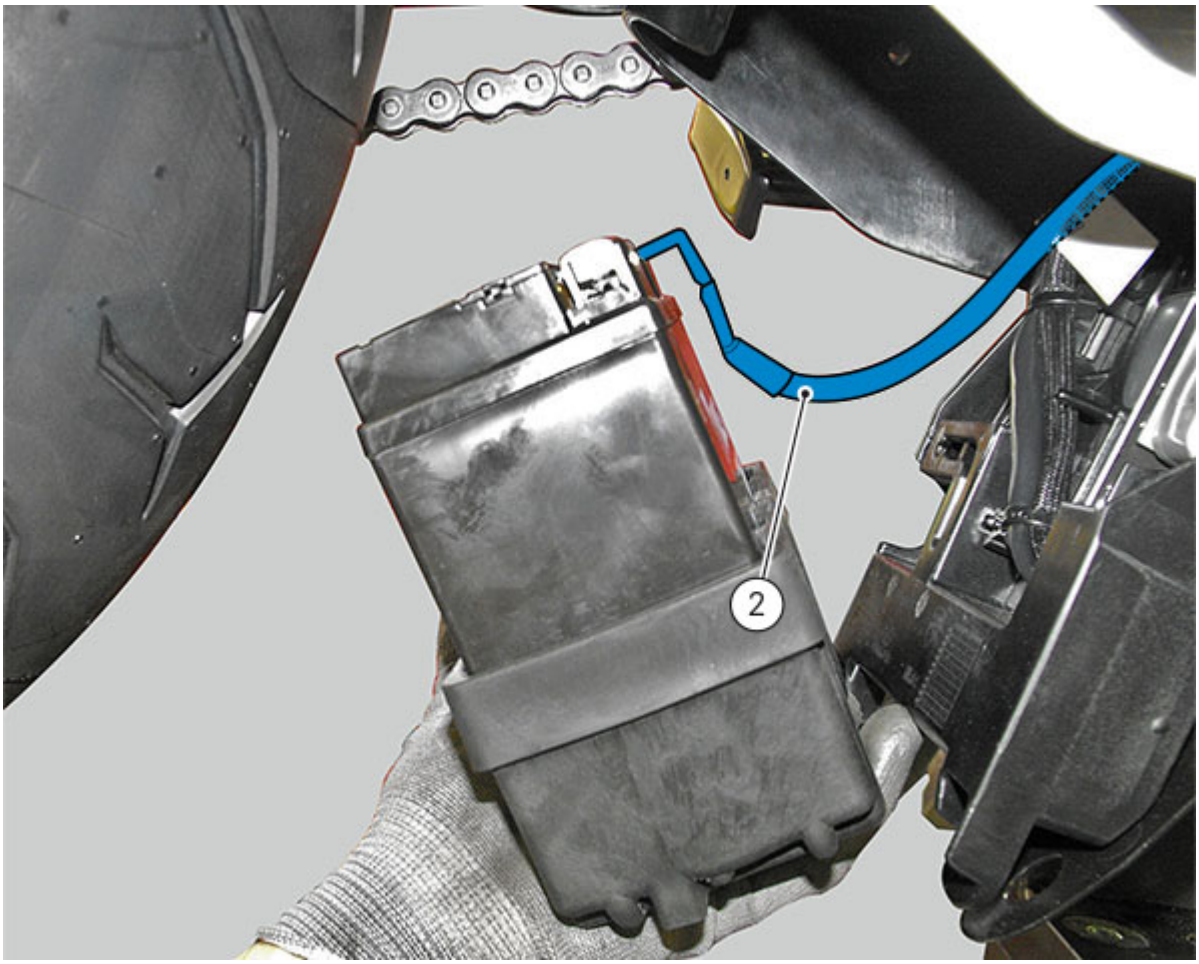

General key and "Routing wiring on frame".

Branch 8

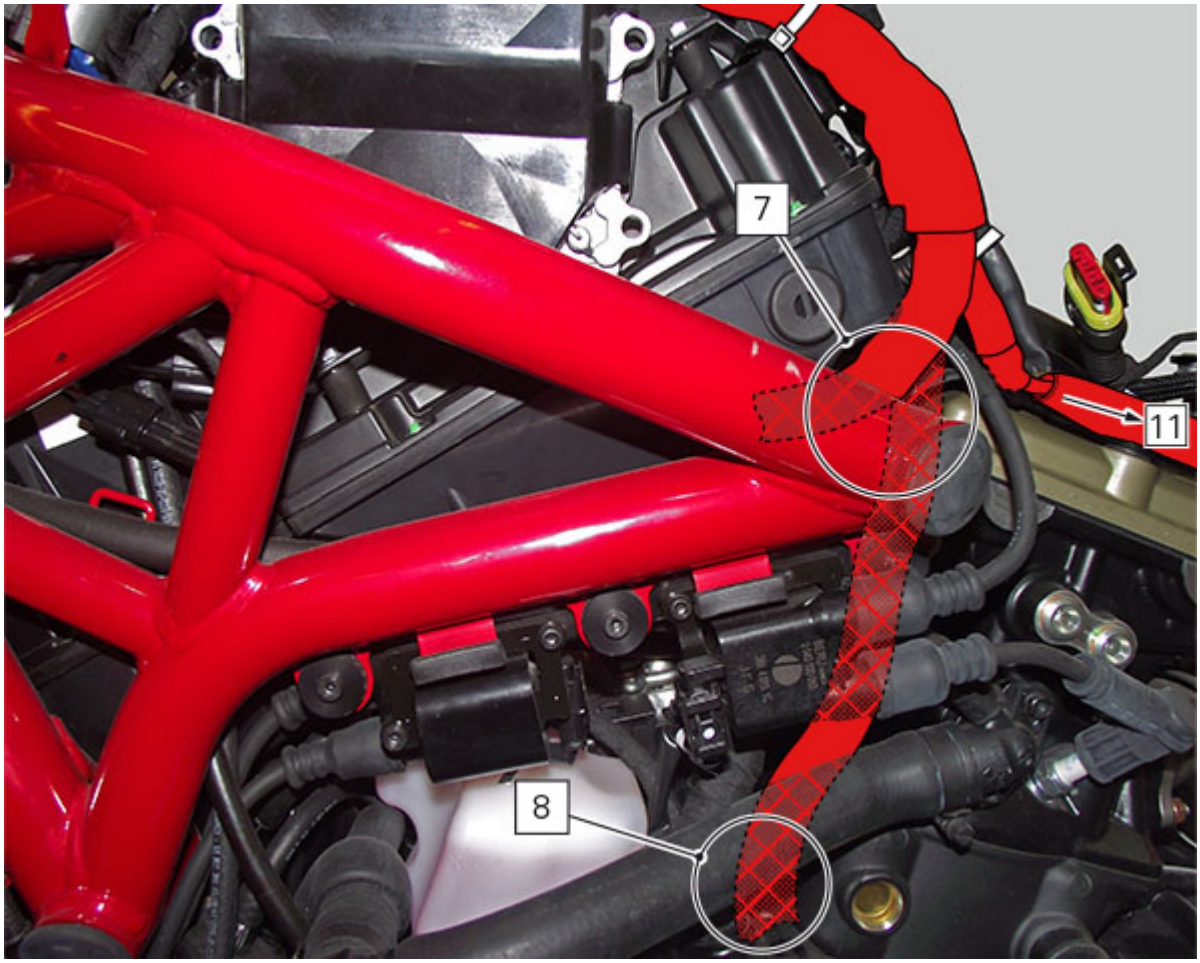

Table 8A

Pos.	DESCRIPTION
1	Purge valve connection cable
2	Rpm (pick-up) sensor connection cable
3	Horizontal head coil connection cable
4	Vertical coil connection cable

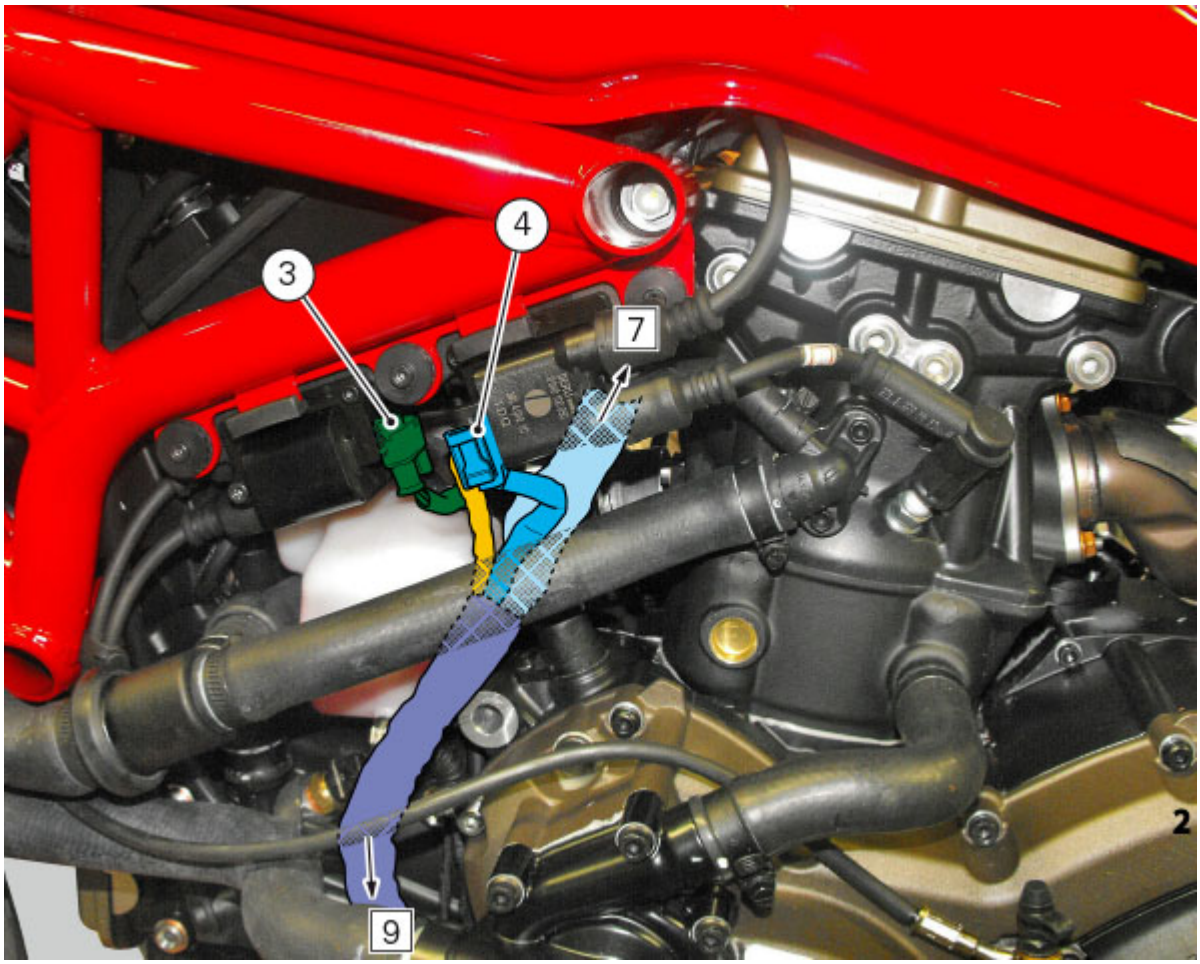

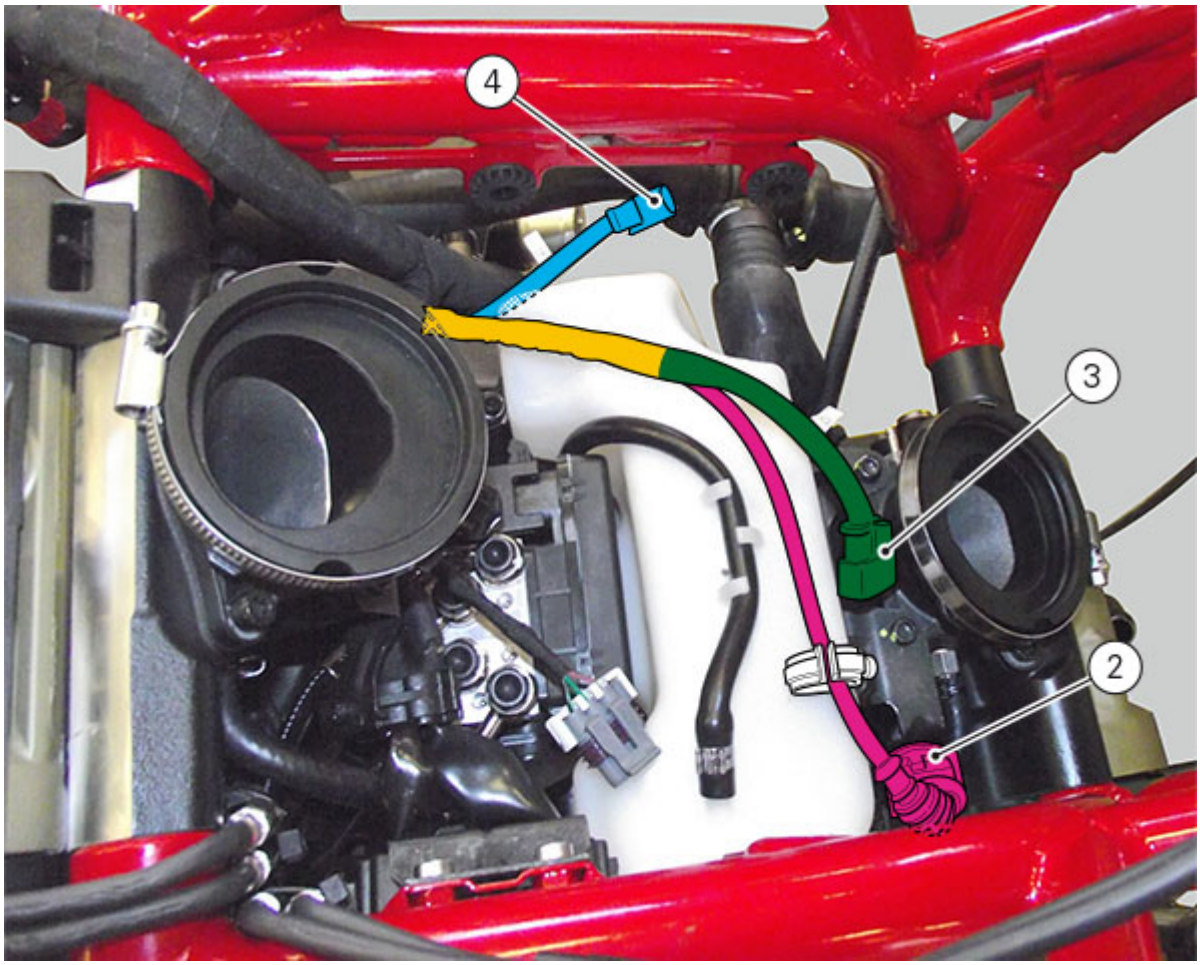

Tie the rpm sensor cable (pick-up) to the expansion reservoir.
Aim tie with the closing part facing the expansion reservoir.

Warning

Rpm (pick-up) sensor cable must slide over canister pipes.

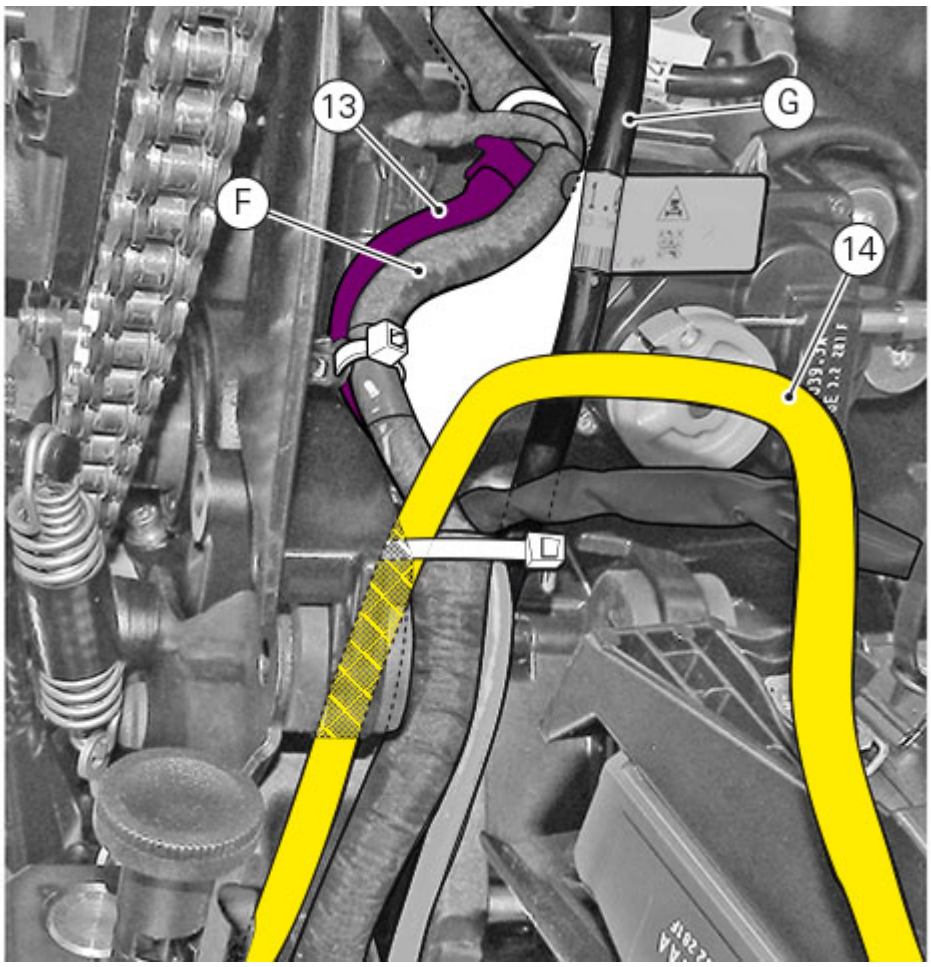

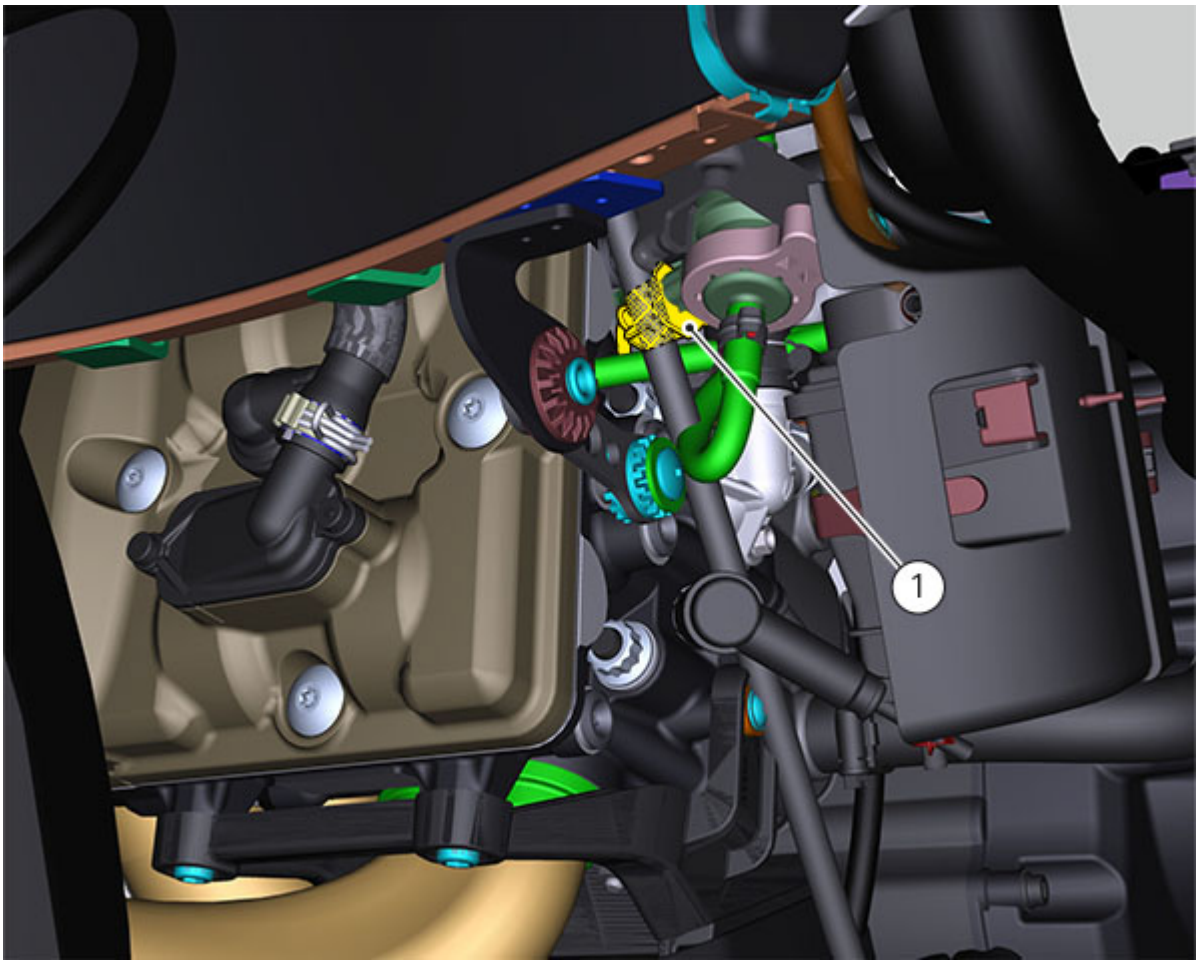

General key and "Routing wiring on frame".

Branch 7

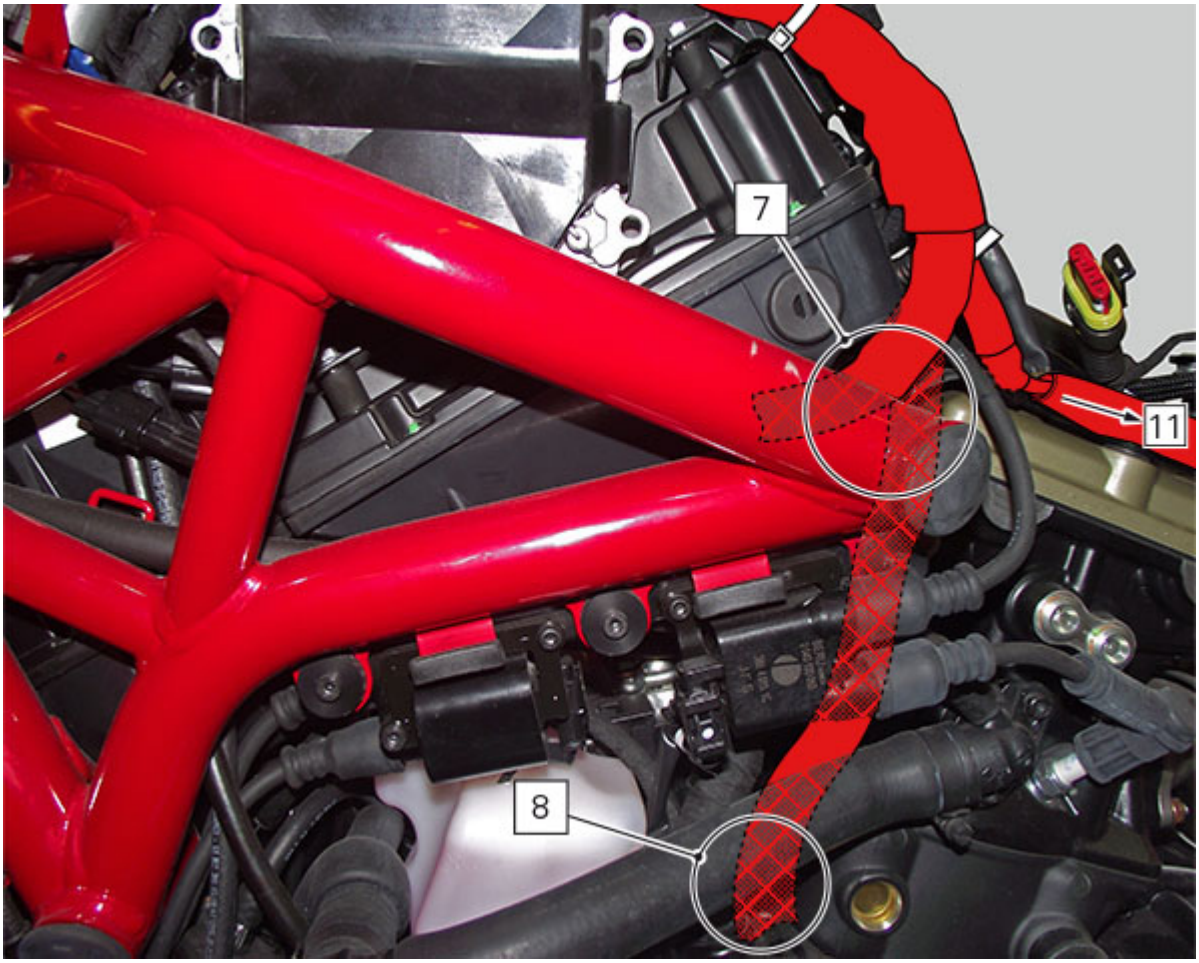

Table 7A

Pos.	DESCRIPTION
1	Front fuse box wiring
2	Front fuse box wiring
3	MAP sensor cable
4	ABS control unit connection wiring

Note
The front fuse box wiring has more wires than the rear fuse box wiring. Rear fuse box branch is shorter.

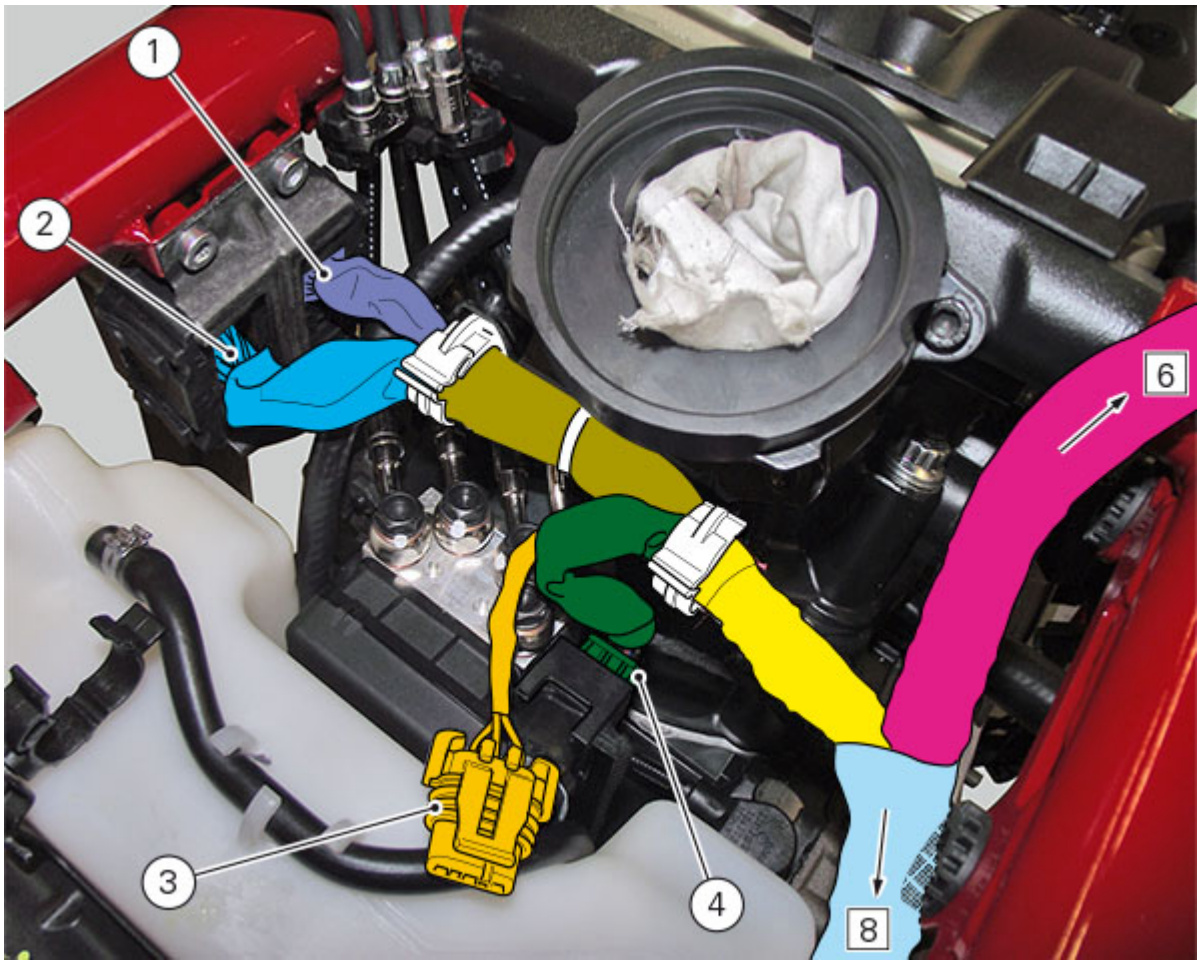
1
2
3
4
6
8

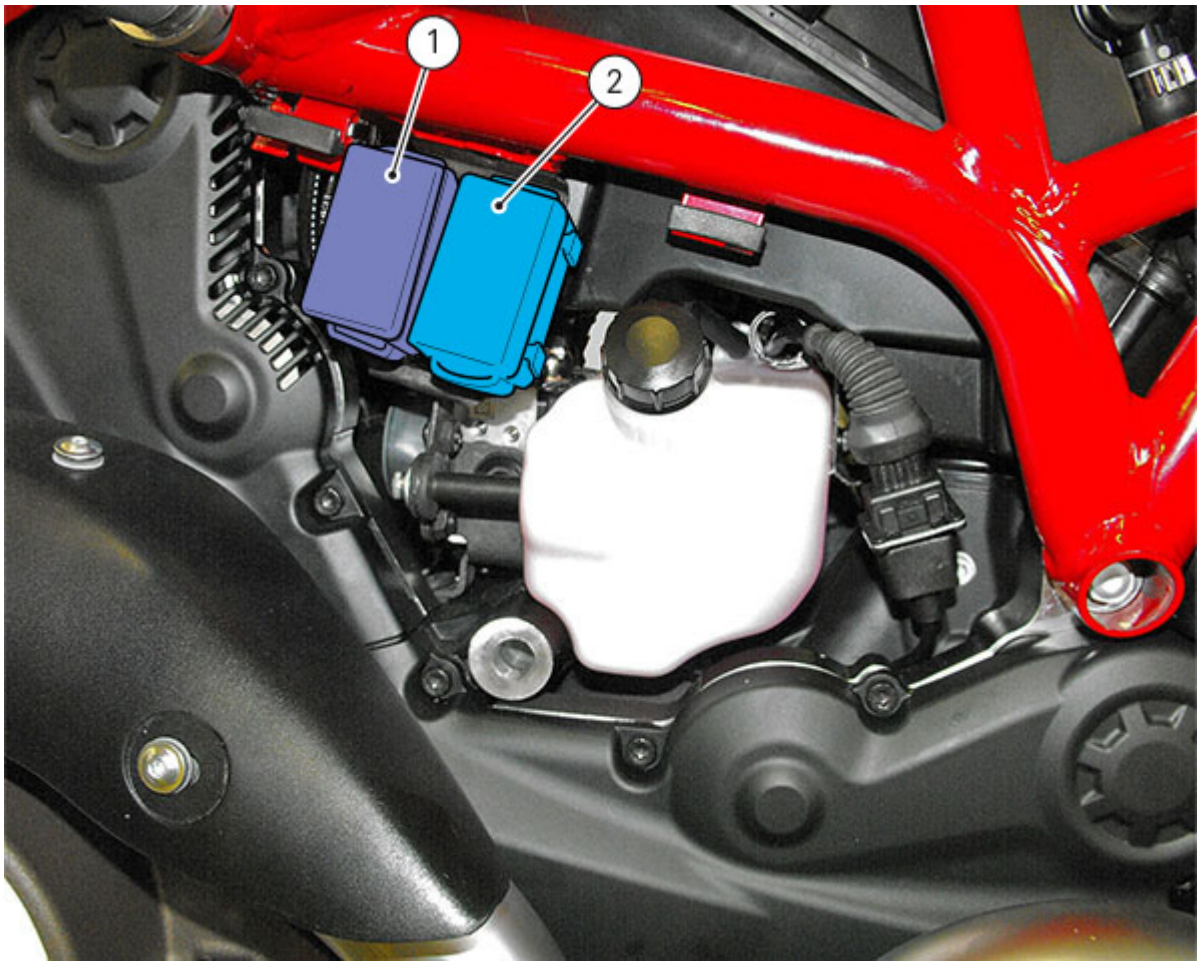
1
2

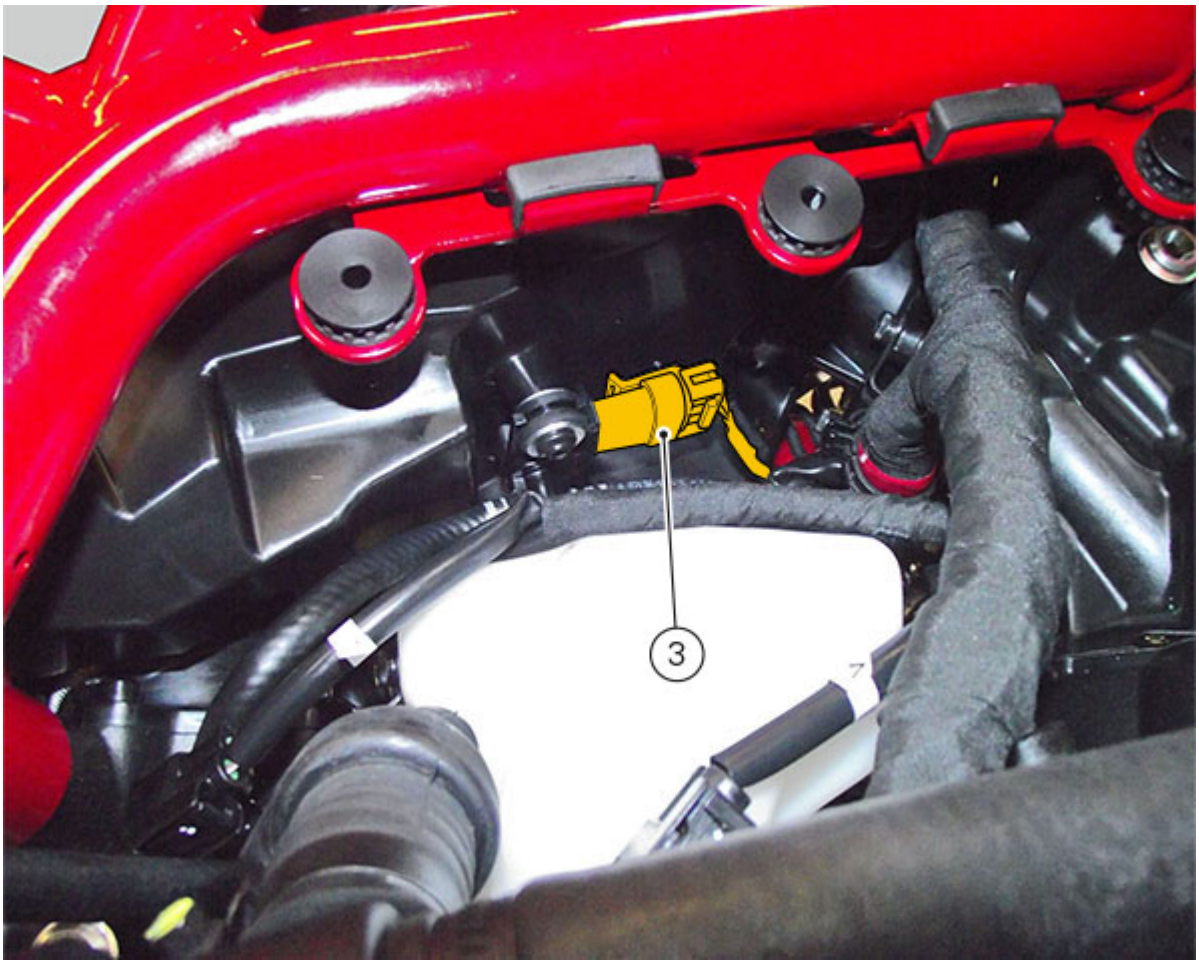

General key and "Routing wiring on frame".

Branch 6

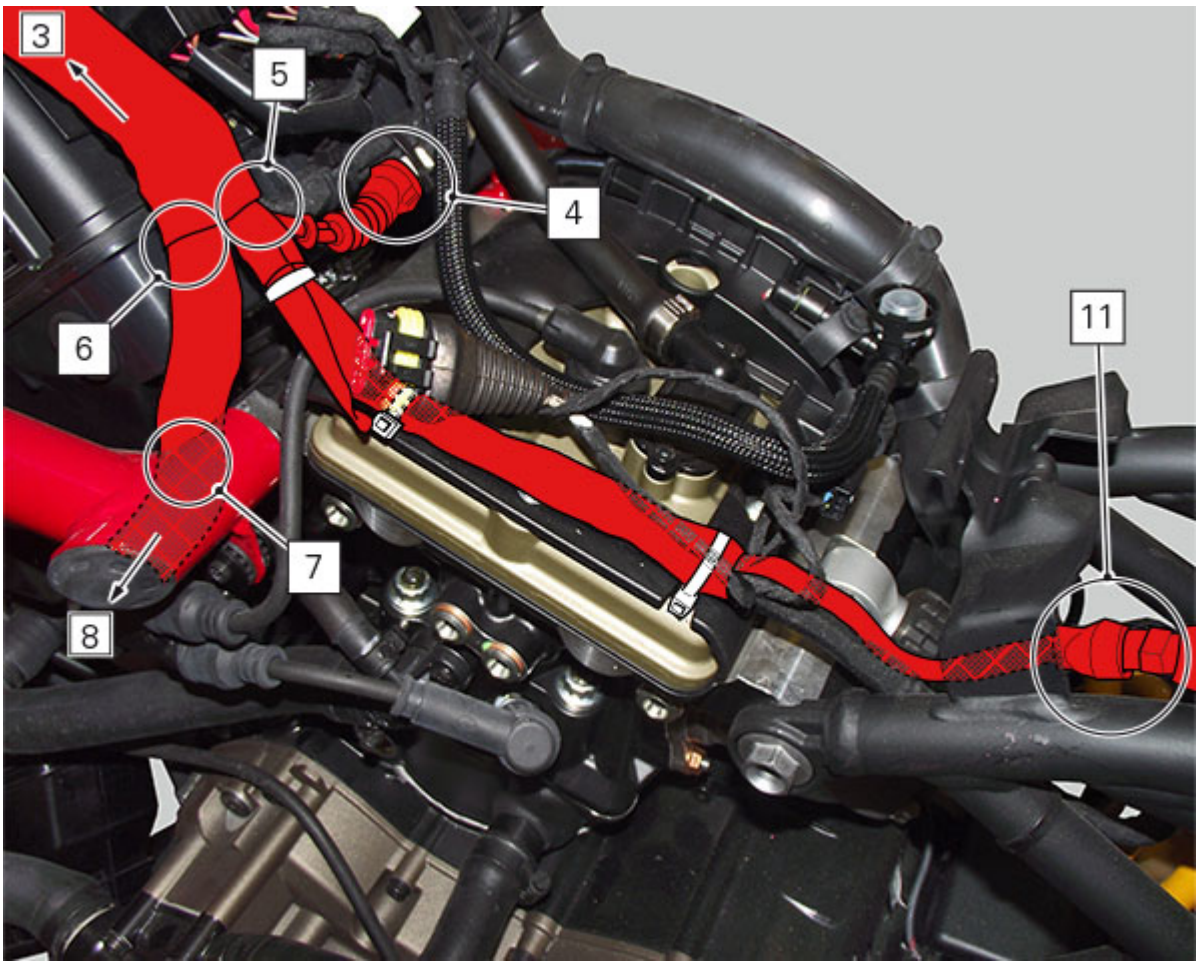

Table 6A

Pos.	DESCRIPTION
1	Anti-theft system cable

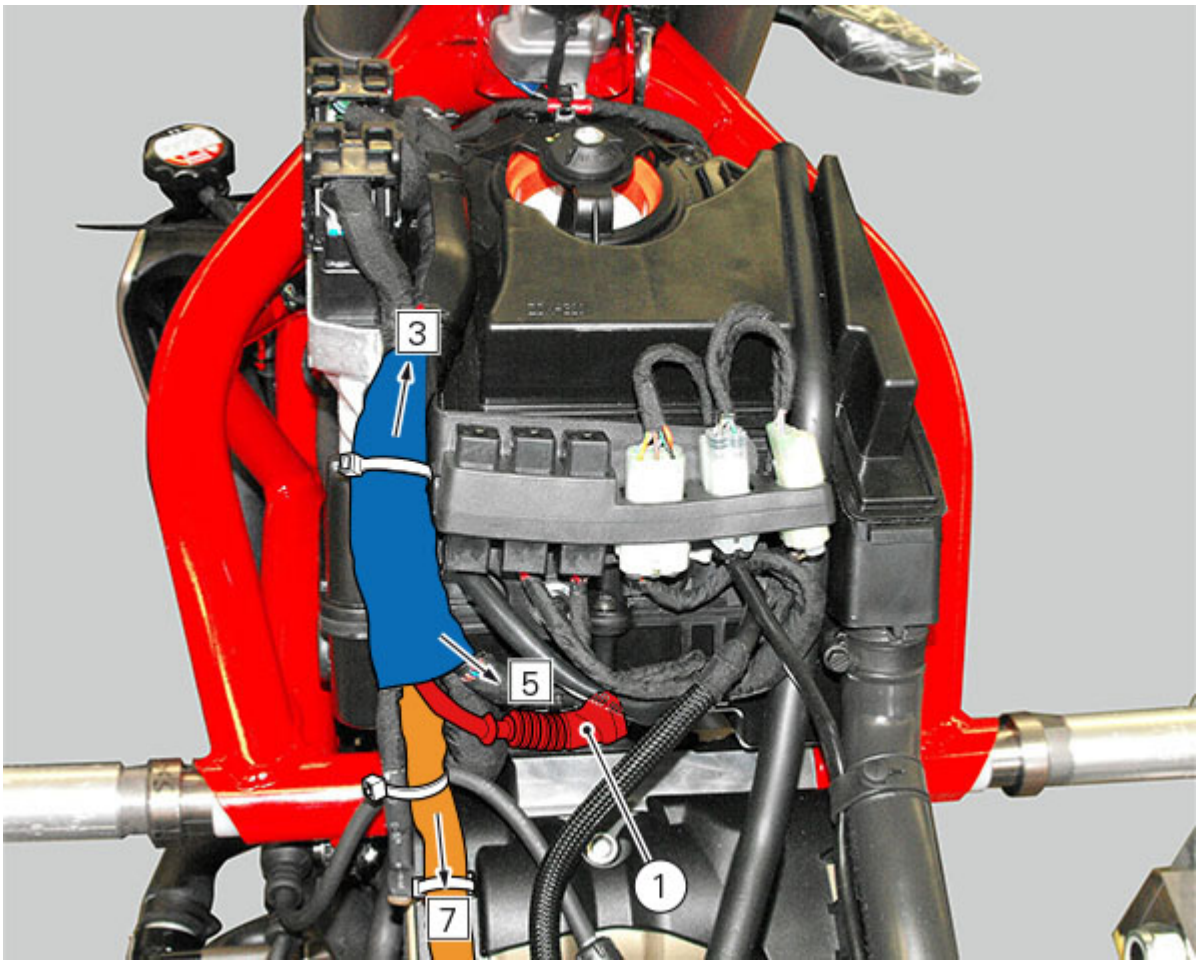

General key and "Routing wiring on frame".

Branch 5

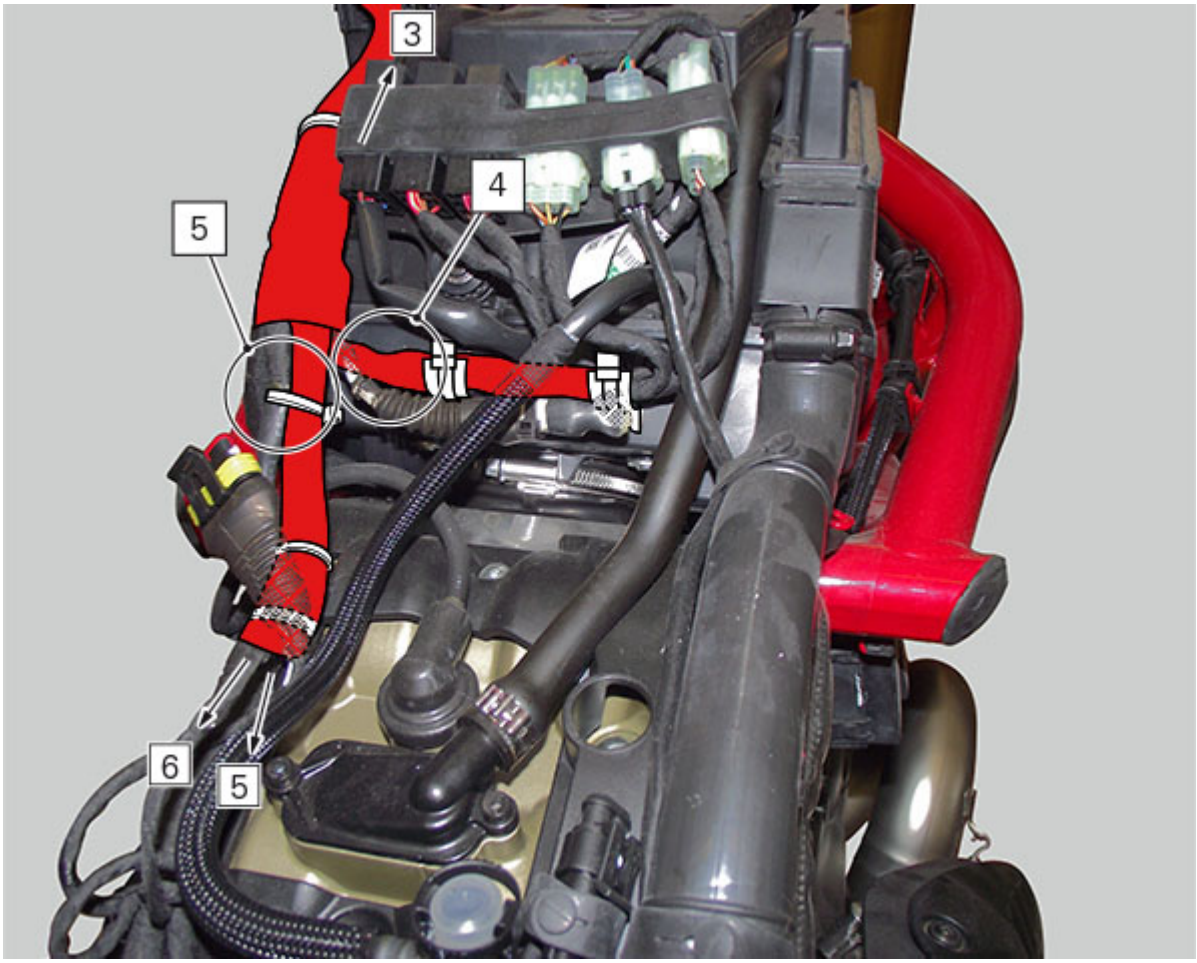

Table 5A

Pos.	DESCRIPTION
4	Rear speed sensor cable
5	Rear stop switch cable

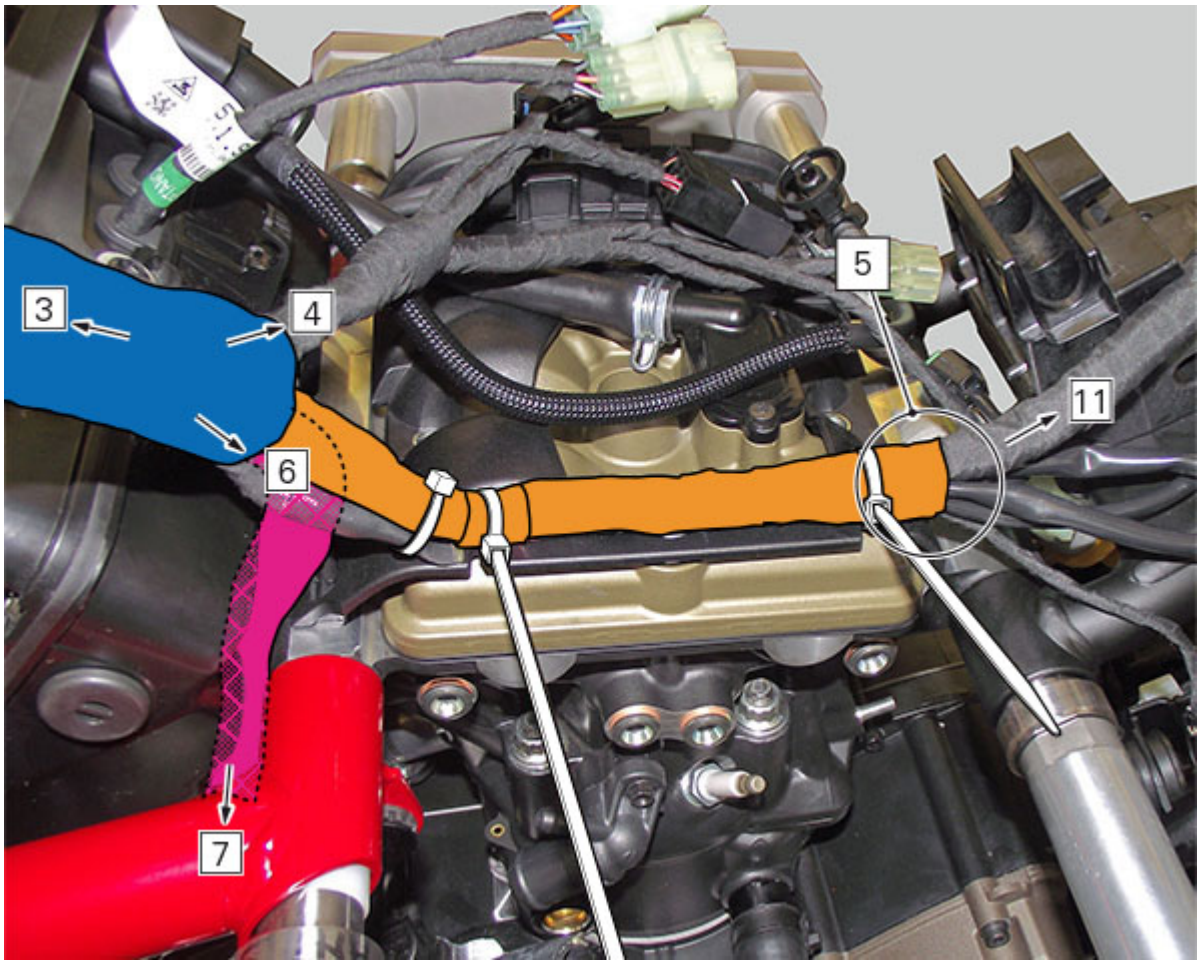
3
4
5
11
6
7

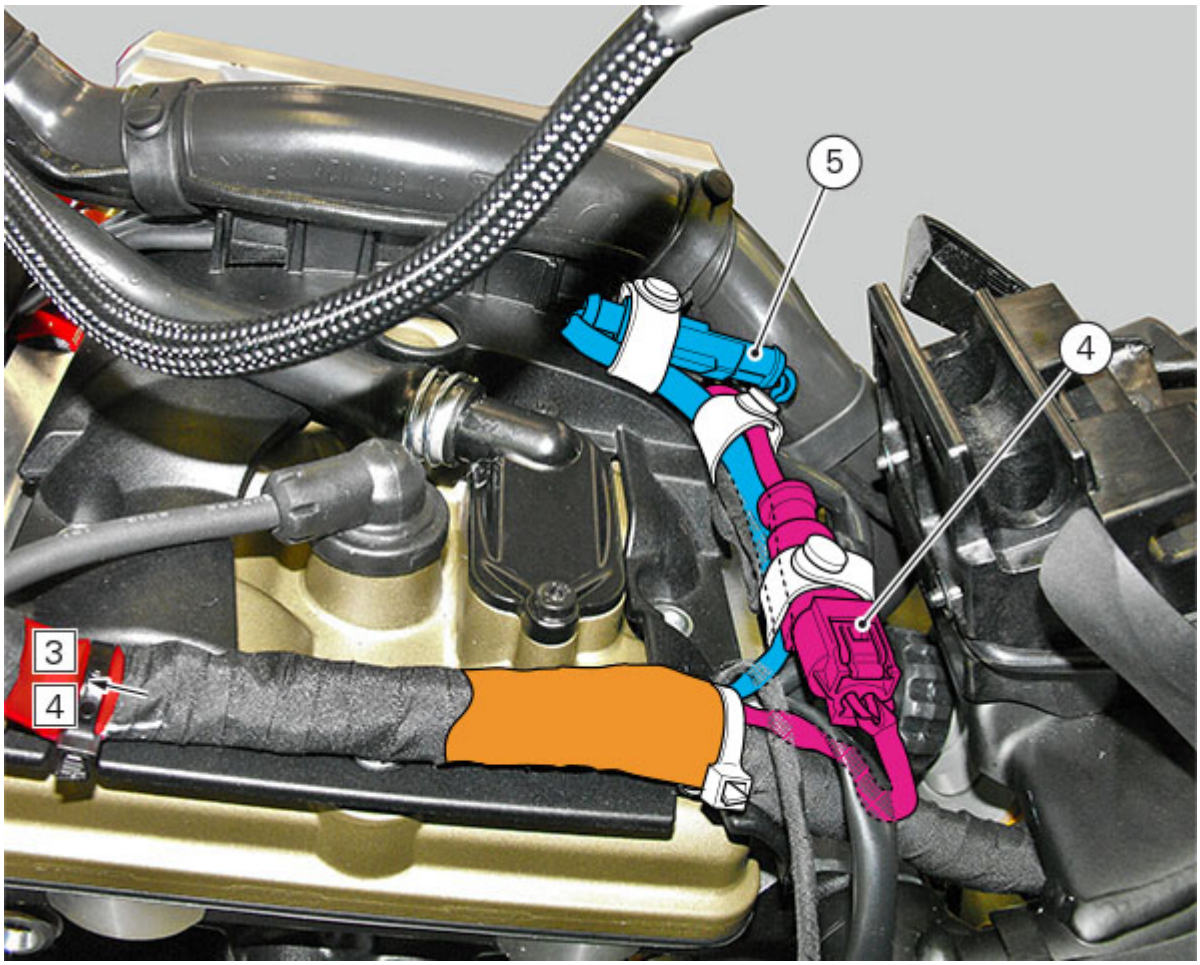
5
4
3
4

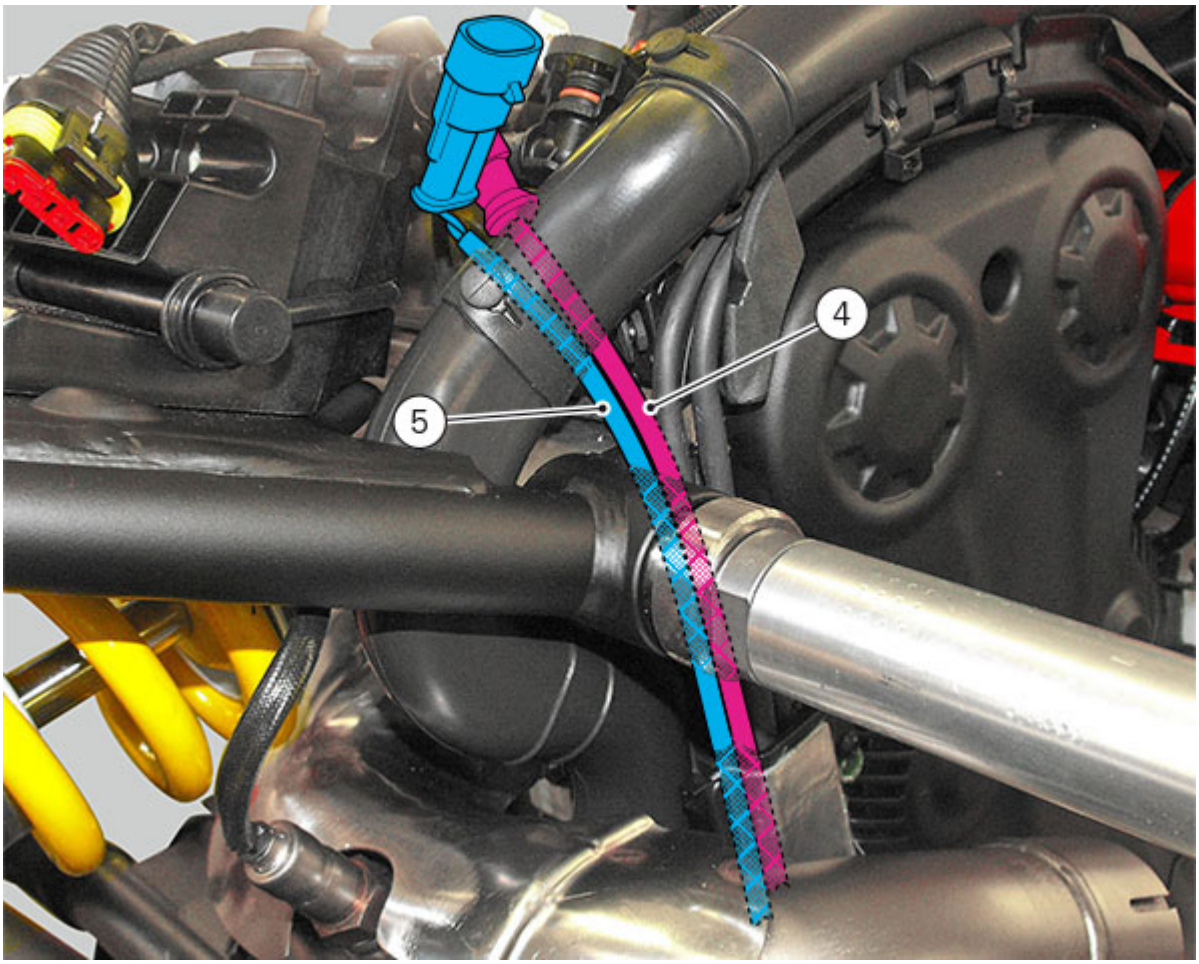
4
5

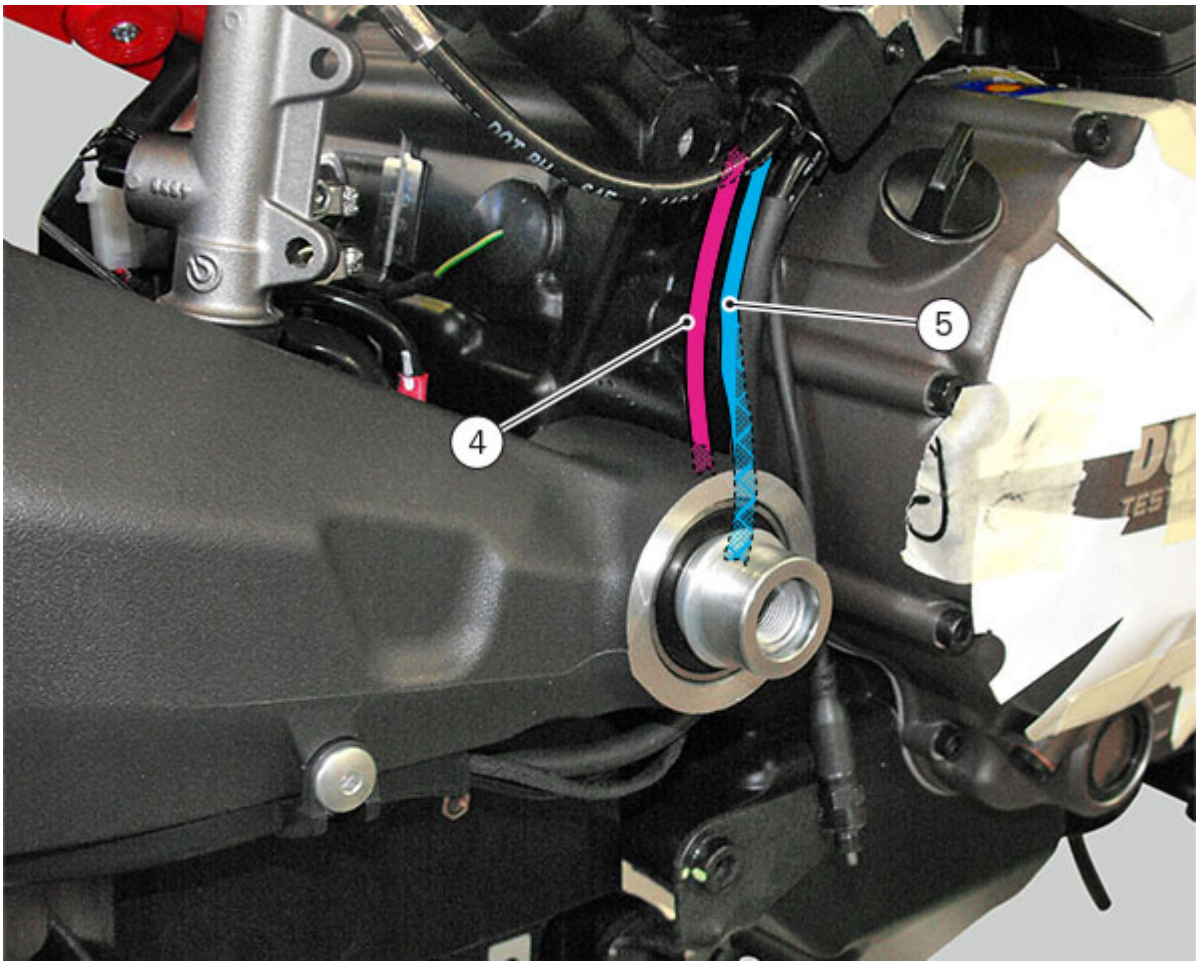
5
4

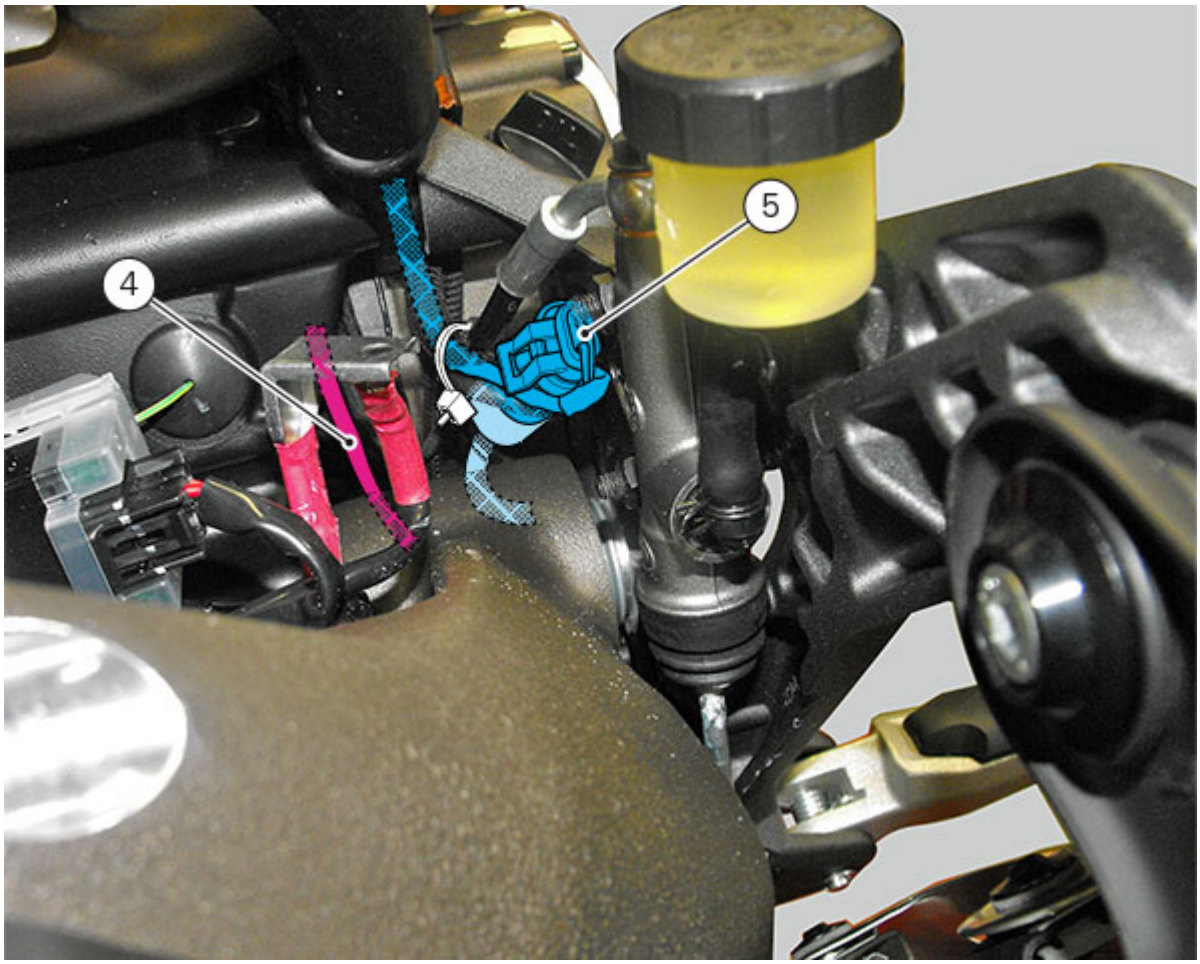
4
5

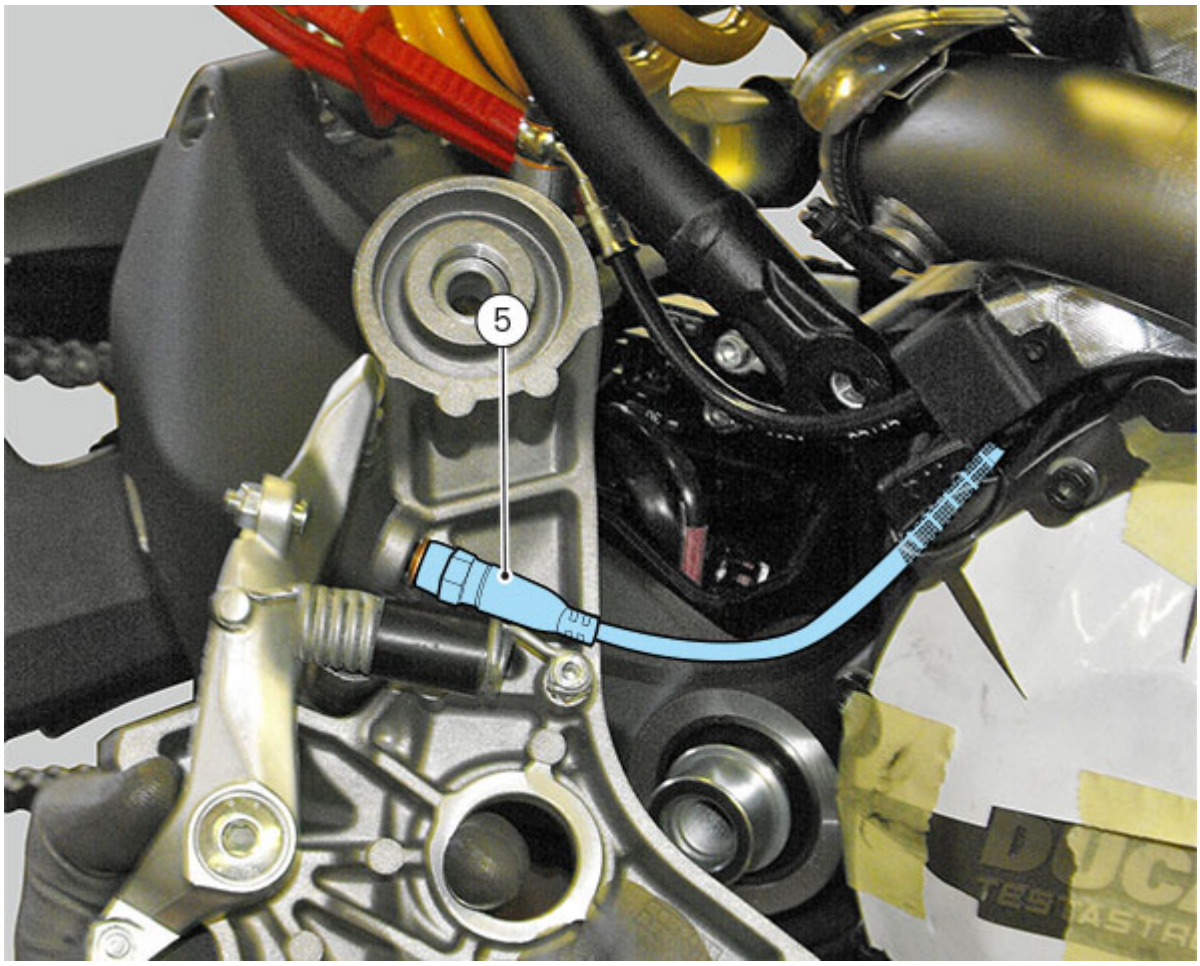
5

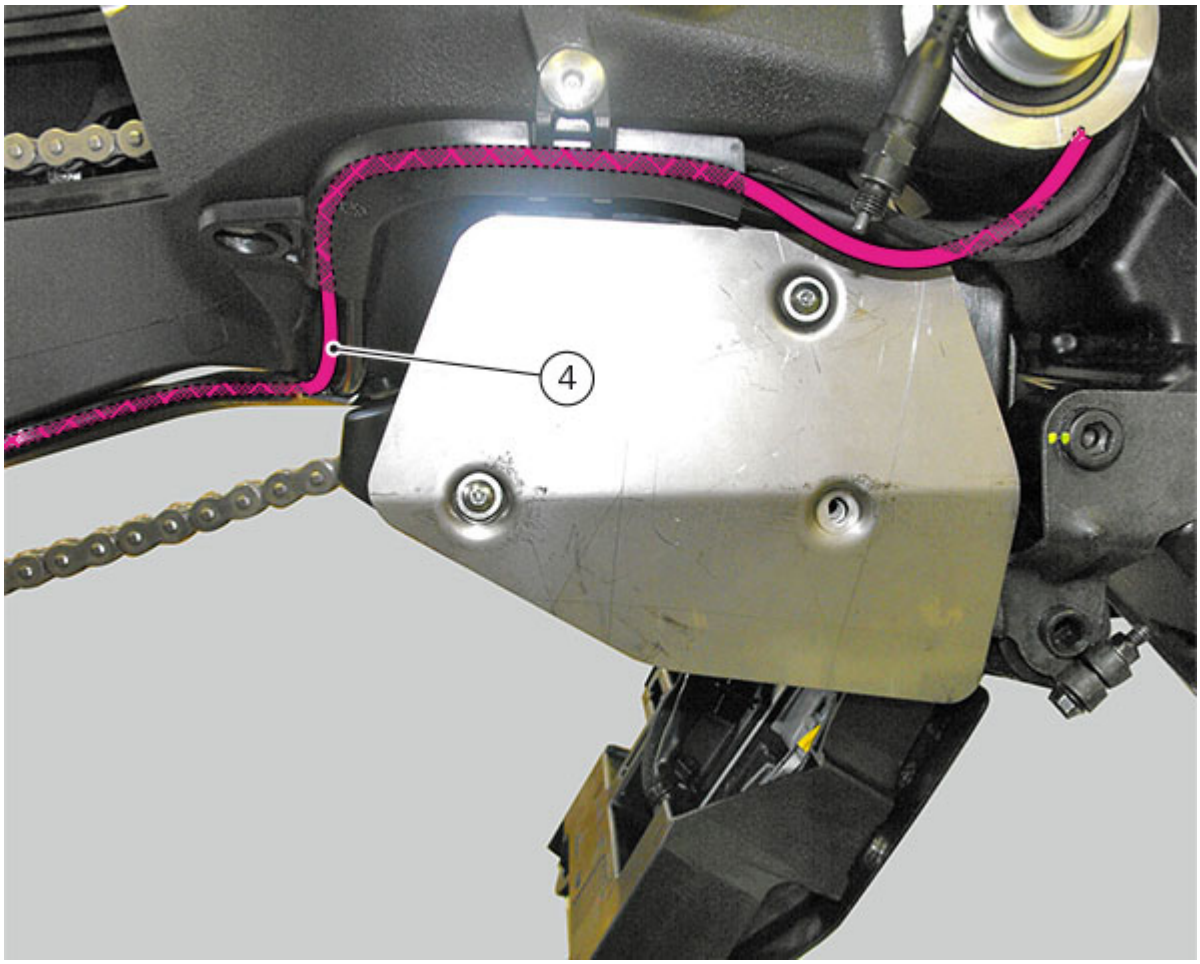

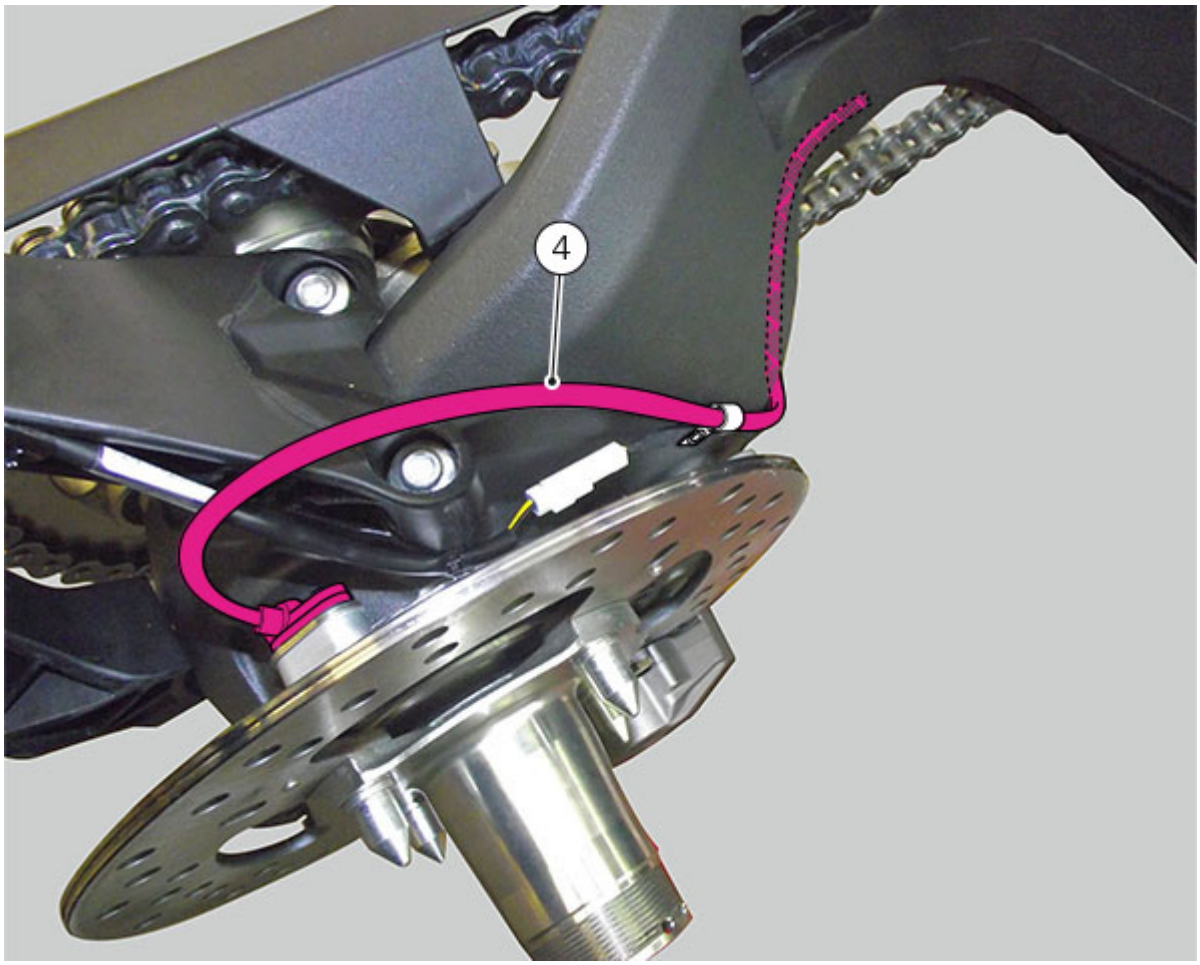

Table 5B

Pos.	DESCRIPTION
1	BBS wiring cable
2	Rear wiring (Branch 11)
3	Fuel pump cable
4	Rear speed sensor cable
5	Rear stop switch cable
6	Fuel tank ground

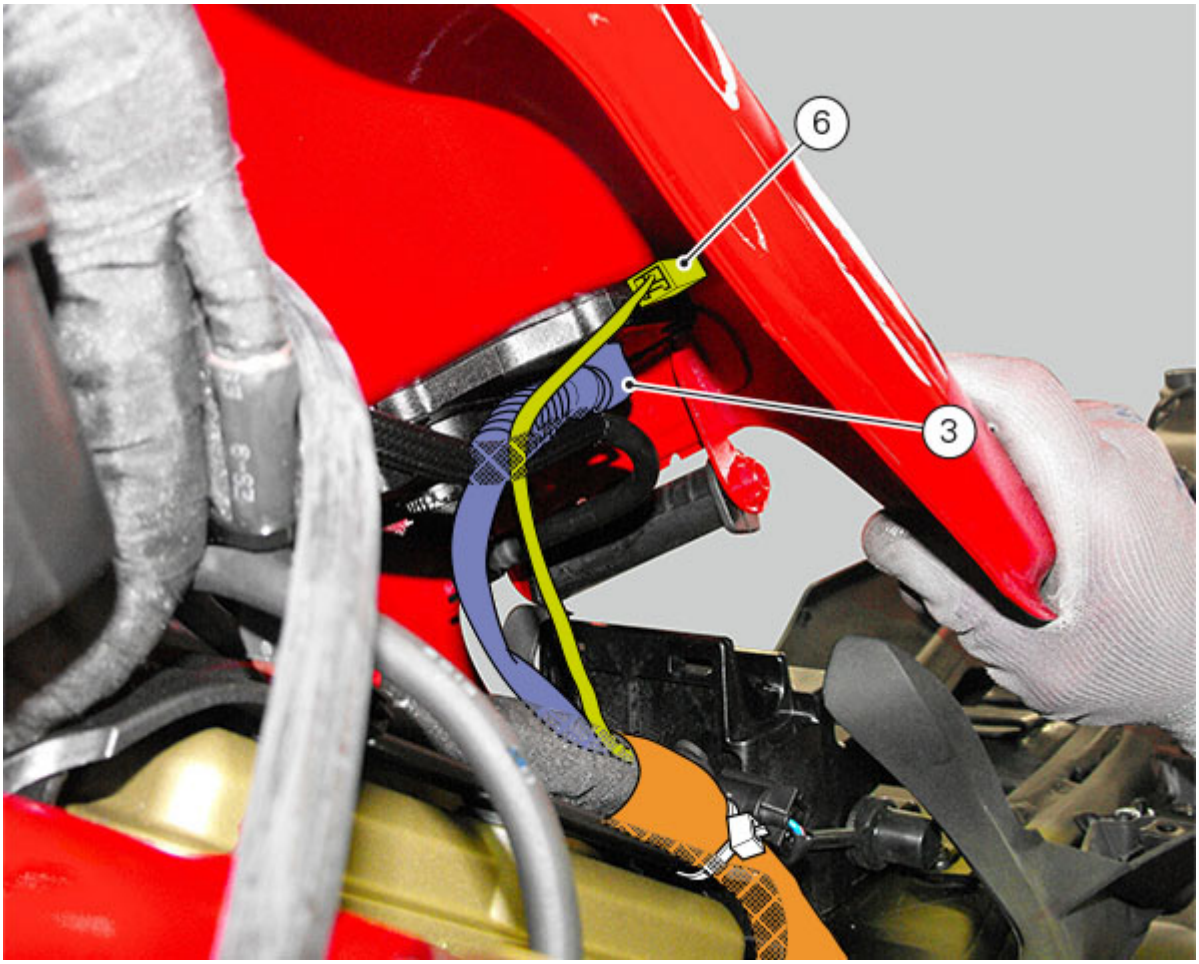

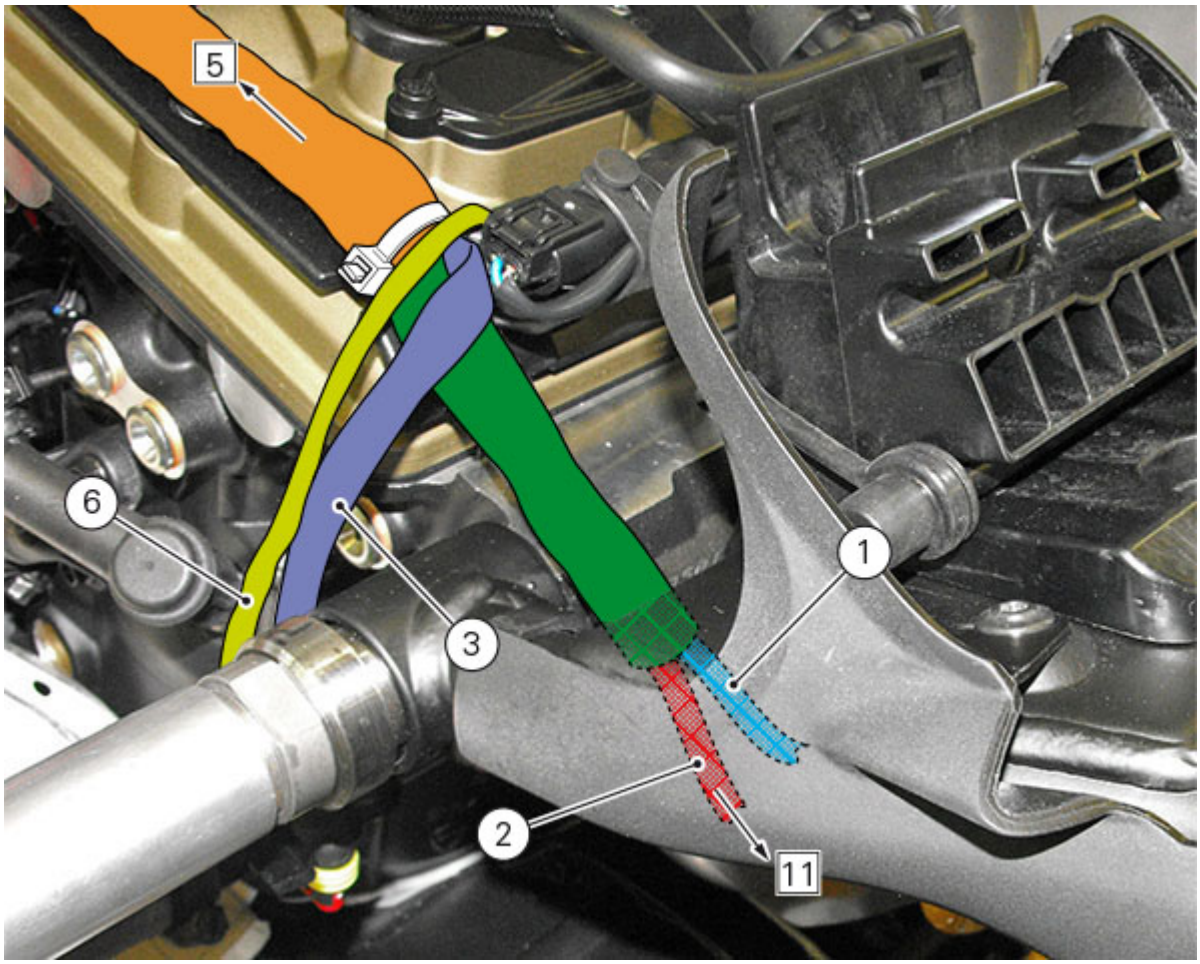
5
6
3
1
2
11

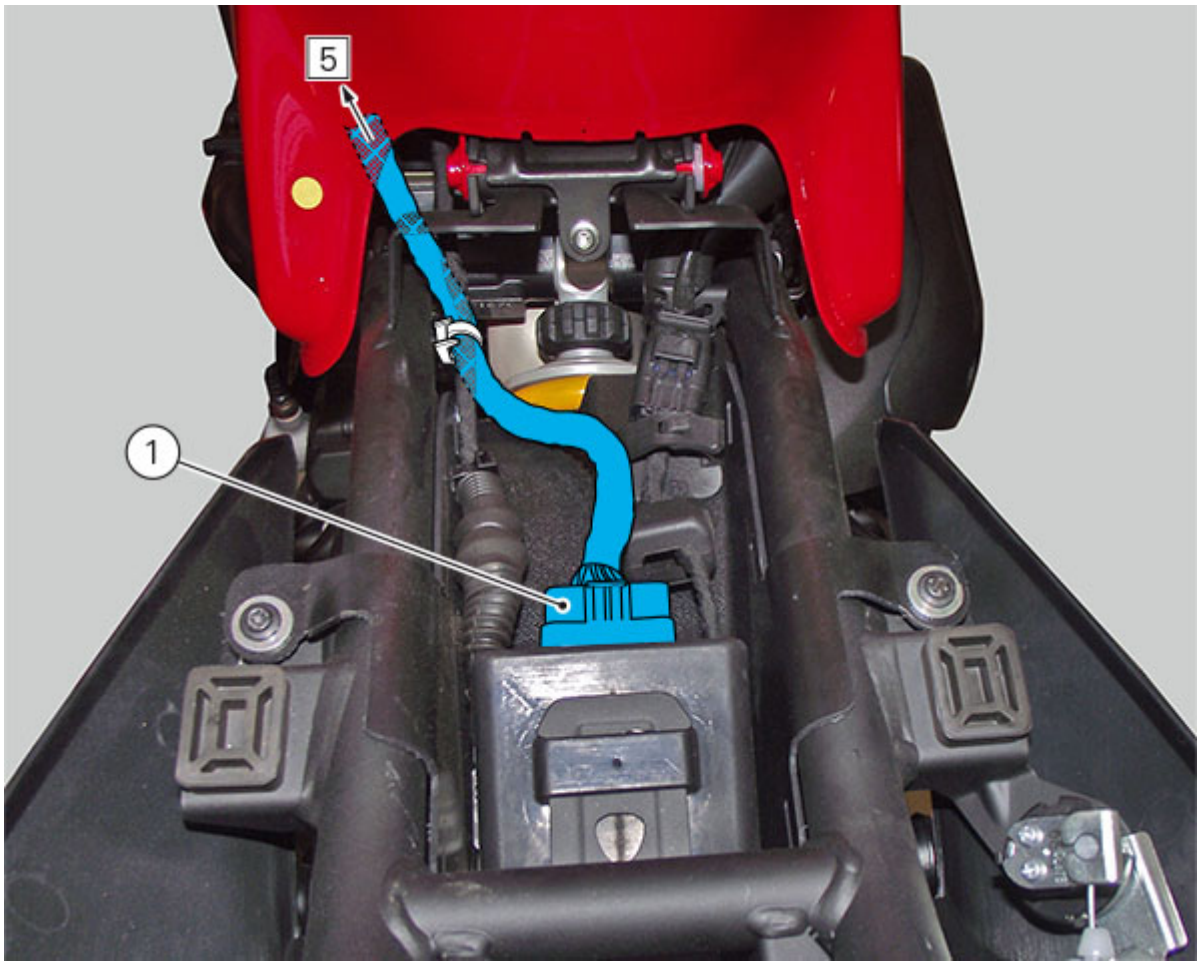
5
1

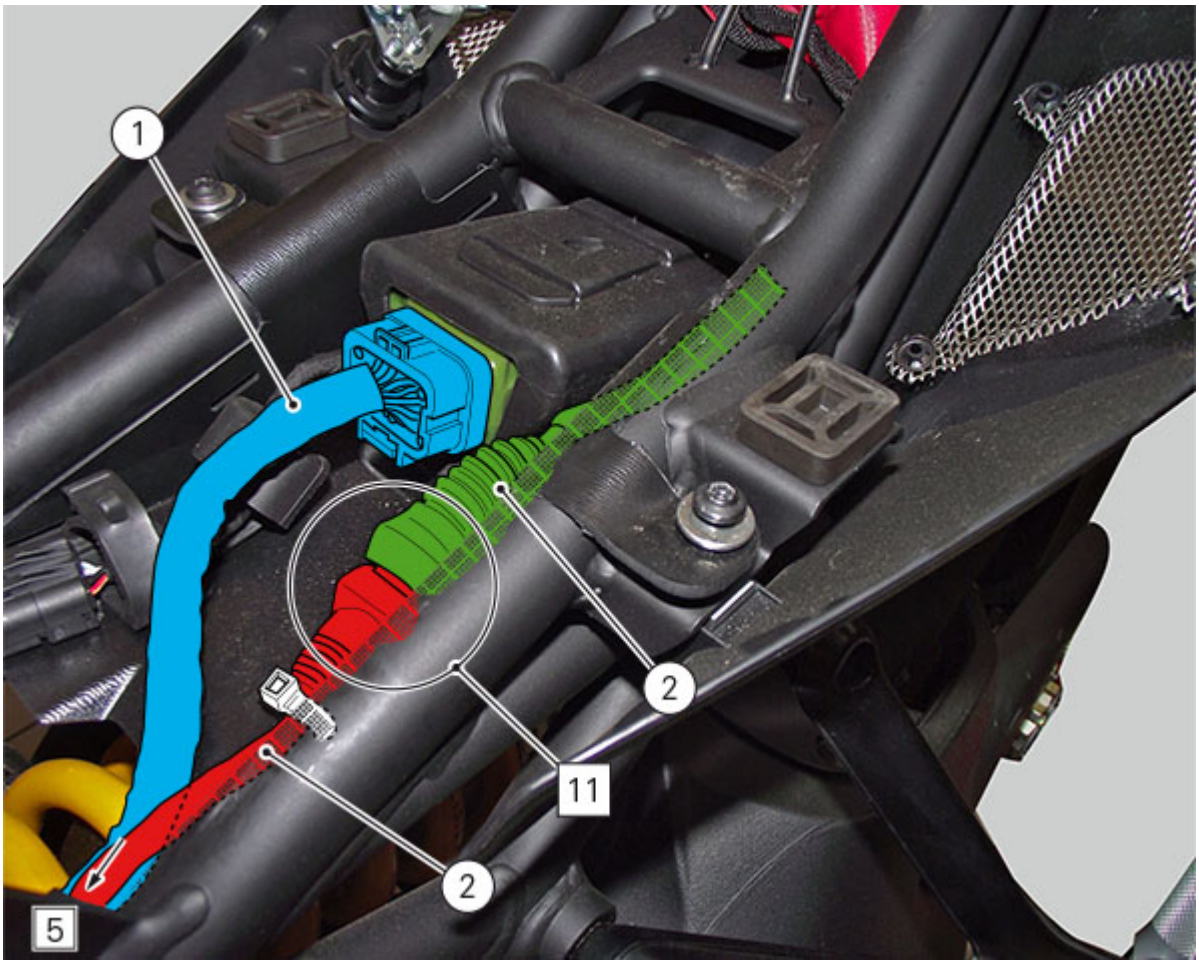

General key and "Routing wiring on frame".

Branch 4

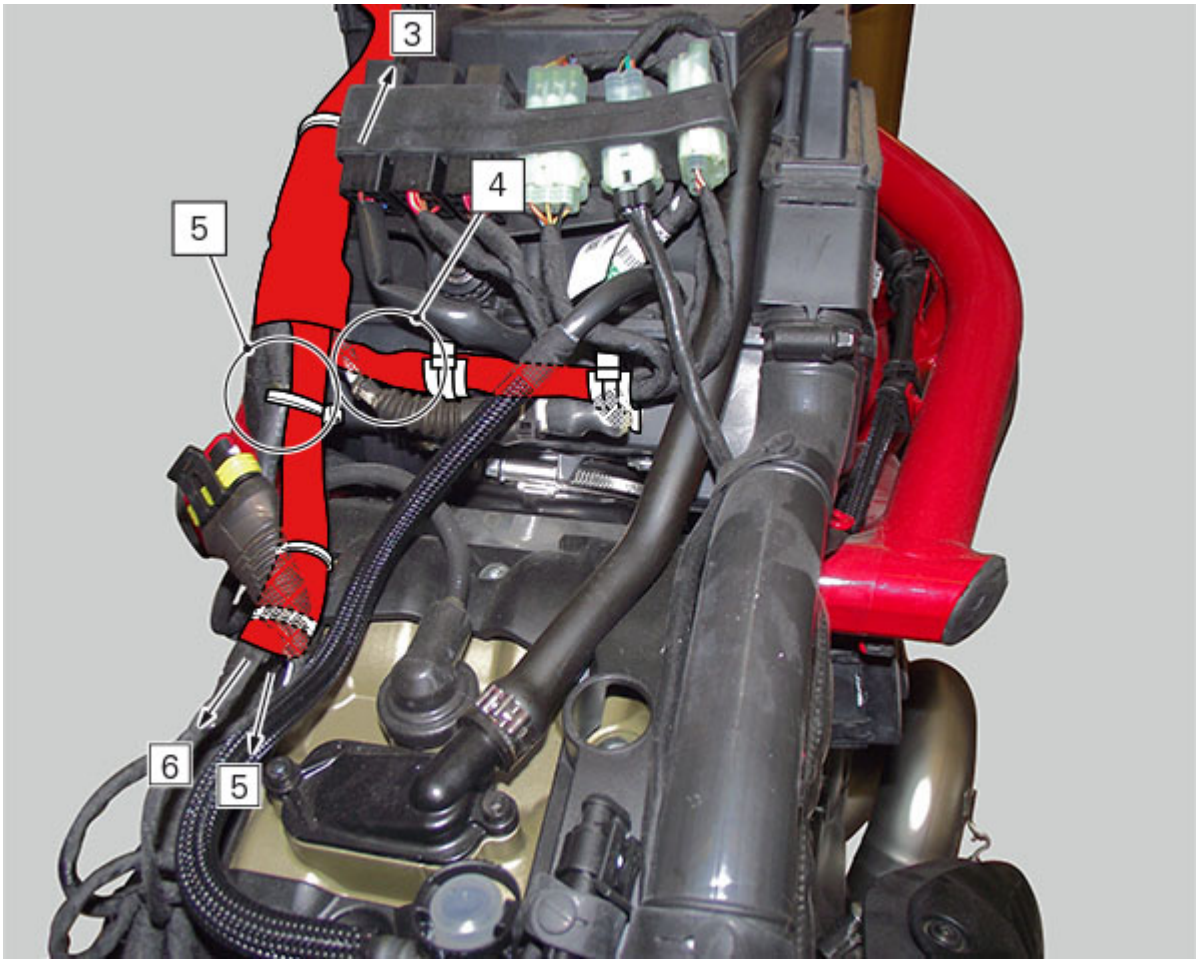

Table 4A

Pos.	DESCRIPTION
1	Fuel pump relay cable
2	Injection load relay cable
3	Starter relay cable
4	Vertical oxygen sensor cable
5	Injection wiring 1
6	Injection wiring 2
7	Injector 1 cable
8	Injector 2 cable
9	Potentiometer motor / ride-by-wire (TPS/ETV) cable

Fit the relays in the corresponding housings of the bracket, aiming them so that edge (A) matches the recess (B).

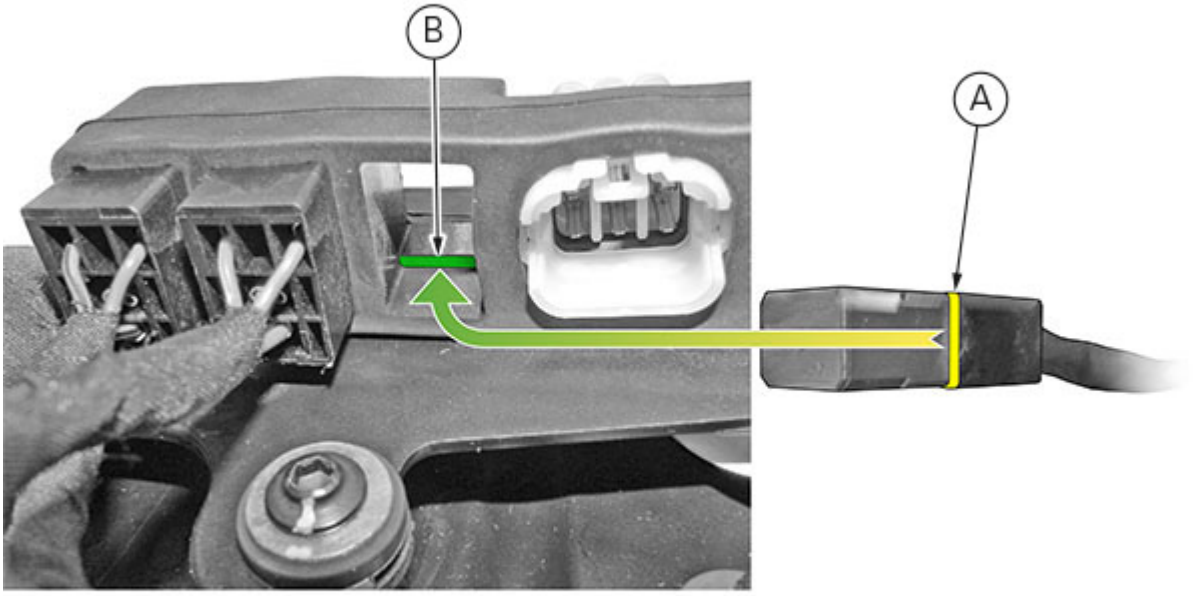
B
A

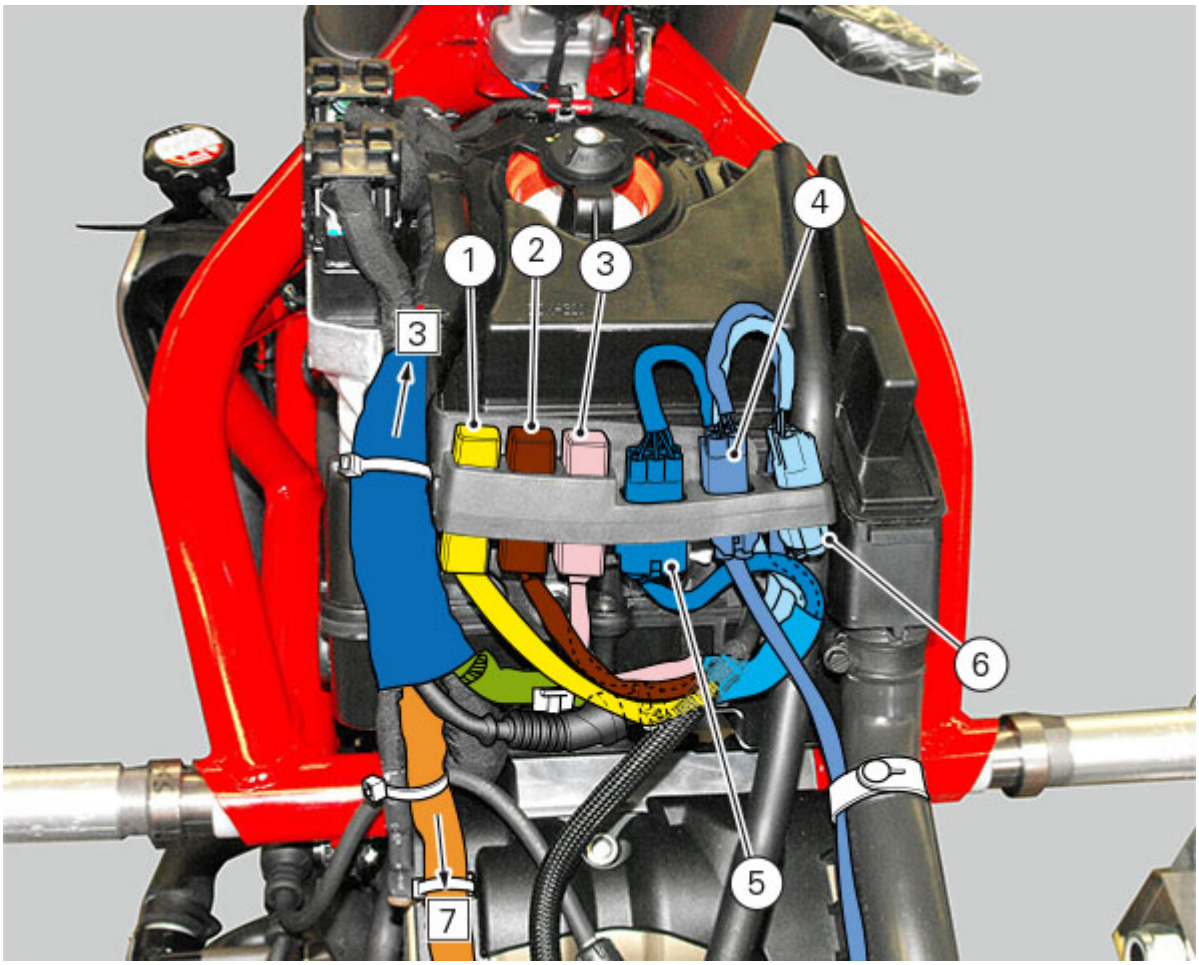
1
2
3
4
3
5
6
7

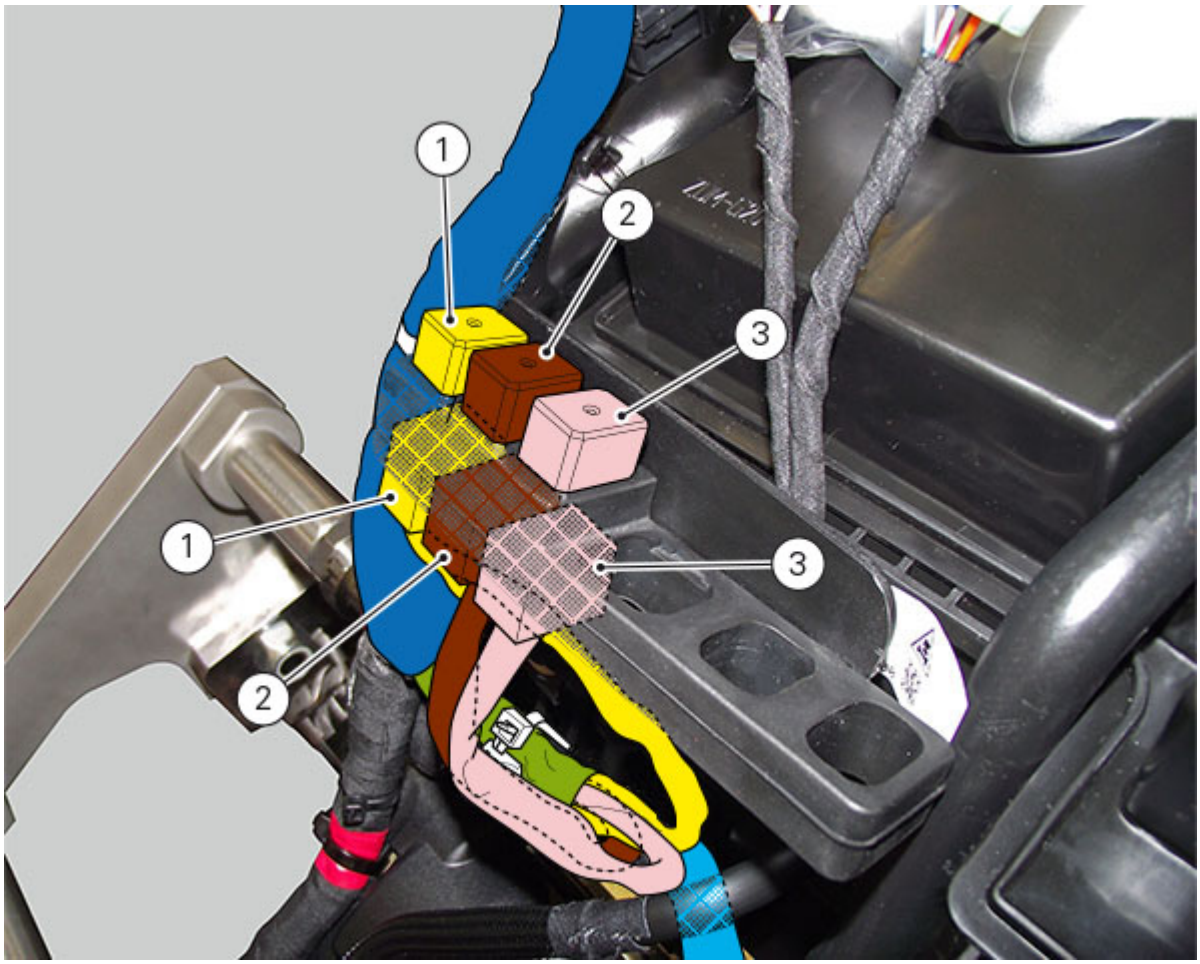
1
2
3
1
3
2

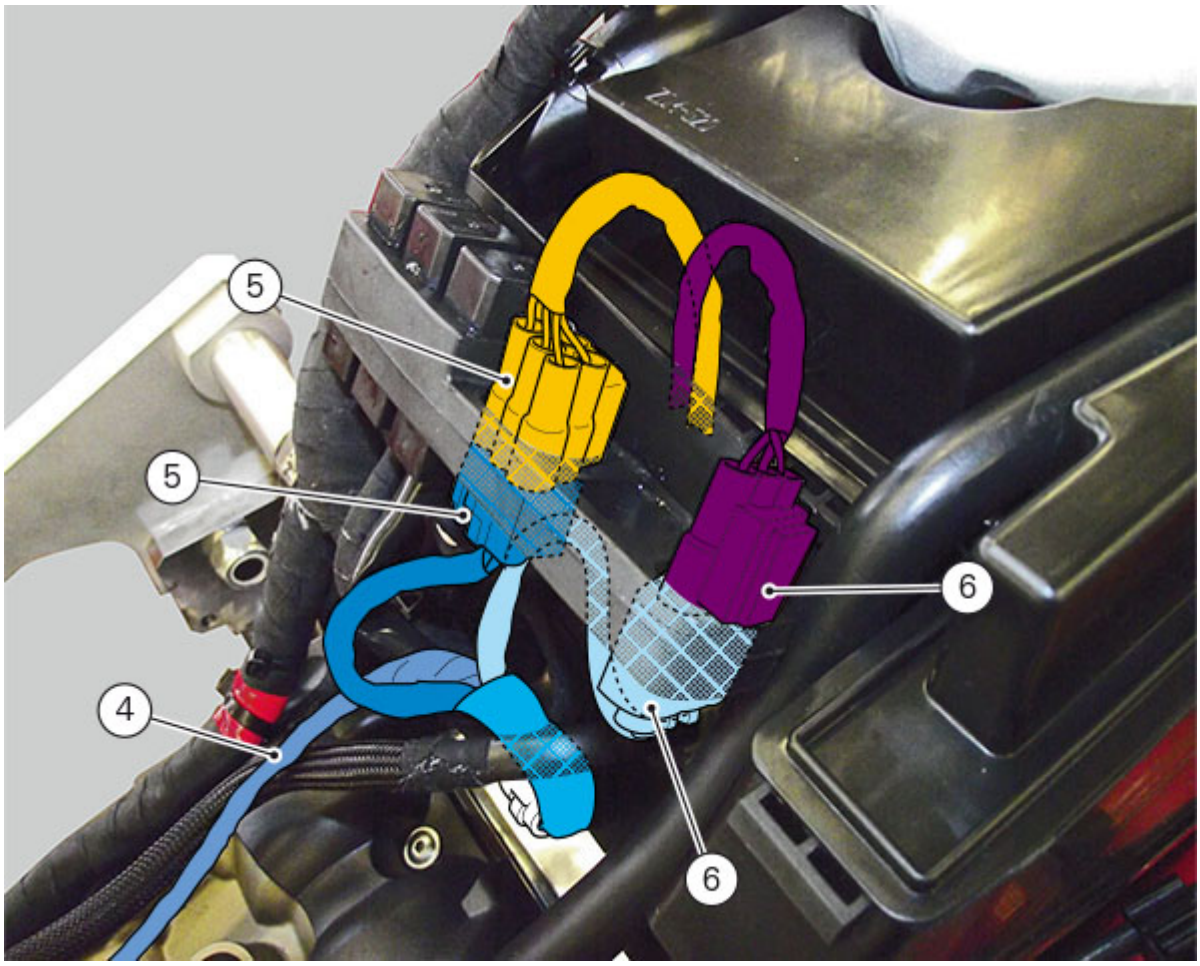
5
5
6
4
6

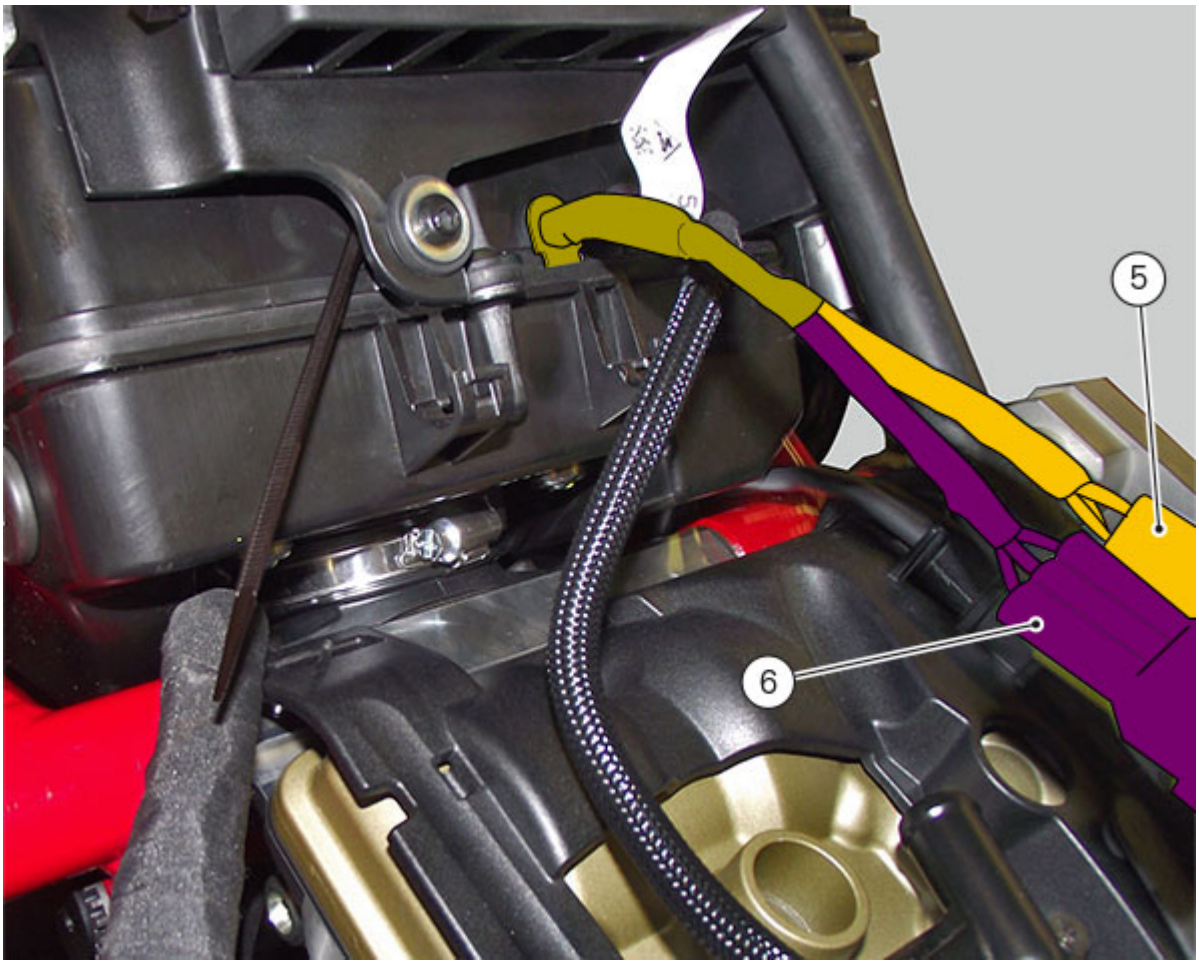

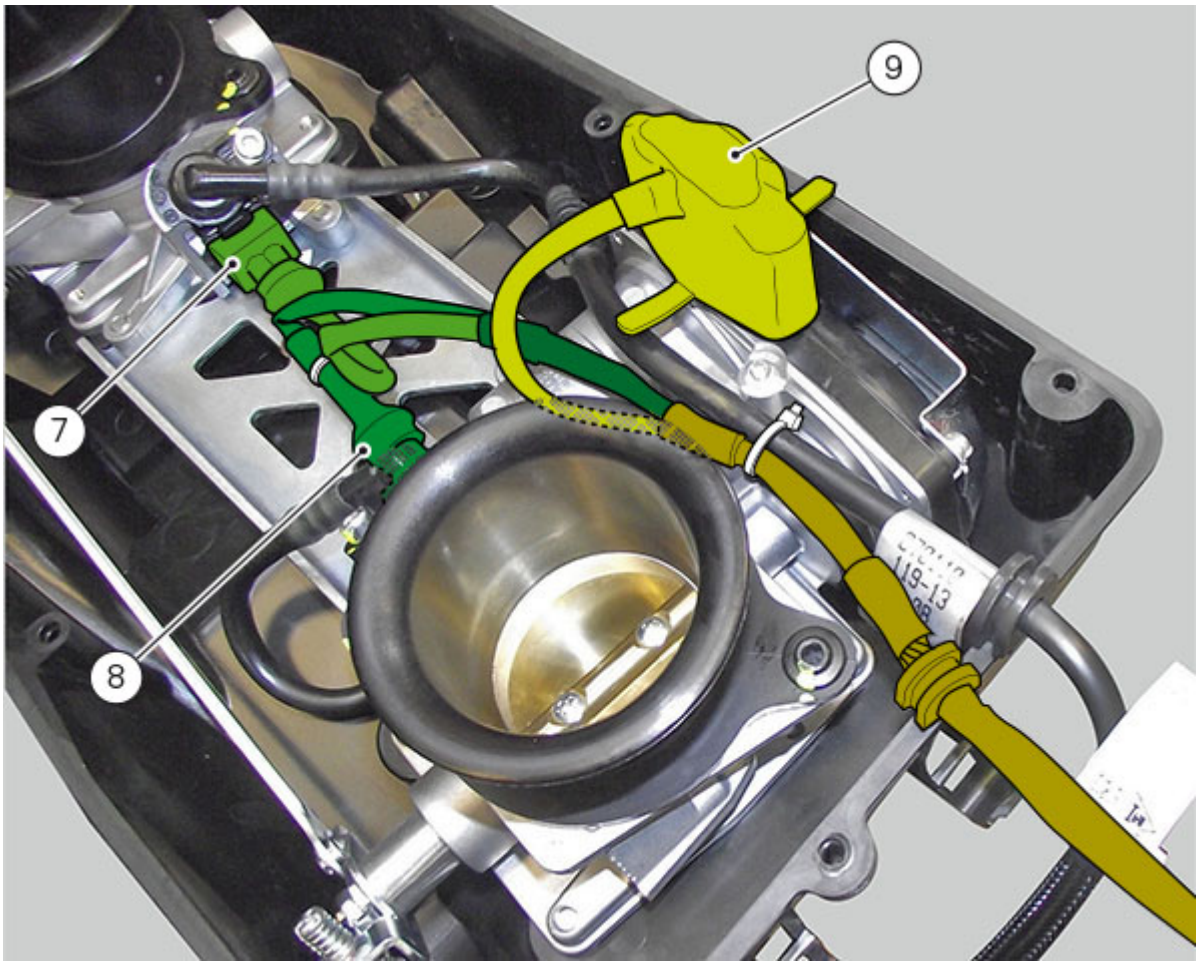

Table 4B

Pos.	DESCRIPTION
4	Vertical oxygen sensor cable

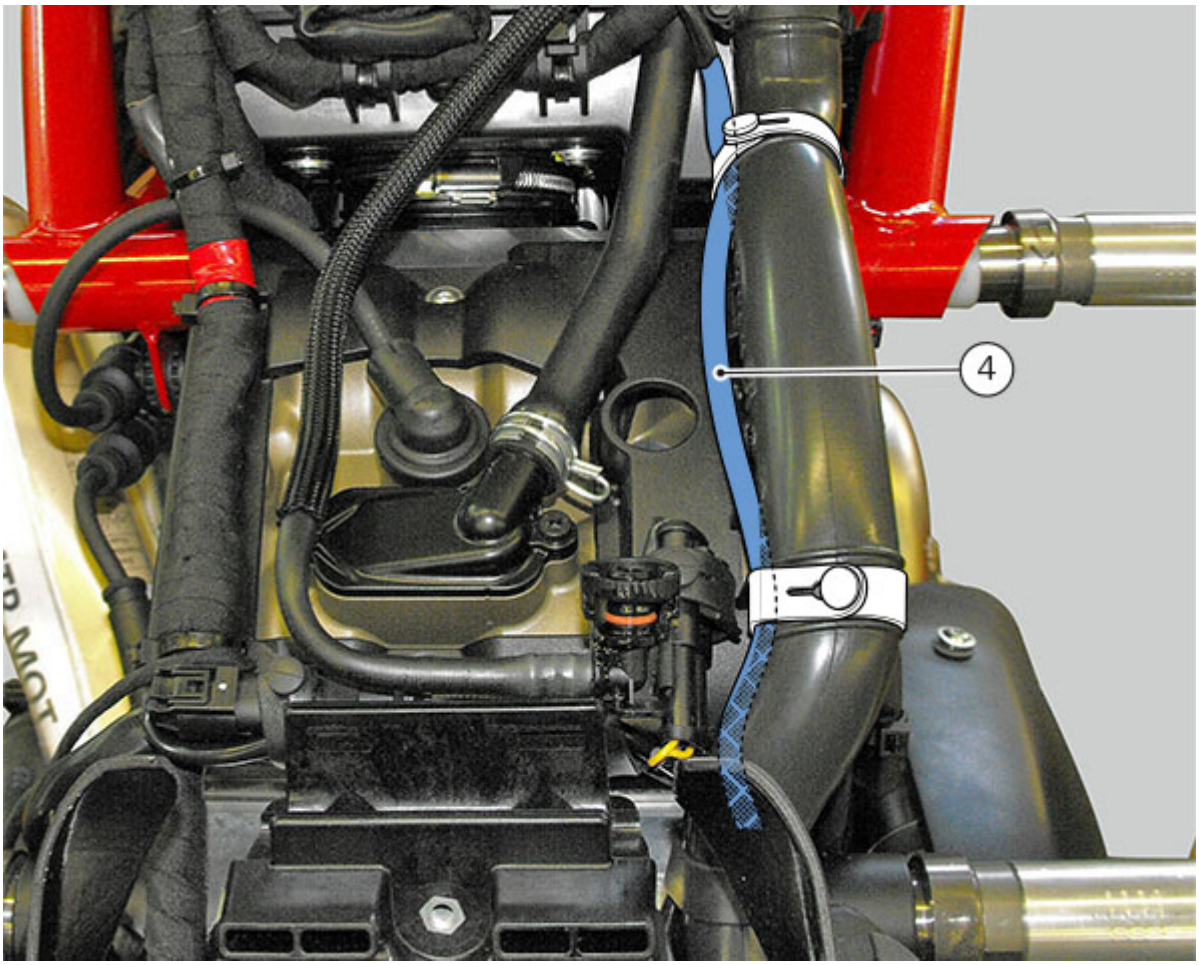

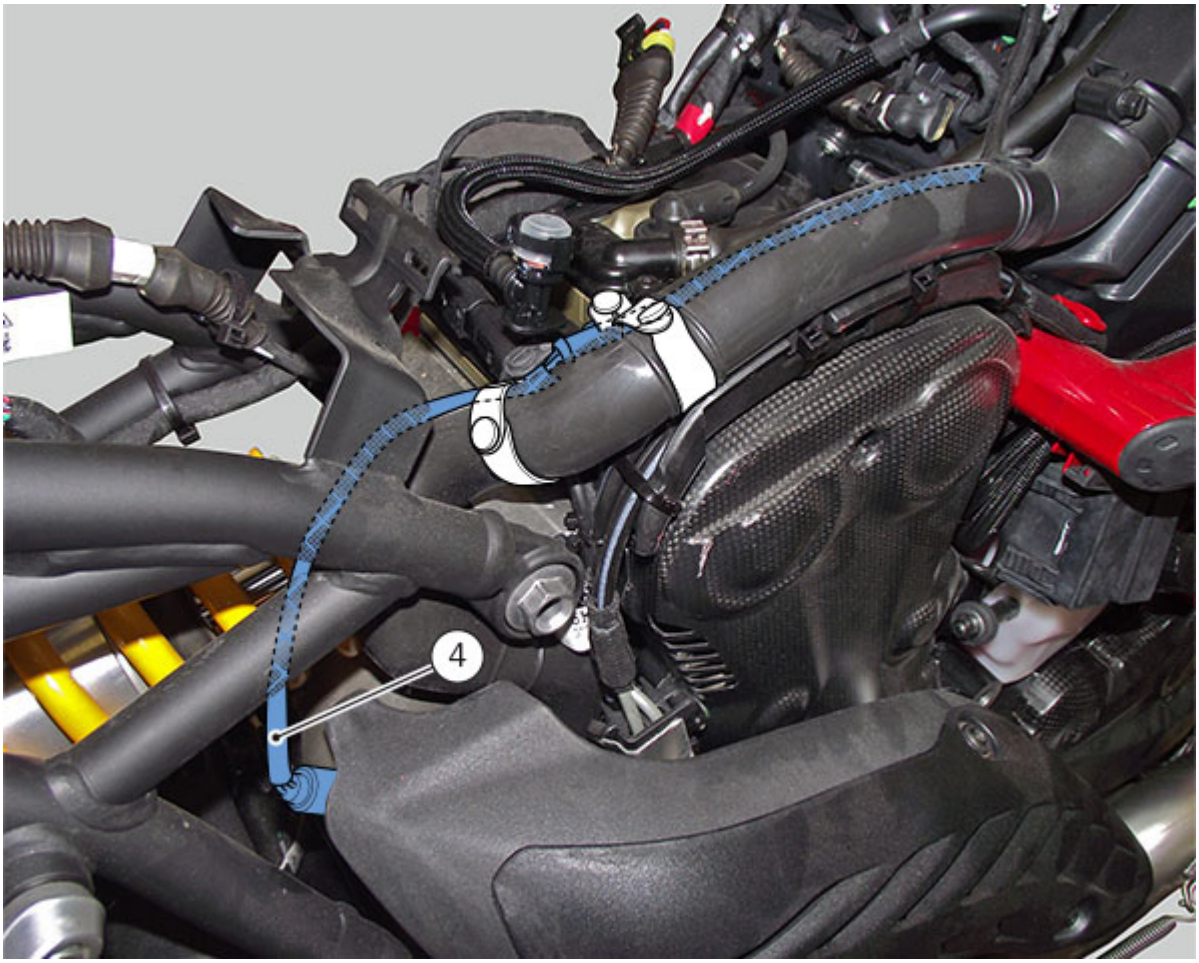

General key and "Routing wiring on frame".

Branch 3

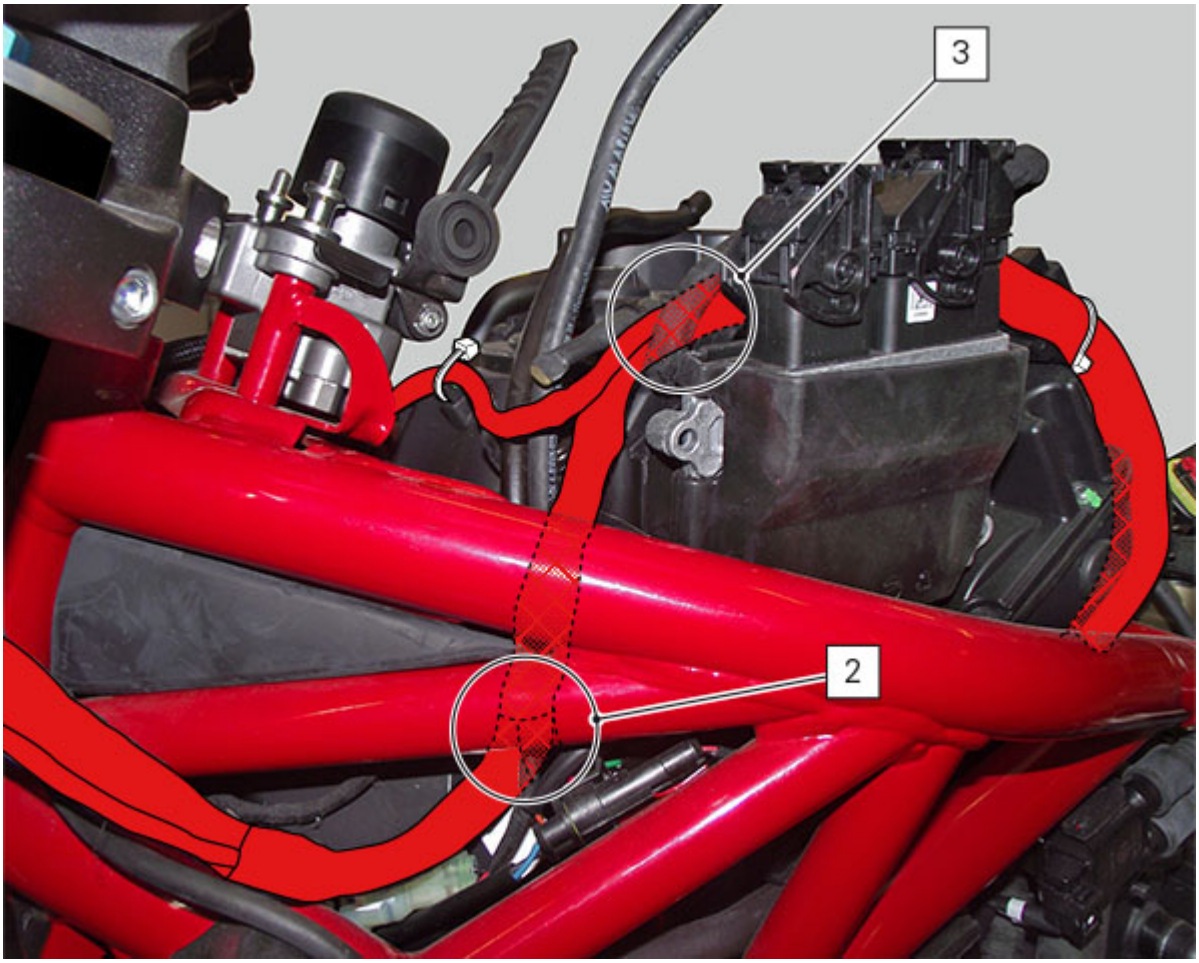

Table 3A

Pos.	DESCRIPTION
1	Ambient temperature sensor cable
2	Secondary air system connector cable
3	Front speed sensor cable
4	RH fan cable
5	ECU 1 connection cable wiring
6	ECU 2 connection cable wiring

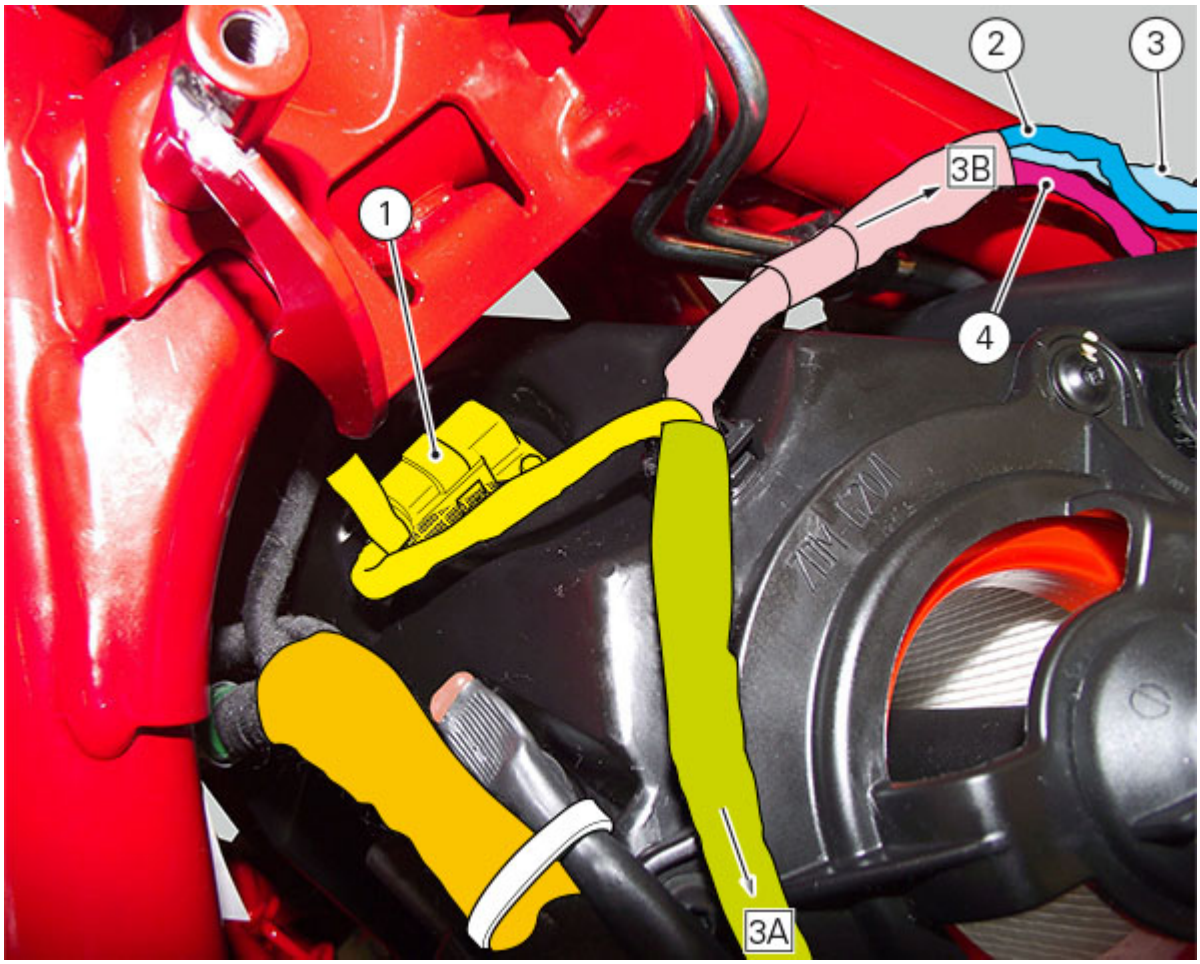
2
3
3B
1
4
3A

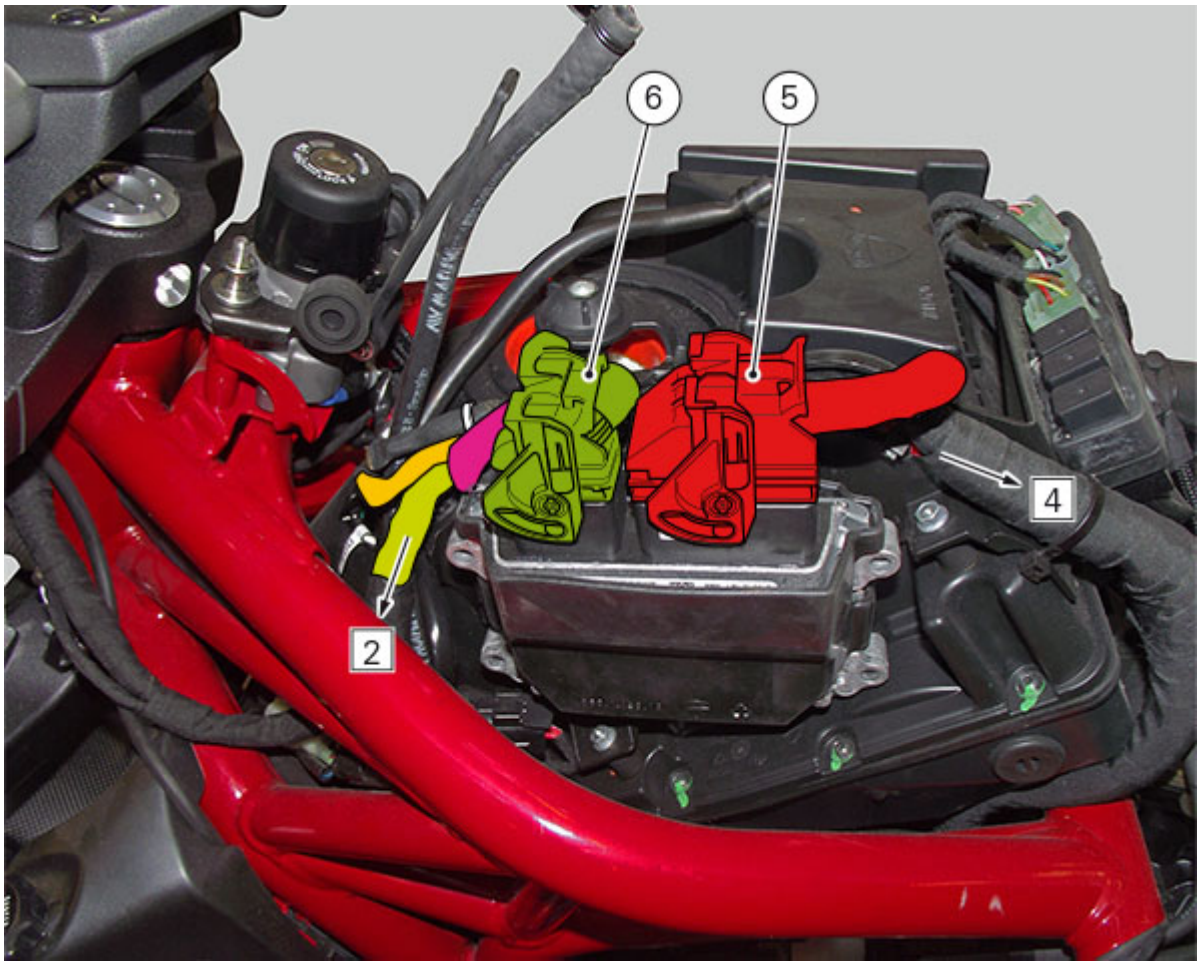
6
5
4
2

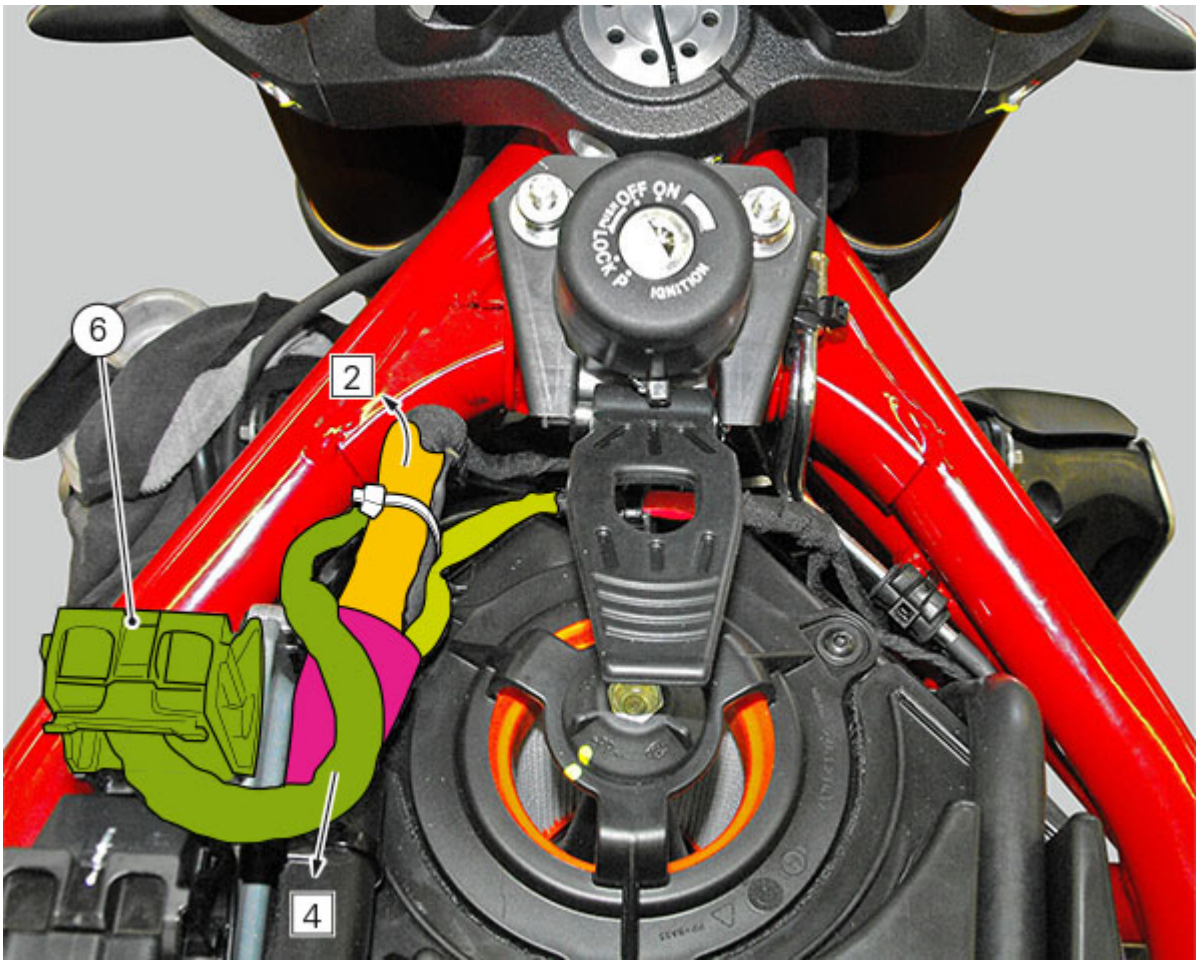

Table 3B

Pos.	DESCRIPTION
1	Ambient temperature sensor cable
2	Secondary air system connector cable
3	Front speed sensor cable
4	RH fan cable
5	ECU 1 connection cable wiring
6	ECU 2 connection cable wiring

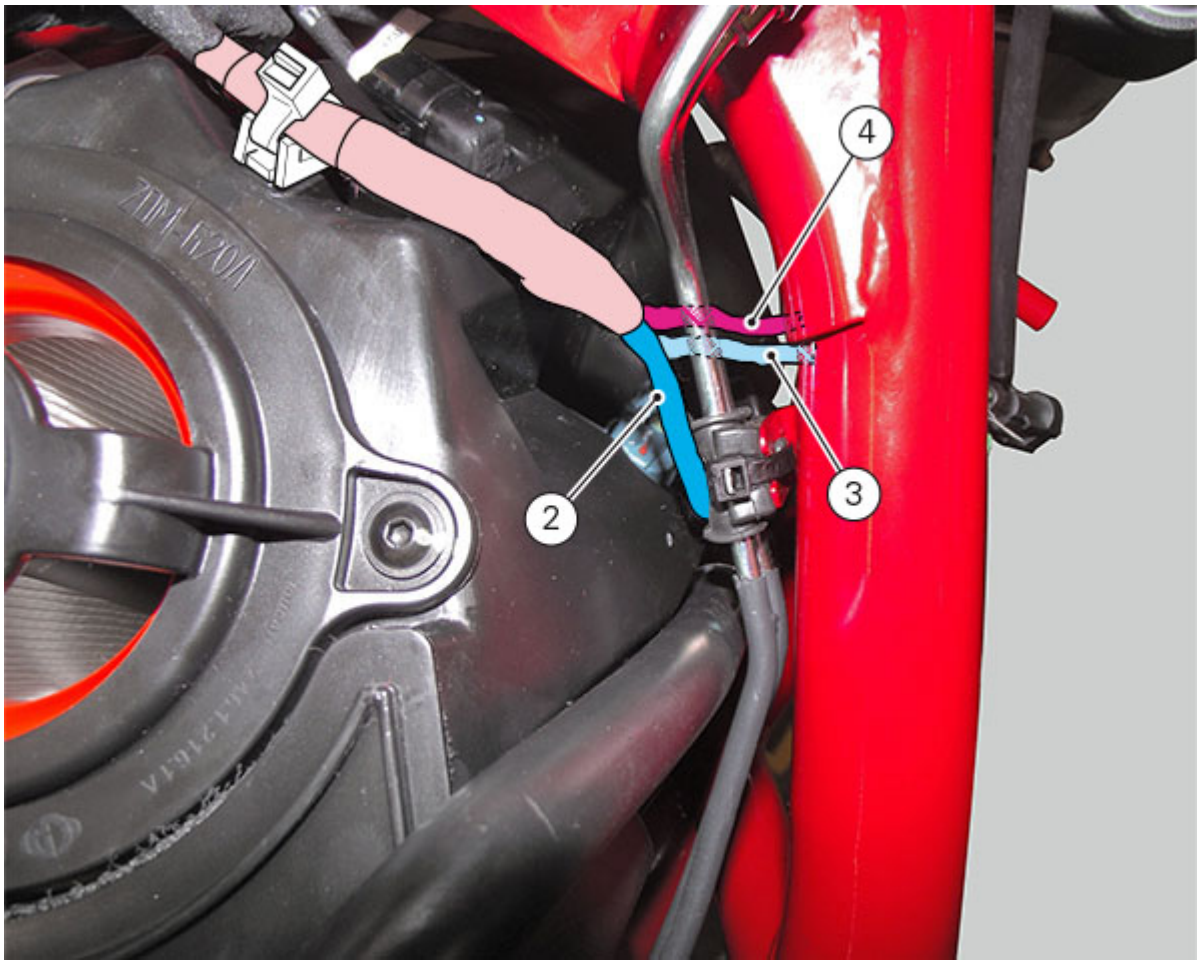
4
2
3

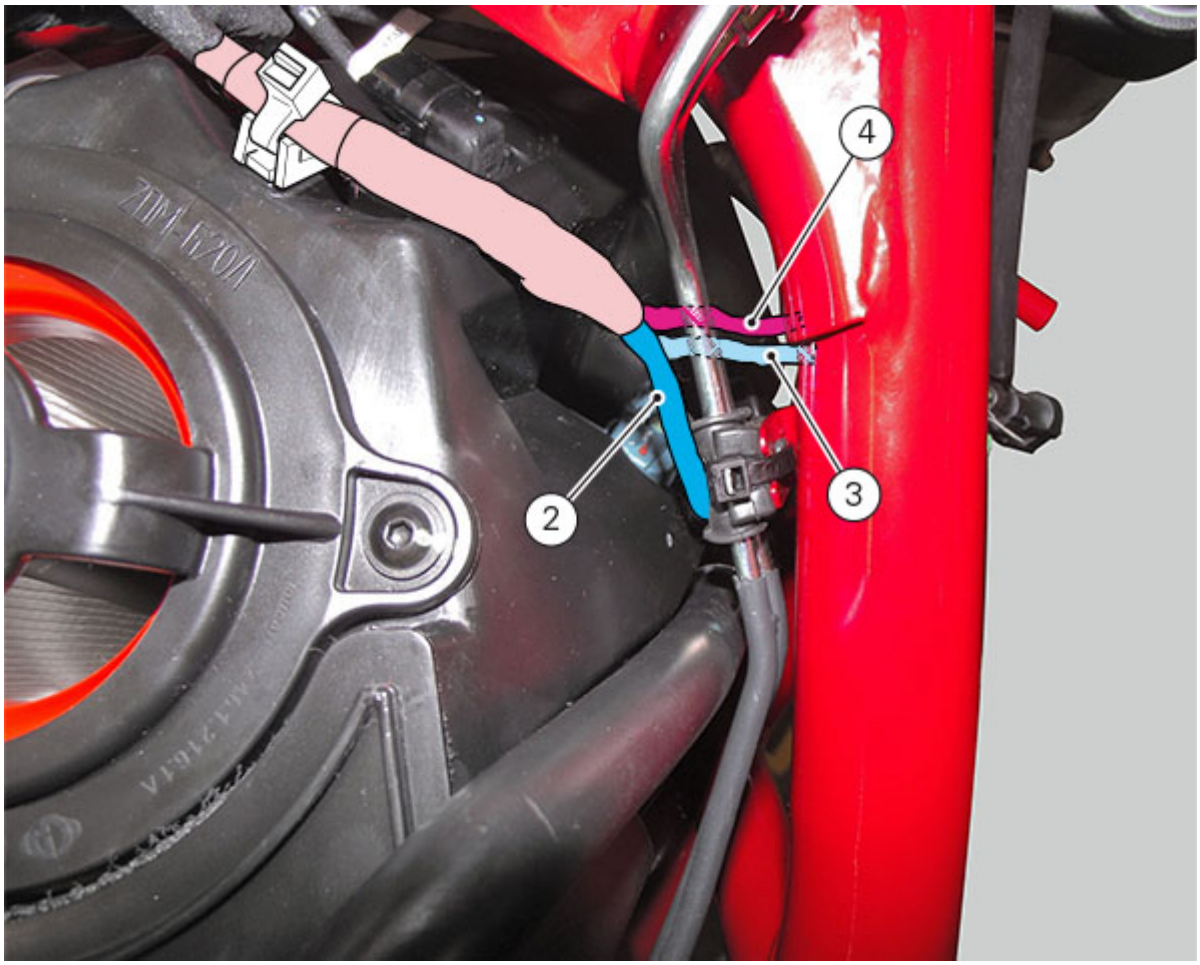
4
2
3

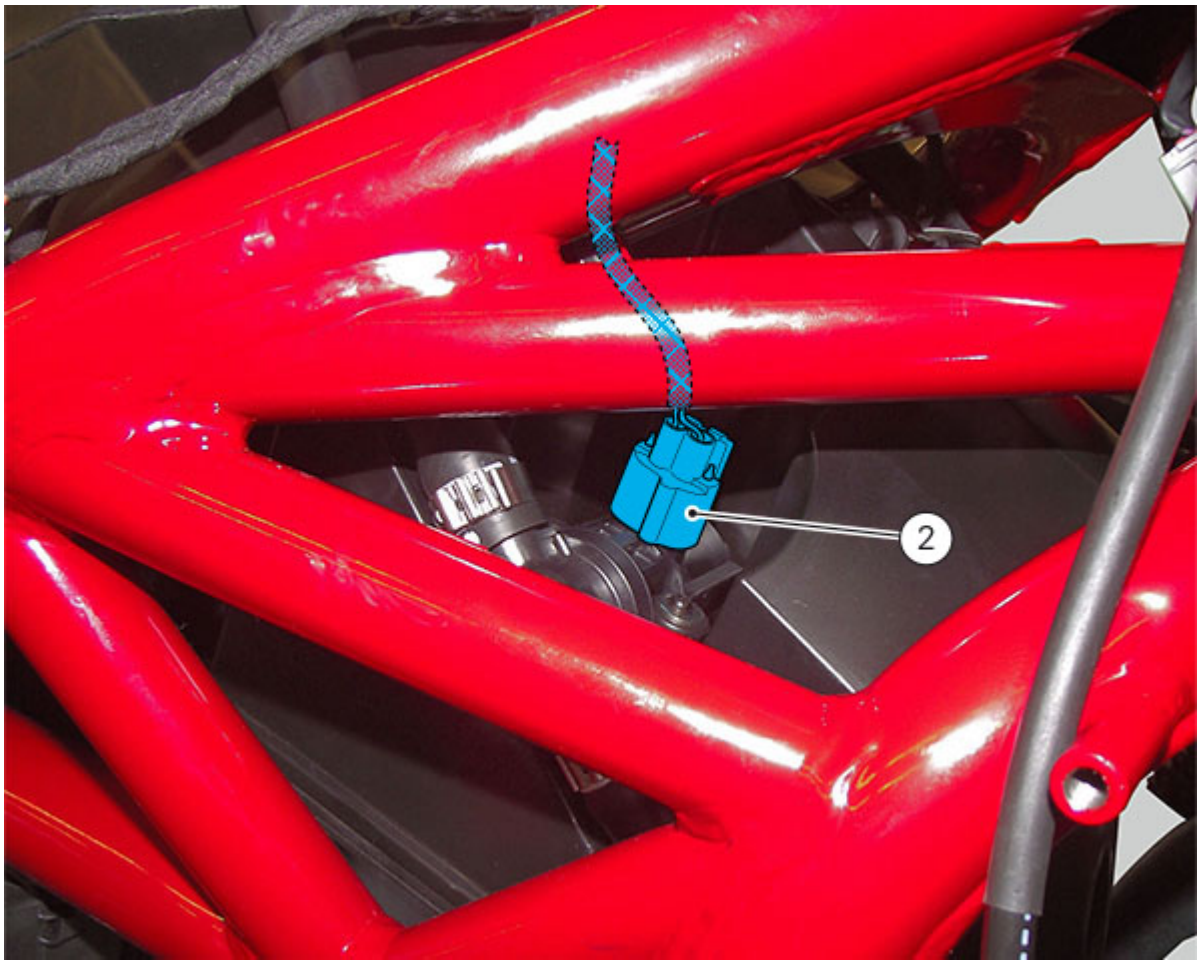
2

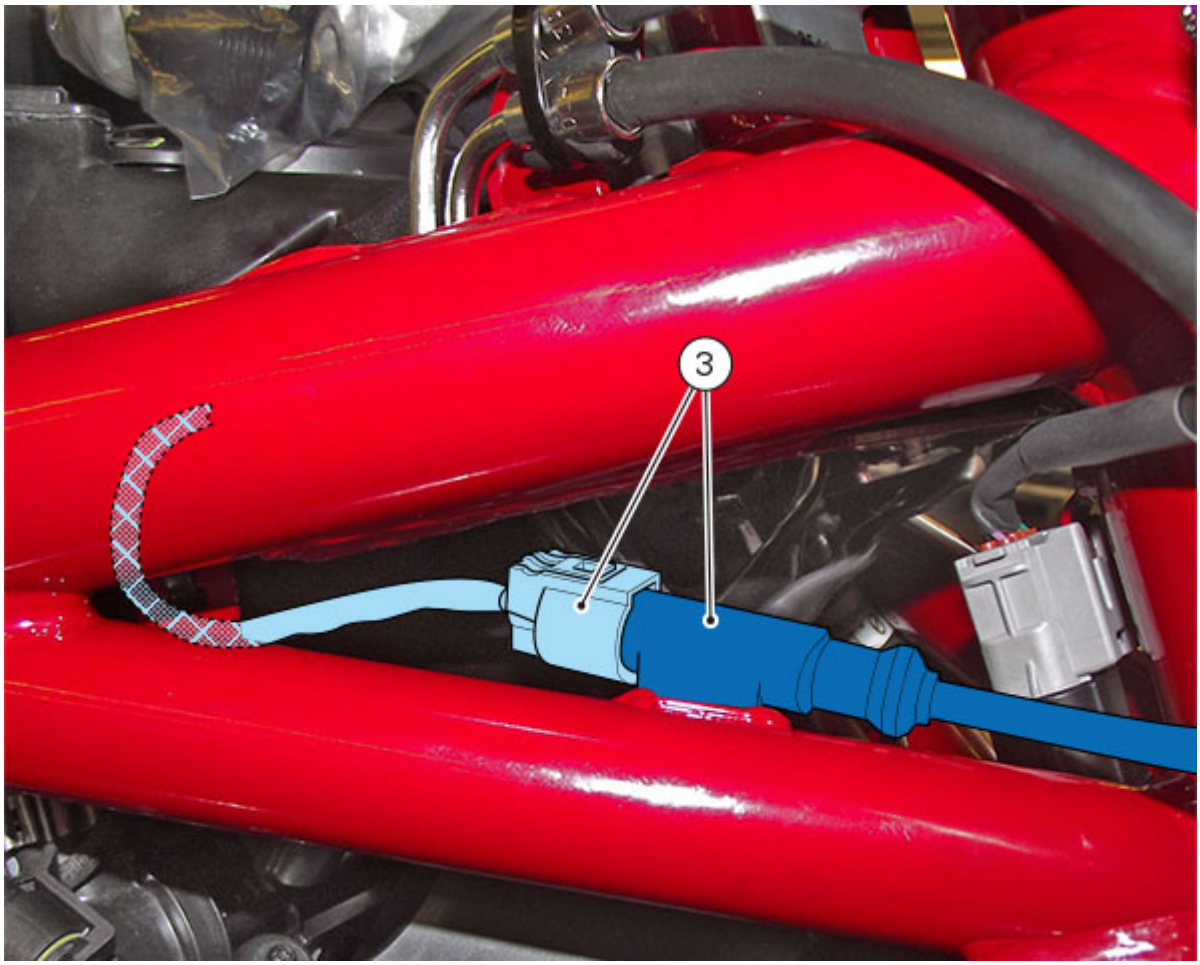
3

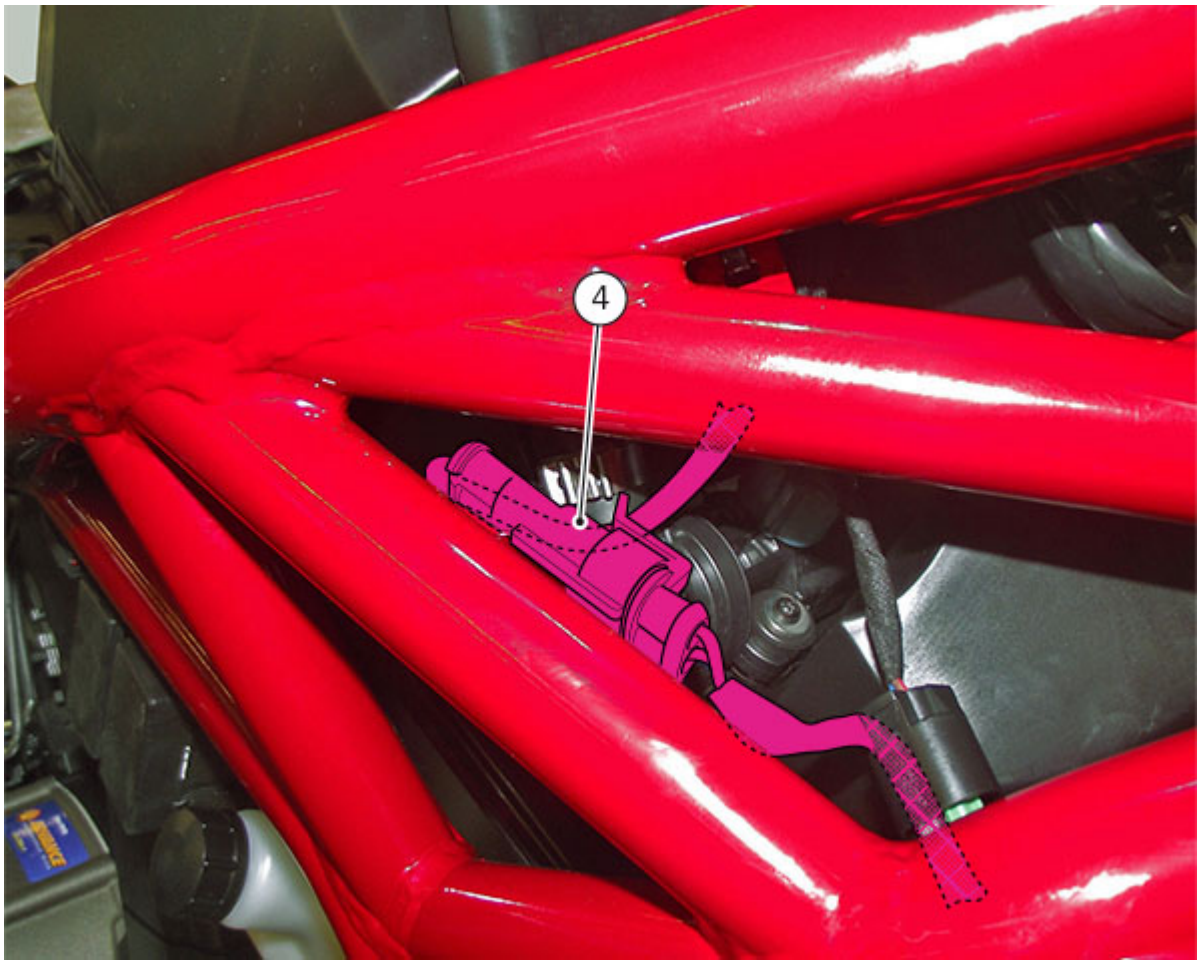
4

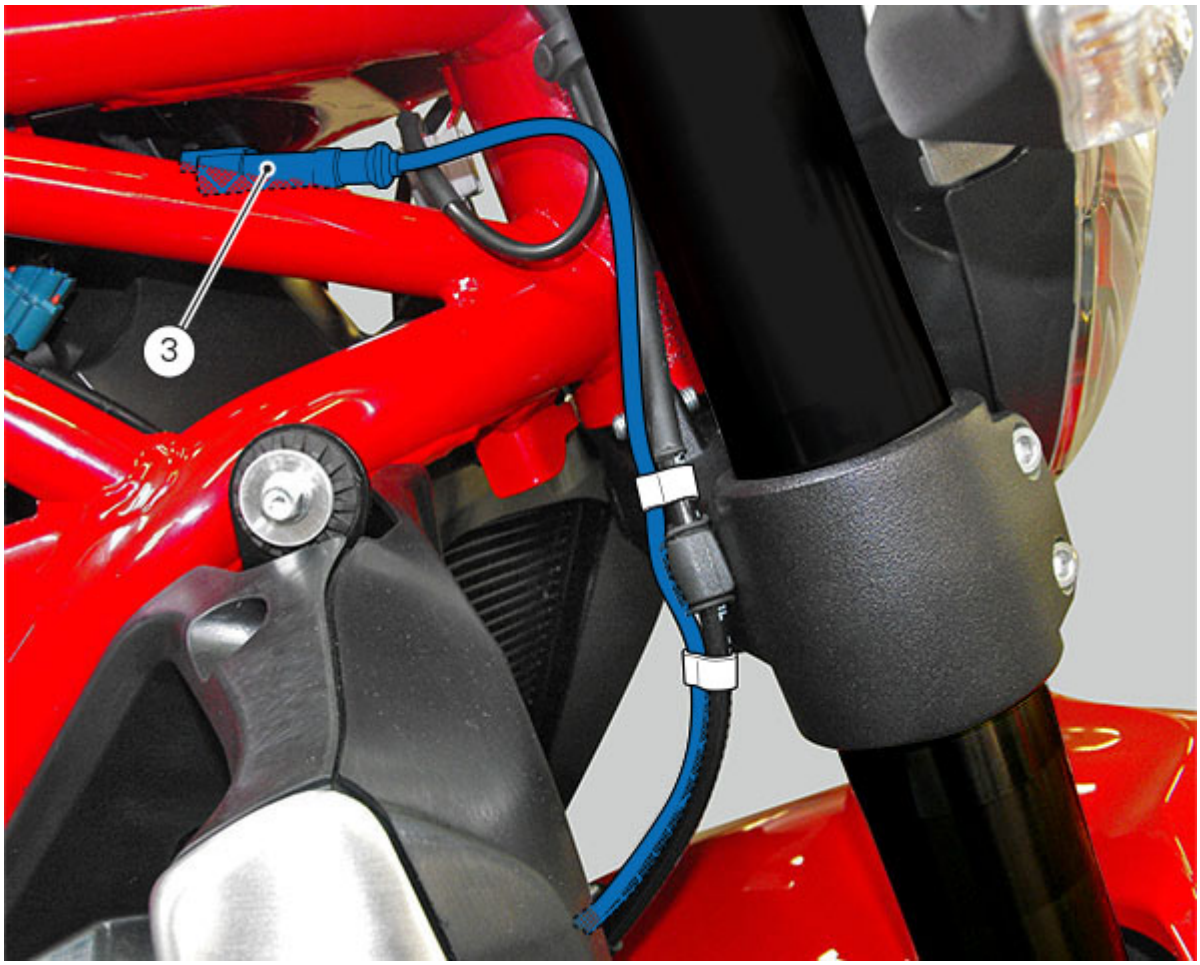
3


3
brembo
ÖHLINS
DUCATI


3
brembo
ÖHLINS
DUCATI



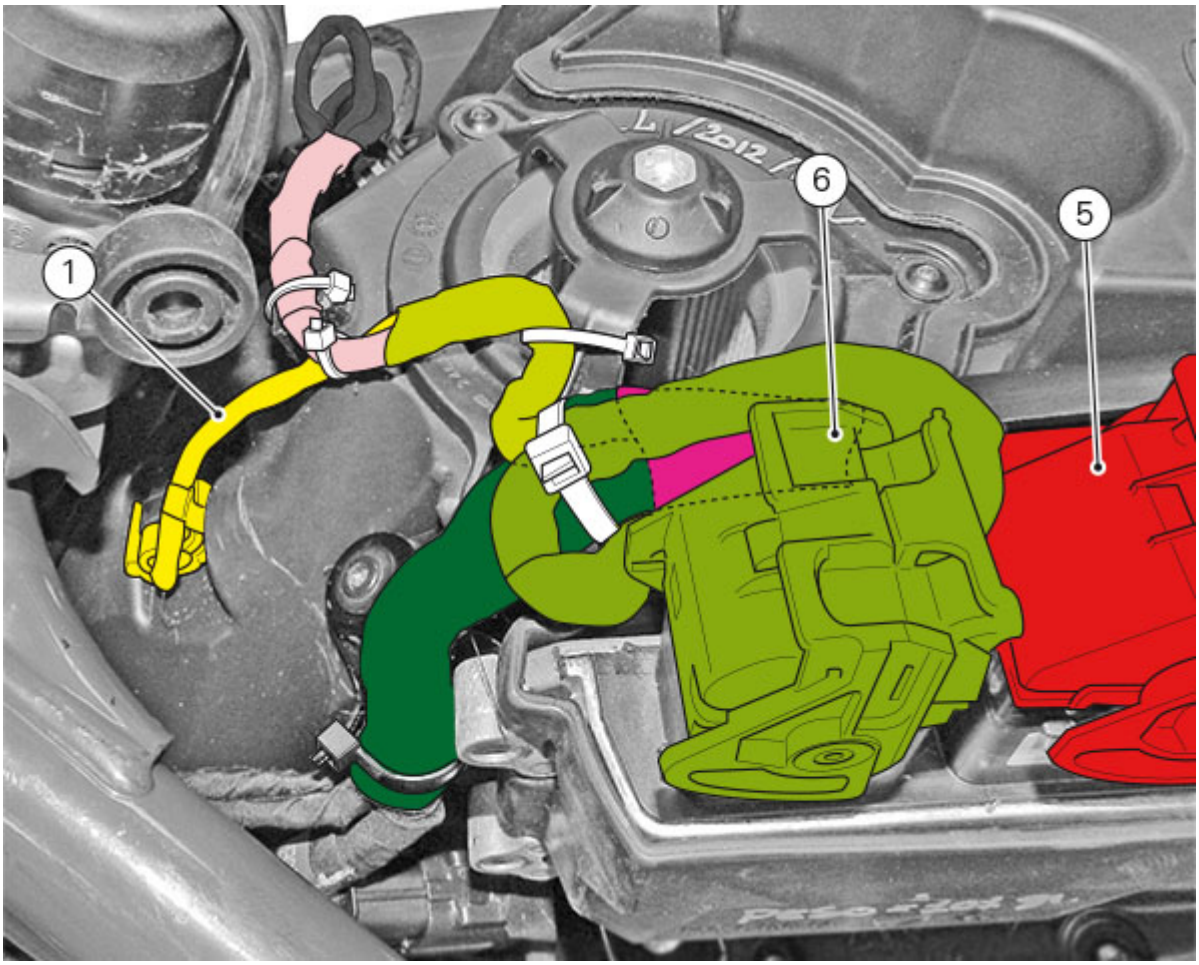

General key and "Routing wiring on frame".

Branch 2

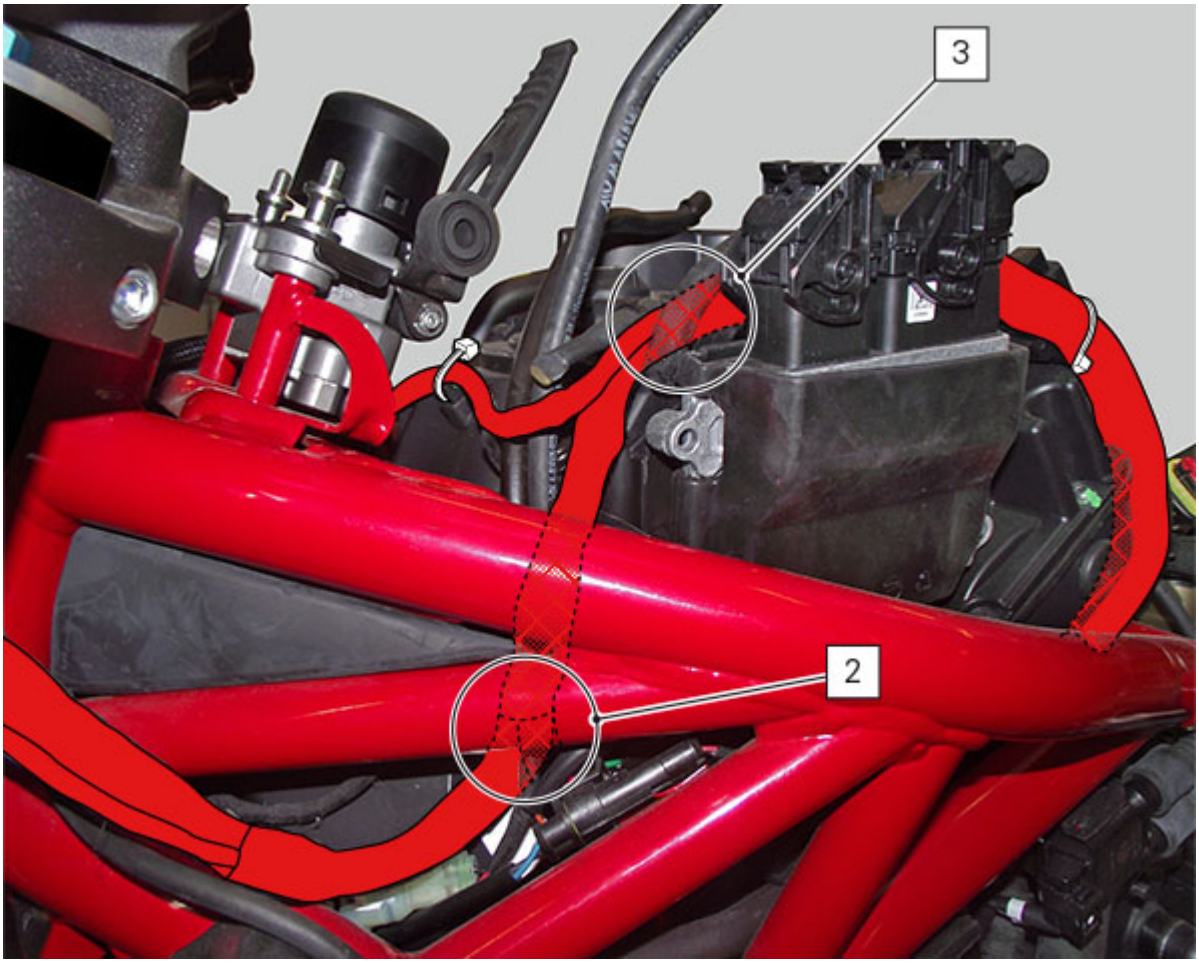

Table 2A

Pos.	DESCRIPTION
1	Throttle twistgrip position sensor (APS) cable
2	Optional presetting cable
3	Key switch cable
4	Immobilizer cable
5	LH fan cable


1

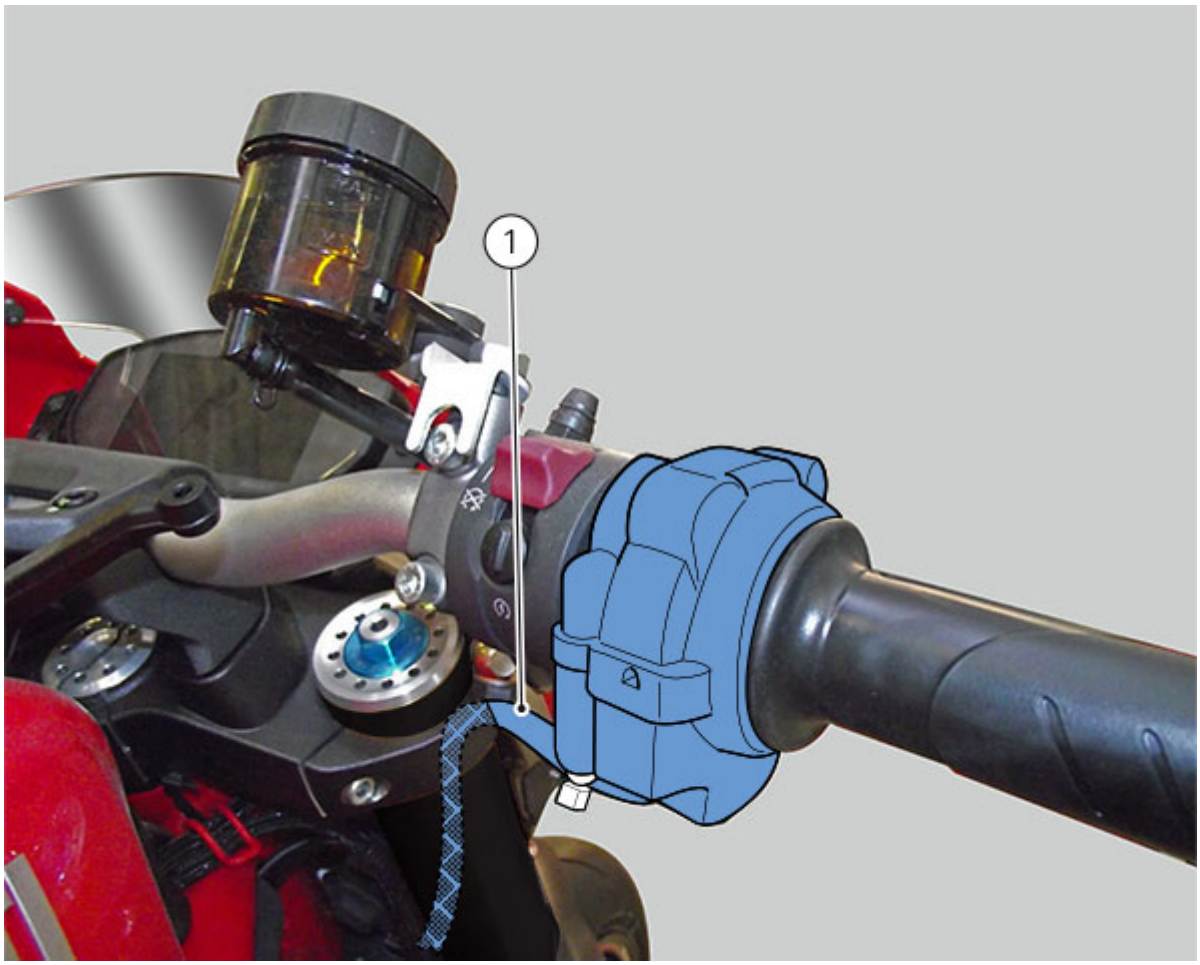
1

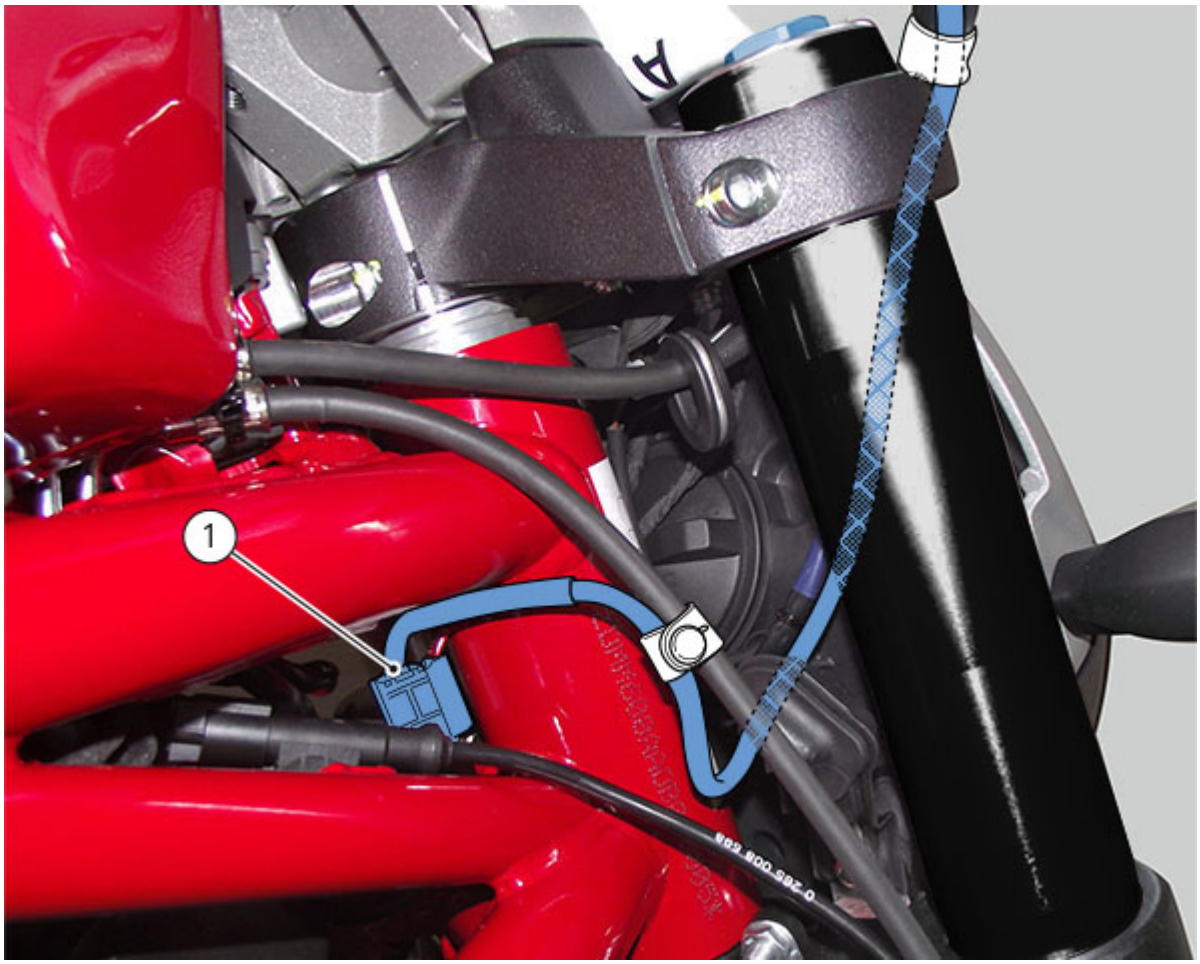
1

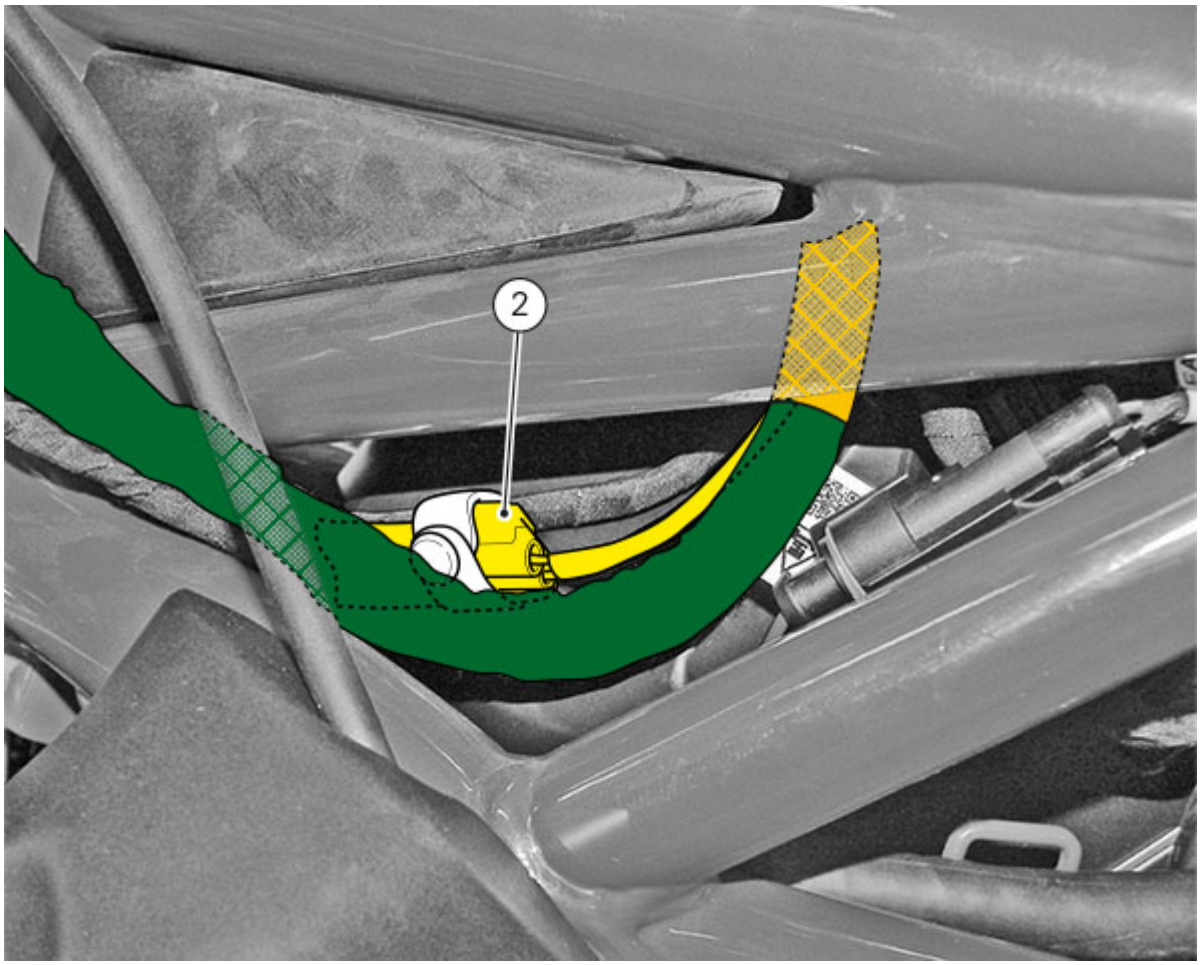
2

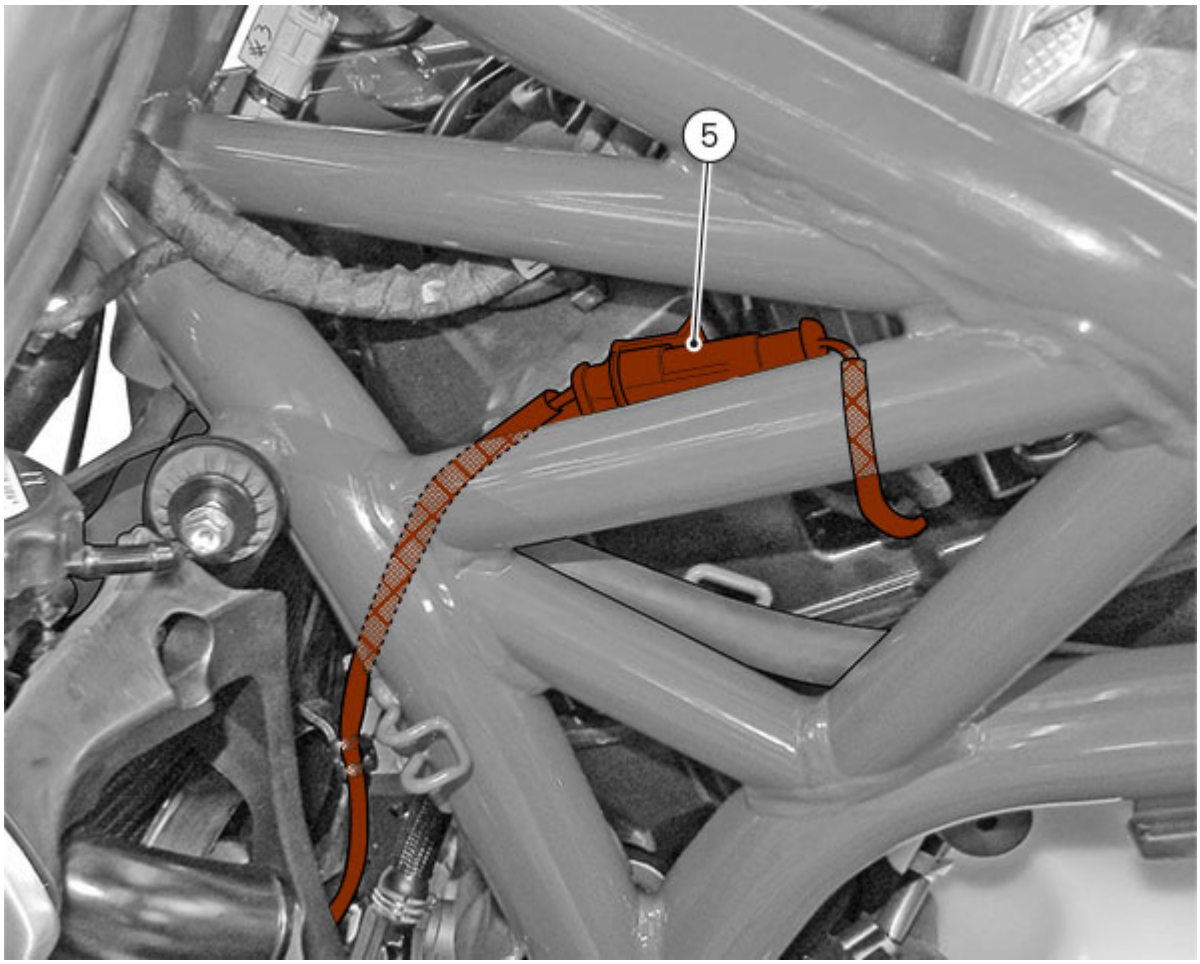
5

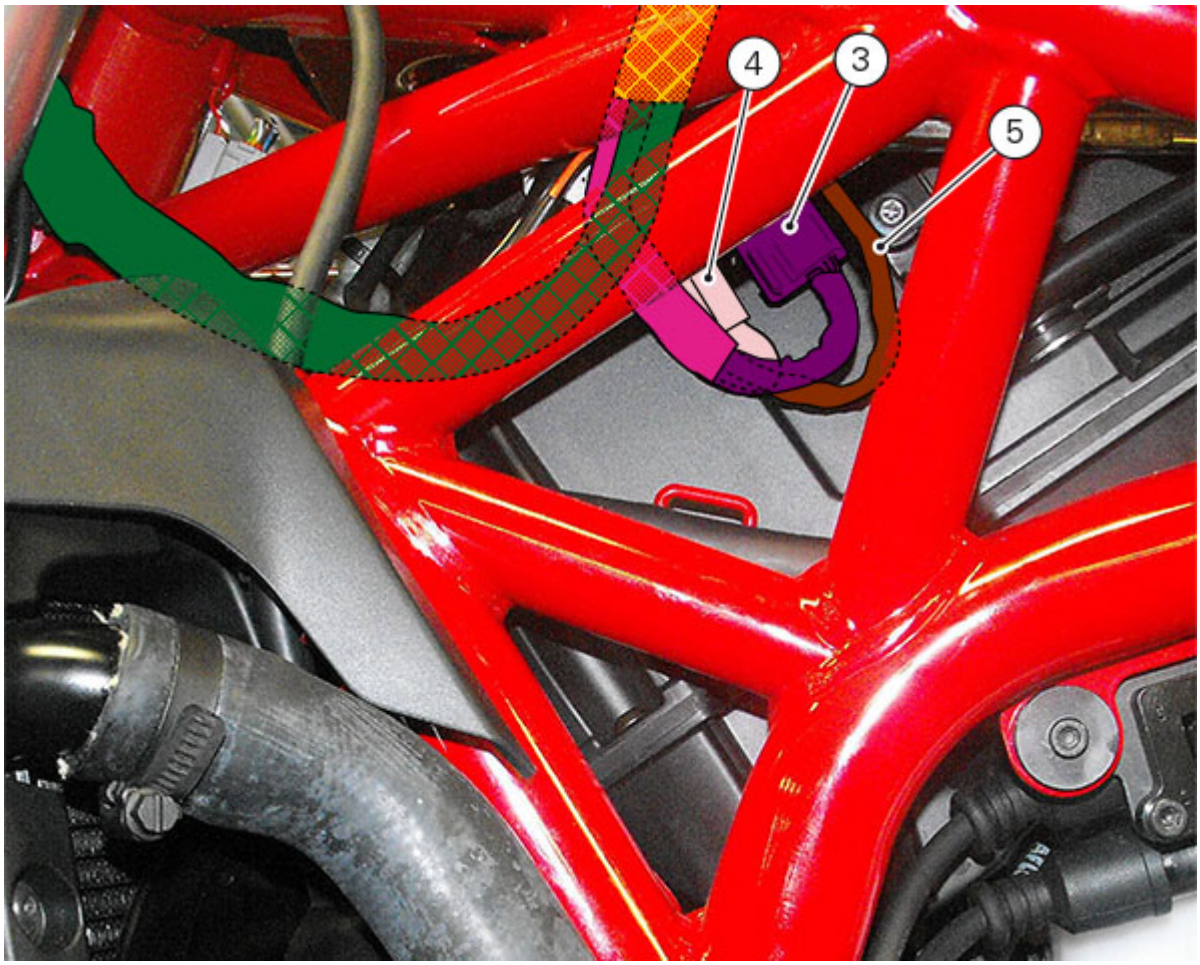
4
3
5

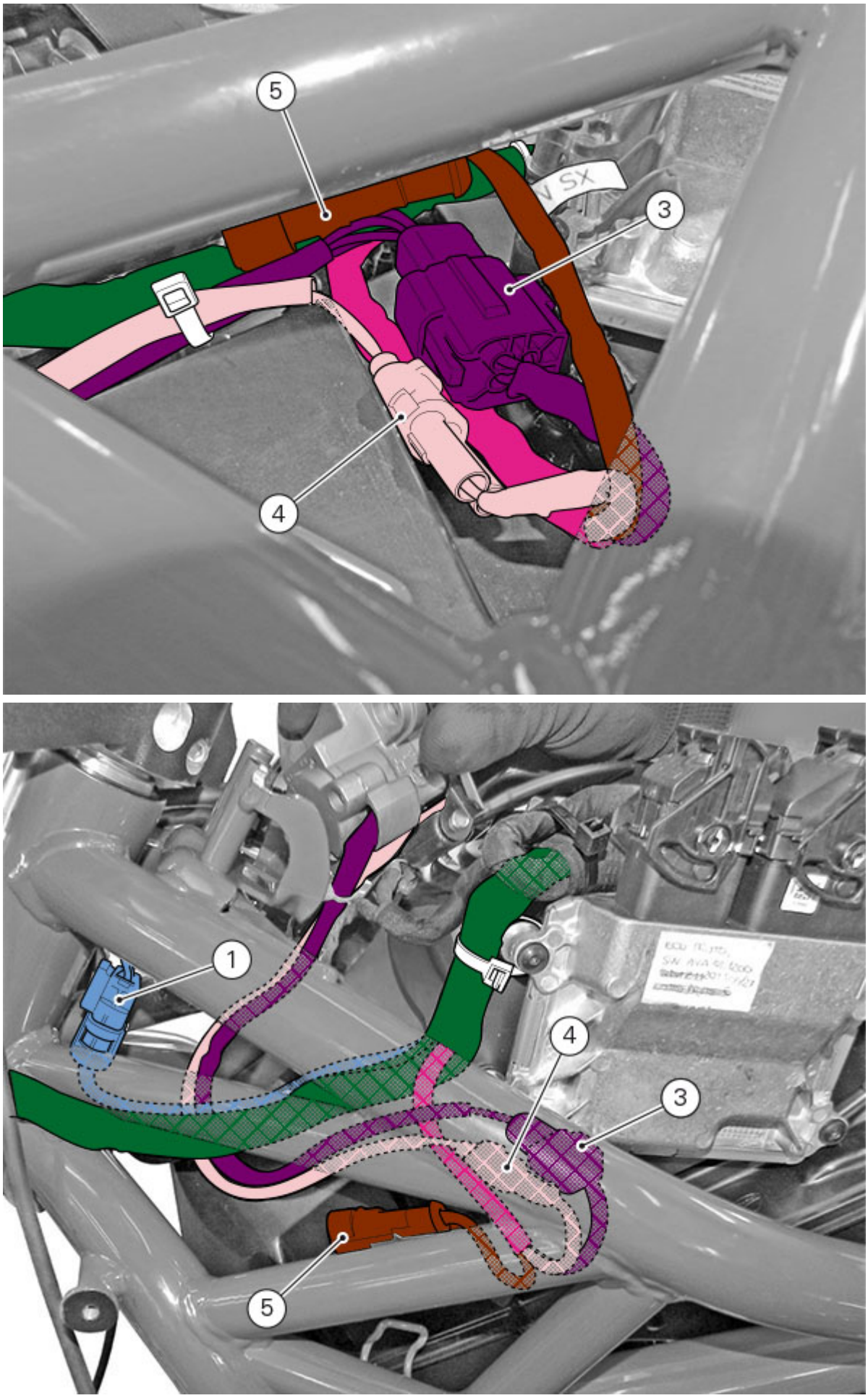

General key and "Routing wiring on frame".

Branch 1

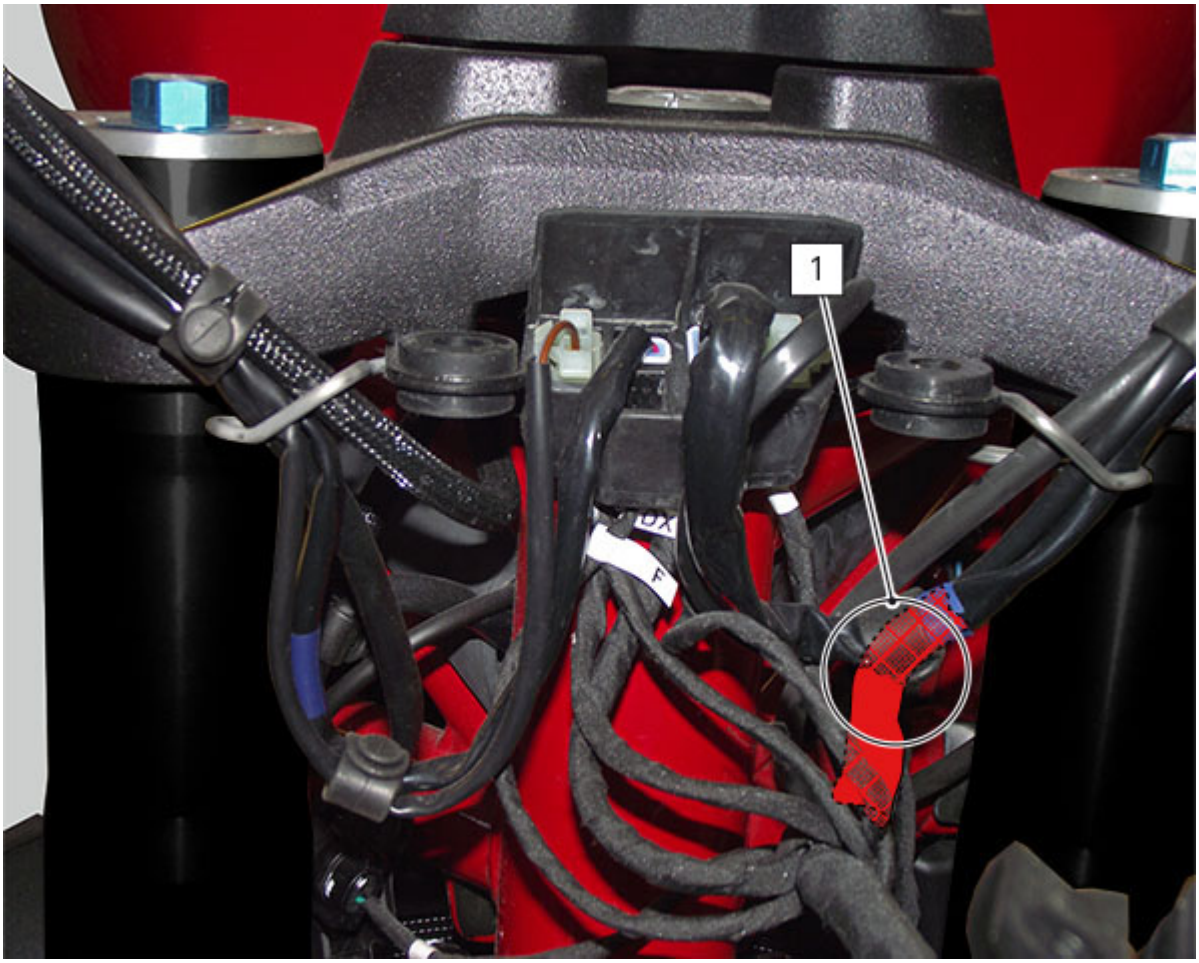

Table 1A

Pos.	DESCRIPTION
1	Instrument panel wiring branch
2	Instrument panel air temperature sensor cable
3	LH switch cable
4	Front left turn indicator cable
5	Clutch switch cable
6	Front stop switch cable
7	Front right turn indicator
8	RH switch cable
9	Headlight cable

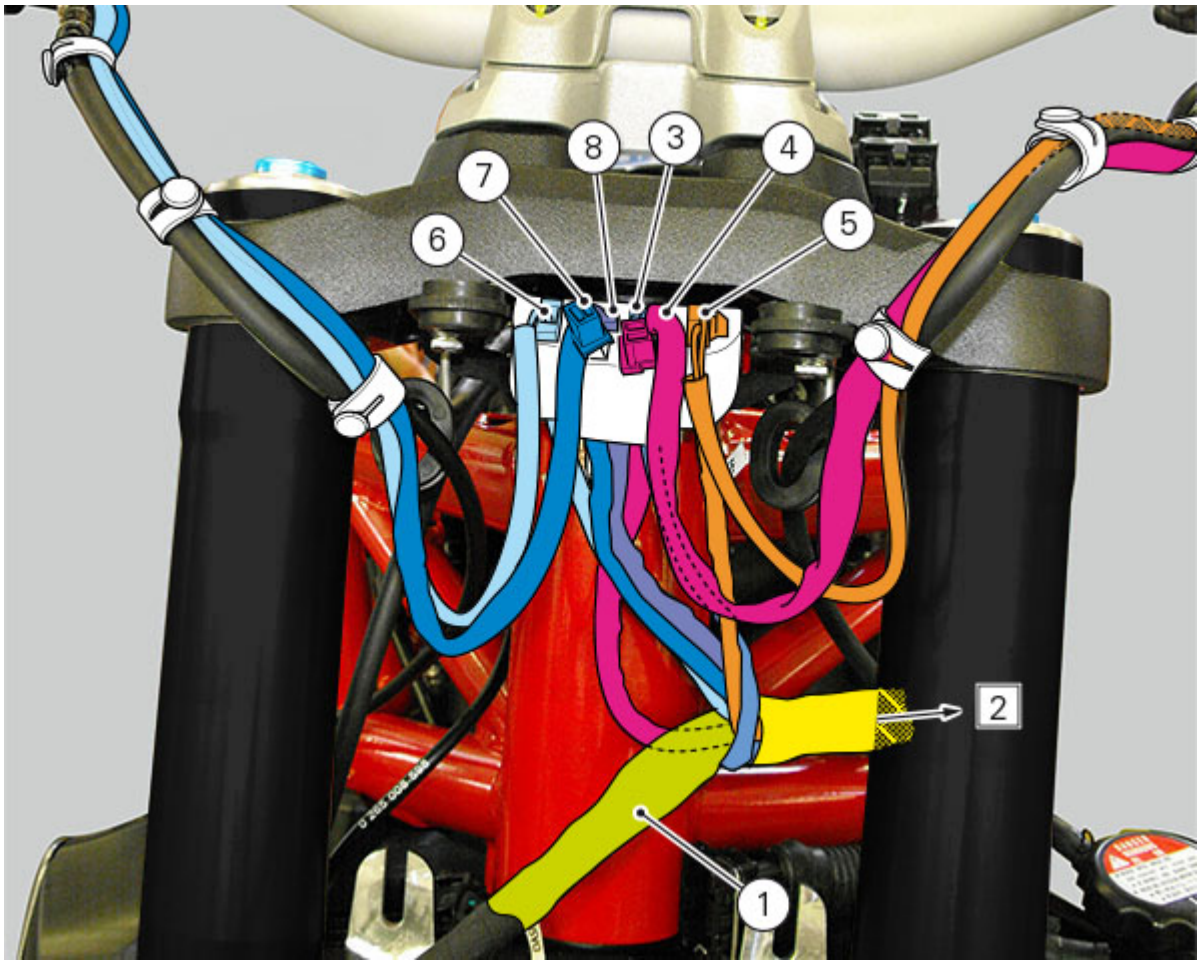
8
3
4
7
5
6
2
1

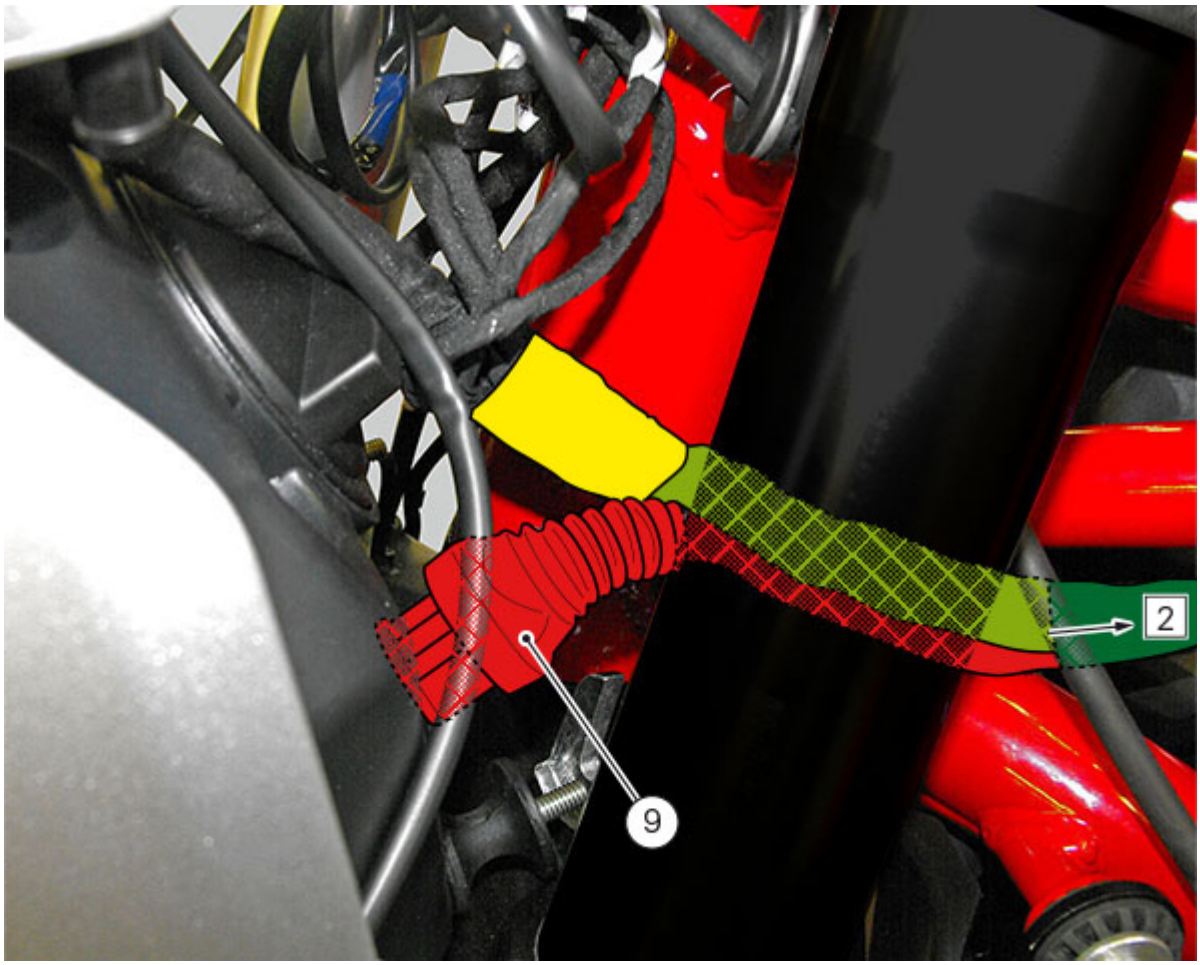
2
9

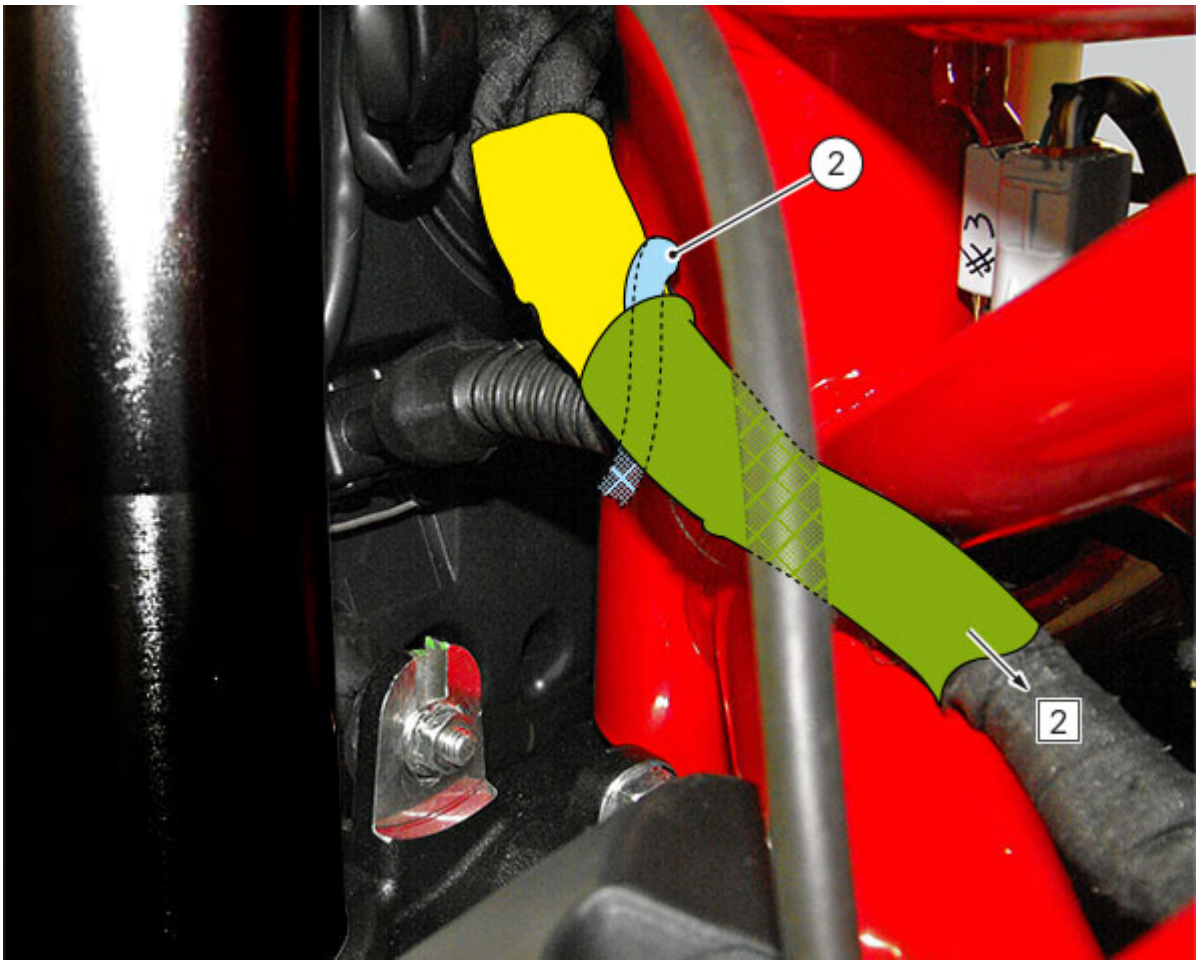

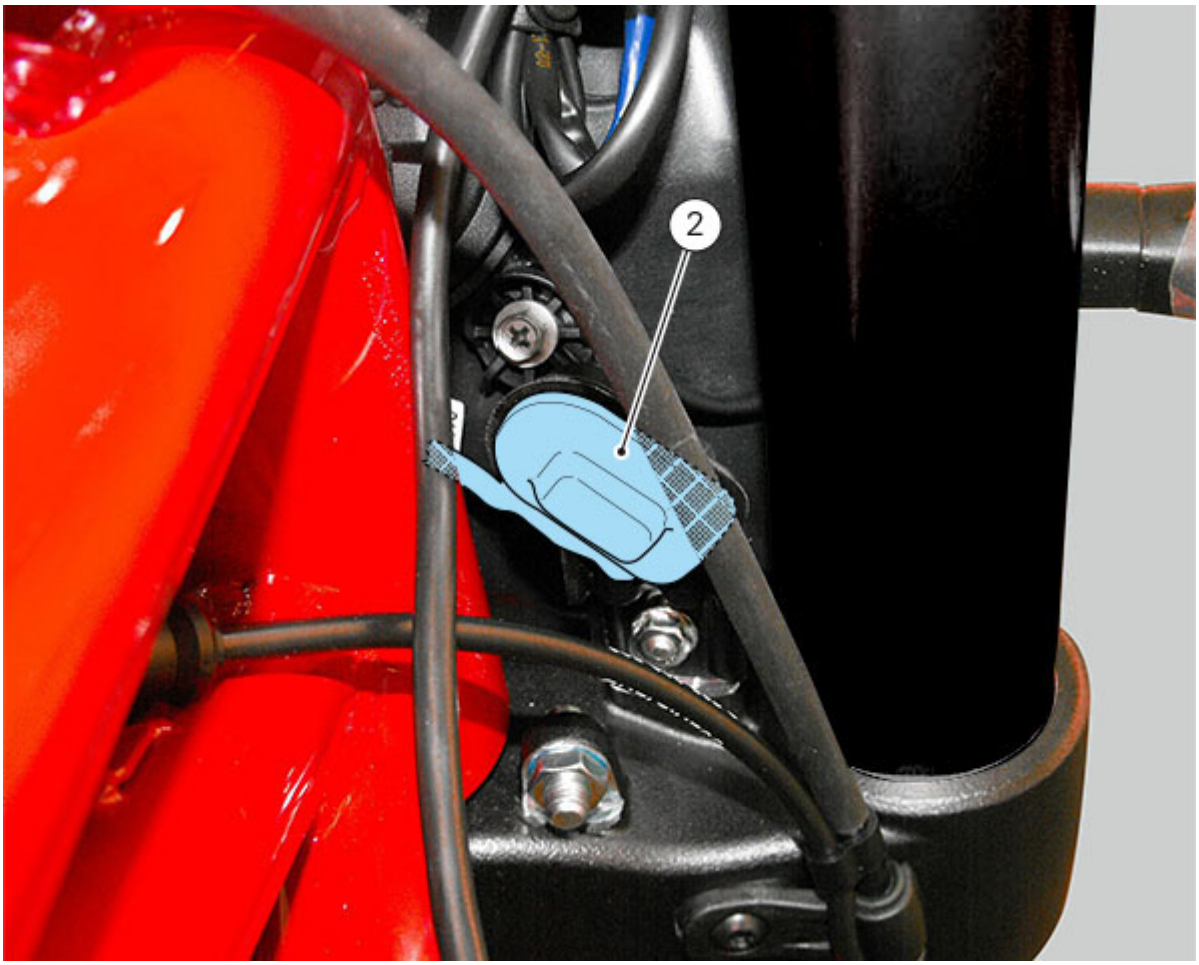

General key and "Routing wiring on frame".

Routing of wiring on frame

BRANCHES

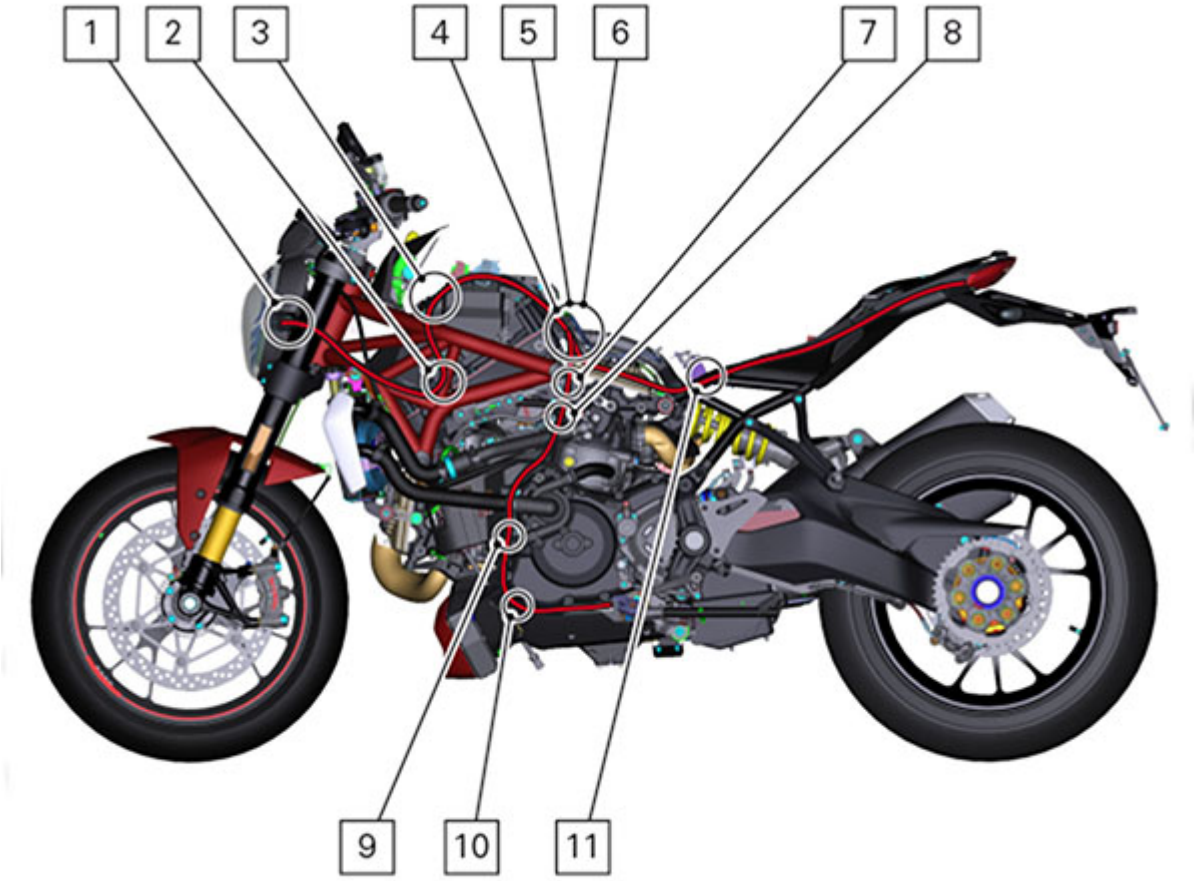

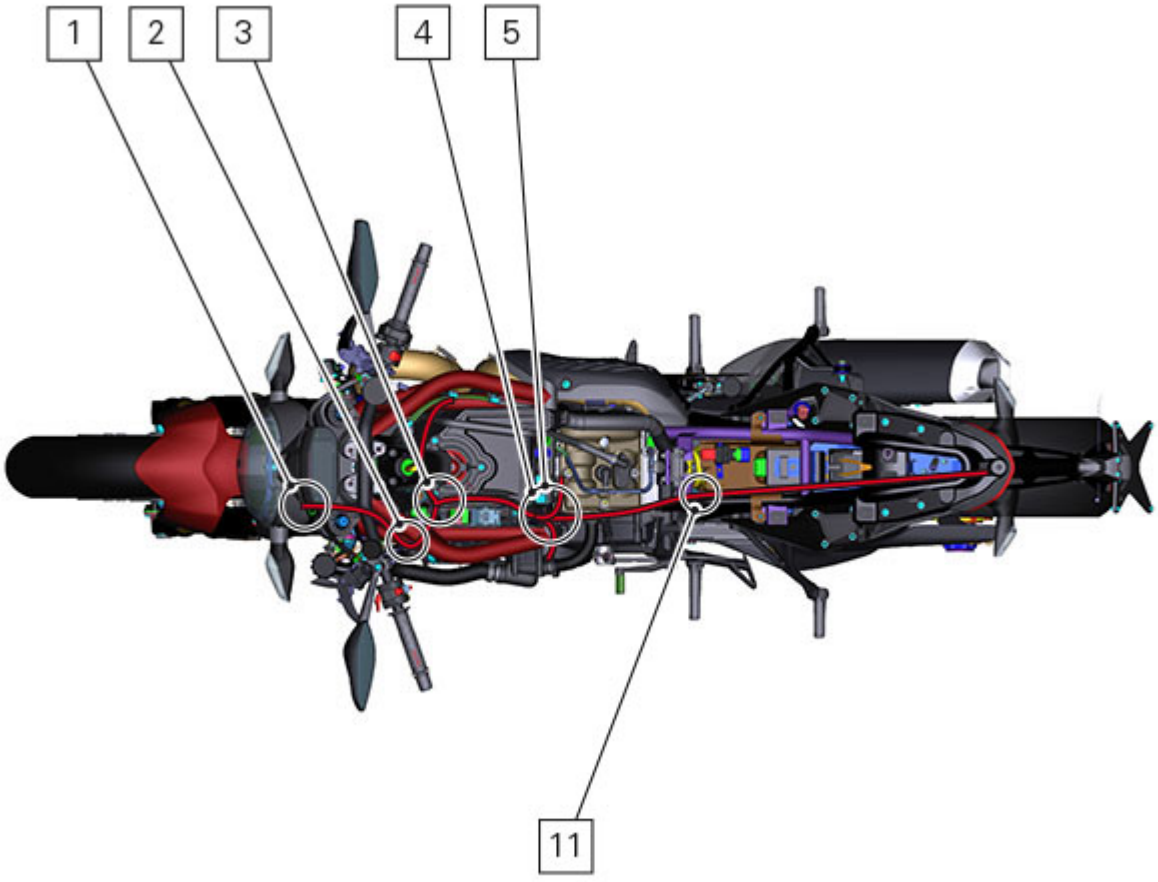

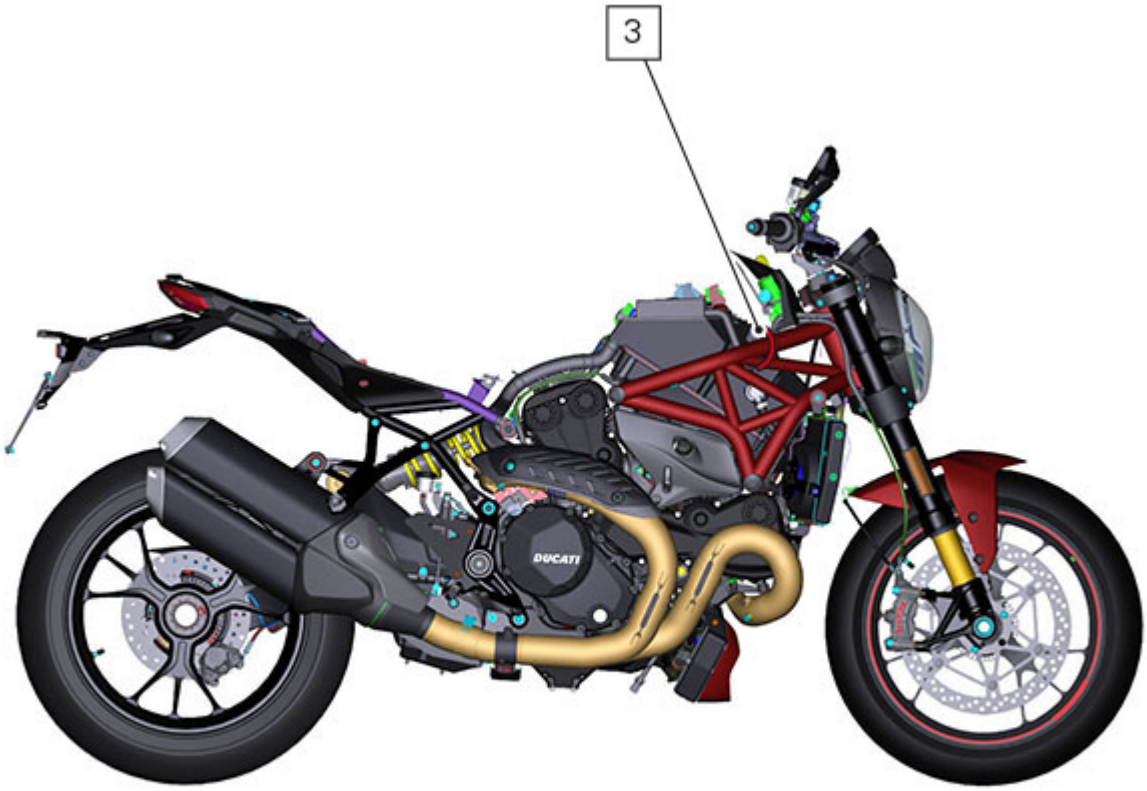

Position main wiring as shown in the figure.
Take care to correctly fasten all parts with ties or cable rings.

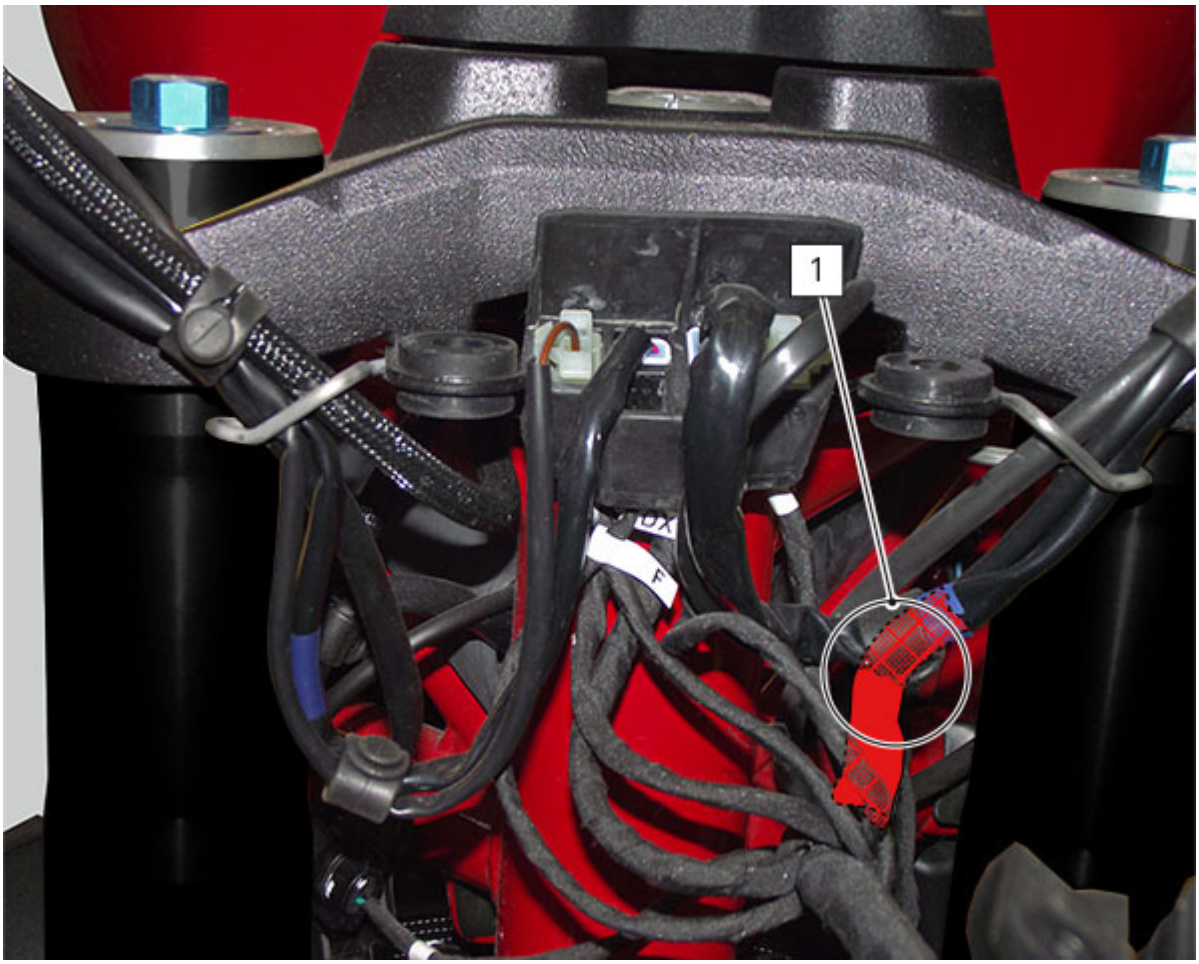

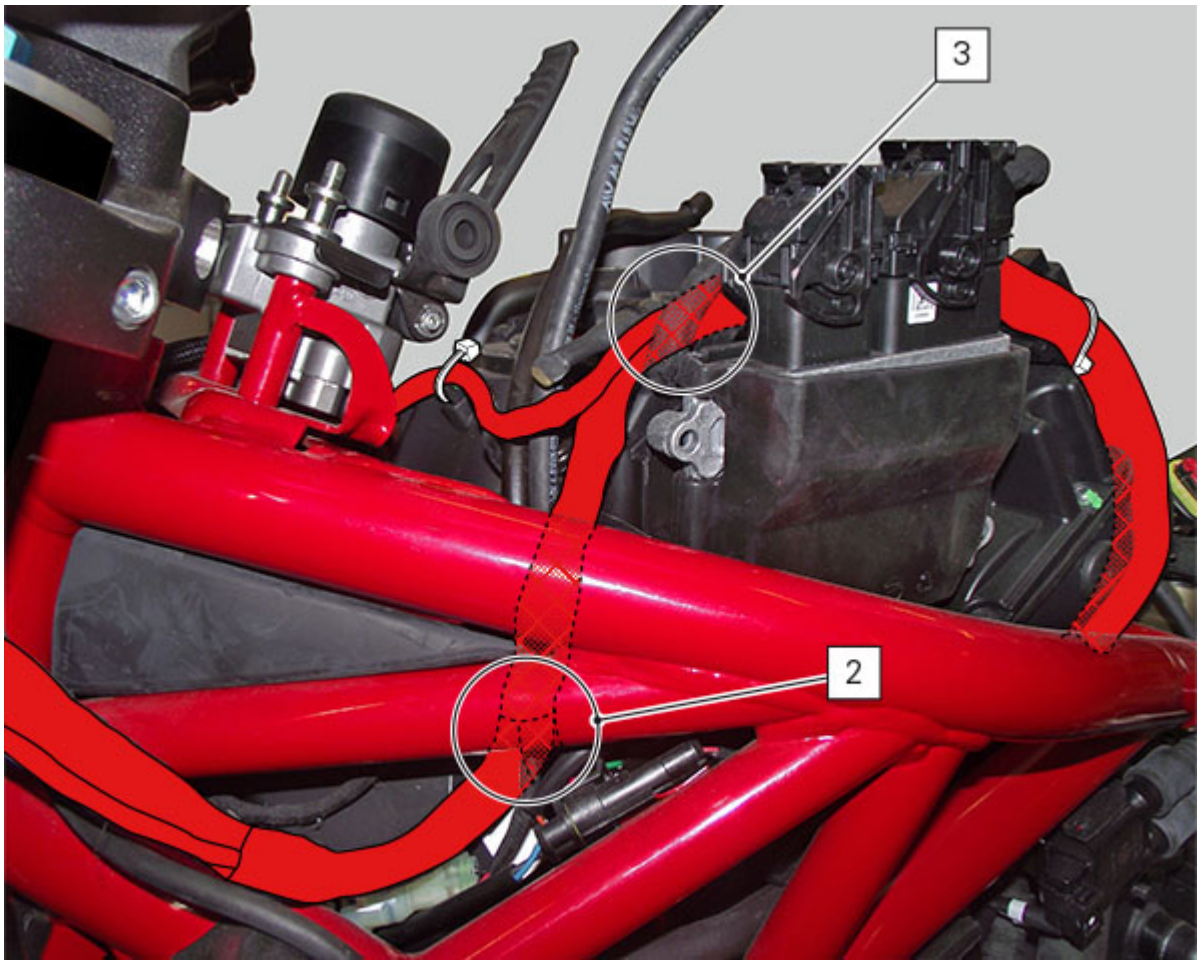
3
2

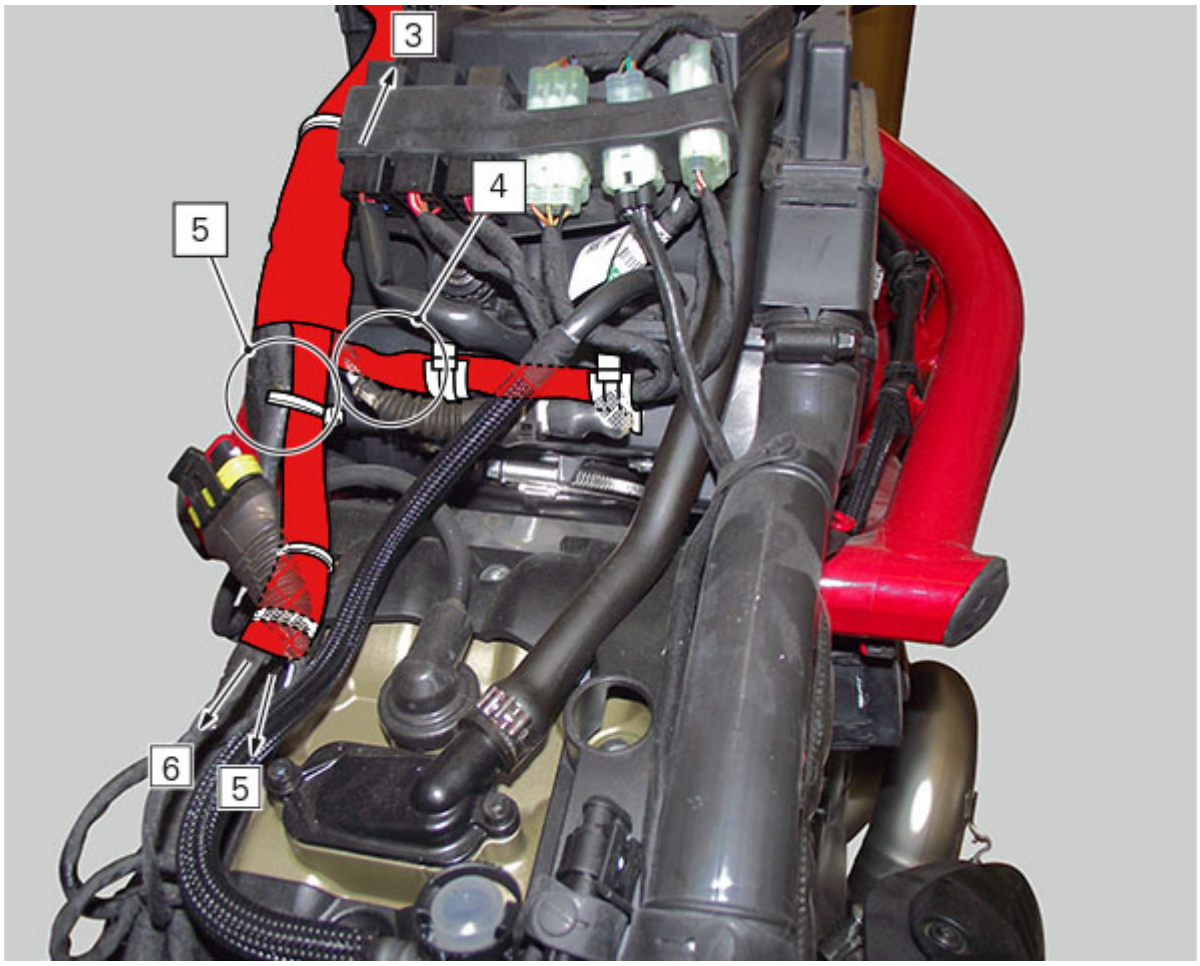
3
4
5
6
5

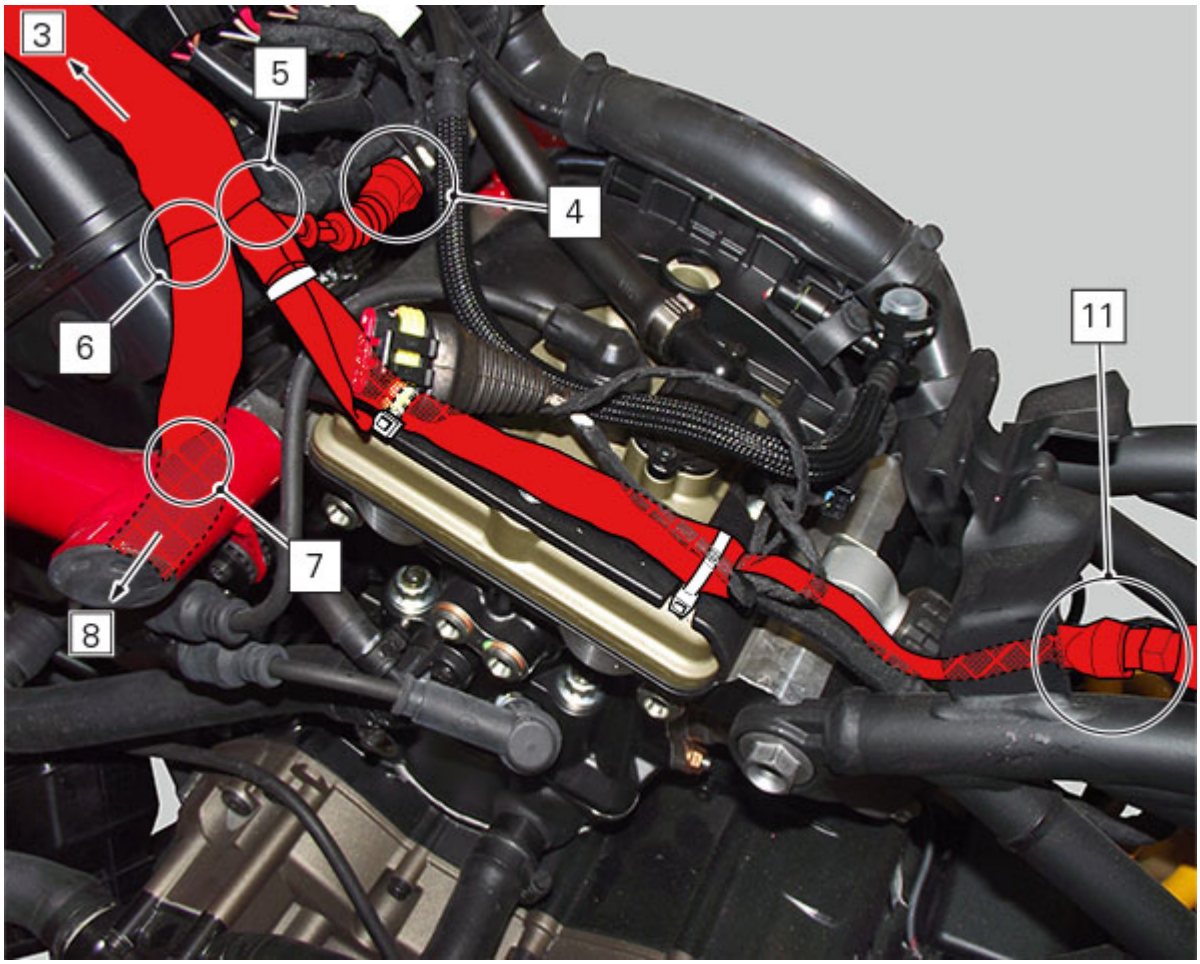
3
5
4
6
11
7
8

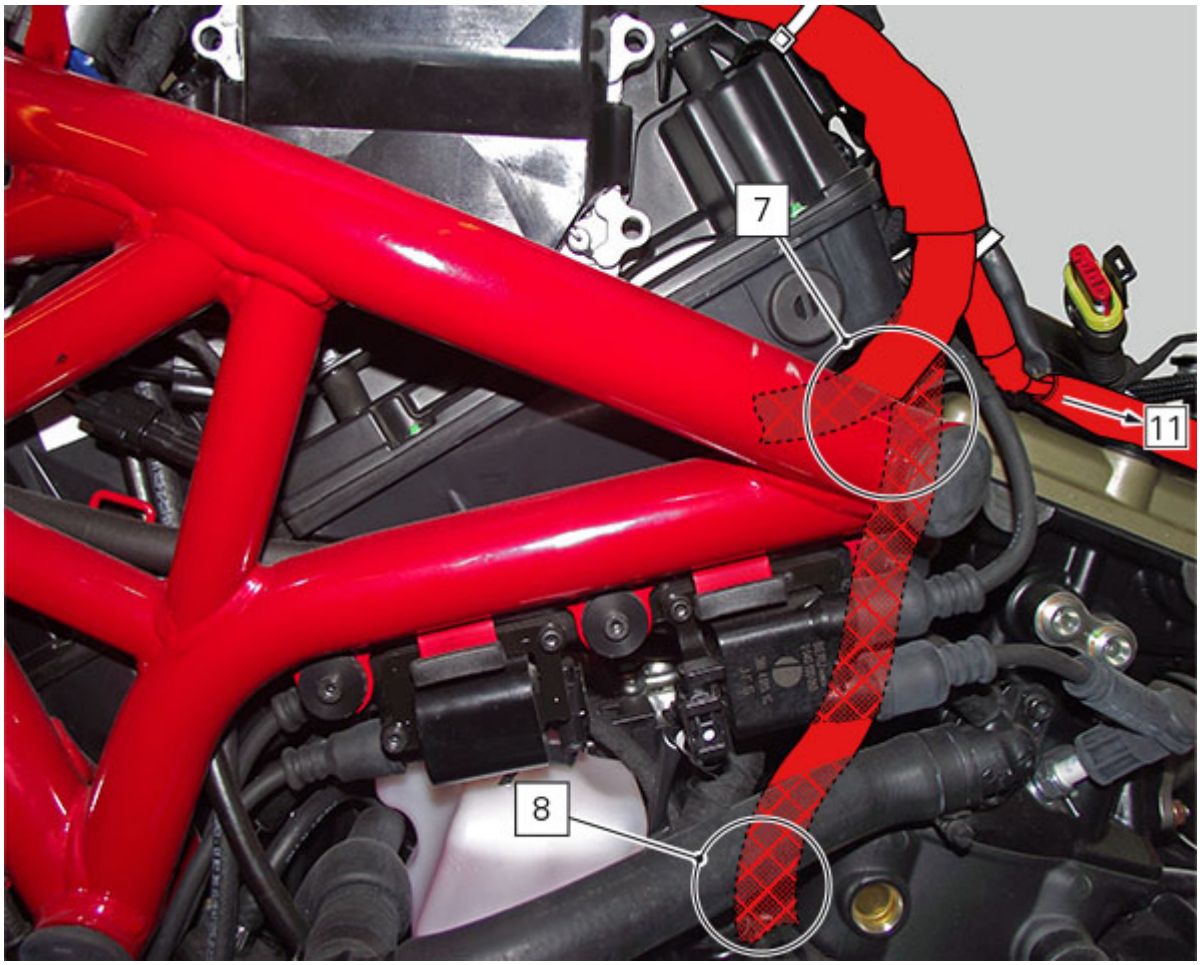
7
11
8

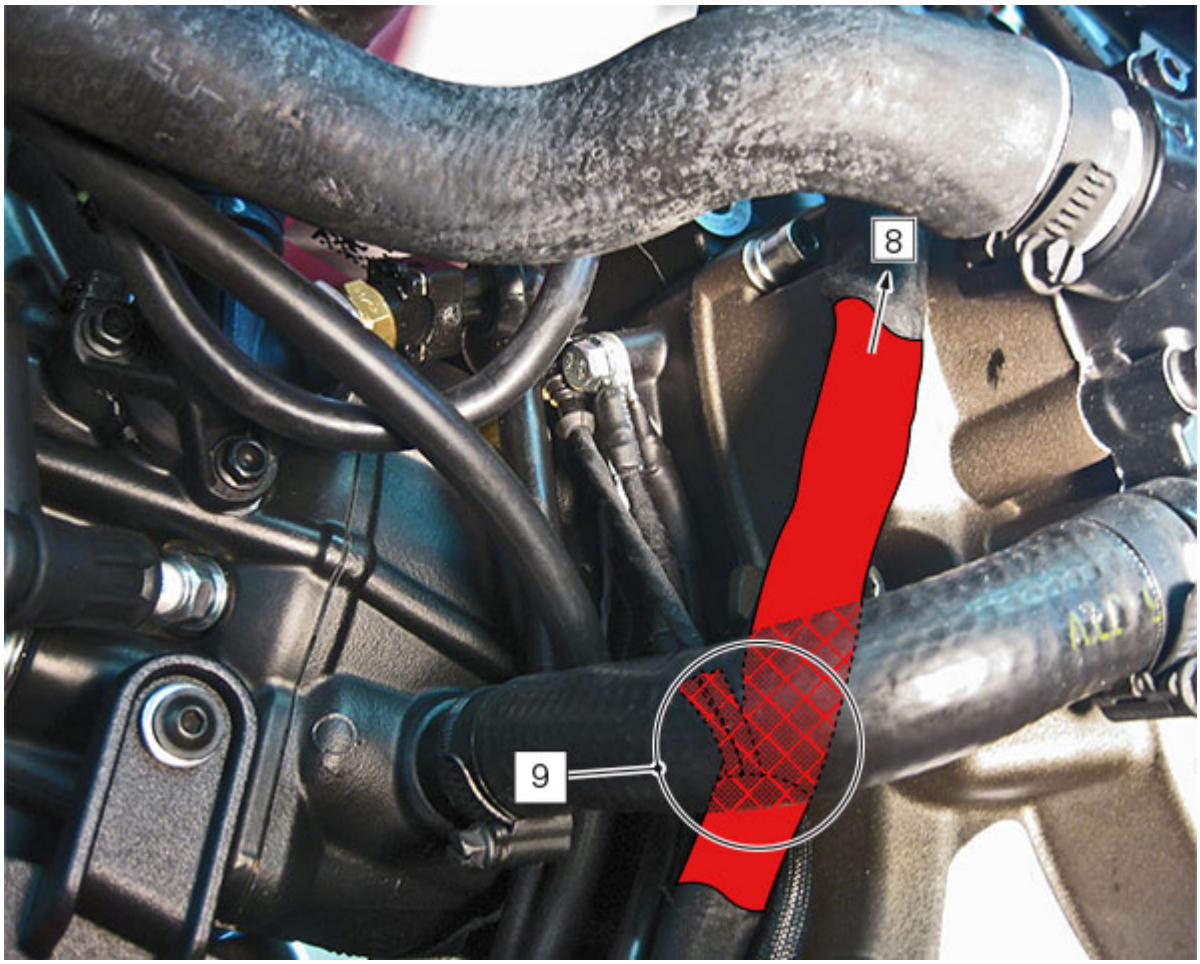

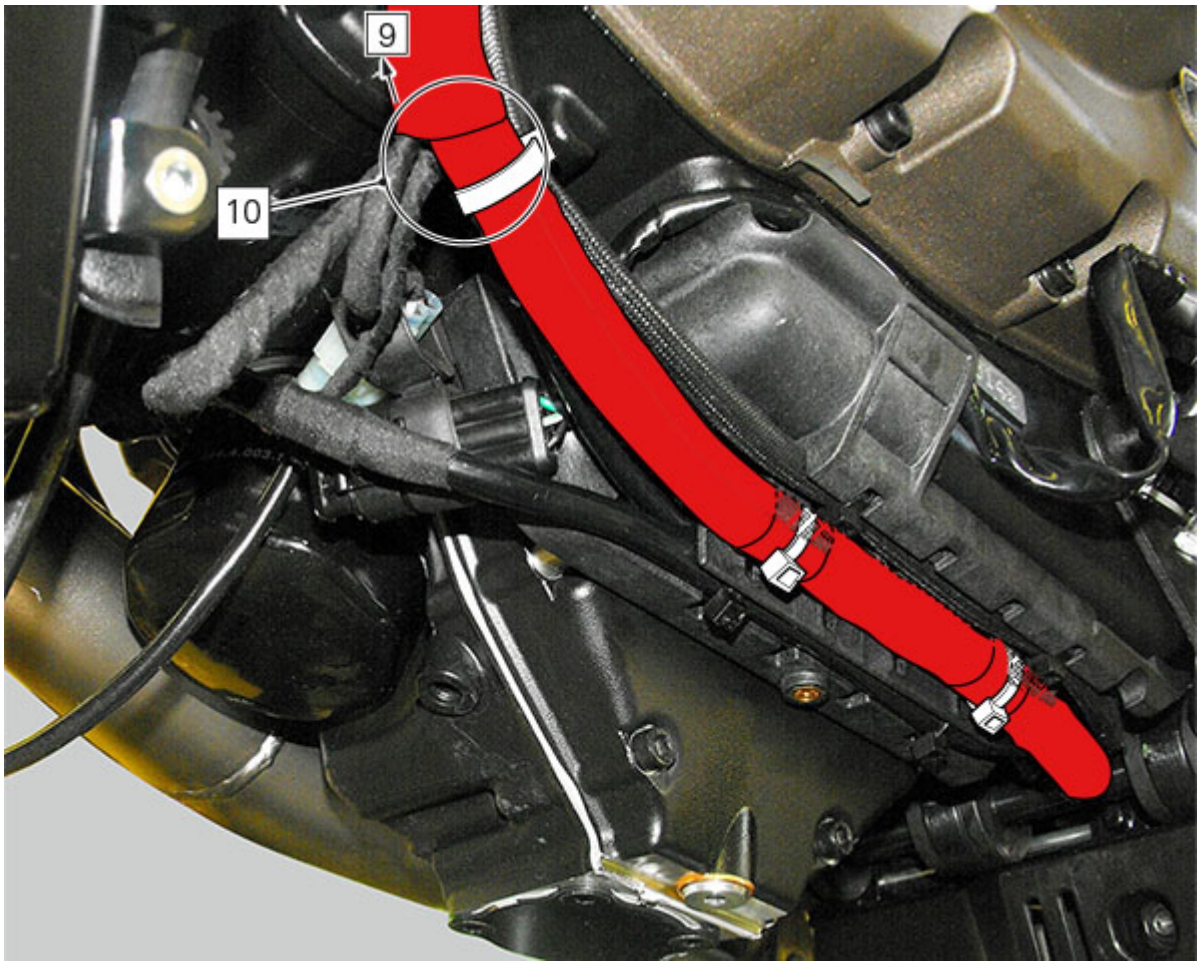

BRANCH KEY

BRANCHES	DESCRIPTION

Branch 1	Instrument panel wiring branch
	Instrument panel air temperature sensor cable
	LH switch cable
	Front left turn indicator cable
	Clutch switch cable
	Front stop switch cable
	Front right turn indicator
	RH switch cable
	Headlight cable
Branch 2	Throttle twistgrip position sensor (APS) cable
	Optional presetting cable
	Key switch cable
	Immobilizer cable
	LH fan cable
Branch 3	Ambient temperature sensor cable
	Secondary air system connector cable
	Front speed sensor cable
	RH fan cable
	ECU 1 connection cable wiring
	ECU 2 connection cable wiring
Branch 4	Fuel pump relay cable)
	Injection load relay cable
	Starter relay cable
	Vertical oxygen sensor cable
	Injection wiring 1
	Injection wiring 2
	Injector 1 cable
	Injector 2 cable
	Potentiometer motor / ride-by-wire (TPS/ETV) cable
Branch 5	BBS wiring cable
	Rear wiring (Branch 11)

	Fuel pump cable
	Rear speed sensor cable
	Rear stop switch cable
	Fuel tank ground
Branch 6	Anti-theft system cable (optional)
	Central wiring (Branch 7)
Branch 7	Front fuse box wiring
	Rear fuse box wiring
	MAP sensor cable
	ABS control unit connection wiring
Branch 8	Purge valve connection cable
	Rpm (pick-up) sensor connection cable
	Horizontal head coil connection cable
	Vertical head coil connection cable
Branch 9	Ground
	Ground - battery negative cable
	Water temperature sensor
Branch 10	Horn
	Oil pressure switch
	Side stand
	Horizontal exhaust oxygen sensor
	Voltage regulator
	Exhaust valve motor
	Fuse box 2
	Fuse box 1
	ABS positive
	Solenoid starter
	Gear sensor
	Battery positive — Remote control switch cable
	Remote control switch - Starter motor cable
	Regulator-generator cable
	Battery negative cable

Branch 11	Rear wiring connector
	Self-diagnosis
	Tail light
	Rear left turn indicator
	Rear right turn indicator
	Number plate light connector

Injection /electric system diagram key

1) Ignition system (ignition switch)
2) LH fan
3) RH fan
4) Generator
5) Regulator
6) Solenoid starter
7) Battery
8) Wiring ground
9) Exhaust valve motor
10) ABS control unit
11) Front fuse box
12) Rear fuse box
13) Front speed sensor
14) Rear speed sensor
15) Self-diagnosis/DDA
16) Rear right turn indicator
17) Tail light
18) Rear left turn indicator
19) Number plate light
20) BBS
21) Alarm (optional)
22) Oil pressure sensor
23) Gear sensor
24) Side stand switch
25) Clutch switch
26) Timing/rpm sensor
27) MAP sensor
28) Engine temperature
29) Ambient air temperature sensor (TIA)
30) Horizontal exhaust lambda sensor
31) Vertical exhaust lambda sensor
32) Throttle twistgrip position sensor (APS)
33) Horizontal injector
34) Vertical injector
35) Potentiometer motor / ride-by-wire (TPS/ ETV)
36) Secondary air actuator
37) Vertical coil
38) Horizontal coil
39) Fuel pump
40) Fuel pump relay
41) Injection power supply relay
42) Control unit 2
43) Control unit 1
44) Left-hand switch
45) Front left turn indicator
46) Horn
47) Air temperature sensor
48) Instrument panel
49) Rear stop light
50) Front stop light
51) Front right turn indicator
52) Headlight
53) Right-hand switch
54) Starter relay
55) Heated handgrip power supply
56) ABS fuses
57) Immobilizer
58) Starter motor
59) Purge Valve

Wire colour coding

B Blue
W White
V Violet
Bk Black
Y Yellow
R Red
Lb Light blue
Gr Grey
G Green
Bn Brown
O Orange
P Pink

Technological Dictionary

Riding Mode

The rider can choose from 3 different preset bike configurations (Riding Modes) and pick the one that best suits his/her riding style or ground conditions. The Riding Modes allow user to instantly change the engine power delivery (Power Mode), ABS, DTC settings and instrument panel graphics.
Available Riding Modes: Sport, Touring and Urban. Within every Riding Mode, the rider can customise any settings.

Power Mode

The Power Modes are the different engine maps the rider can select to change power level and delivery to suit his/her own riding style and surface conditions.
There are three Power Modes, one for each Riding Mode:

- LOW, with 'soft' power delivery;
- MED, with 'soft' power delivery;
- HIGH, with 'instant' power delivery.

Ride by Wire (RbW)

The Ride by Wire system is the electronic device that controls throttle opening and closing. Since there is no mechanical connection between the throttle twistgrip and the throttle bodies, the ECU can adjust power delivery by directly affecting throttle opening angle.
The Ride by Wire system allows you to obtain different power level and delivery according to the selected Riding Mode (Power Mode), but even to accurately control the engine brake (EBC), thereby helping to control the rear wheel slipping (DTC).

Ducati Traction Control (DTC)

The Ducati Traction Control system (DTC) supervises the rear wheel slipping control and settings vary through eight different levels that are programmed to offer a different tolerance level to rear wheel slipping. Each Riding Mode features a pre-set intervention level.
Level eight indicates system intervention whenever a slight slipping is detected, while level one is for very expert riders because it is less sensitive to slipping and intervention is hence softer.

Anti-lock Braking System (ABS) 9.1MP

ABS 9ME system is a two-channel latest-generation system that actuates combined braking with anti lift-up function for the rear wheel so as to guarantee not only a reduced stopping distance, but also a higher stability under braking.
The system features 3 levels, one associated to each Riding Mode.

Ducati Data Analyzer+ (DDA+)

DDA+ is the latest generation of the Ducati Data Analyzer, with built-in GPS signal to create a "virtual finish line". The system automatically detects lap end and stops the lap timer, without the rider needing to do anything. Thanks to the built-in GPS signal, it also shows the trajectories on track map and the key motorcycle parameters: throttle opening, speed, rpm, gear engaged, engine temperature, DTC intervention.

Acronyms and abbreviations used in the manual

ABS
Antilock Braking System
BBS
Black Box System
CAN
Controller Area Network
DDA
DUCATI Data Acquisition
DSB
Dashboard
DTC
DUCATI Traction Control
ECU
Engine Control Unit
E-LOCK
Electronic Main Switch Set
GPS
Global Positioning System

Rectifier-regulator

Regulator (1) is located inside the wiring support (2) under the electrical components compartment.
The generator used has a rated power of 490W at 14V and consists of a fixed element (stator/generator), located in the generator cover and a mobile element (rotor/flywheel) fastened to the crankshaft.

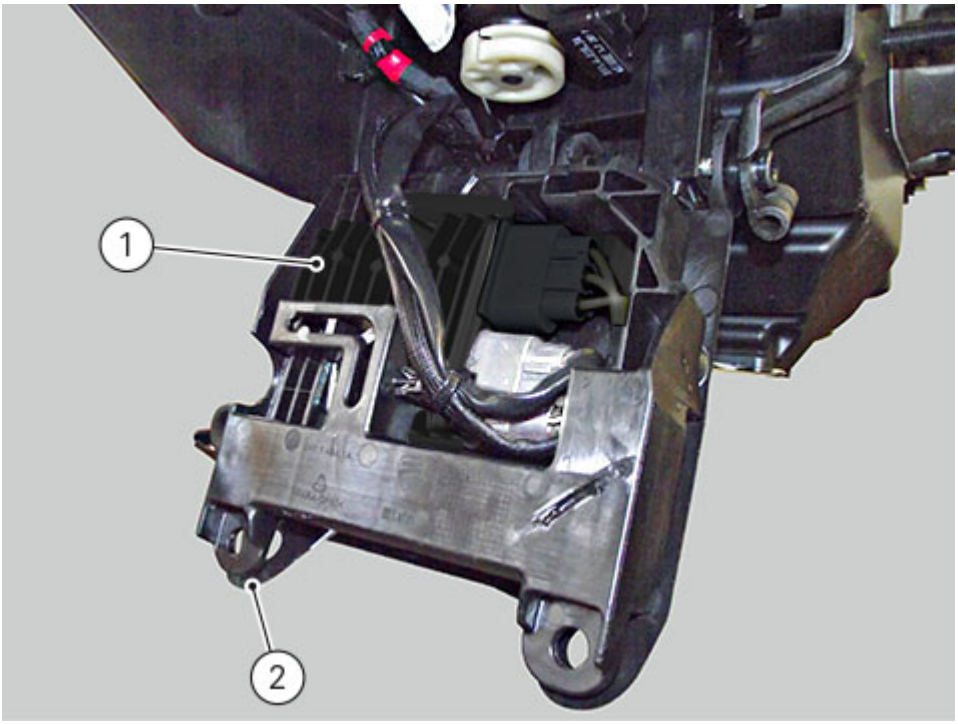

The rectifier/regulator consists of an aluminium casing containing the diodes that rectify the current produced by the generator. It also contains an electronic device that regulates the current supplied by the generator in accordance with battery voltage.
If the battery is drained, the current has the value necessary to restore optimum operating conditions of the battery itself.
While, if the battery is fully charged, the current value will be lower.

Important
Check the charging current by using the "DDS" diagnosis instrument.

Removing the regulator
To remove the regulator, see the procedure explained in chapter "Removing the electric components compartment".

Important
Do not disconnect the battery cables when engine is running because this would cause irreparable damage to the regulator.

Refitting the regulator
To install the regulator on the vehicle, see the procedure explained in chapter "Refitting the electrical components compartment".

REGULATOR FUSE
The regulator fuse (3) of 30 A is located inside solenoid starter (A), in the battery compartment and protects the electronic regulator.

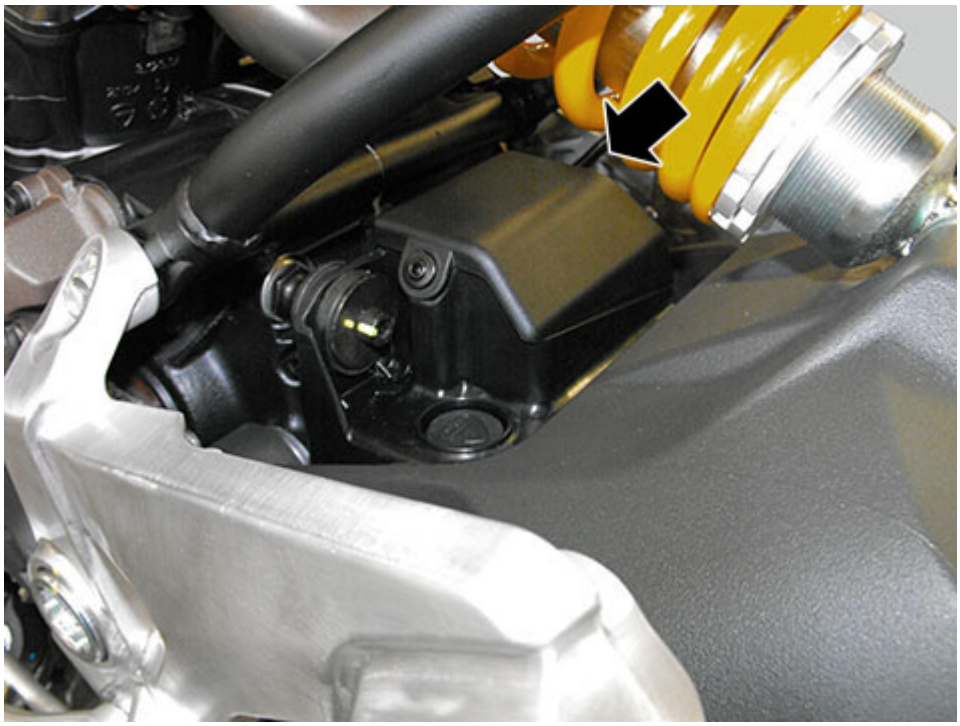

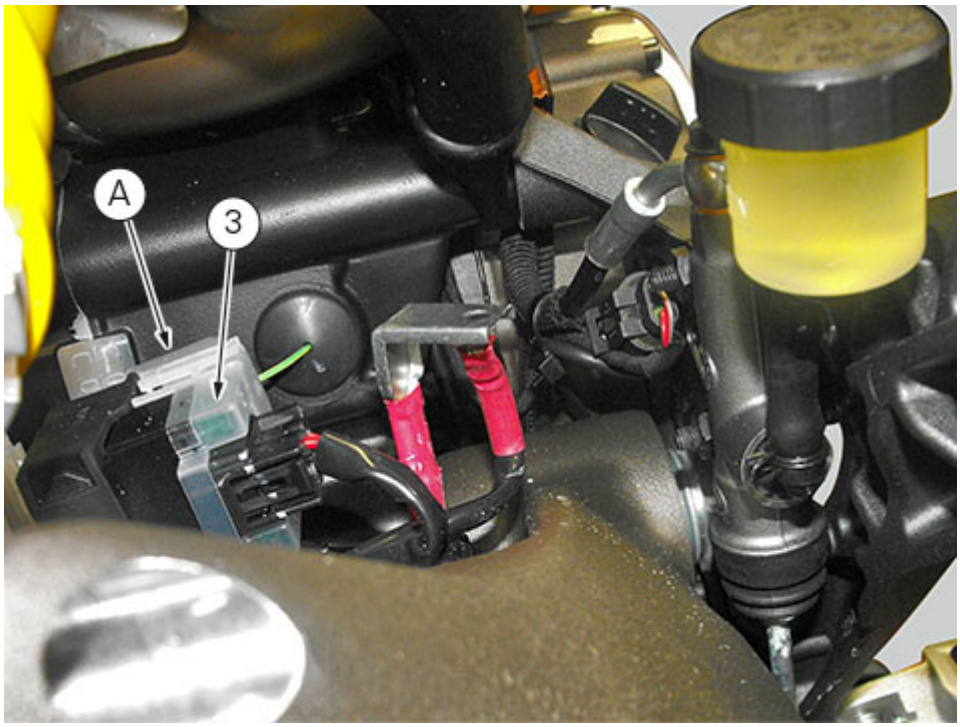

A blown fuse can be identified by breakage of the inner filament (B).

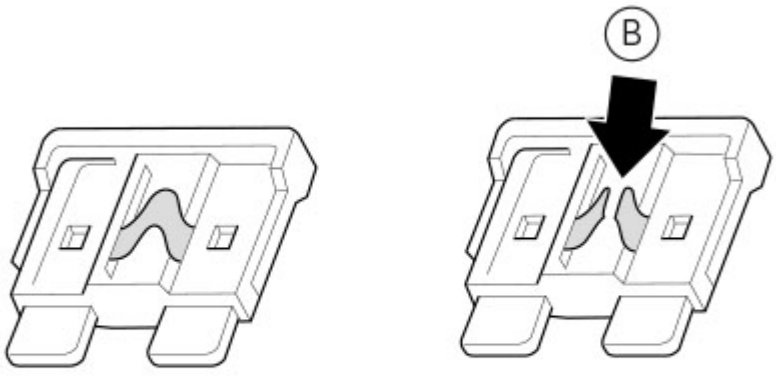

Important

Switch the ignition key to OFF before replacing the fuse to avoid possible short-circuits.

Warning

Never use a fuse with a rating other than the specified value. Failure to observe this rule may damage the electric system or even cause fire.

To access the regulator fuse, see paragraph "Solenoid starter".

Alternator / Generator

The generator used has a rated power of 490W at 14V and consists of a fixed element (stator/generator, A), located in the generator cover and a mobile element (rotor/flywheel, B) fastened to the crankshaft.

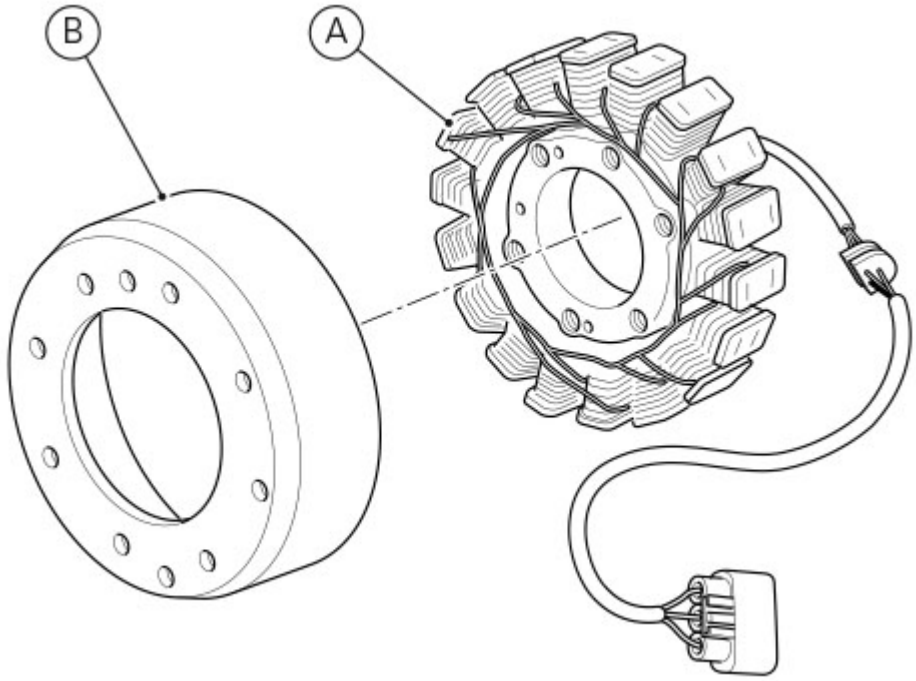

Rotor (B) is manufactured with strong permanent magnets and features a lot of pin pairs for each stator phase. This allows generating alternate voltage at a higher frequency compared to a standard generator. The result: at low rpm it is possible to generate higher current.

Important
Check the charging current by using the "DDS" diagnosis instrument.

To check the generator, measure the voltage at each end of the generator cable and check if it is compliant with the value indicated in the table (ambient temperature: 20°C).

Attention
Before testing, disconnect the generator wiring from the electrical system when the ignition key is set to OFF.

Rpm	Active voltage	Minimum voltage	Maximum voltage
1500 rpm	29.8 V	18.9 V	24.5 V
2500 rpm	34.3 V	31.4 V	40.4 V

Values significantly lower than those indicated above can be due to:
- partially demagnetised rotor;
- short-circuited windings.

In the above cases the whole generator assembly (rotor and stator) should be replaced.
If checks have a favourable outcome, reconnect the generator to the regulator with ignition key on OFF. Make sure that no cables are damaged or disconnected.

Removing the generator

Drain the engine oil (Changing the engine oil and filter cartridge).
Remove the front sprocket cover (Removing the front sprocket cover).
Slide out the gearchange mechanism (Removing the gear shift).
Drain the cooling system and release the case from the pipes (Removing the cooling system hoses and unions).

Remove the generator cover (Removing the generator cover), the stator (A) (Disassembling the generator cover) and the rotor (B) (Removing the flywheel/generator assembly).

Refitting the generator

Fit the rotor (B), the stator (A) (Fitting the flywheel/generator assembly) and the generator cover (Fitting the generator cover).
Refit the cooling system pipes (Refitting the cooling system hoses and unions) and restore the fluid level.
Refit the gearchange mechanism in its seat (Refitting the gear shift).
Refit the front sprocket cover (Refitting the front sprocket cover).
Restore the engine oil level (Changing the engine oil and filter cartridge).

Refitting the battery

Fit the positive cable (17) and ABS positive cable (11) on battery positive pole and fasten it by tightening screw (18) to 10Nm±10%.

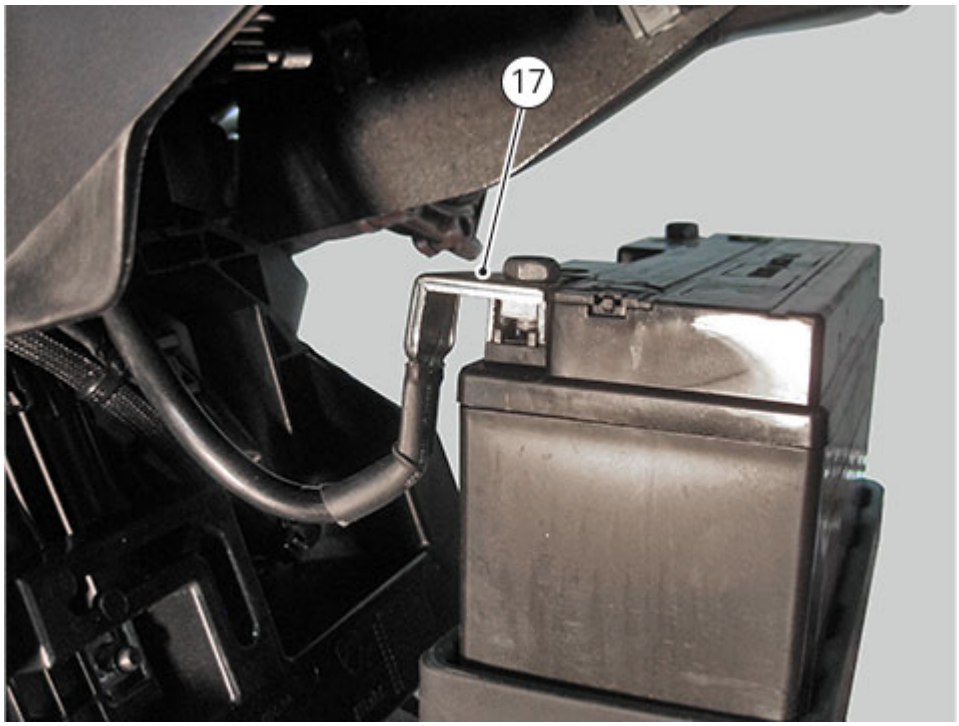

Install battery (16) in its seat, from swinging arm bottom side. Once battery (16) is in place, fit service pin (P) in the hole on electric components support (Q) to support the battery.
Raise the battery mount cover (13) until it gets against the battery.

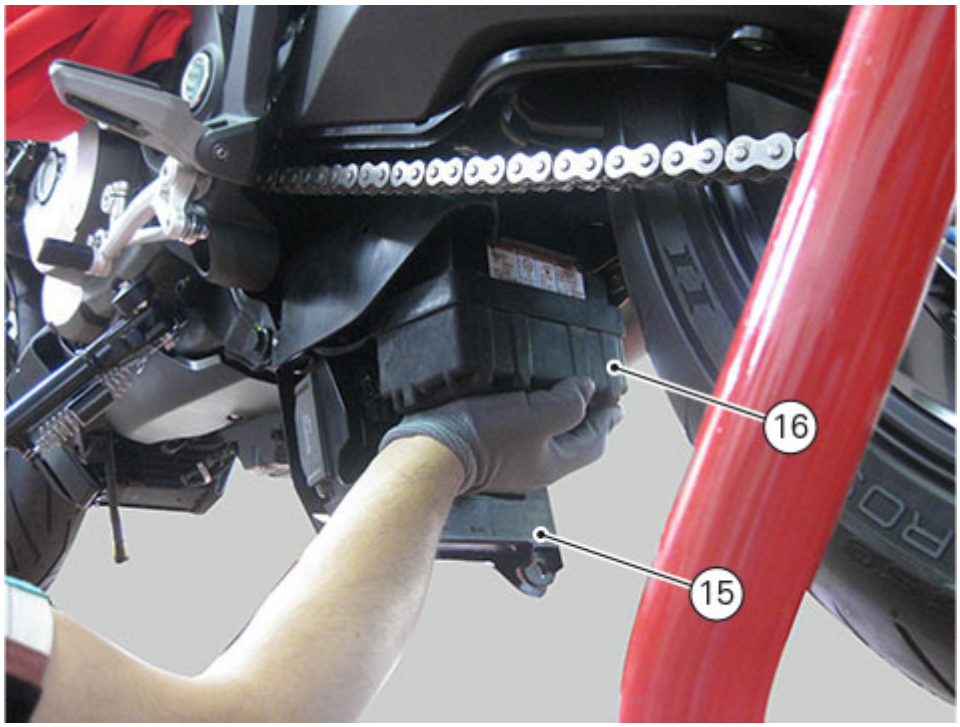

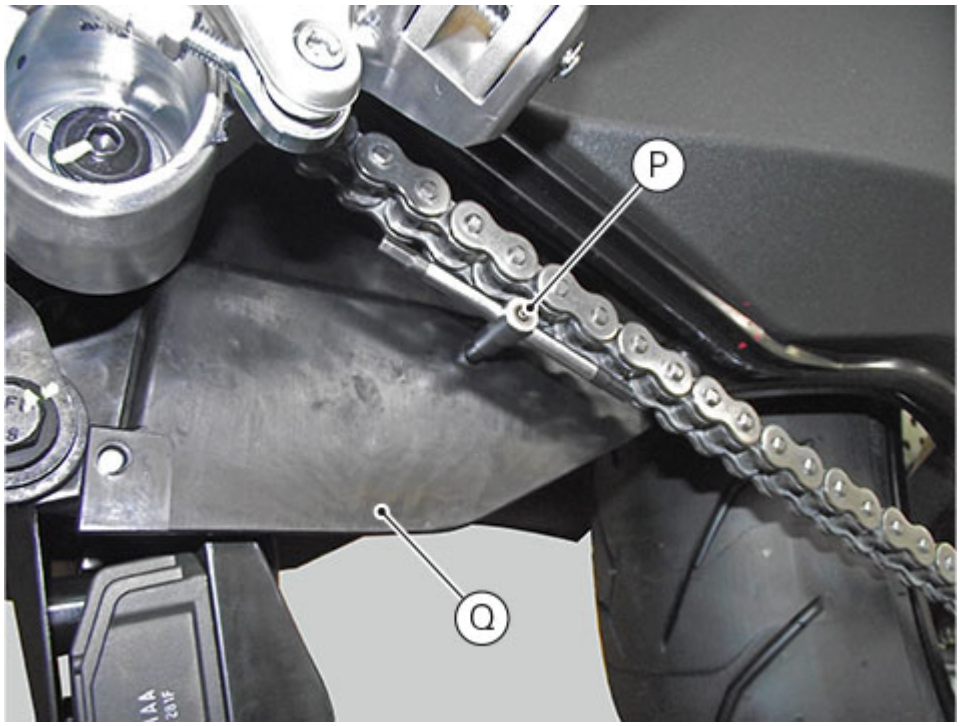

Slide out pin (P) and fasten battery mount cover (15) using screws (14) with relevant lower spacers; tightening them to a torque of 5Nm±10%.

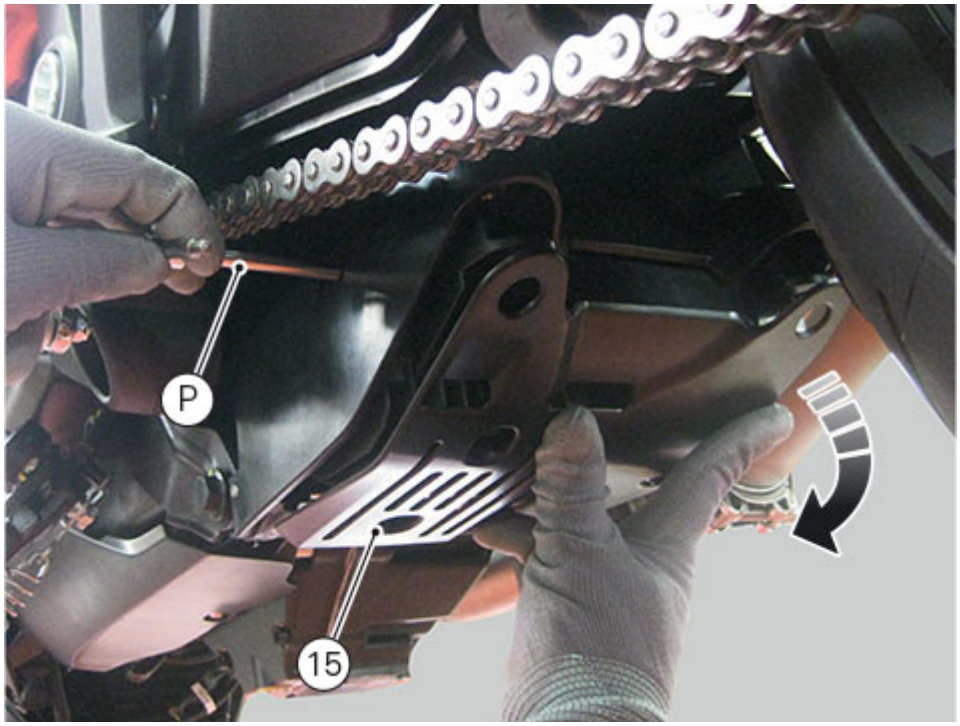

Fit the positive cable (12) and ABS positive cable (13) on battery positive pole and fasten it by tightening screw (11) to 10Nm±10%.

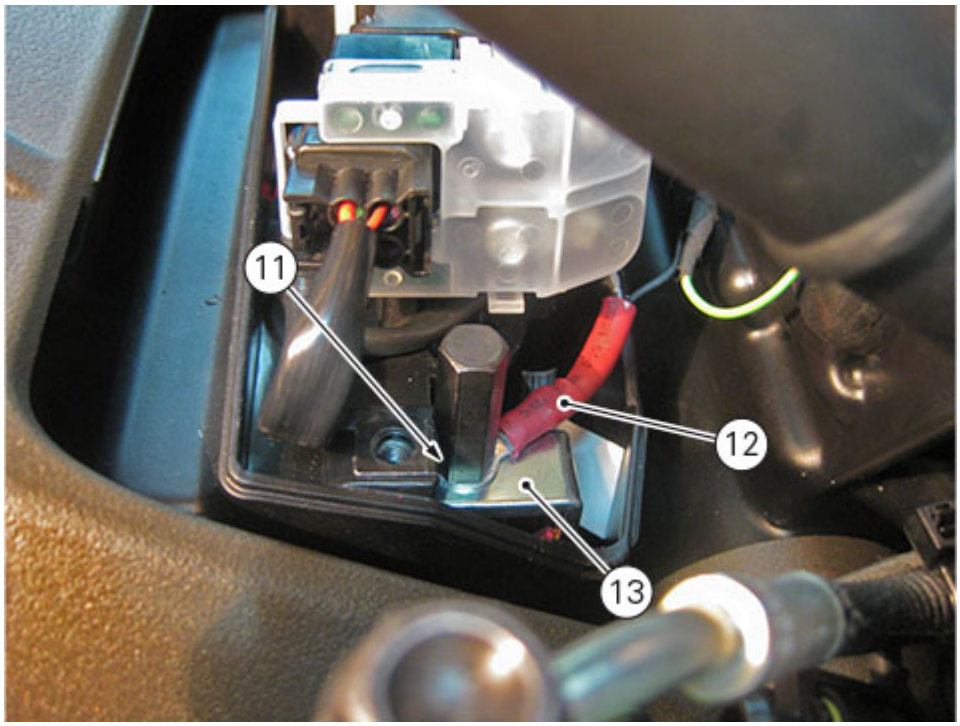

Position gear sensor cable (19) inside electrical components box, inserting cable ring (20) on box upper edge and aiming it as shown in the figure; complete wiring positioning as indicated in chapter "Routing wiring on frame".

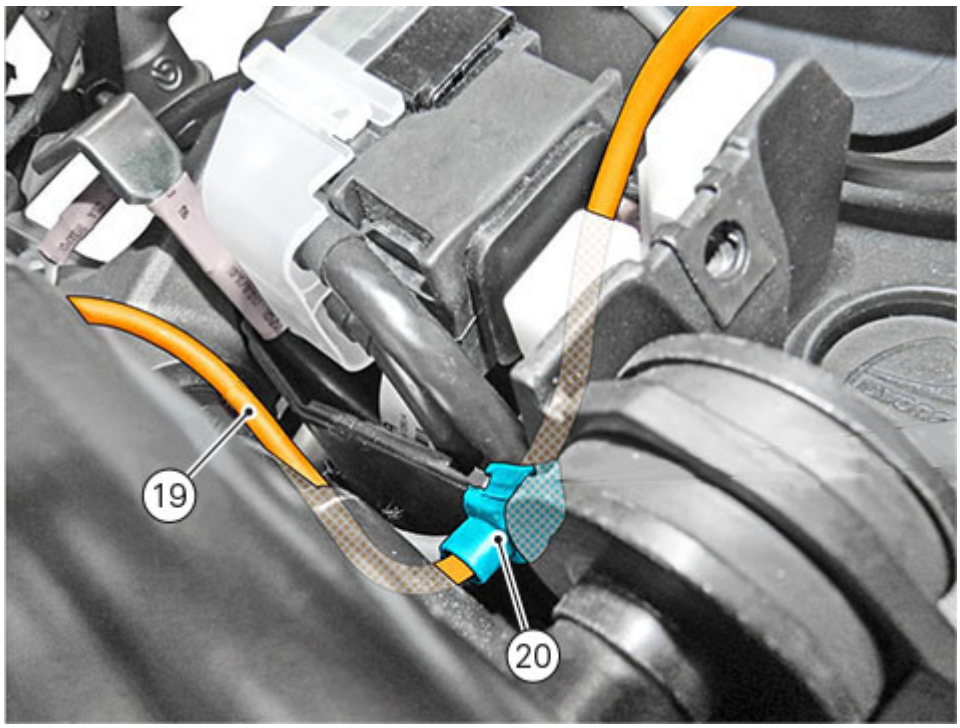

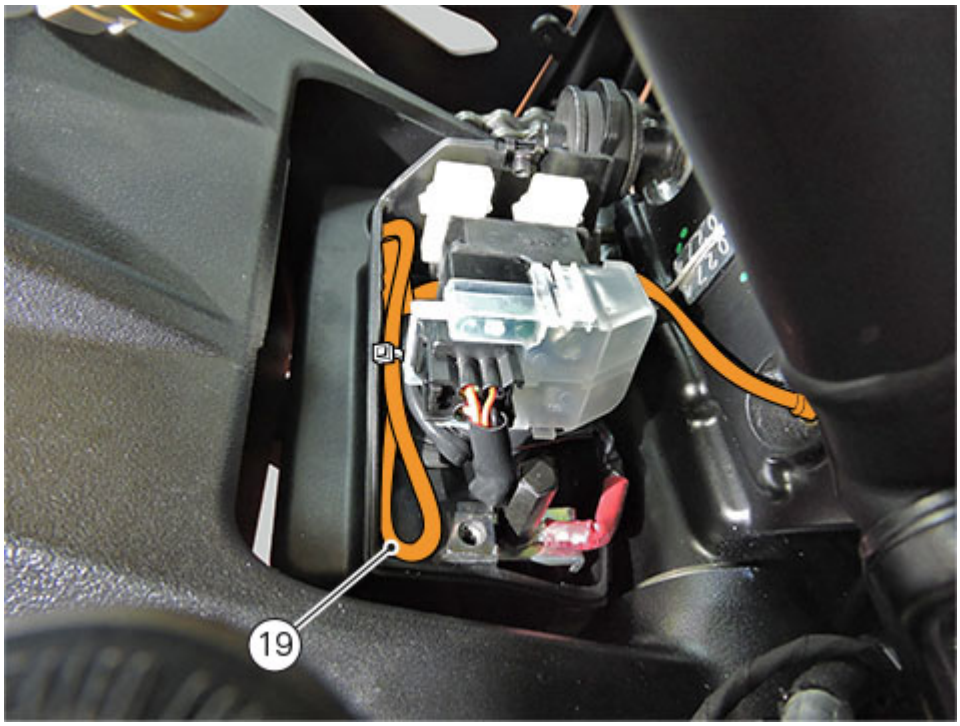

Fit the battery cover (10) on electric components support.
Start screws (9) and tighten them to a torque of 4Nm±10%.

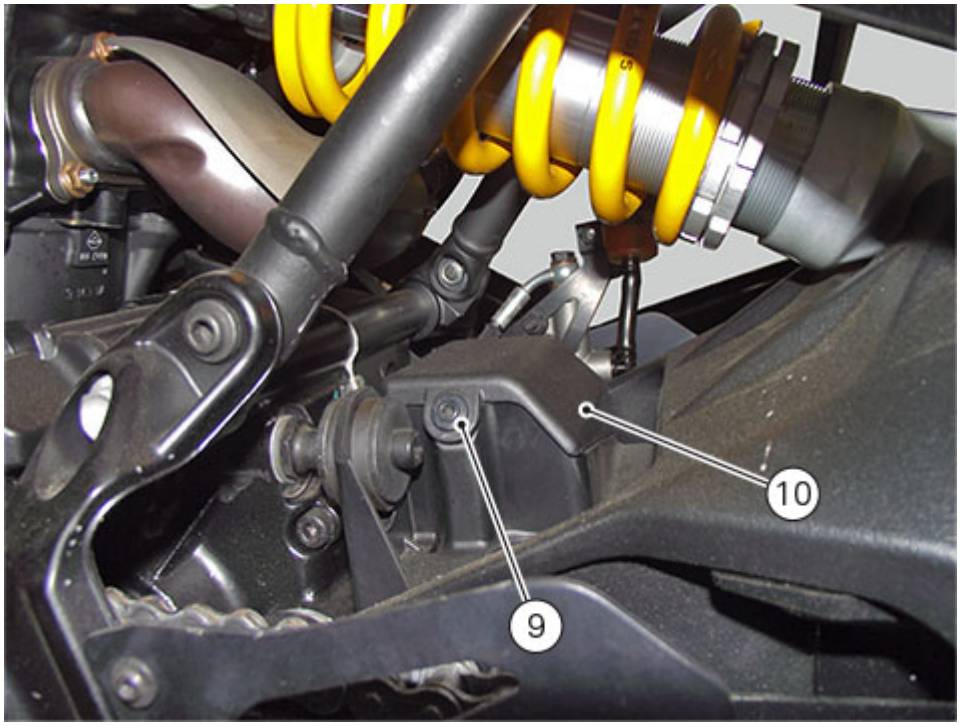



Fit the ground cable (6) on motorcycle and fasten it by tightening screw (5) to 10Nm±10%.

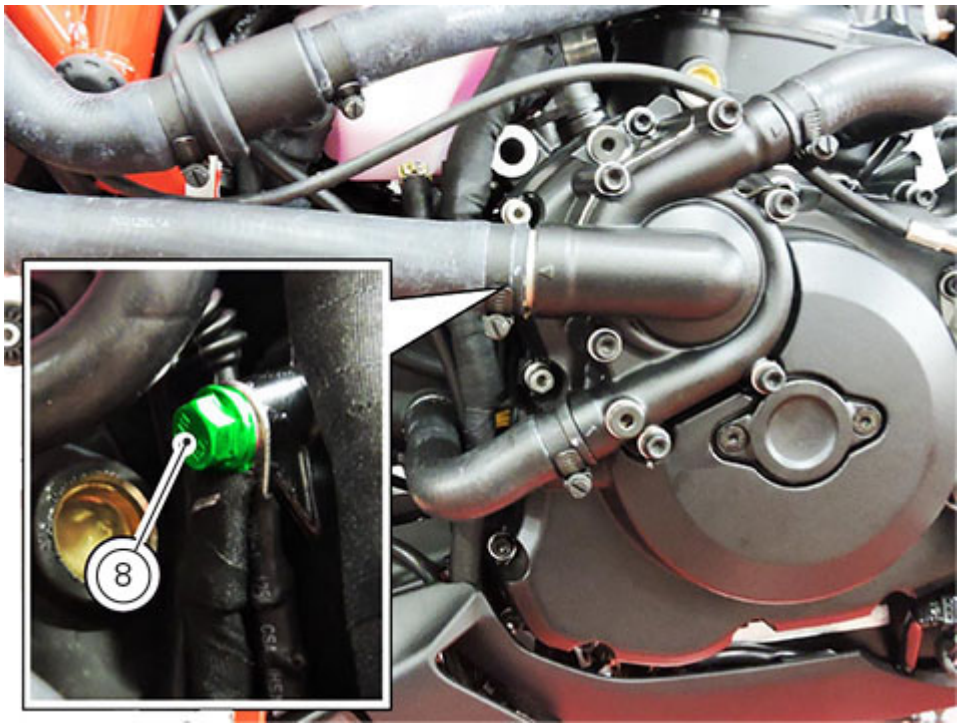

Insert Canister (6) inside bottom cover (5), with the retaining rubber band (7) around it and securing band to the relevant retainer on cover.

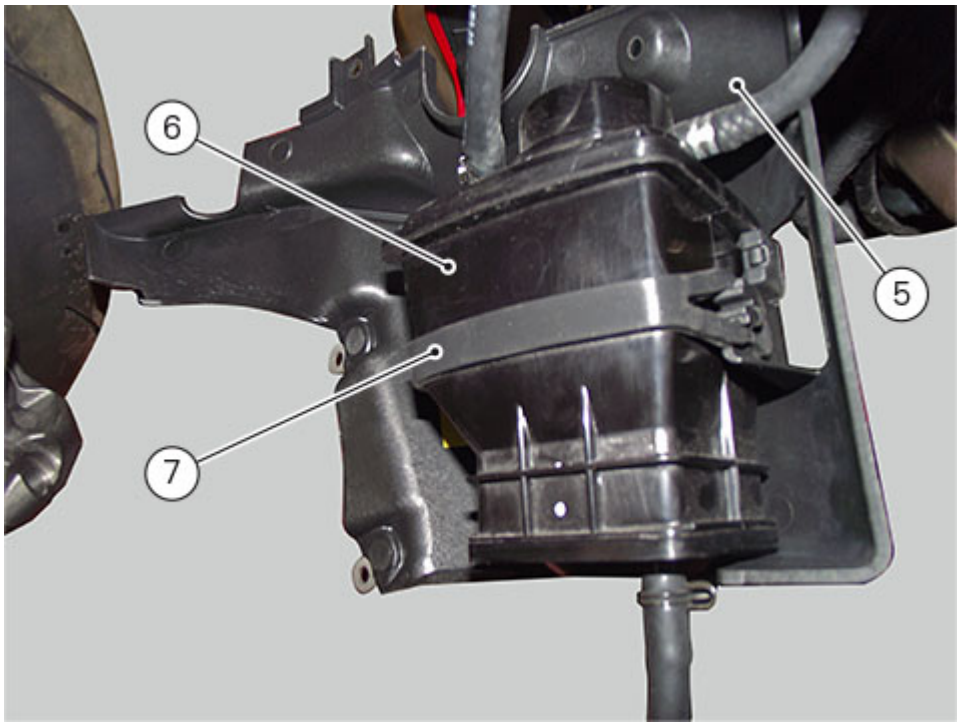

Install bottom cover (5) by tightening screws (3) to a torque of 5Nm±10% and screw (4) to a torque of 4Nm ±10%.
Install upper cover (2) and tighten screw (1) to a torque of 3Nm±10%.

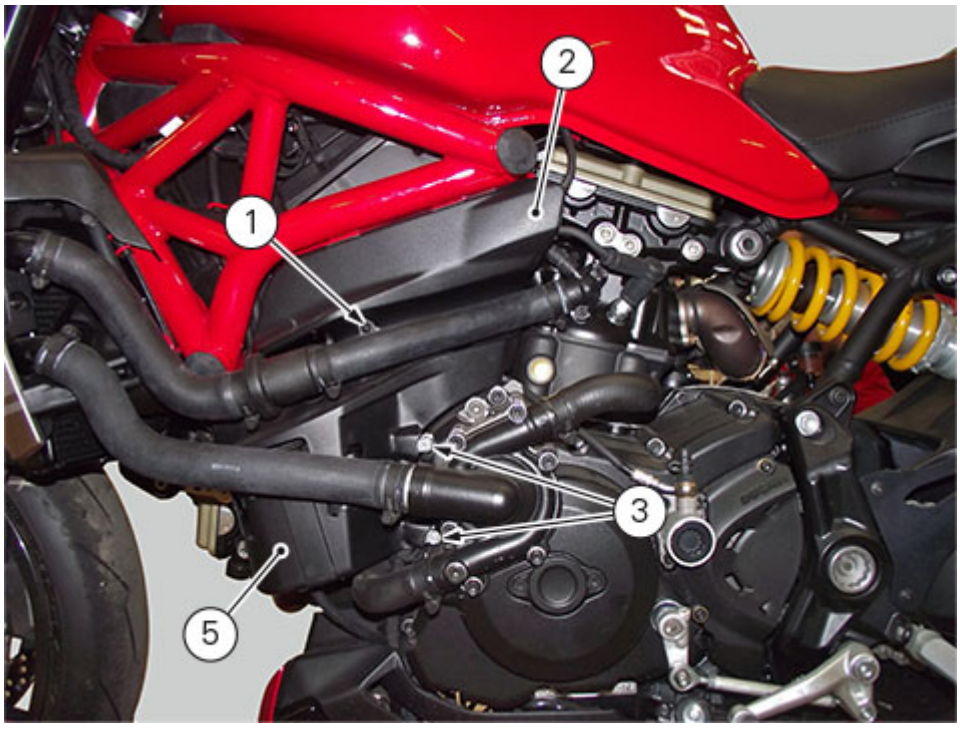

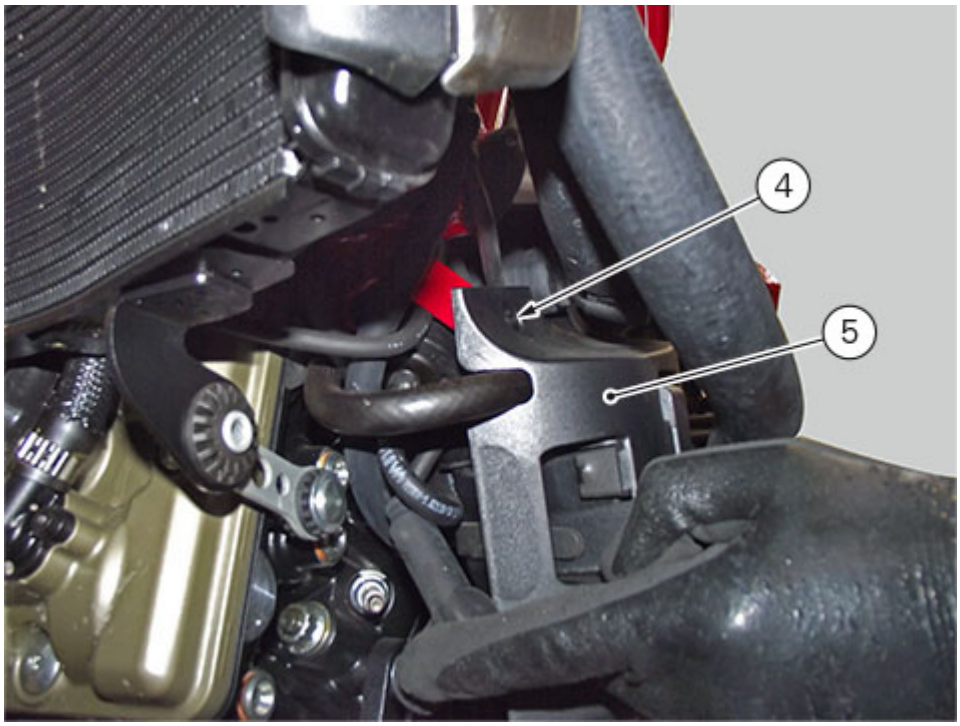
4
5

Removing the battery

Warning
Before carrying out any operations on the battery, keep in mind the safety standards. When under charge, batteries produce explosive gases. Keep batteries away from heat sources, sparks or open flames.

Instructions for battery use
The battery is a sealed, maintenance-free type and therefore requires no special installation procedure.

Important
Never try to open the battery as it is sealed, it does not require maintenance operations or to be filled in with acid or other types of liquids. Consequently, it does not need any operation upon its installation on the vehicle.

Note
Always keep the battery clean. Apply grease around the battery terminals to prevent corrosion.

Warning
Never remove the valve cover located on top of the cover. If the block, cover or terminals are broken or if the valve cover has been tampered with, IT IS ABSOLUTELY NECESSARY TO REPLACE THE BATTERY.

Warning
The battery gives off explosive gases; never cause sparks or allow naked flames and cigarettes near the battery. Check that during the battery charge, the area ventilation is adequate and that the ambient temperature is lower than 40 °C (104 °F). Do not try to open the battery: it does not require to be filled with acid or other types of fluids.

Important
If the motorcycle is left unused for more than 30 days, remove the battery and store it in a safe, cool place.

Always charge the battery before the first operation and after long storage periods – such as before selling the vehicle.

Removing the battery

On the left side of motorcycle, loosen the screw (1) and remove the top cover (2) by pulling it up.
Loosen the screws (3) and (4) and remove the lower cover (5).

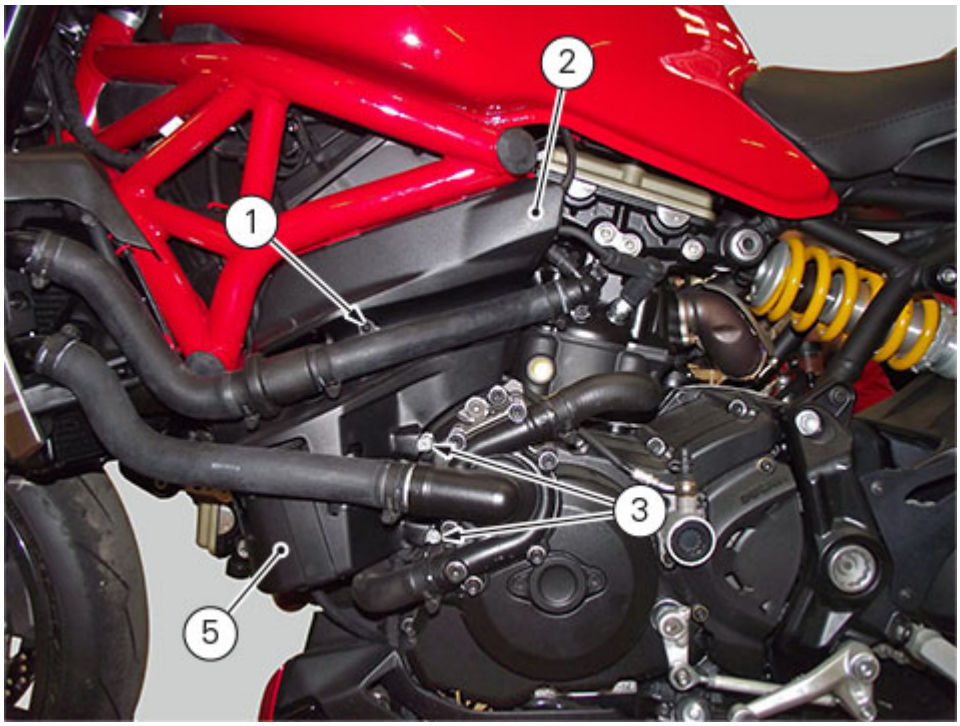

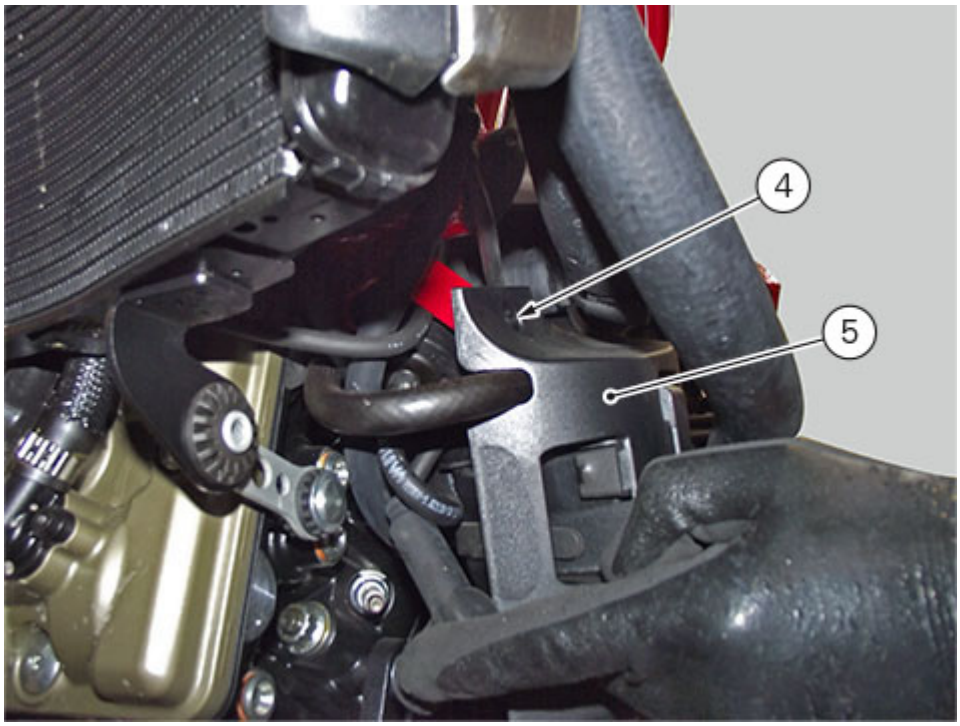

Remove Canister (6) from lower cover (5), disengaging rubber band (7) from its retainer.

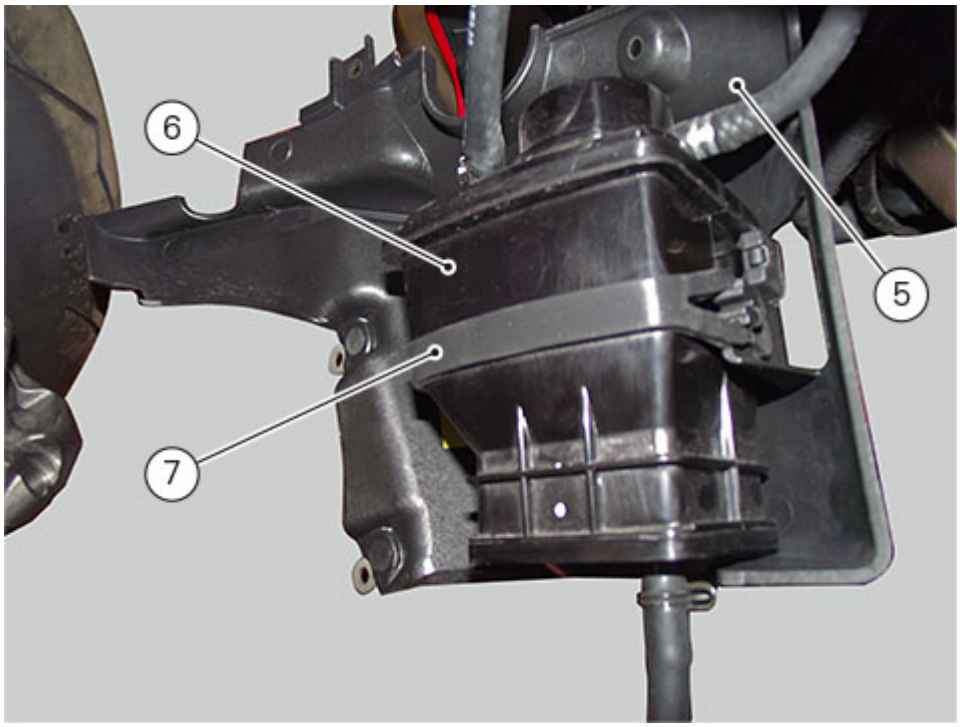

Undo the retaining screw (8) from the ground cables connected to the engine.

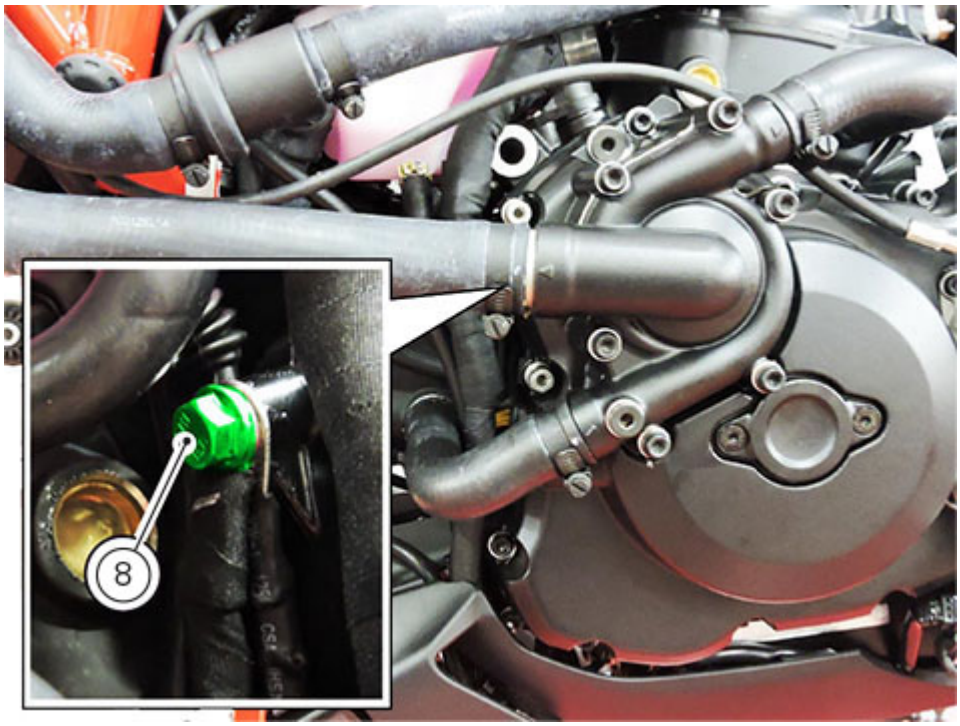

Warning

Insulate the ground cable end you just removed to prevent it from touching the motorcycle.

Remove the 2 screws (9) retaining battery cover (10) and slide it out.



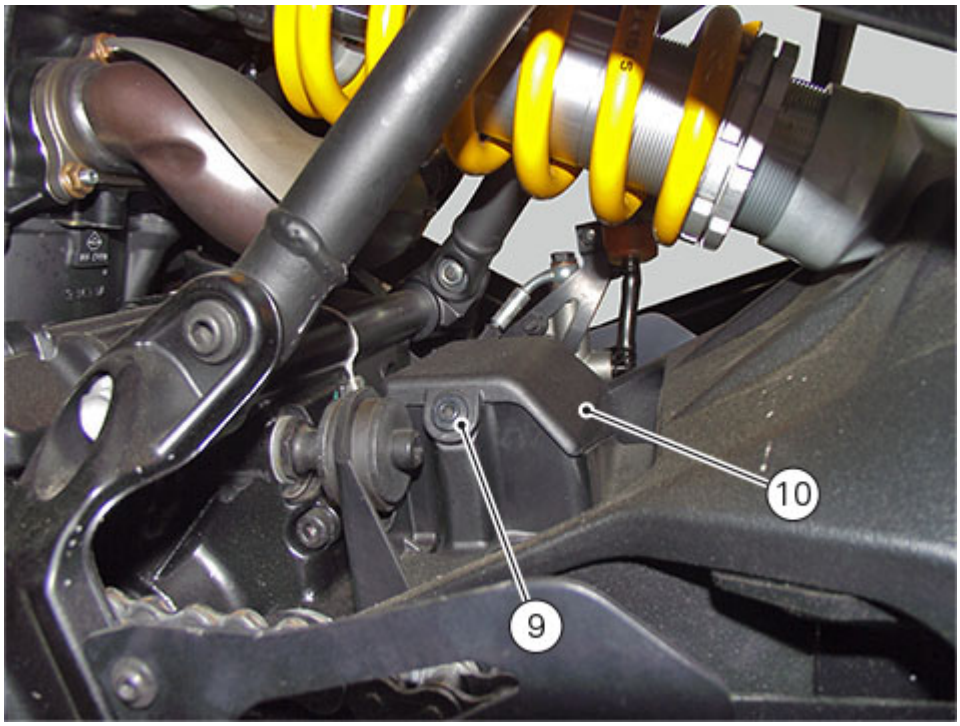

Loosen the special screw (11) retaining battery positive cable terminals (12) and ABS positive terminal (13) to battery positive pole.

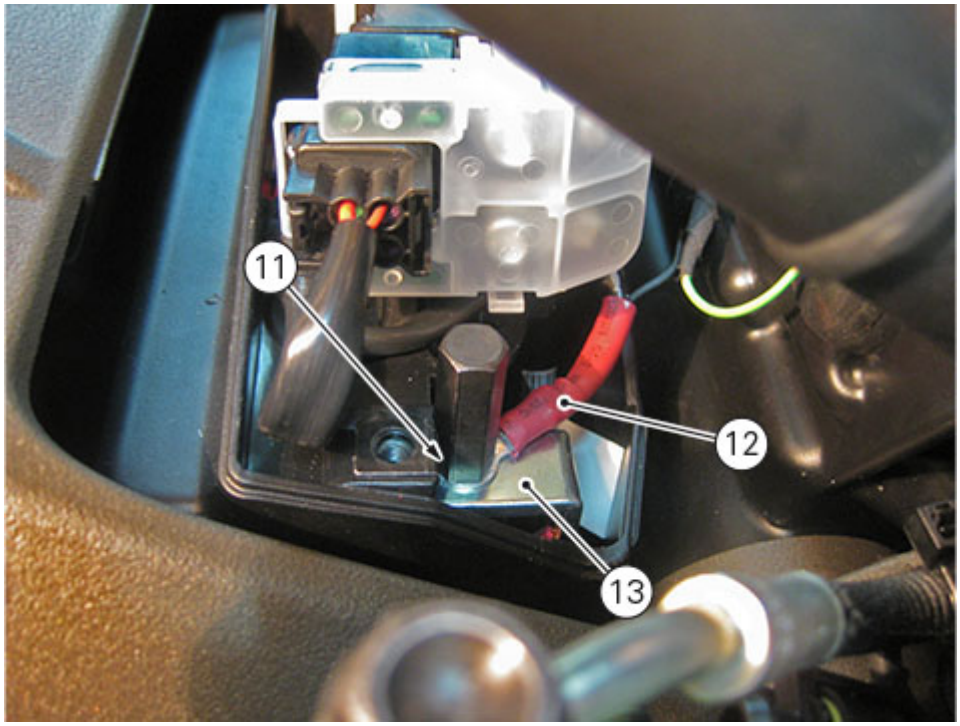

Fit a service pin (P) in the hole on electric components support (Q) to change the battery.

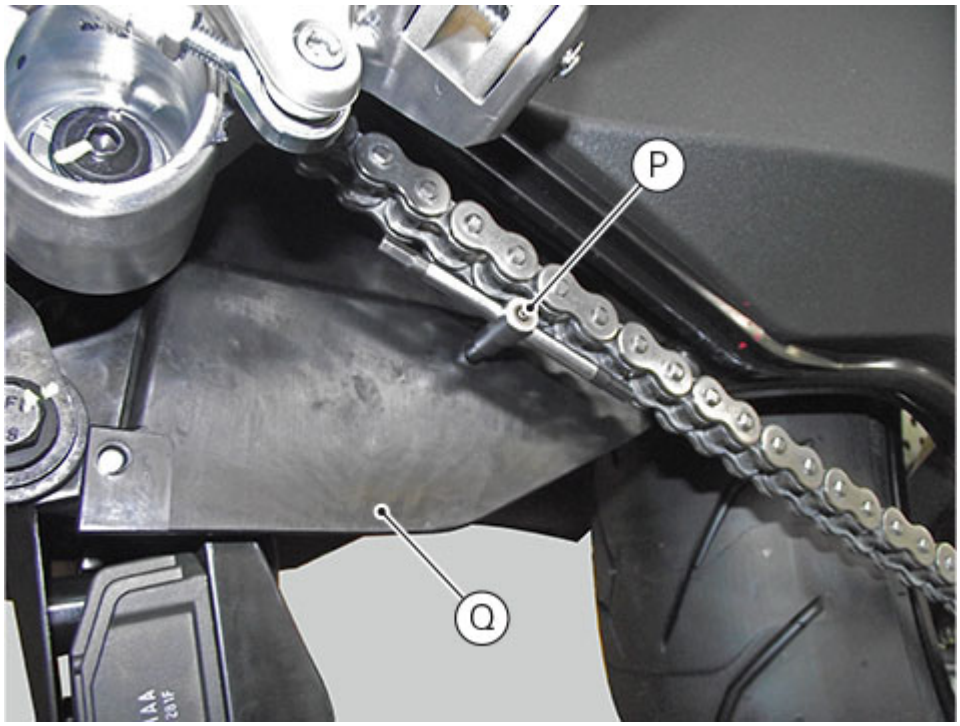

Remove the 2 screws (14) retaining battery mount cover (15), collecting spacers. Open battery mount cover (15) turning it downwards.

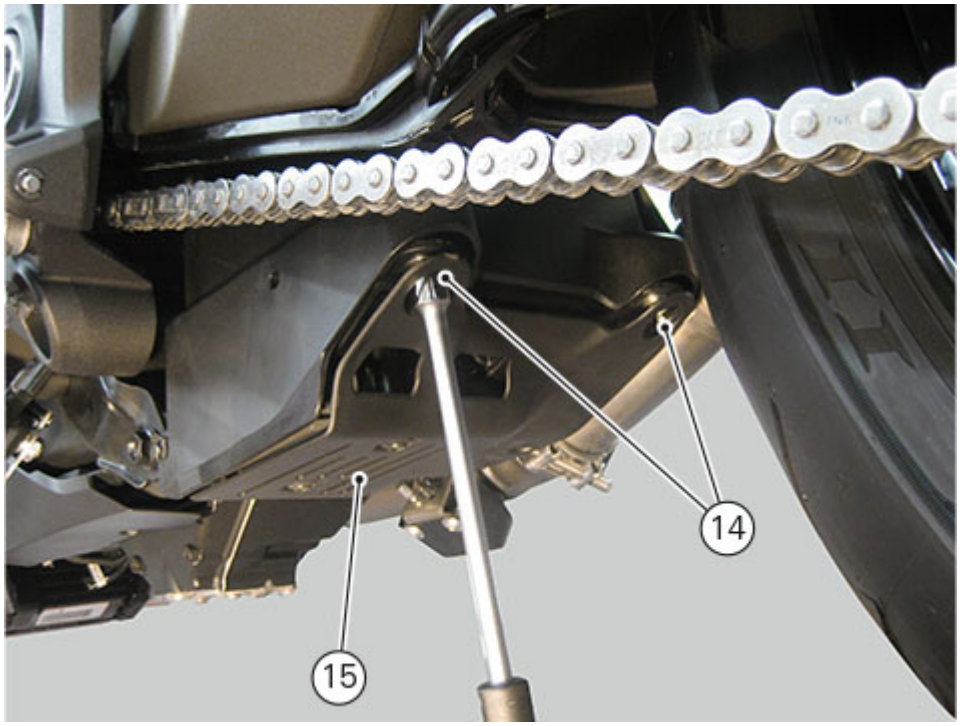

Turn battery mount cover (15) down and remove service pin (P) while supporting the battery (16) with your hand. Slowly slide down battery (16), pay attention to the negative pole (17), which is still connected to the wiring.

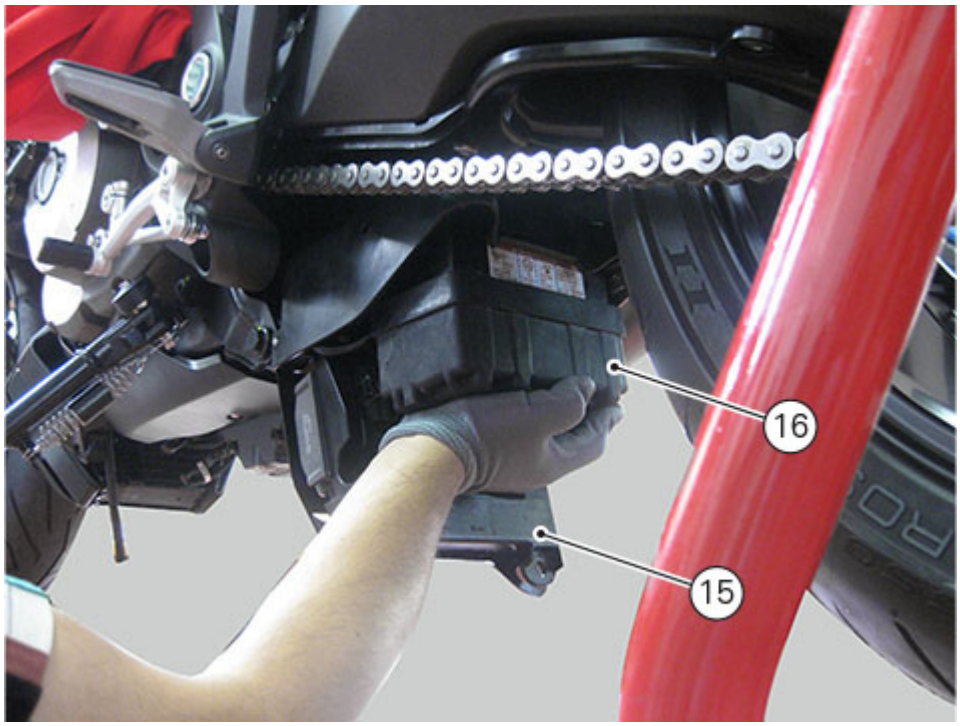

Lay battery on a raised support (at least 100 mm), slide negative cable (17) out of battery housing and release it from battery by loosening screw (18).
Remove the battery.

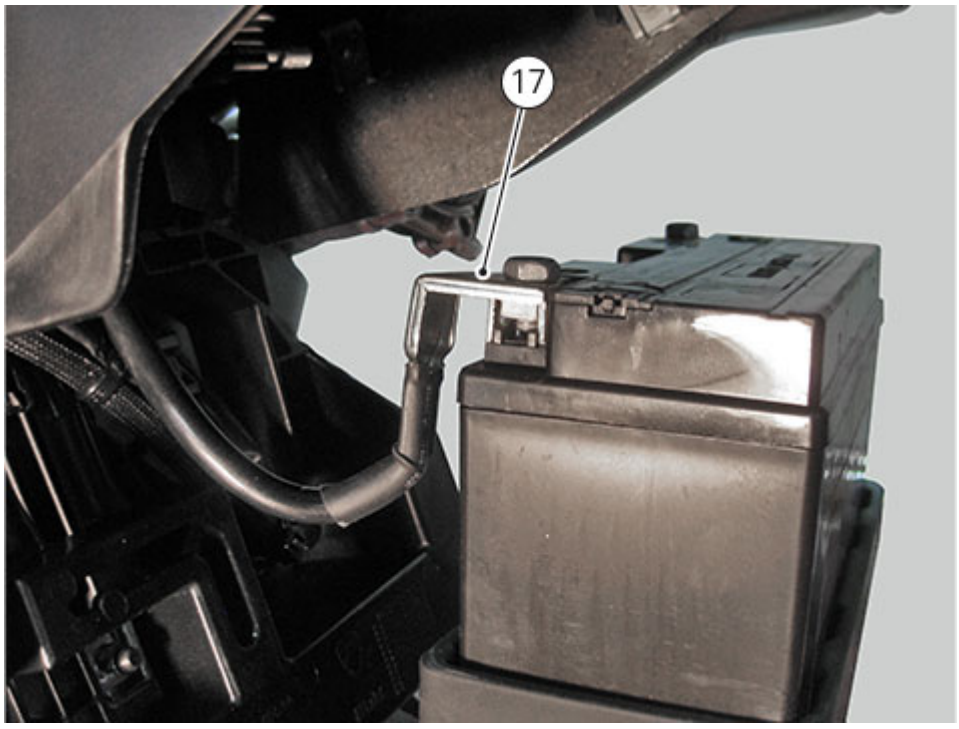

Topping up the electrolyte

Remove the battery (Removing the battery).

Warning
Before carrying out any operations on the battery, keep in mind the safety standards (General safety rules). The electrolyte in the battery is corrosive and can cause burns if it comes into contact with the skin because it contains sulphuric acid. Wear gloves and, if necessary, protective clothing, a face-mask and goggles when adding electrolyte. If the fluid comes into contact with the skin, wash thoroughly with fresh water. If it comes into contact with the eyes, wash thoroughly with water for 15 minutes and consult an ophthalmologist. In the event of accidental ingestion, drink large quantities of water or milk, and continue with milk of magnesia, a beaten egg or vegetable oil. Do not allow sparks, flames, cigarettes or any other heat source to get near the battery, as it produces explosive gases. When recharging or using the battery indoors, make sure that the room is adequately ventilated. Do not inhale the gases produced during recharging. KEEP OUT OF REACH OF CHILDREN.

Warning
Do not dispose of exhausted battery into the environment.

Smaltimento
Do not dispose of waste into the environment. Collect and deliver waste to authorized collecting centres. Dispose of waste in compliance with the prevailing local and national standards. European Waste Catalogue Codes recommended for waste disposal as indicated by Decision No 2001/118/EC: CER 16 06 01* (Lead batteries).

Note
It should be noted that the above-mentioned CER code is a general and non-binding provision, provided based on product original composition and intended use. The user is thus responsible for selecting the CER code most suitable to the concerned product, based on product real use and taking into account any alterations and/or contaminations of the product, as well as any amendments to the prevailing standard on waste disposal.

Place the battery on a flat surface.
Remove the protective film (1).

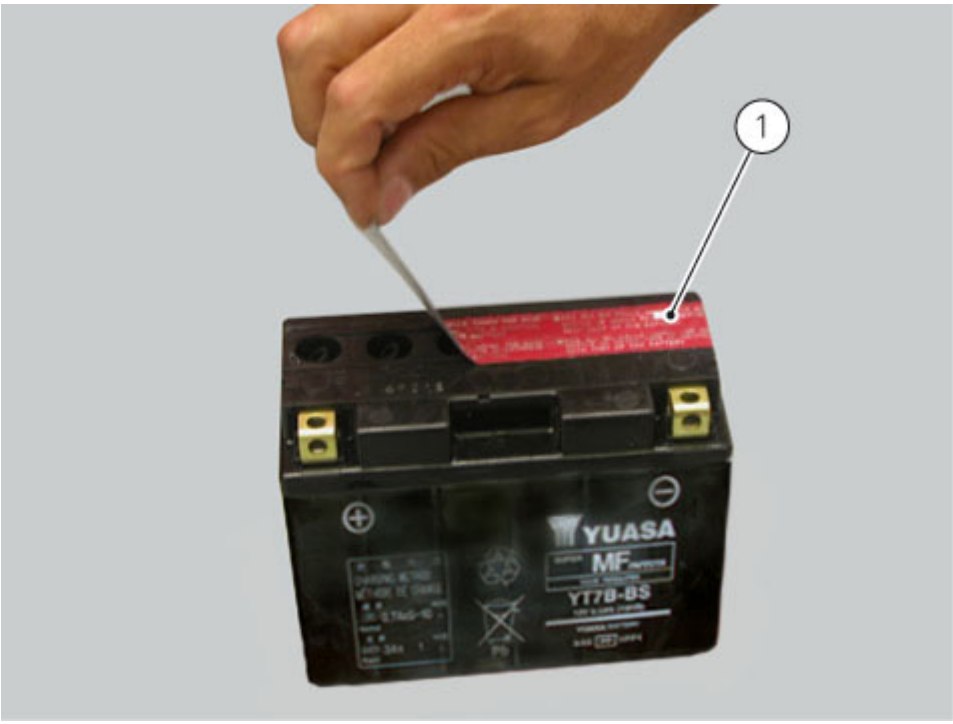

Warning
Make sure that the electrolyte is of the specific type for your battery.

Remove the container with the electrolyte from the plastic bag.
Remove the cap strip (3) from the container (2).



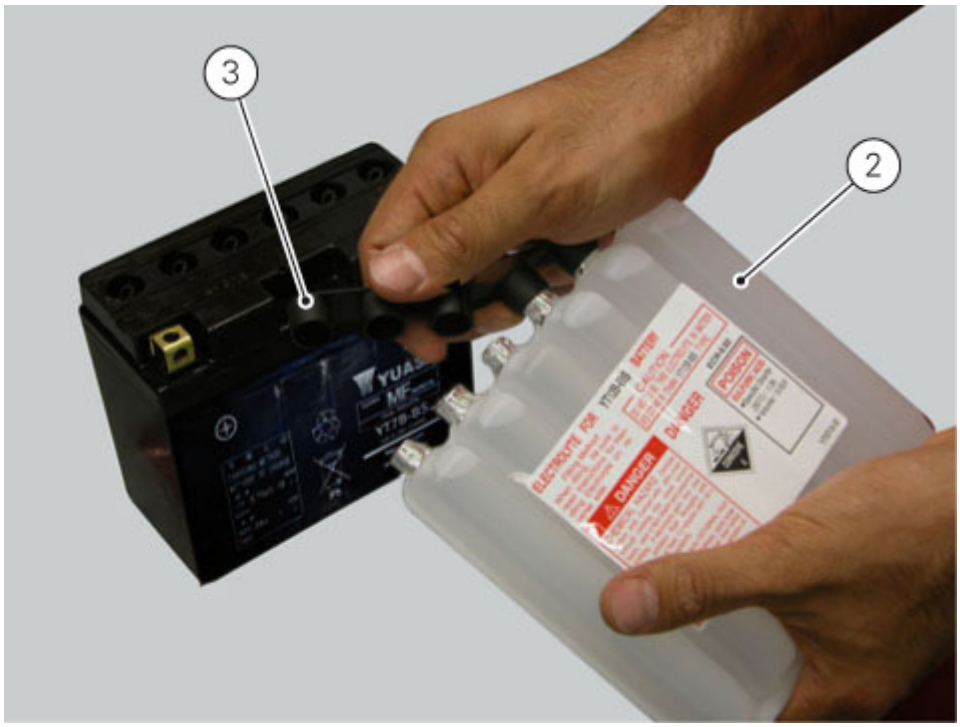

Important

Keep the cap strip (3) to hand because it will be used later to plug the battery cells.

Warning

Do not peel or perforate the sealed areas.

Place the electrolyte container (2) upside down. Align the six sealed elements with the six filler holes on the battery.
Push the container (2) downwards with sufficient force to break the seals and allow the fluid to flow out.

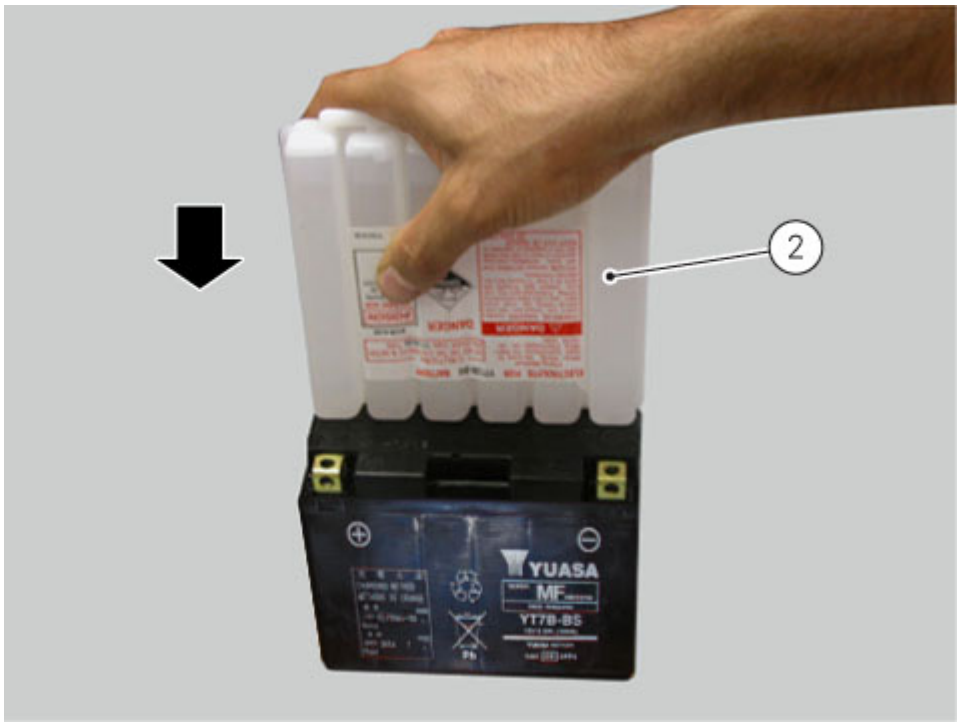

Note

Do not tilt the electrolyte container as this could interrupt the flow temporarily or even permanently.

Make sure that air bubbles emerge from all six filler holes.
Leave the container in this position for at least twenty minutes.
If no bubbles emerge from one of the holes, tap gently on the bottom of the respective container.



Important

Never move the container away from the battery. Do not cut or puncture the container.

Make sure that all the electrolyte has flowed out.
Carefully extract the container (2) from the battery.
Fit the cap strip (3) previously removed from the electrolyte container (2) to the battery, and ensure the caps plug off all filler holes.

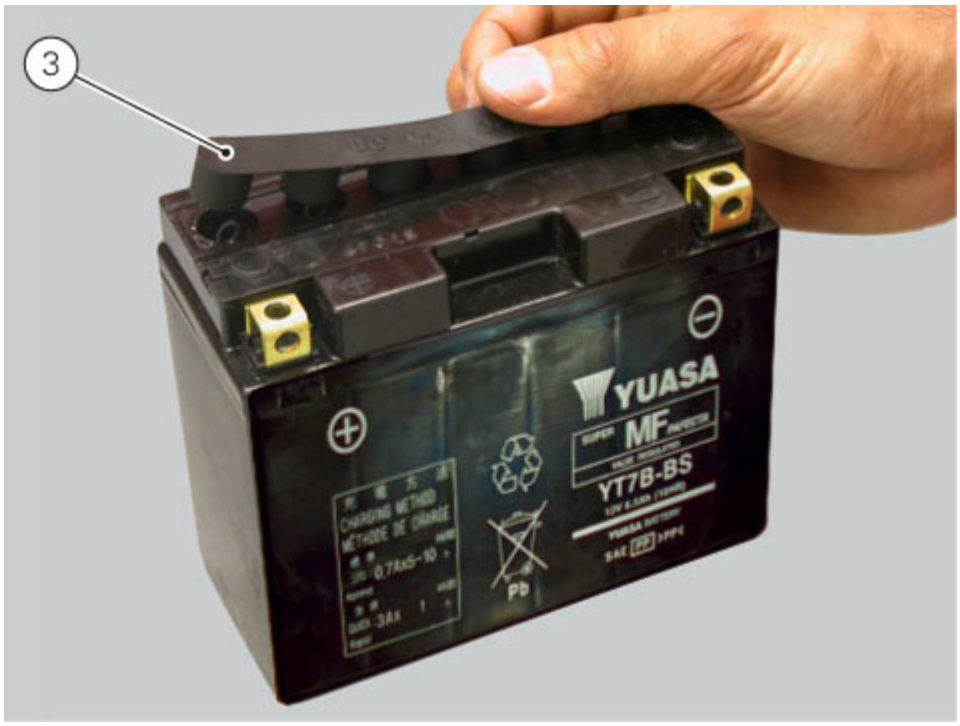

3 -12 Ah batteries: leave to stand for at least 30 min.
Over 12 Ah batteries: leave to stand for at least 1 hour.
Set the cap strip on the filler holes without securing it.
Recharge the battery as described in the paragraph "Recharging the battery".

Note
When using an automatic battery charger, ensure that the charger current (ampere) is equal to or higher than the value of the standard charging system (STD) indicated on the battery itself.

Press firmly downwards with both hands until the caps are firmly in place (do not use a hammer).

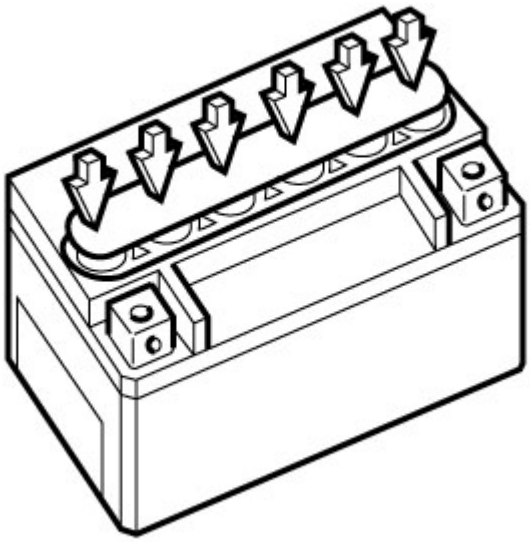

Warning
Do not dispose of the electrolyte container into the environment.

Smaltimento
Do not dispose of waste into the environment. Collect and deliver waste to authorized collecting centres. Dispose

of waste in compliance with the prevailing local and national standards. European Waste Catalogue Codes recommended for waste disposal as indicated by Decision No 2001/118/EC: CER 15 01 10* (Packaging containing residues of or contaminated by dangerous substances).

 Note

It should be noted that the above-mentioned CER code is a general and non-binding provision, provided based on product original composition and intended use. The user is thus responsible for selecting the CER code most suitable to the concerned product, based on product real use and taking into account any alterations and/or contaminations of the product, as well as any amendments to the prevailing standard on waste disposal.

Recharging the battery

Battery safety rules

Warning
Before carrying out any operations on the battery, keep in mind the safety standards. When under charge, batteries produce explosive gases. Keep batteries away from heat sources, sparks or open flames.

Instructions for battery use
The battery is a sealed, maintenance-free type and therefore requires no special installation procedure.

Note
Always keep the battery clean. Apply grease around the battery terminals to prevent corrosion.

Warning
Never remove the valve cover located on top of the cover. If the block, cover or terminals are broken or if the valve cover has been tampered with, IT IS ABSOLUTELY NECESSARY TO REPLACE THE BATTERY.

Important
If the motorcycle is left unused for more than 30 days, remove the battery and store it in a safe, cool place.

Always charge the battery before the first operation and after long storage periods – such as before selling the vehicle.

Refer to the label on the battery showing the inspection intervals in order to determine when to test the voltage.



Charge the battery if the open circuit voltage is lower than 12.8 V. Leaving the battery discharged for more than one month could damage it. Check the battery charge with a voltmeter.
Always check the condition of the battery before recharging and 1 to 2 hours afterwards.

Warning
Pay careful attention to recharging times. Stop charging immediately if the battery becomes too hot to the touch. Leave to cool before resuming charging.

Use only constant-voltage battery chargers.
Check that battery terminals are properly connected to the battery charger.
To charge the battery, proceed as follows.

Type of charging	Volt	Ampere (A)	Time (Hours)
Normal	12	0.9	5-10

Use fast charging in emergencies only.

Storing the battery

If the battery voltage is less than or equal to 11.5 V, it must be recharged.
Connect the battery charger to the battery.
Use a voltage of 16-17 V.
If the ammeter shows no change, increase the voltage to maximum 25 V.
Charge for 5 minutes.
If the ammeter shows a change, restore a voltage of 16-17 V; otherwise replace the battery.

Checking the battery charging system

Perform checks on the system as indicated in the following paragraphs:

Recharging the battery
Topping up the electrolyte
Removing the battery
Refitting the battery
Alternator / Generator
Rectifier-regulator

Solenoid starter

The solenoid starter (1) is mounted under the battery cover.



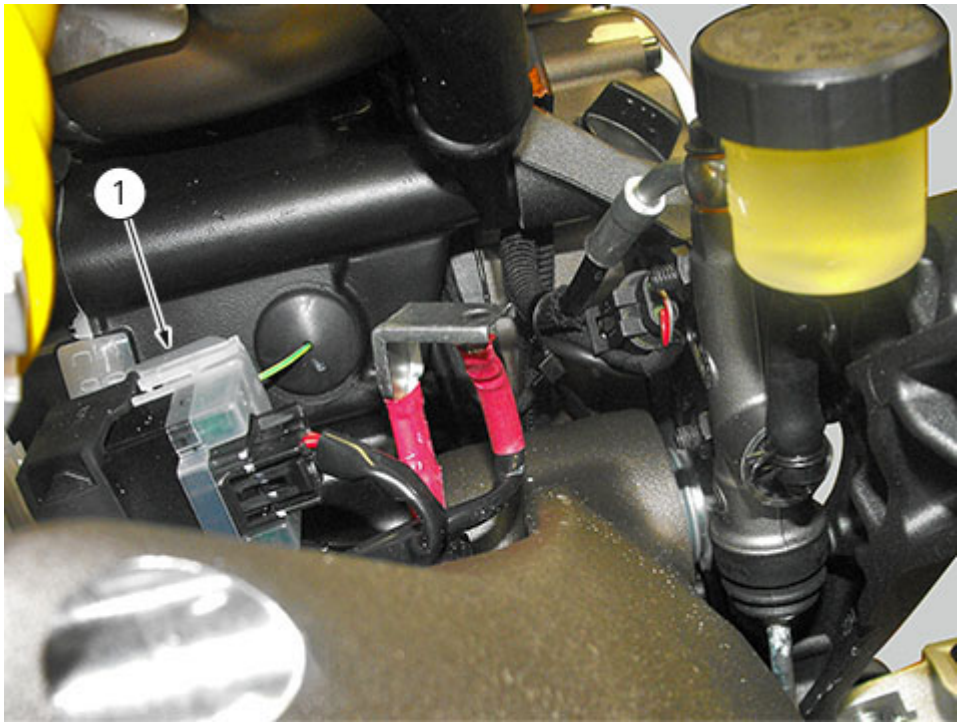

REMOVING THE SOLENOID STARTER

Loosen the two fastening screws (2) on cover (3) protecting the solenoid starter.

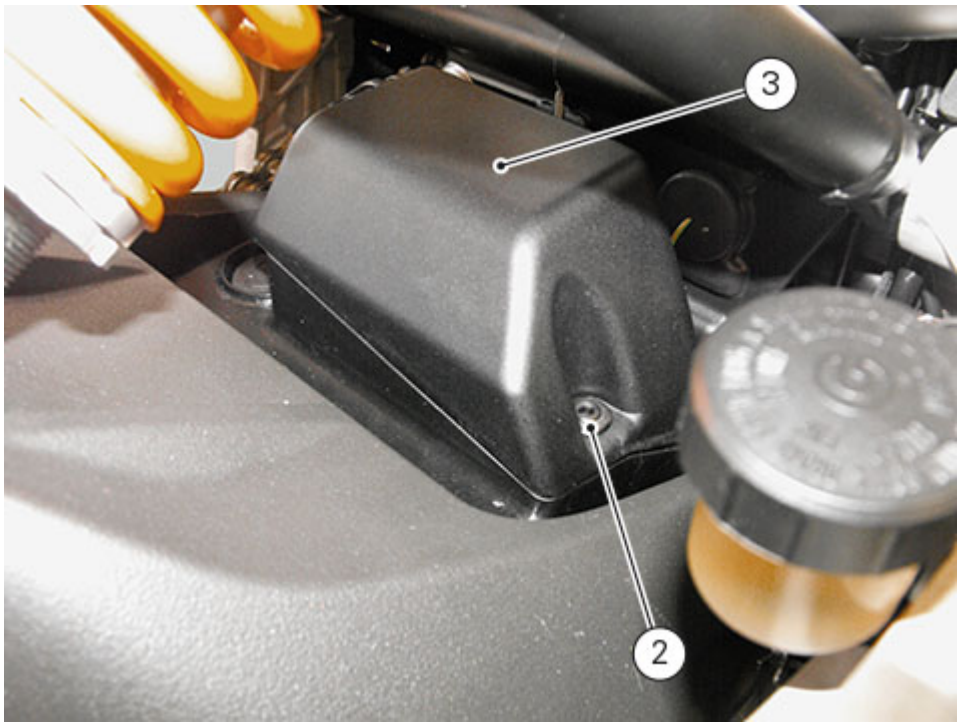

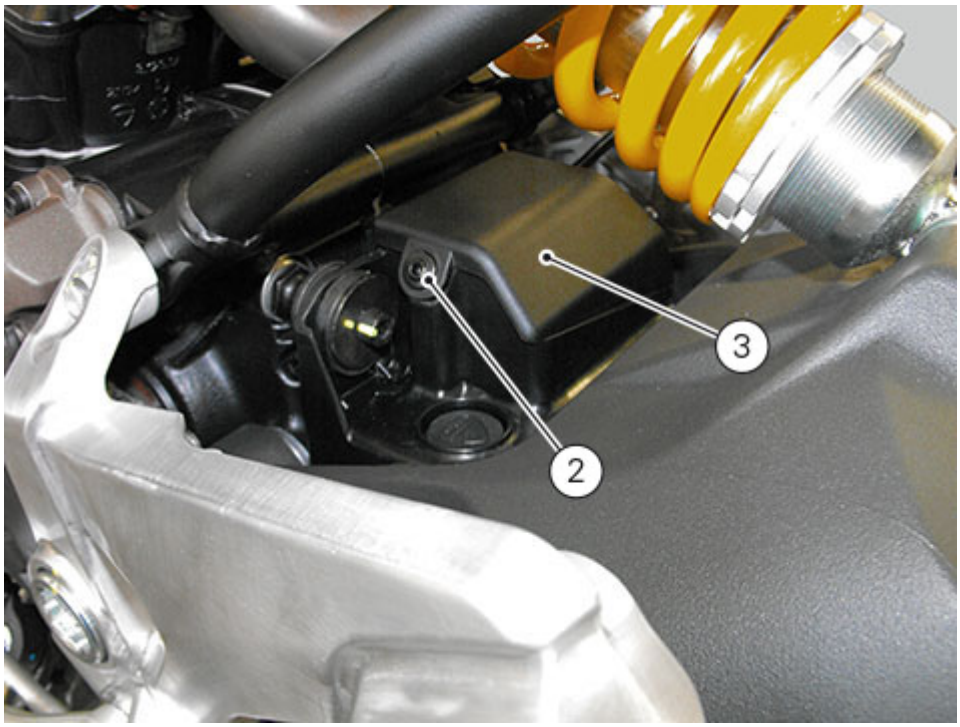

Disconnect regulator connector (4).

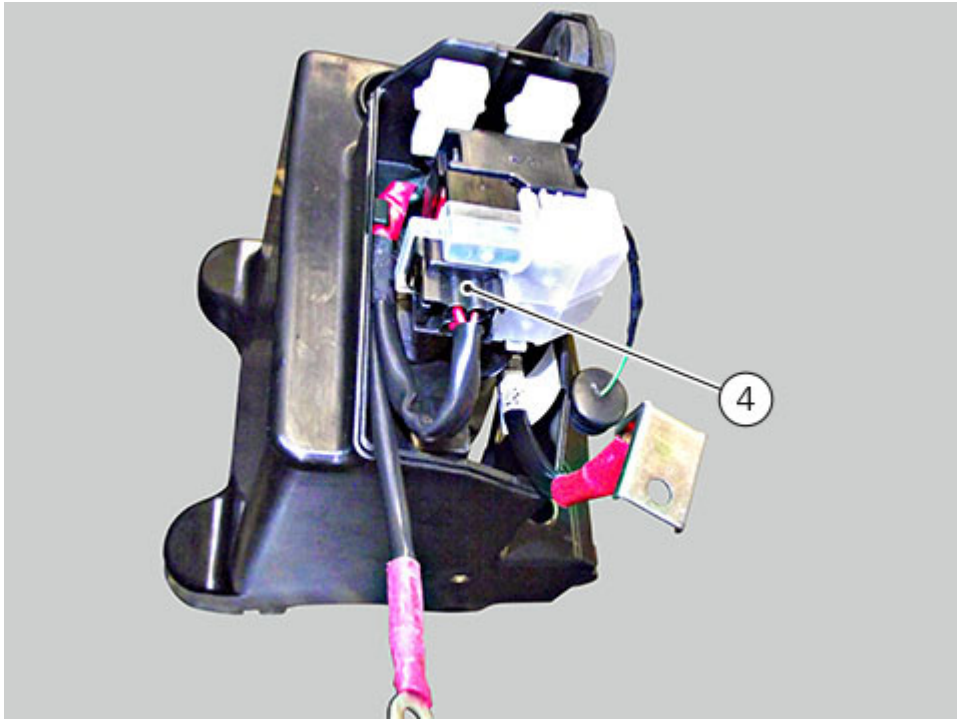

Remove the solenoid starter (1) by pulling it up and releasing it from fasteners (5).

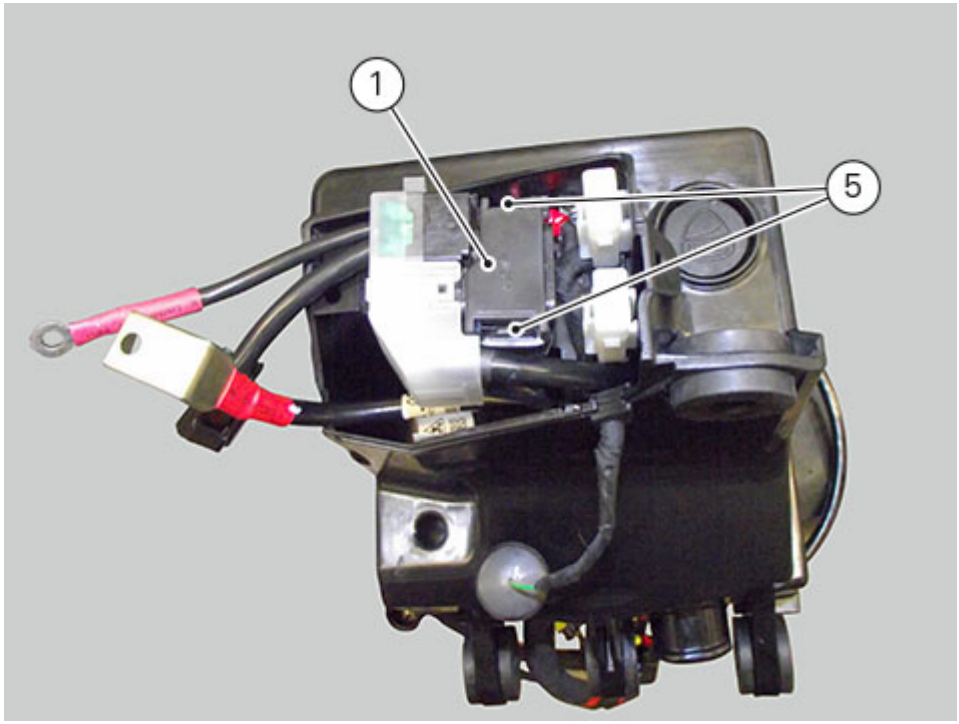

Slide out protection cap (6).
If necessary, loosen screws (7) and collect the relevant washers (8).
Release the starter motor solenoid starter cable (9) and the solenoid starter-battery cable (10).

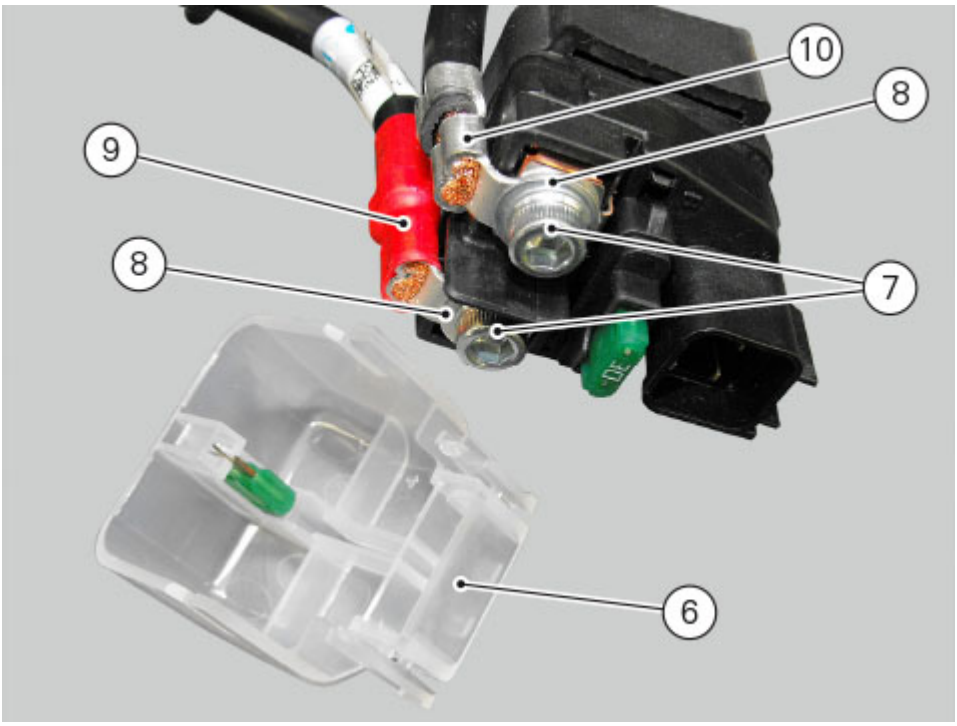

CHECKING OPERATION OF THE SOLENOID STARTER

Apply 12V (battery voltage) across the positive terminal and negative terminal of the connector.
With a multimeter connected between the two poles (threaded pins) of the solenoid starter, check for electric continuity.
If there is no electric continuity, ensure that the terminals are not oxidised and apply water repellent spray.
Change the solenoid starter if the malfunction persists.

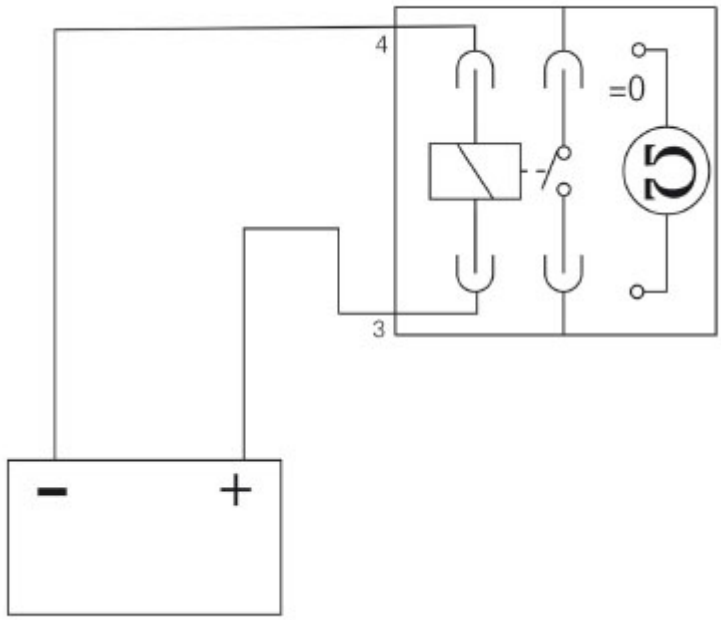

REFITTING THE SOLENOID STARTER

Lay down the starter motor-solenoid starter cable (9) and the solenoid starter-battery cable (10).
Position the two washers (8) and start screws (7).
Tighten the screws (7) to a torque of 10Nm ± 10%.
Refit protection cap (6).

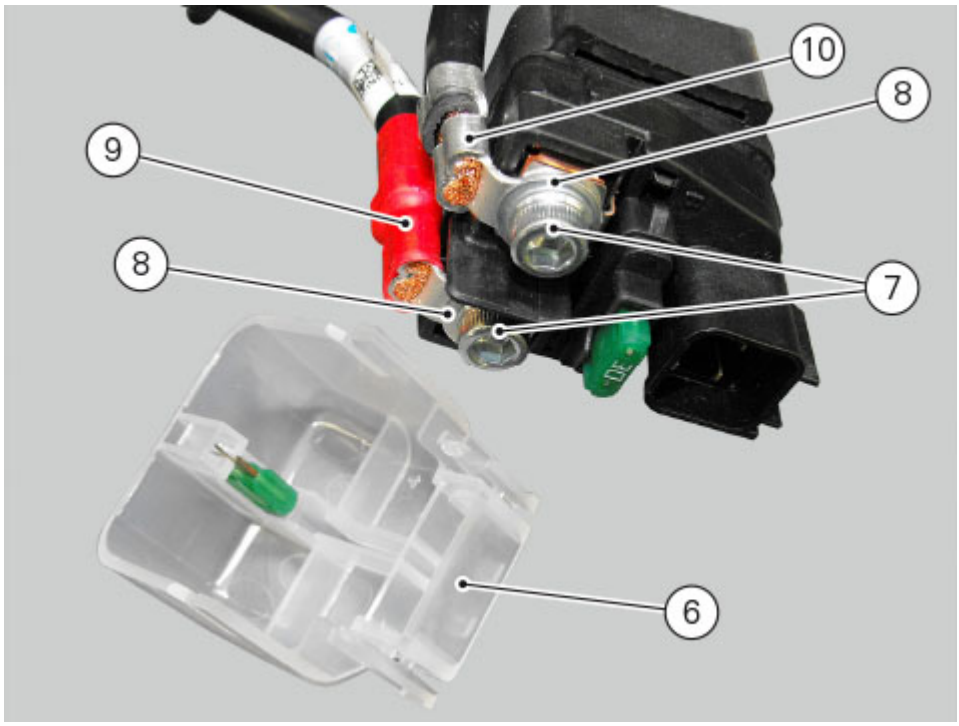

Engage solenoid starter (1) in retainers (5).

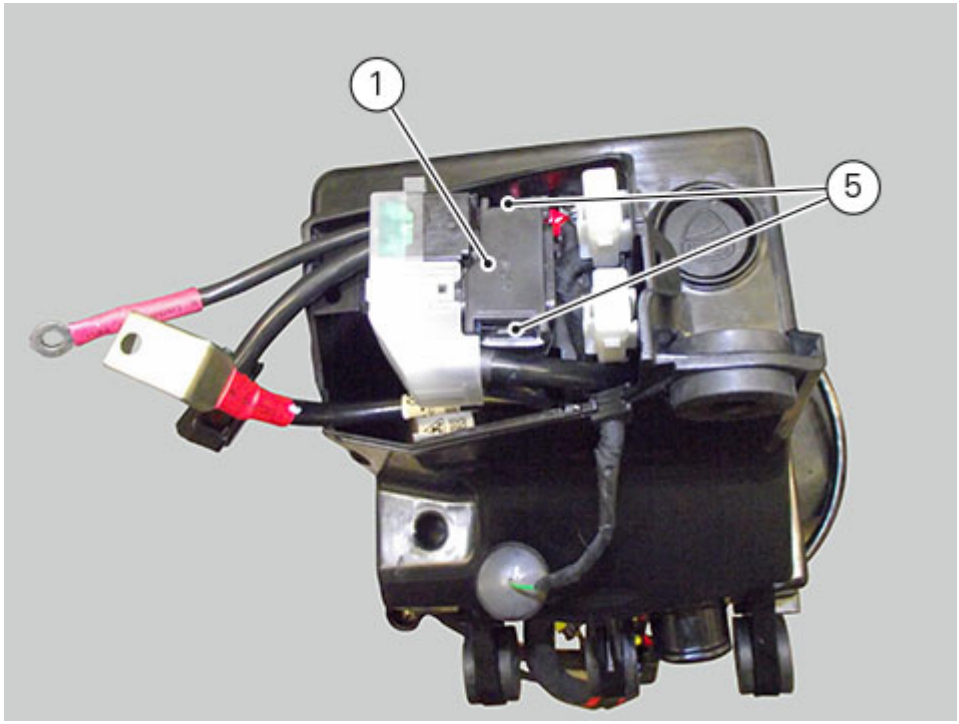

Connect the connector (4).

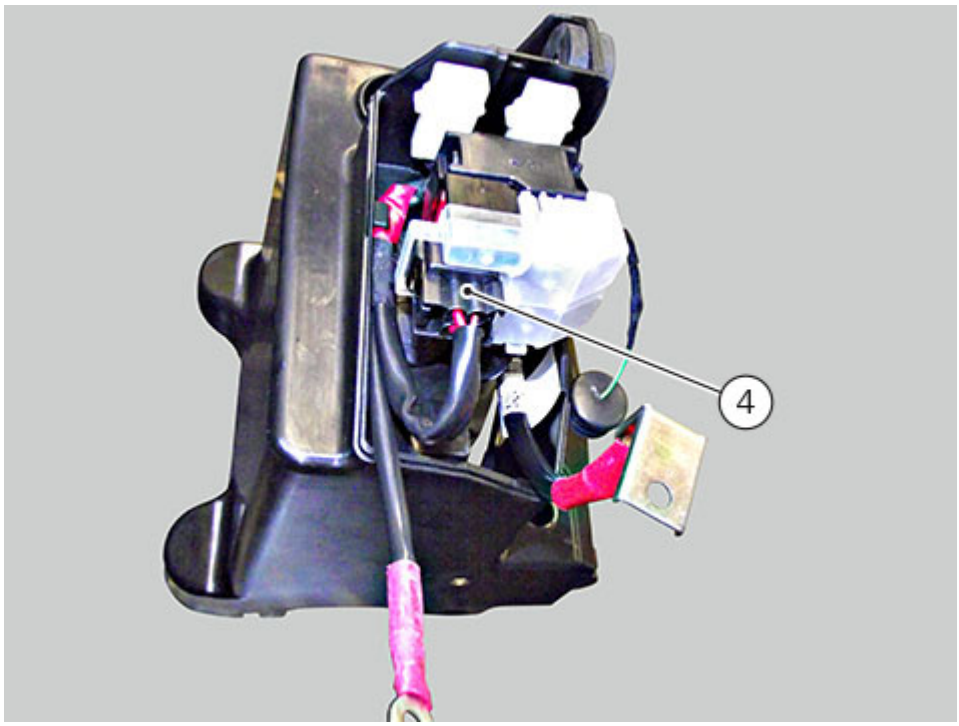

Position cover (3) and tighten the two screws (2) to a torque of 4Nm±10%.

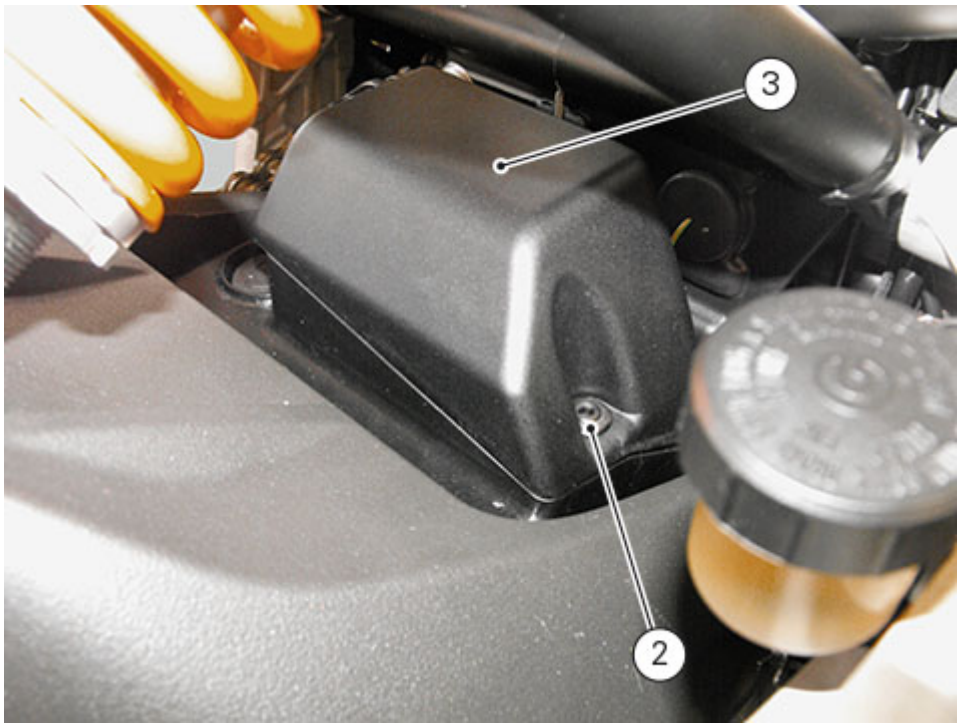

Starter motor

Electric features:
12V / 0.7 kW



The starter motor is highly compact and reliable, therefore rarely raises any operating issue.
In case of faults:
- ensure that the starter motor wiring terminal is properly tightened under the nut and shows no sign of oxidation;
- if the terminal is properly tightened and free from oxidation, remove the starter motor and test it under no-load conditions (no load applied to the shaft).

Warning
Secure the starter motor to a test bench, making sure not to damage the casing.

Warning
Use a fully charged 12 V battery for the test.

- Use battery-motor connection cables which are no longer than 70 cm and with the same cross-section as the cable on the vehicle itself;
- connect the negative terminal of the battery to an unpainted area of the starter motor casing and the positive terminal to its electrical terminal;
- the shaft of the starter motor should rotate freely and at a high speed.

Warning
Take care not to short-circuit the two cables connected to the battery.

Electric starting system

The electric starting system consists of a solenoid starter (1) and a starter motor (2).

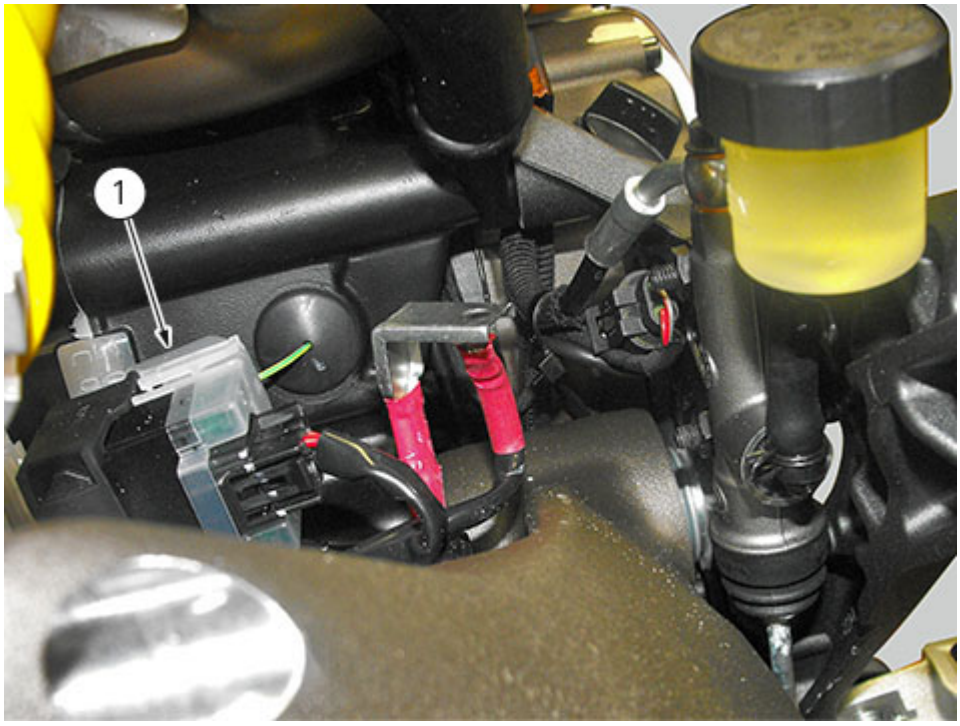

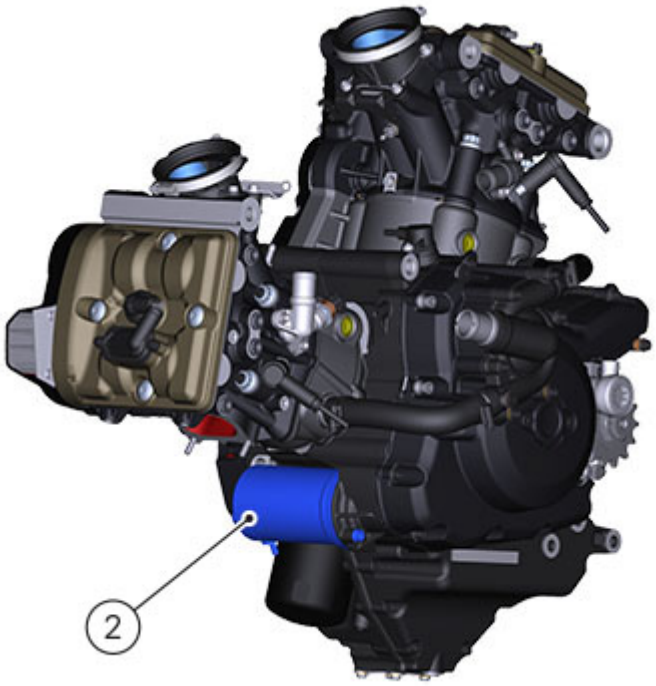

Replacing the tail light bulbs

The tail light is a LED light.
In case of bulb replacement, it will be necessary to replace the entire tail light (Removing the tail light).



Tail light

The tail light (1) on this motorcycle is a LED light.
In case of malfunctions or breakage, it will be necessary to replace the entire tail light (1) (Removing the tail light).



Aligning the headlight

Position the vehicle with tyres inflated at the indicated pressure and a person seating on the seat, perfectly perpendicular to his/her longitudinal axis.
Position the vehicle 10 metres from a wall or a screen.
On the wall or surface, draw a horizontal line at the same height from the ground as the centre of the headlight and a vertical line aligned with the longitudinal axis of the motorcycle.

Note
If possible, perform this check in dim light.

Switch on the low beam. The height of the upper limit between the dark area and the lit area must not be more than 9/10 of the height from the ground of the headlight centre.

Note
This is the procedure specified by Italian regulations for checking the maximum height of the light beam. Please adapt said procedure to the provisions in force in your own country.

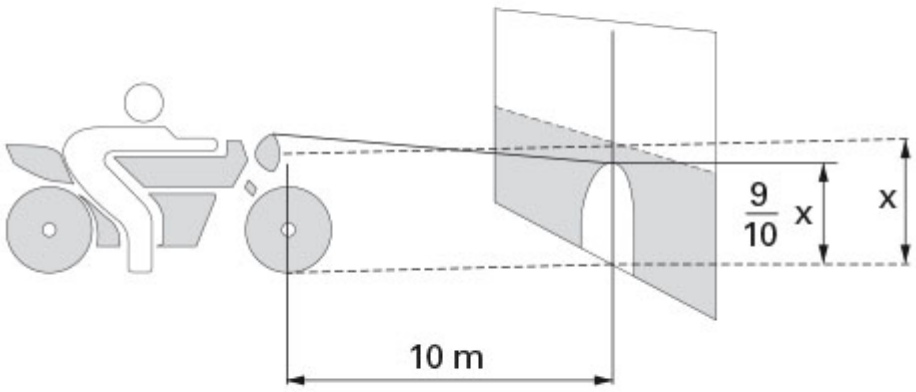

The vertical alignment of the headlight can be manually set by means of screw (1).
Turn clockwise to raise the beam, counter clockwise to lower it.

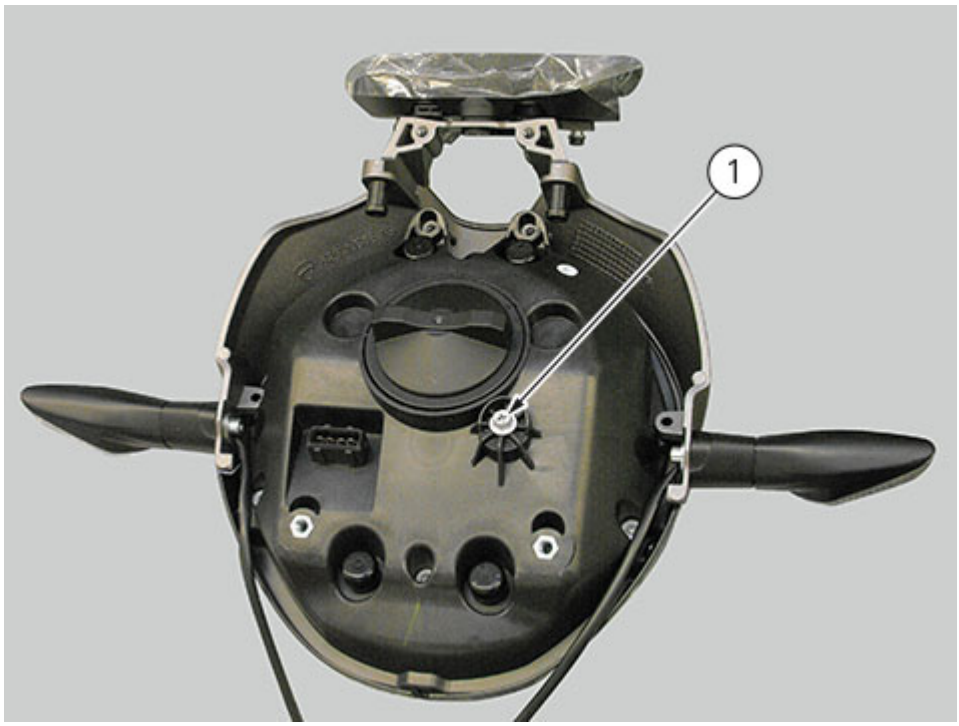
1

Replacing the light bulbs — Headlight

Remove the headlight.
Unscrew cover (1).

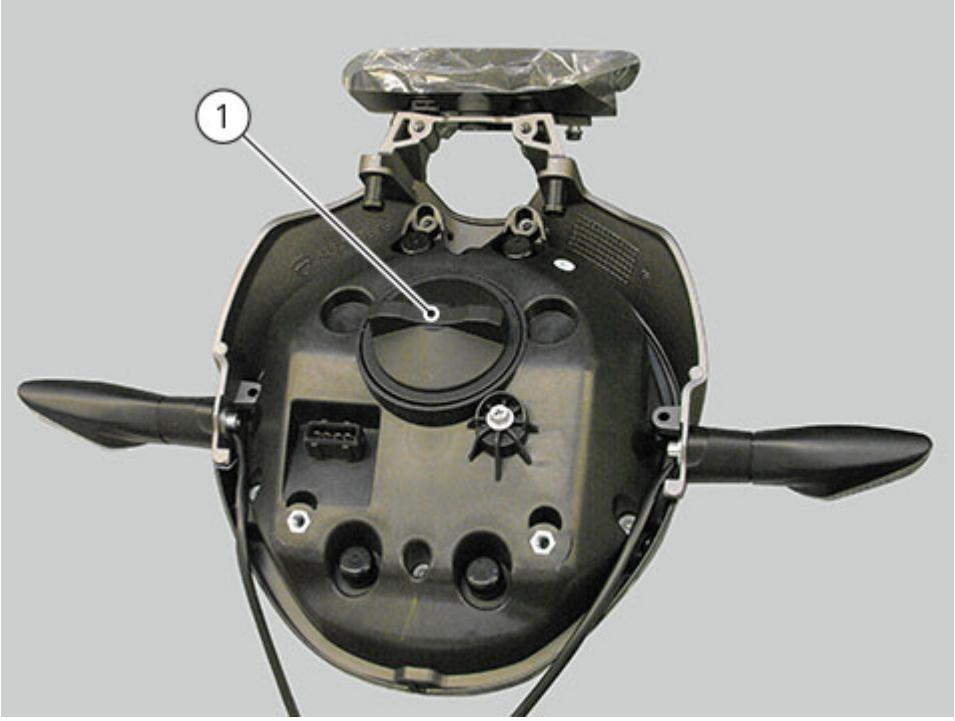

Low beam/High beam (3).
Release clip (2) and slide out the low/high beam bulb of headlight (3).



Parking light (4)

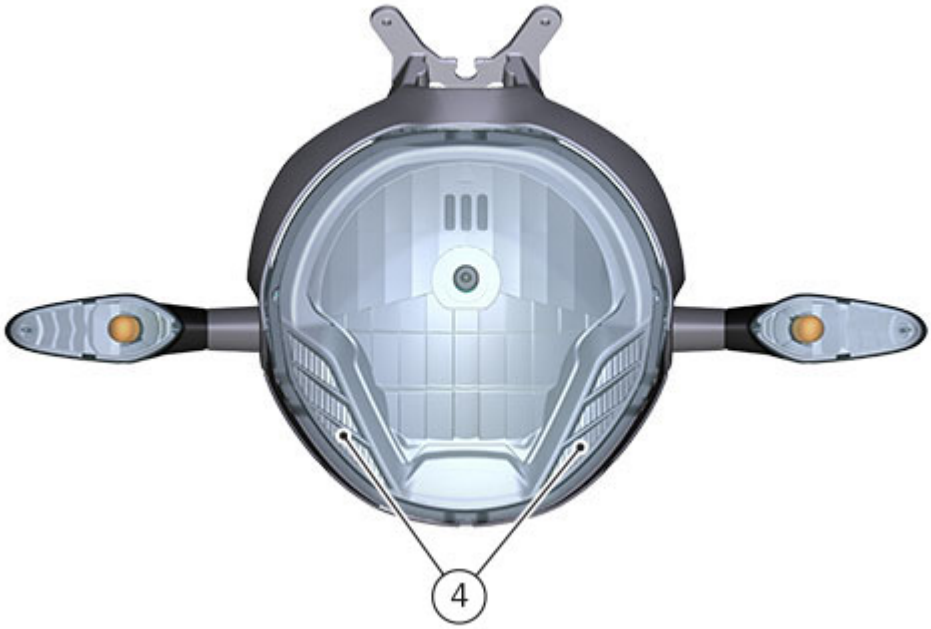

Note

LED parking light. When replacing the parking light, it will be necessary to replace the headlight.

Headlight

To remove headlight, refer to the procedure "Removing the light assembly".

Checking the indicators and lights

Vehicle features LED devices for non-USA versions, while USA versions feature standard bulbs.
For removal, refer to chapters "Removing the light assembly" for front turn indicators and "Removing the number plate holder" for rear turn indicators.

Right-hand switch

In case of malfunction, check for faulty parts in the system.
To disassemble and reassemble right-hand switch (1), see chapters "Removing the handlebar" and "Refitting the handlebar".

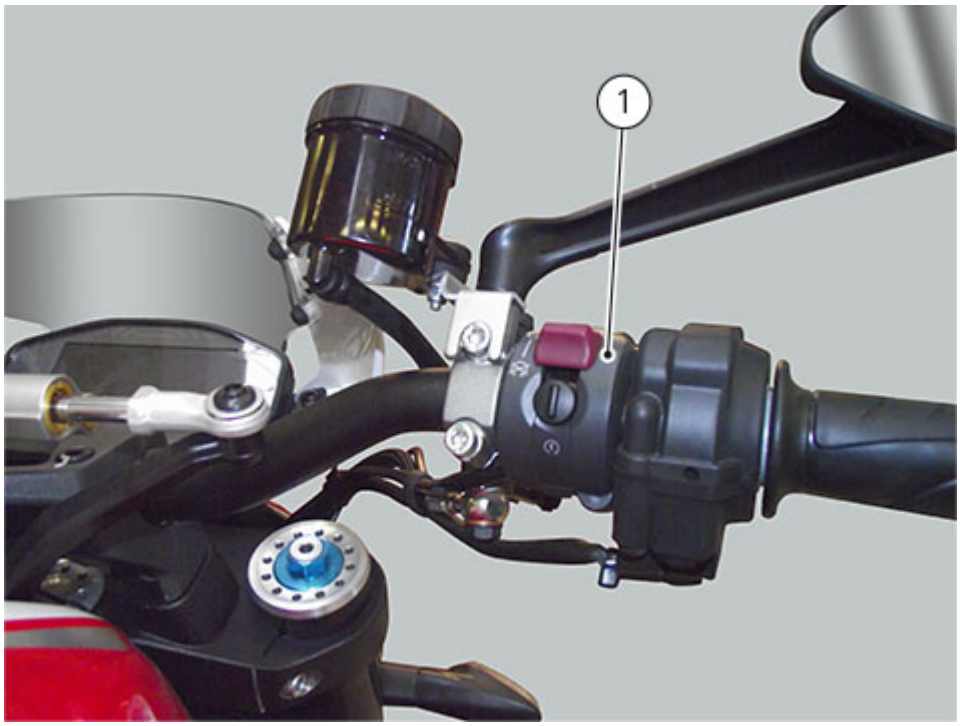

CHECKS

Check control unit correct operation with the DDS 2 diagnosis instrument connected to control unit diagnostic socket (A), which is positioned inside electrical components compartment; to reach it, remove the seat.

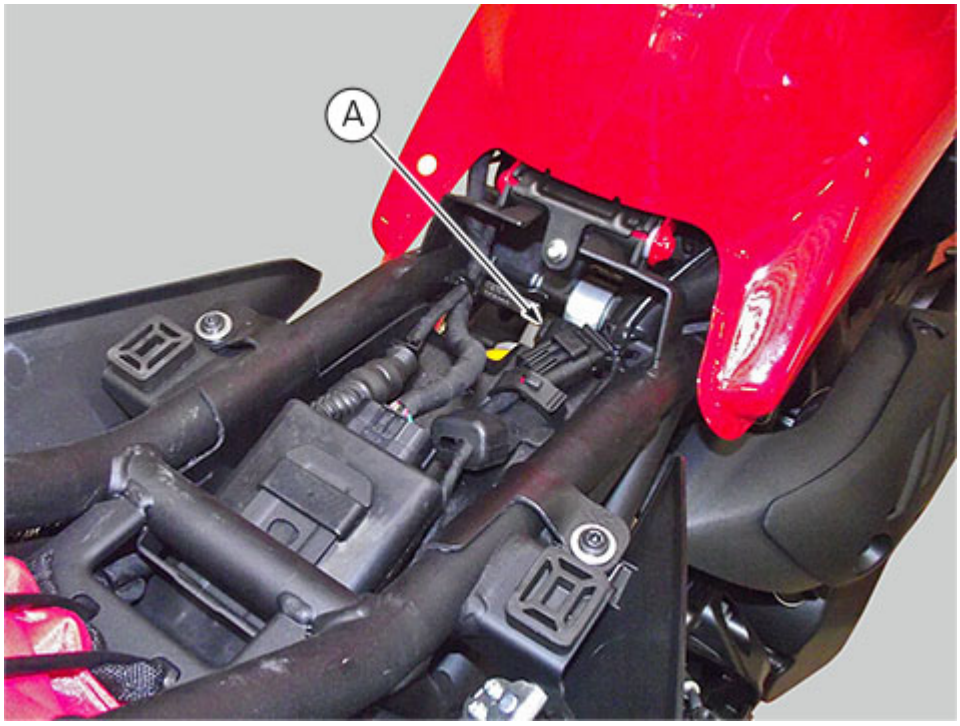

Left-hand switch

In case of malfunction, check for faulty parts in the system.
To disassemble and reassemble left-hand switch (1), see chapters "Removing the handlebar" and "Refitting the handlebar".

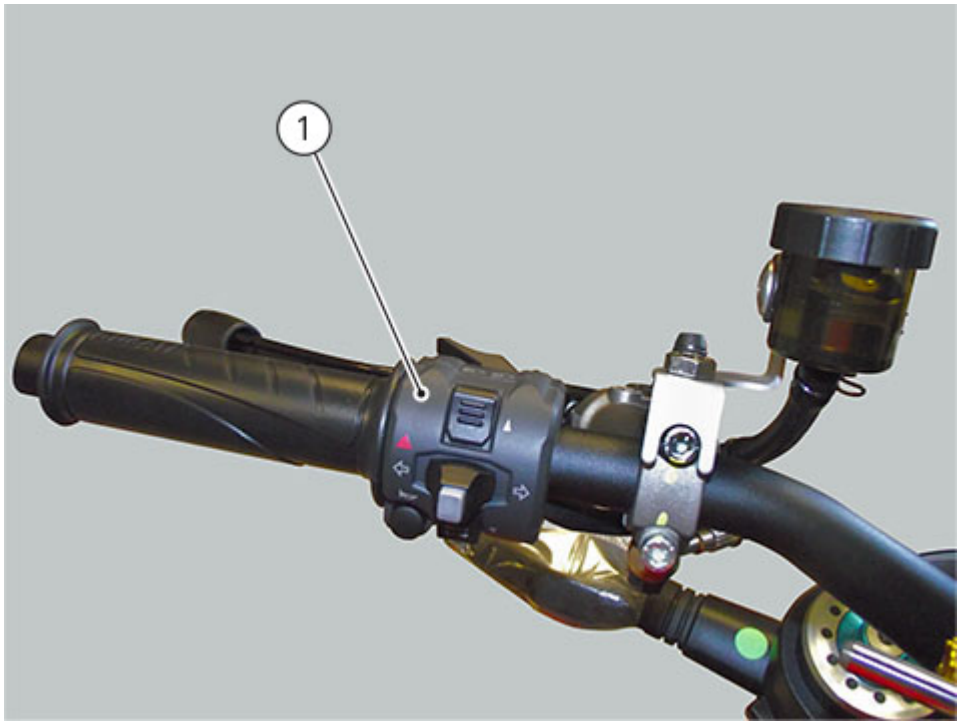

CHECKS

Check control unit correct operation with the DDS 2 diagnosis instrument connected to control unit diagnostic socket (A), which is positioned inside electrical components compartment; to reach it, remove the seat (Removing the seat).

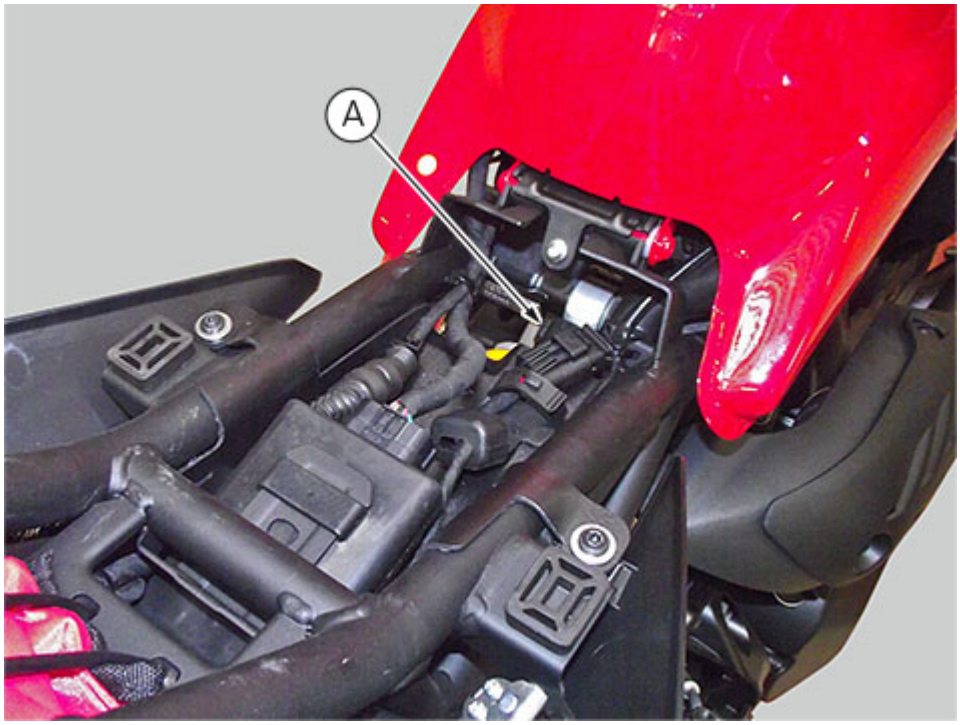

Horn

Supply 12V (battery) to the two fastons.
With a multimeter connected between the two poles (threaded pins) of the solenoid starter, check for electric continuity.
If there is no electric continuity, ensure that the terminals are not oxidised and apply water repellent spray.
Change the horn if the malfunction persists.

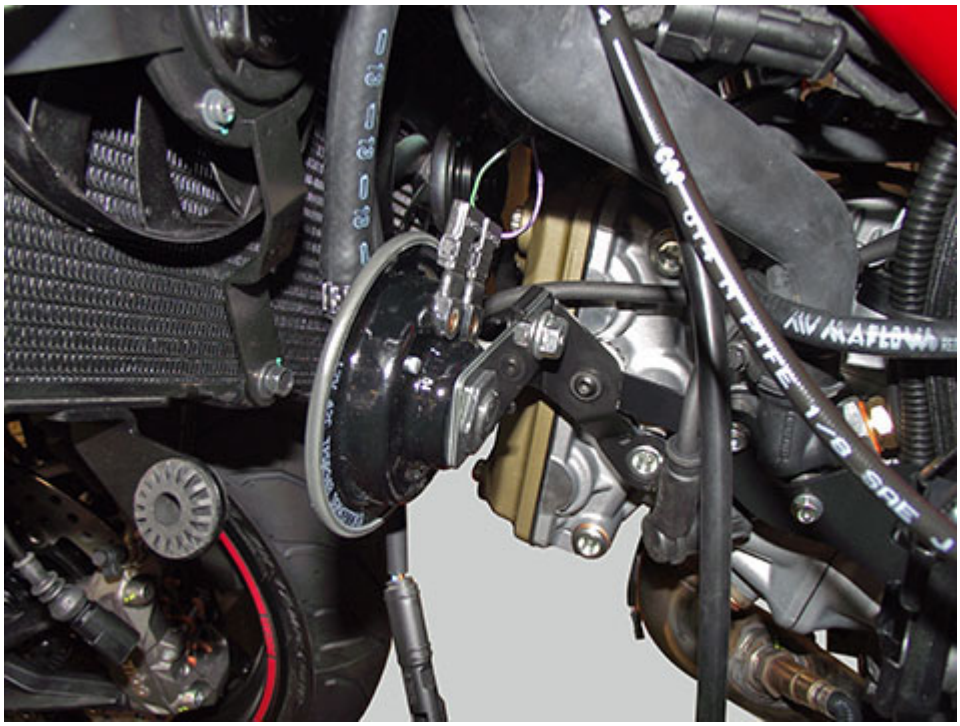

ELECTRIC DIAGRAM

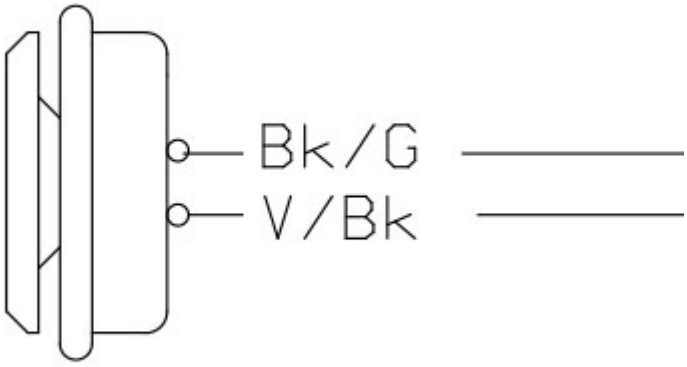

Checking the fuses

Electric components are protected by eleven fuses located in the two fuse boxes.
In each fuse box (A) and (B) there are three spare fuses.

FUSE BOXES (A) and (B)

The fuse boxes (A) and (B) are located in the electrical components compartment, under the seat.
Remove seat as described in paragraph "Removing the seat".
To expose the fuses, lift the box protective covers. Mounting position and ampere capacity are marked on box cover.

Refer to the table below to identify the circuits protected by the various fuses and their ratings.

Fuse box (A)

Fuse box (A) key		
Pos	El. item	Rat.
1	Lights	5 A
2	Instrument panel	10 A
3	Key-1	10A
4	Key-2	15
5	Relay	20A
6	Control unit	5A
7	BBS	10A
8	Spare	10A
9	Spare	20A
10	Spare	15A

Fuses 8, 9, 10 are spare fuses

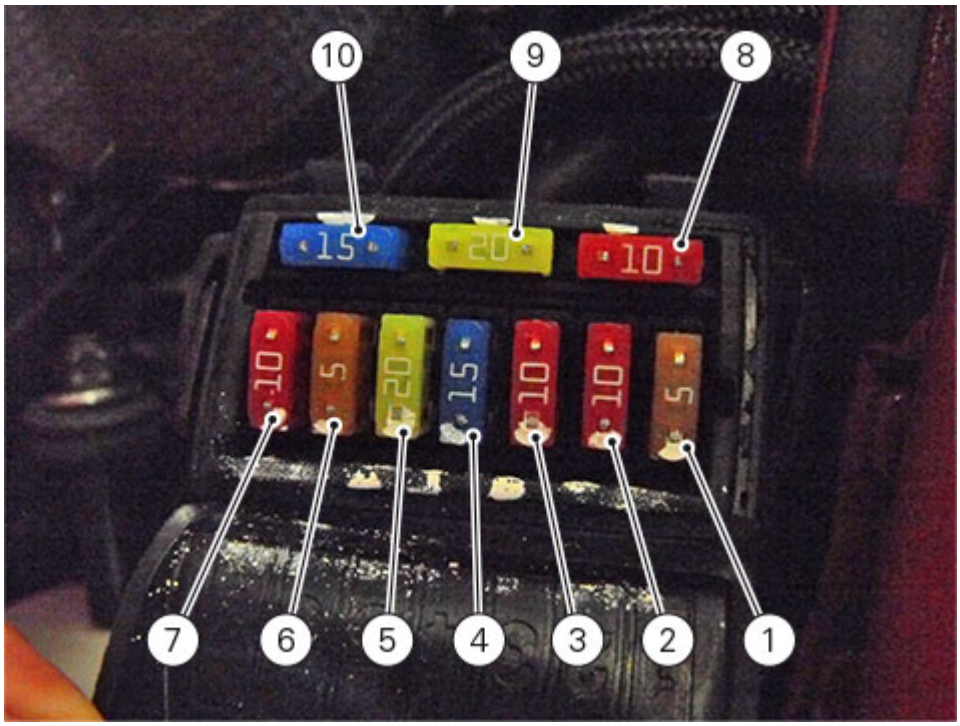

ELECTRIC DIAGRAM

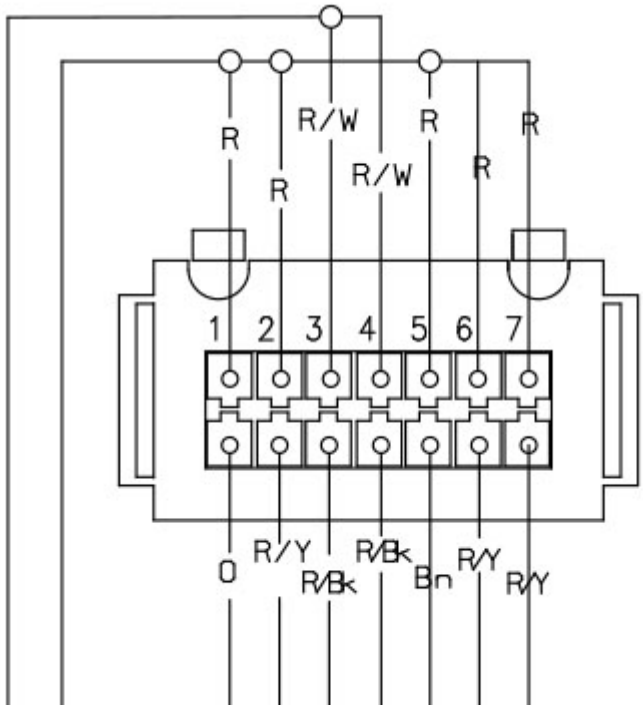

Fuse box (B)

Fuse box (B) key		
Pos	El. item	Rat.
1	Optional key	7.5A
2	Alarm	5A
3	Stop	5A
4	Diagnostics	3A
5	Spare	7.5A

6	Spare	25A
7	Spare	30A

Fuses 5, 6, 7 are spare fuses

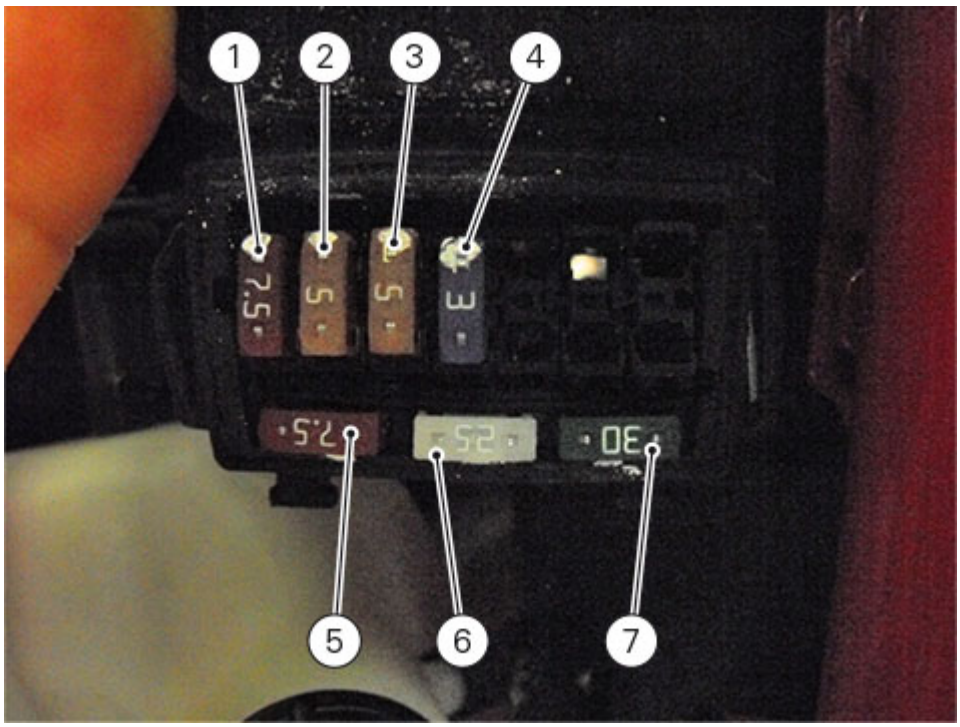

ELECTRIC DIAGRAM

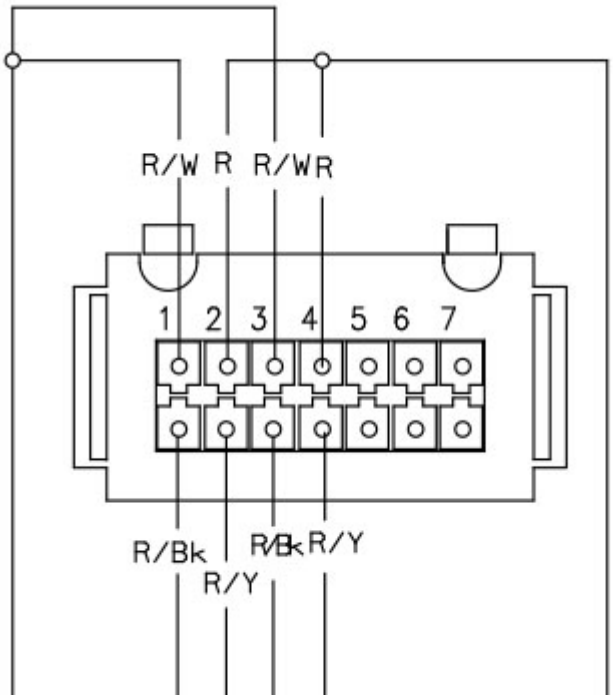

MAIN FUSES

To reach the main fuses and the ABS fuses, remove the seat, as described in paragraph "Solenoid starter".
The two main fuses (A) are located on solenoid starter (B).
Remove the fuse protection cap (C) to reach the fuses.
Near the solenoid starter there are two fuses: a 25 A (D) fuse and a 30 A (E) one.

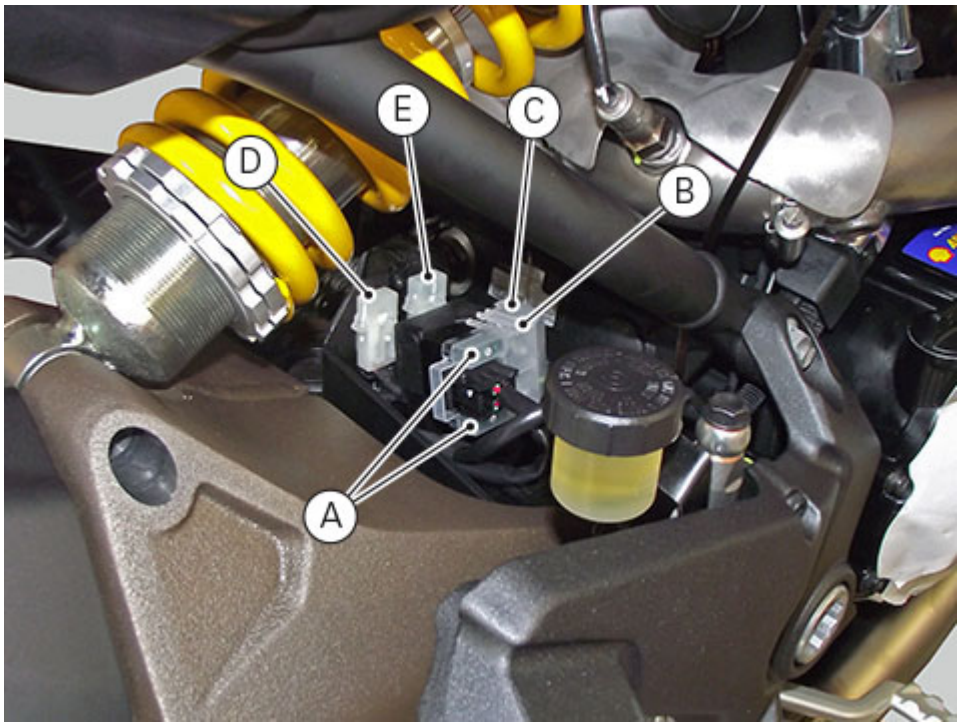

Main fuses key		
Pos	El. item	Rat.
TOP	Regulator protection	30A
TOP	Regulator protection	30A
SIDE	ABS	30A
SIDE	ABS	25A

ELECTRIC DIAGRAM

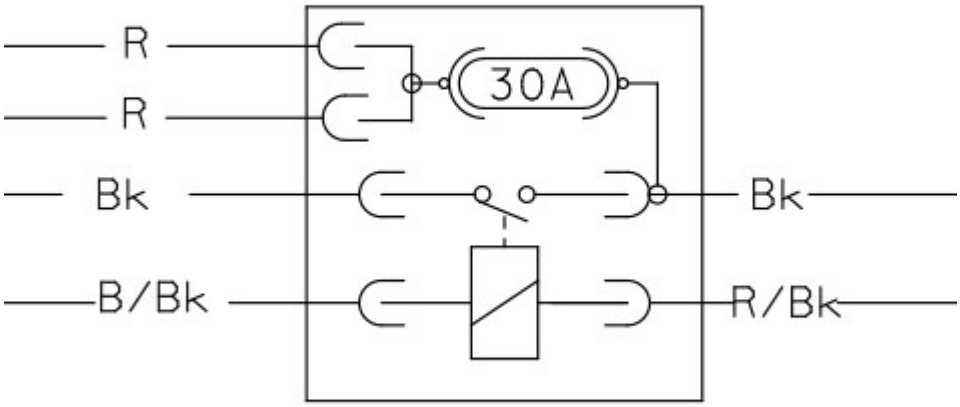

Important

Before replacing a damaged fuse with a new one of the same rating, identify the cause of the problem.

A blown fuse can be identified by breakage of the inner filament (F).

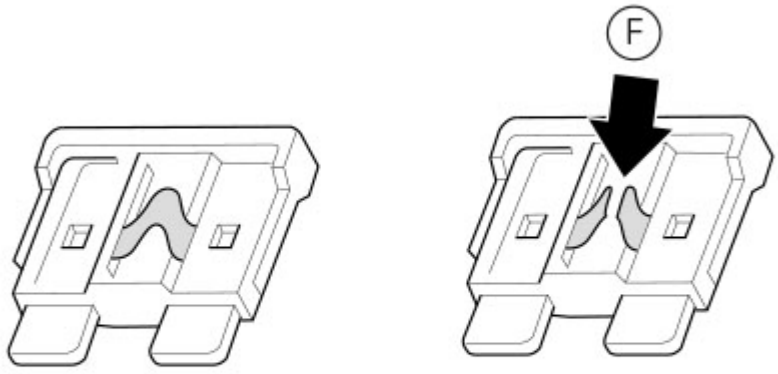

Important
Switch the ignition key to OFF before replacing the fuse to avoid possible short-circuits.

Warning
Never use a fuse with a rating other than the specified value. Failure to observe this rule may damage the electric system or even cause fire.

Side stand switch

The side stand switch (1) is located on the side stand ball joint and provides the side stand position information to the control unit.
The detected signal is sent to the control unit, which shares it with the instrument panel through connector (2).

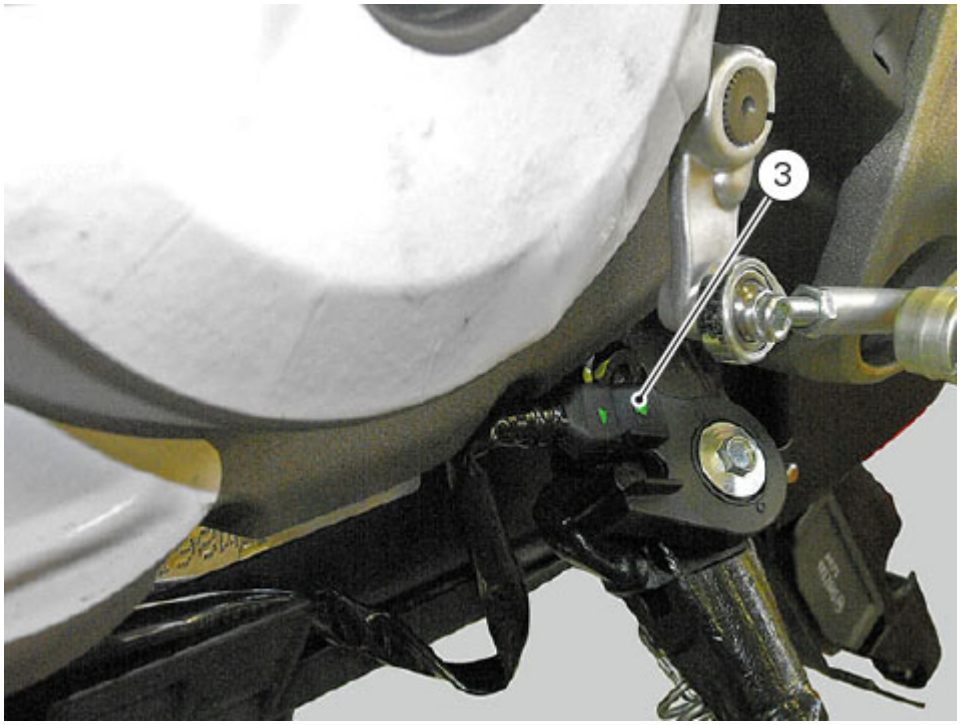

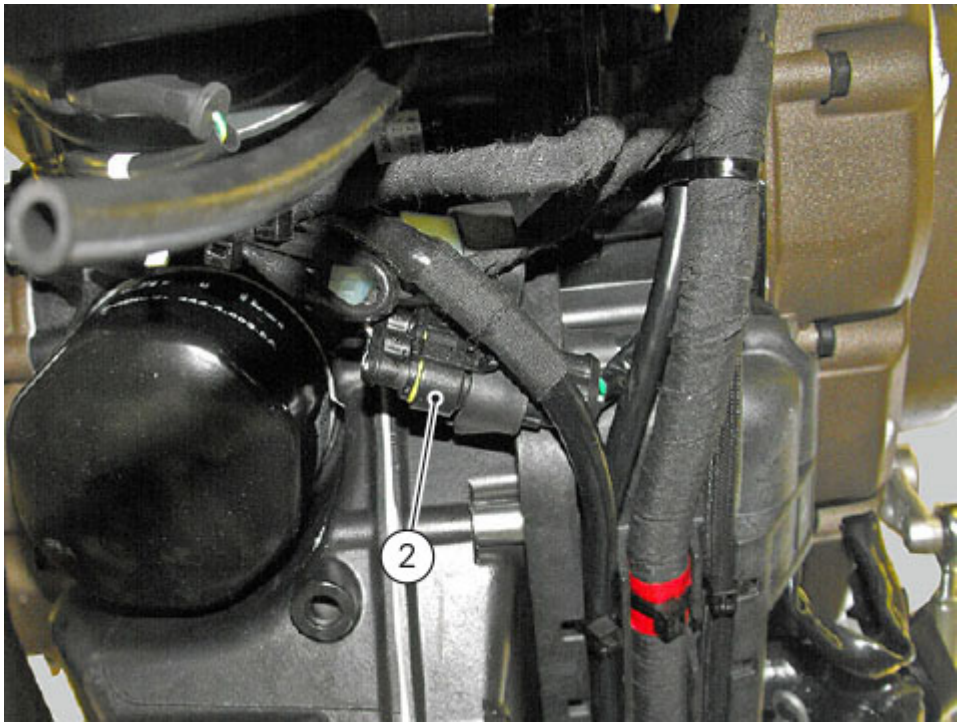

CHECKS

Check control unit correct operation with the DDS 2 diagnosis instrument connected to control unit diagnostic socket (A), which is positioned inside electrical components compartment; to reach it, remove the seat (Removing the seat).

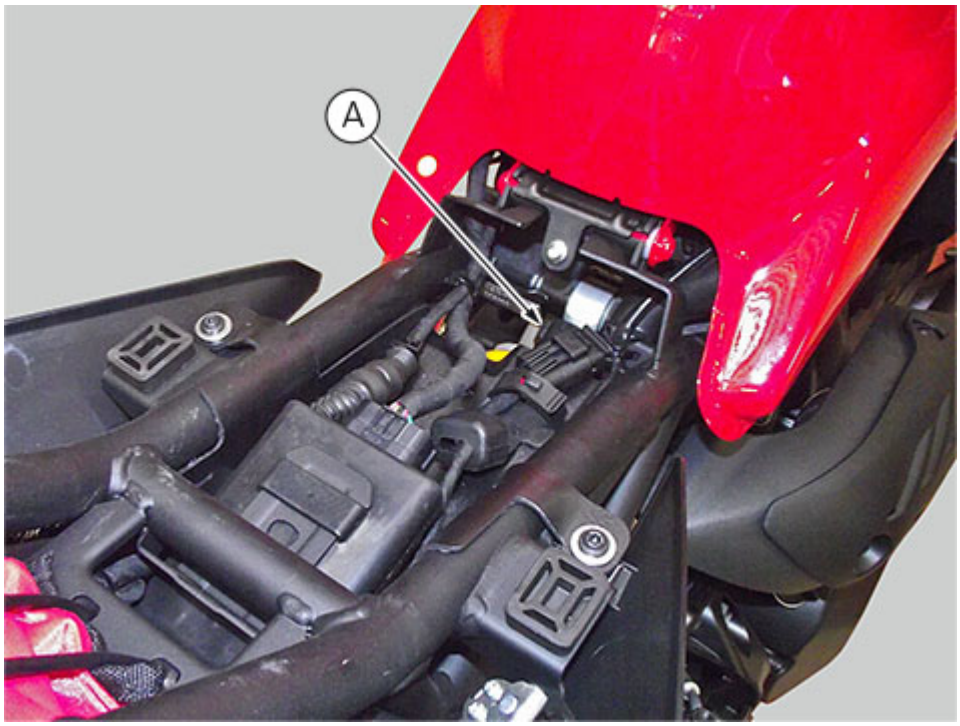
A

Air temperature sensor

The air temperature sensor (1), located on vehicle front part, detects the ambient temperature.
The detected signal is sent to the control unit, that shares it with the instrument panel; this allows performing map corrections if necessary.



CHECKS

Check control unit correct operation with the DDS 2 diagnosis instrument connected to control unit diagnostic socket (A), which is positioned inside electrical components compartment; to reach it, remove the seat.

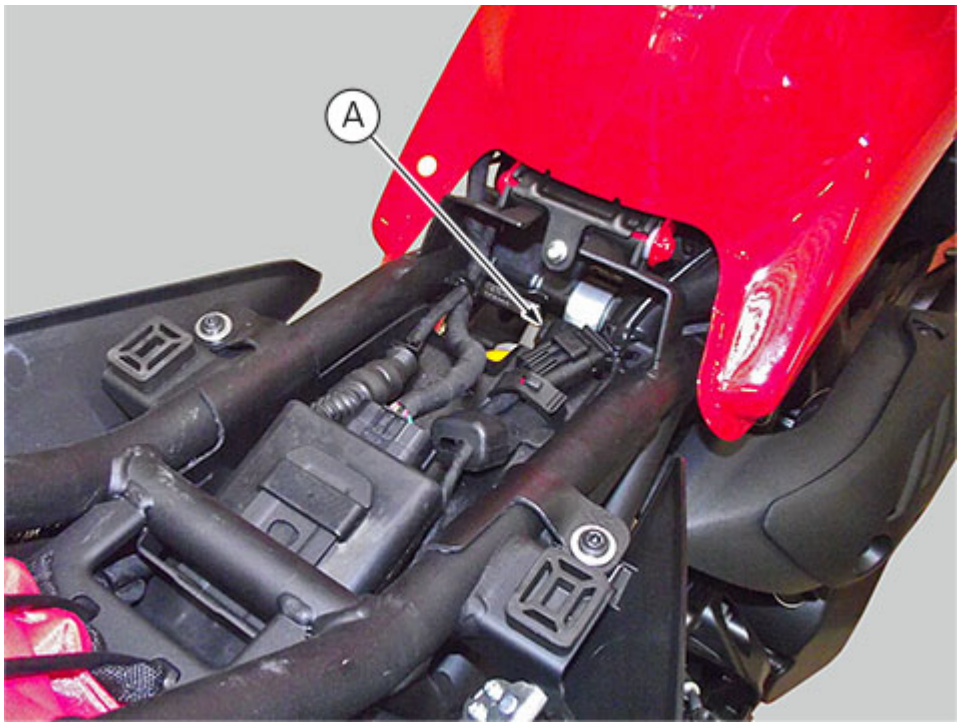

After selecting the proper items on the DDS 2 menu, read the external air temperature value among the different displayed parameters and compare it with the actual value.
Change the sensor if reading is incorrect.

ELECTRIC DIAGRAM

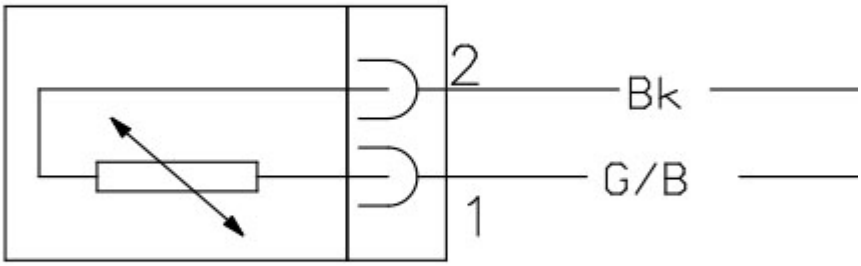
2
Bk
G/B
1

Engine temperature sensor

The coolant temperature sensor (1) outputs the electric signal to the engine control unit, which shares it with the instrument panel through the CAN line.



CHECKS

Check control unit correct operation with the DDS 2 diagnosis instrument connected to control unit diagnostic socket (A), which is positioned inside electrical components compartment; to reach it, remove the seat.

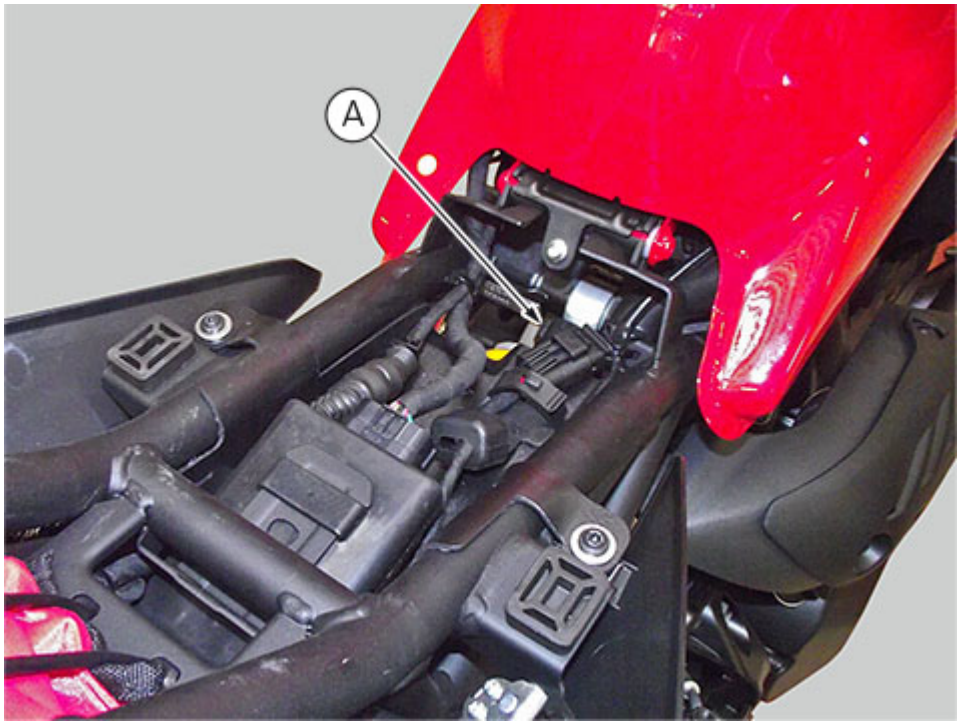

After selecting the proper items on the menu, read the engine coolant temperature value among the different displayed engine parameters:

- with cold engine, the air temperature detected with the DDS 2 shall be similar to the coolant one;
- with hot engine and cooling fan just triggered, coolant temperature value shall be similar to the one required for activating the electric fan.

Should the outcomes of these tests be negative, replace the engine coolant temperature sensor (1).

Should the DDS 2 detect an error such as "coolant temperature sensor short circuit or open circuit" inside the control unit memory, check the electric system parts connecting sensor to control unit.

If this section of the electric system is not faulty (no open circuit, no short circuits, no short circuit to ground), replace the sensor.

ELECTRIC DIAGRAM

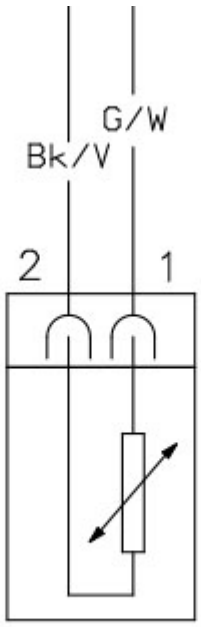

Clutch switch

To check operation of the clutch switch (1), use a multimeter: when the clutch lever is operated, there must be electric continuity between the terminals of the corresponding switch.



No electric continuity should be available when clutch is released.

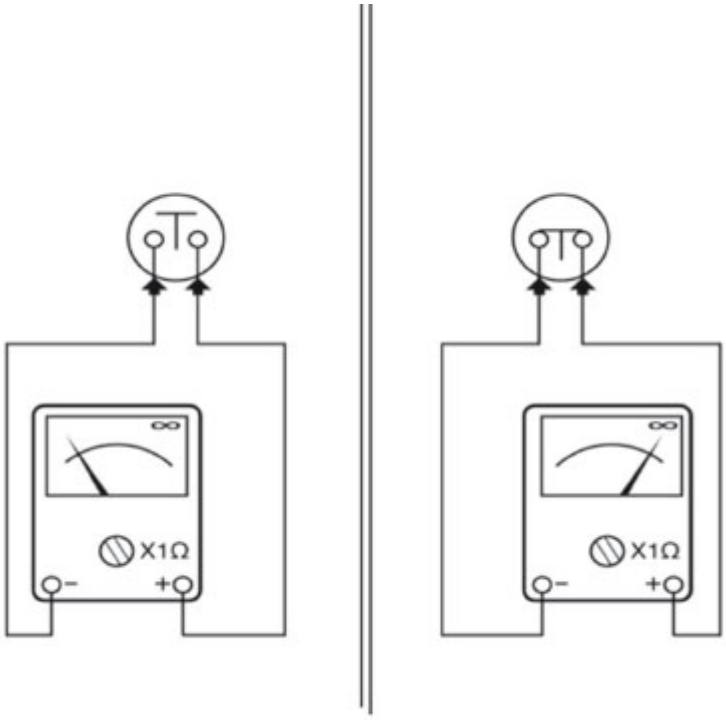

If these tests fail to produce positive results, the part in question must be replaced.

ELECTRIC DIAGRAM

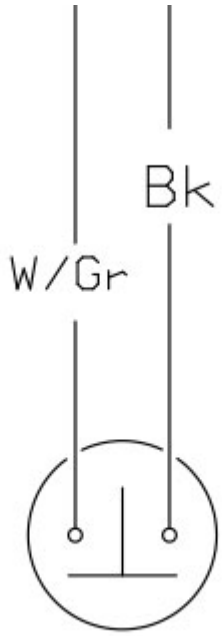
Bk
W/Gr

Oil pressure sensor

The oil pressure sensor (pressure switch) (1) is located in the front of the oil cooler.

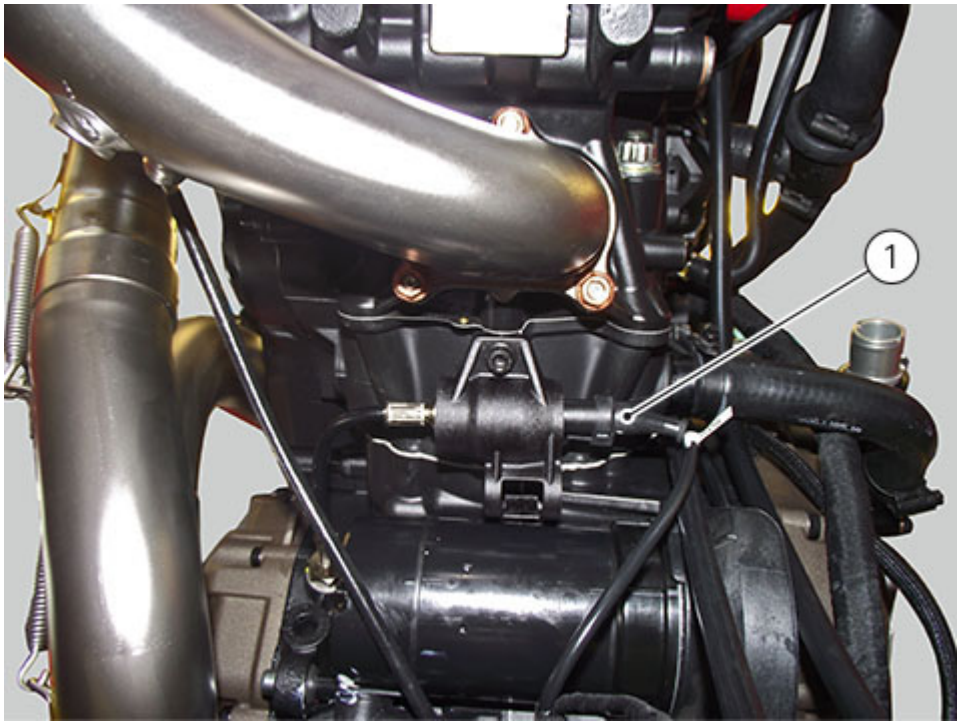

To test the operation of the engine oil pressure sensor (1), proceed as follows.
Use the diagnosis instrument DDS 2 to check that oil pressure in the engine lubrication circuit complies with the specified values.
If the engine oil pressure value is outside the specified range, check the lubrication circuit components and service as necessary.

Switch on the instrument panel without starting the engine, disconnect the electrical terminal from the pressure sensor and connect it to ground:

- if the warning light does not illuminate, this means the sensor is defective and must be replaced;
- if the warning light illuminates, start the engine;
- if the warning light does not turn off, check the DDS 2 system by connecting to connector (A) located in the electrical components compartment; to reach it, remove the seat.

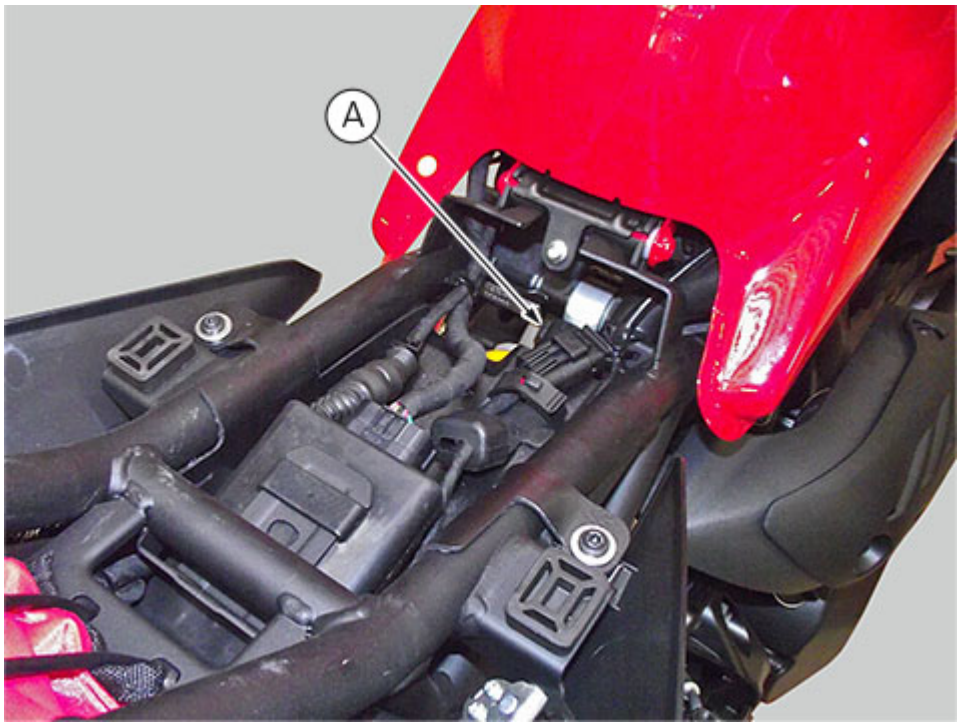

ELECTRIC DIAGRAM

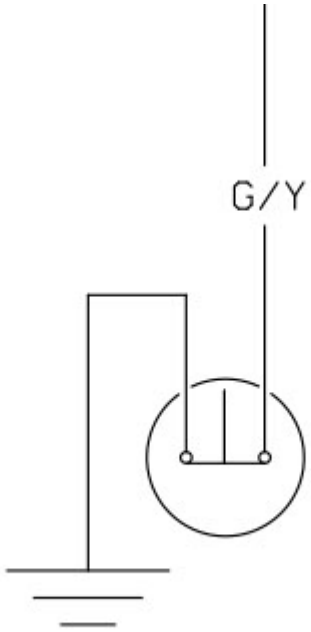

Gear/neutral sensor

The gear sensor (1) is positioned on the vehicle rear RH side.

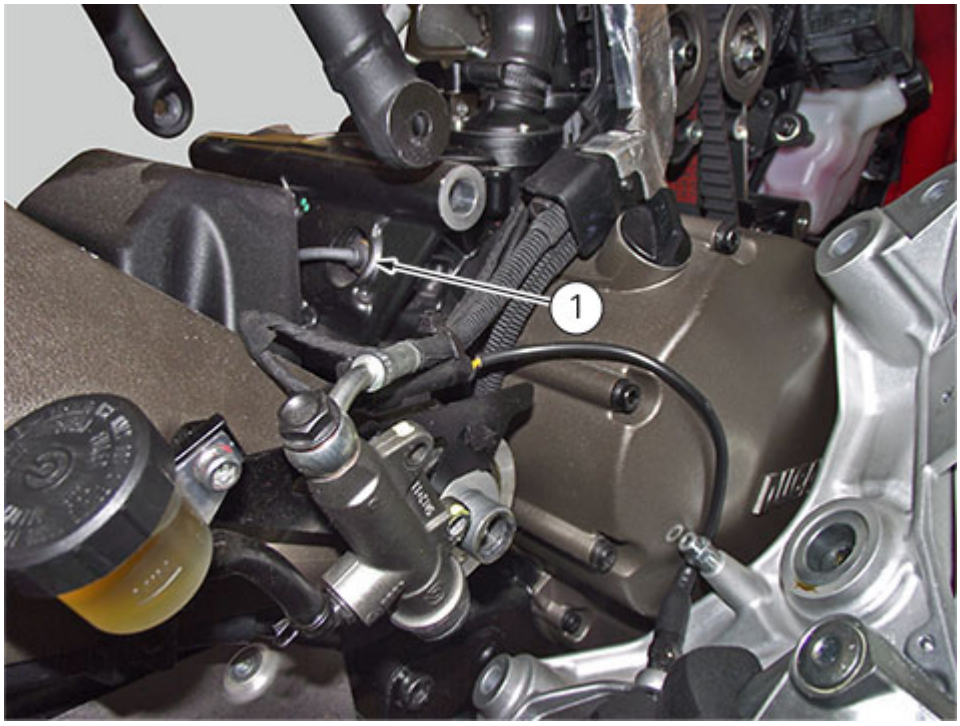

CHECKS

Check control unit correct operation with the DDS 2 diagnosis instrument connected to control unit diagnostic socket (A), which is positioned inside electrical components compartment; to reach it, remove the seat.

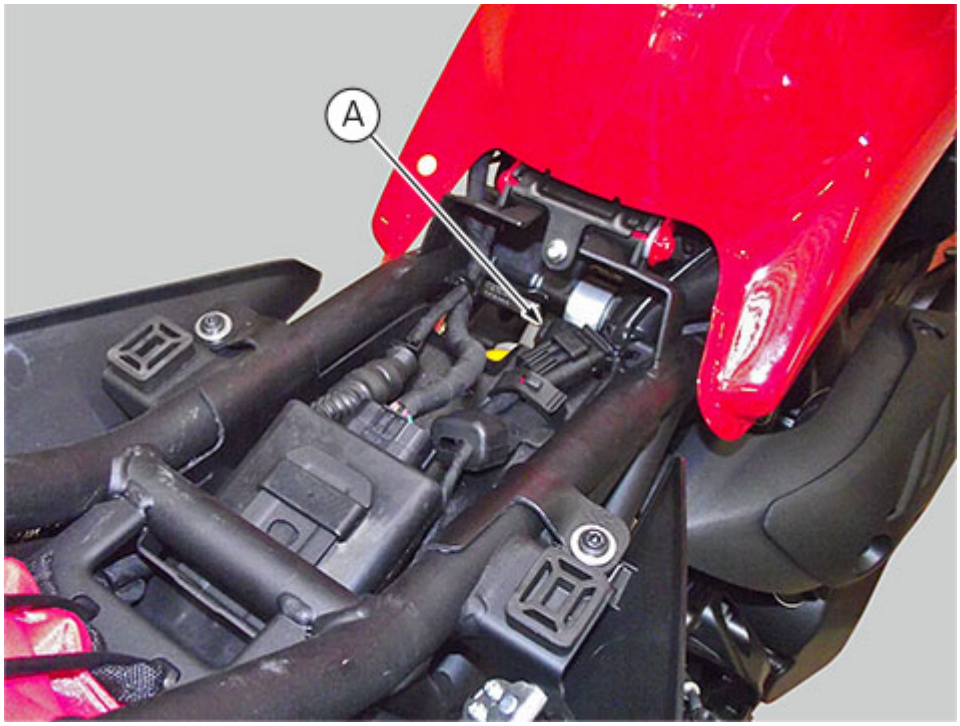

Rear stop switch

The rear STOP switch (1) is located inside the RH footpeg holder plate.

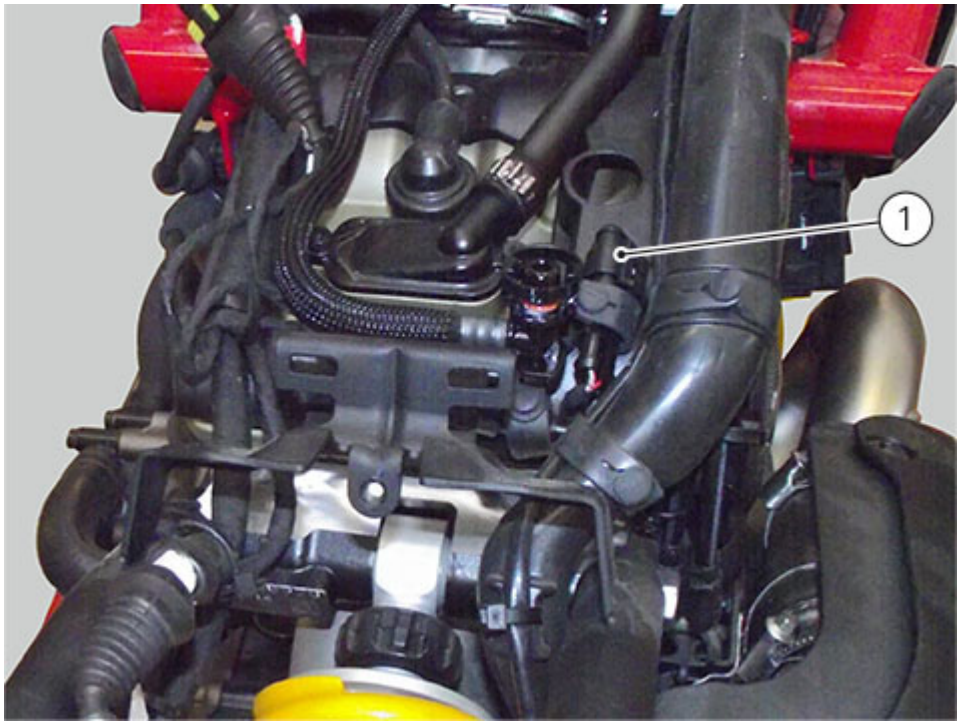

REAR STOP SWITCH CONTROL

To check operation of the rear (1) STOP switch, use a multimeter: when the rear brake lever is operated, there must be electric continuity between the terminals of the corresponding switch.

No electric continuity should be available when brakes are not operated.

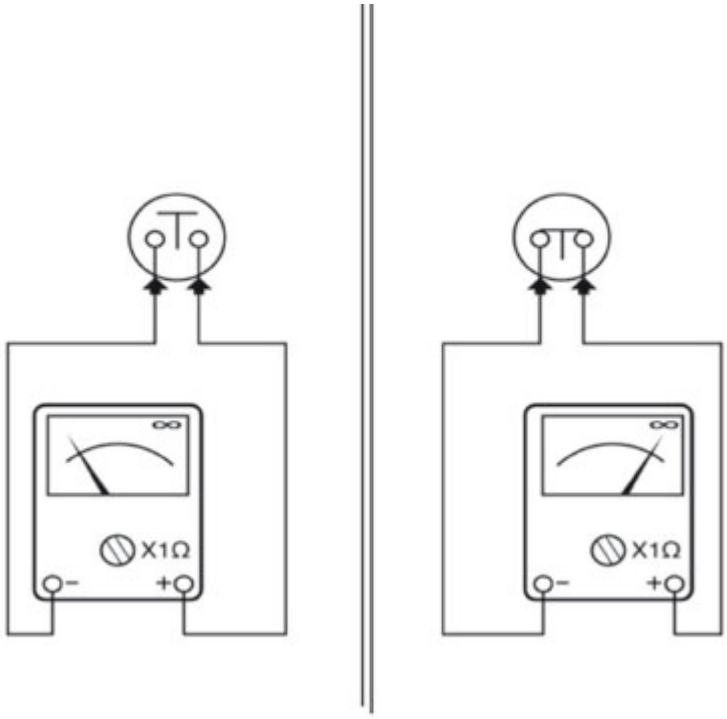

ELECTRIC DIAGRAM

If these tests fail to produce positive results, the part in question must be replaced.

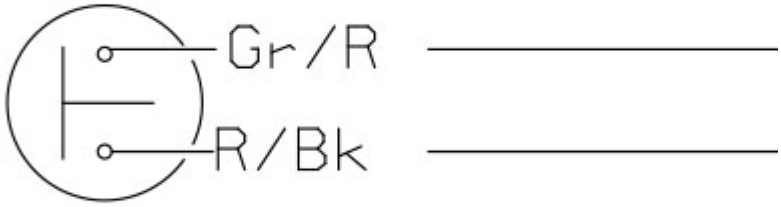
Gr/R
R/Bk

Front stop switch

The front STOP switch (1) is located on the front lever front side.

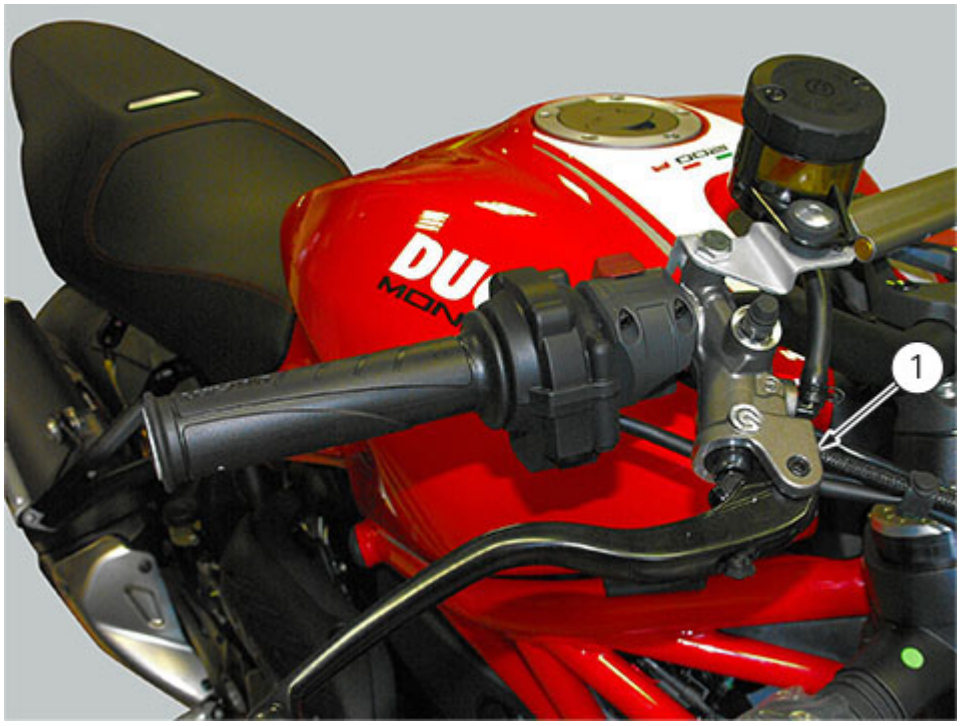

CHECKS

To check operation of the front (1) STOP switch, use a multimeter: when the front brake lever is operated, there must be electric continuity between the terminals of the corresponding switch.

No electric continuity should be available when brakes are not operated.

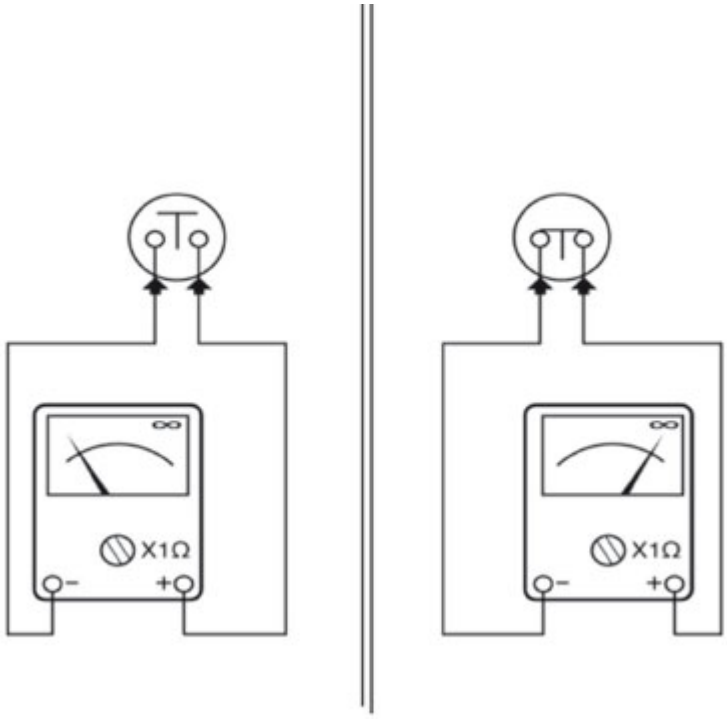

ELECTRIC DIAGRAM

If these tests fail to produce positive results, the part in question must be replaced.

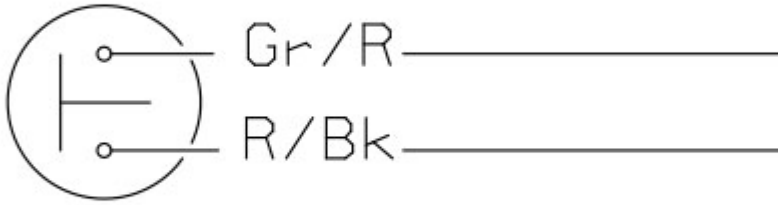
Gr/R
R/Bk

Exhaust valve motor

Remove the exhaust silencer (Removing the silencer).
To reach the exhaust valve motor, remove the electrical components compartment, as described in chapter "Removing the electrical components compartment".
Release exhaust valve motor cable as described in chapter "Removing the exhaust system".

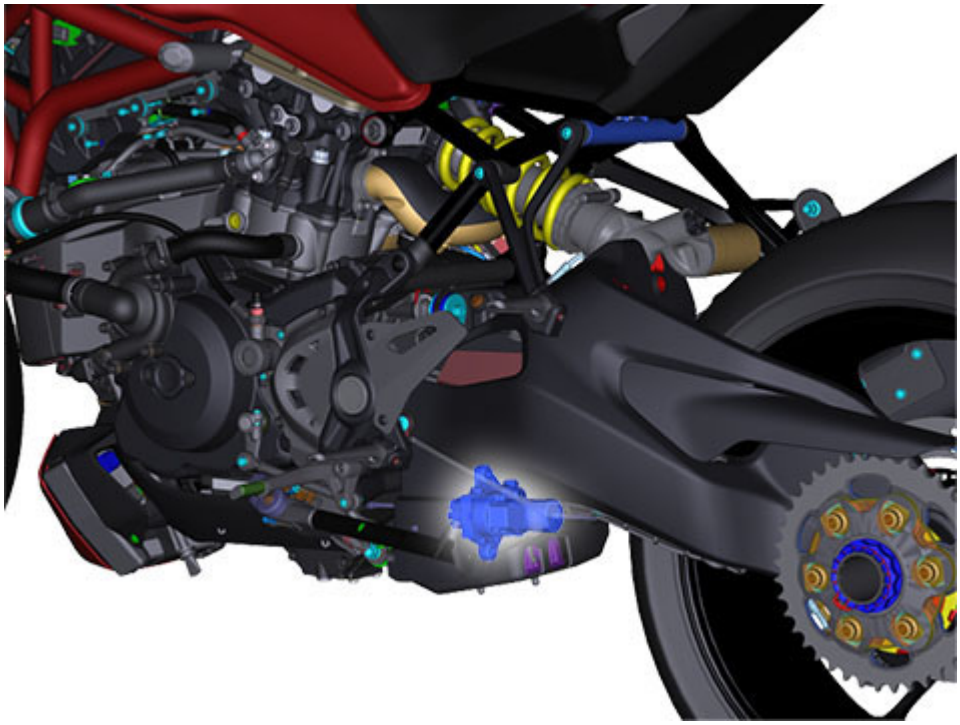

REMOVAL PROCEDURE

Remove the two screws (1) of exhaust valve motor support (2).

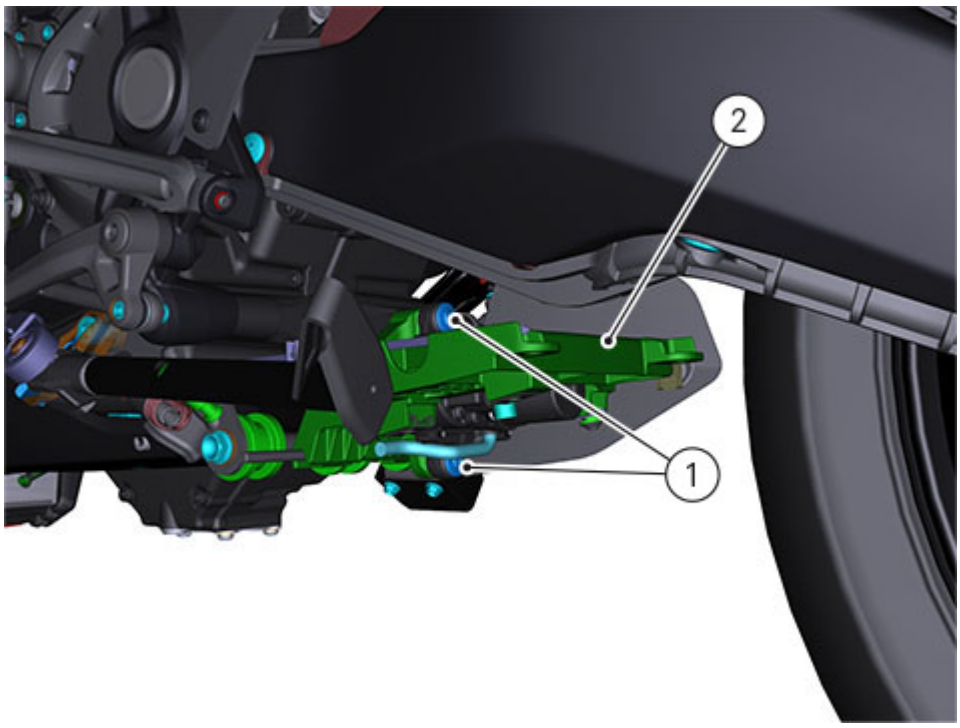

Disconnect exhaust valve connector (3) from wiring, and release it from tie (A).

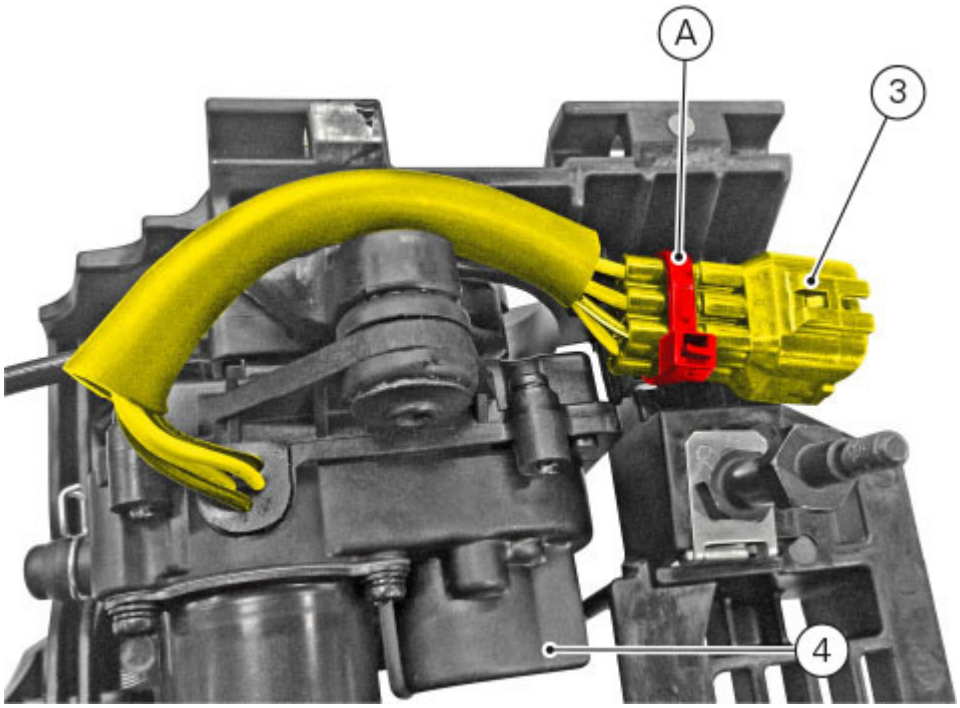

Separate exhaust valve motor (4) from its support (2).

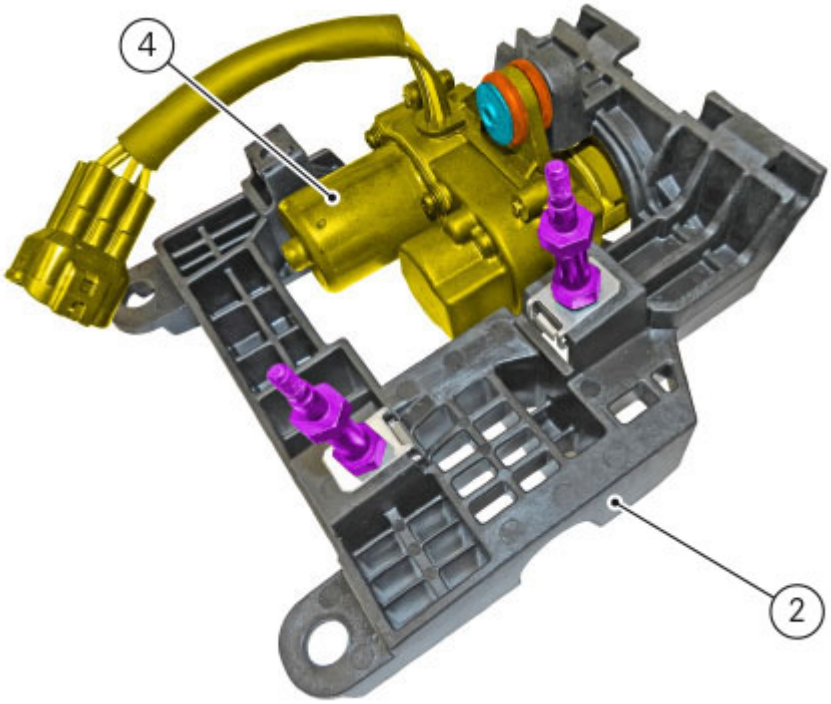

ASSEMBLY

Position exhaust valve motor (6) inside its support (2).
Fix the exhaust valve motor (4) with the two screws (1).
Tighten the two screws (1) to a torque of 5Nm±10%.

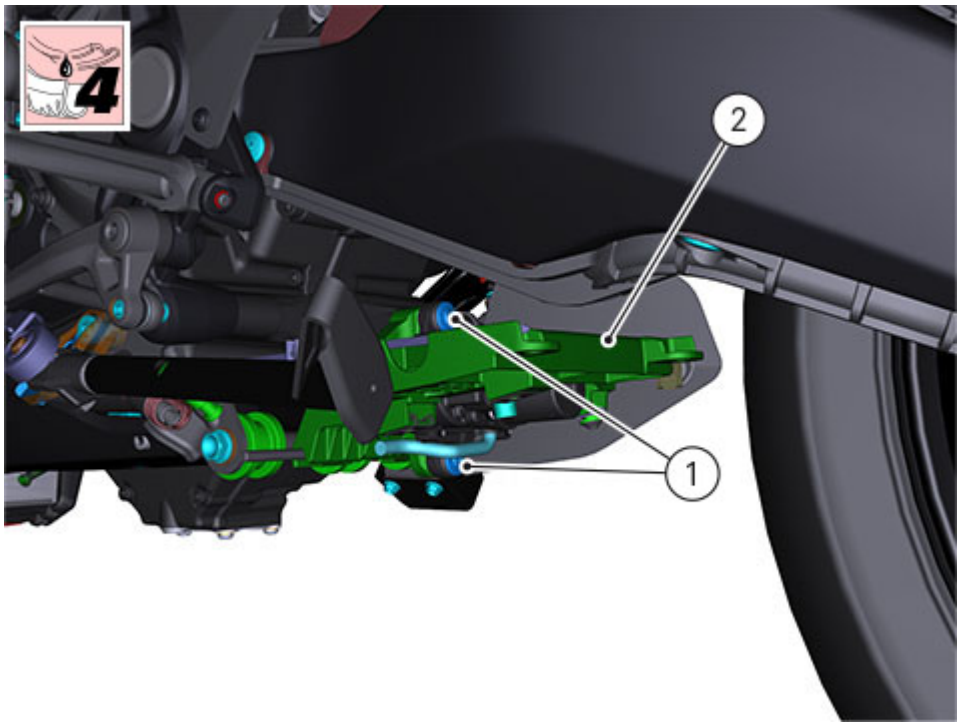

Connect exhaust valve connector (3) to wiring, and secure it with tie (A).

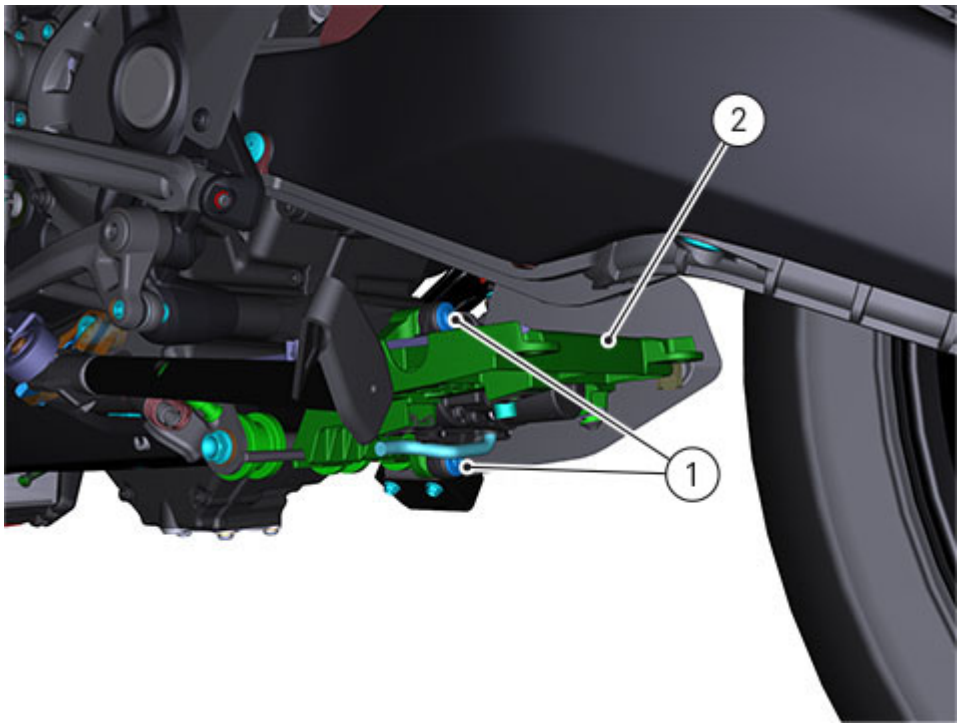

Refit the electrical components compartment (Refitting the electrical components compartment).
Refit the exhaust silencer (Refitting the silencer).

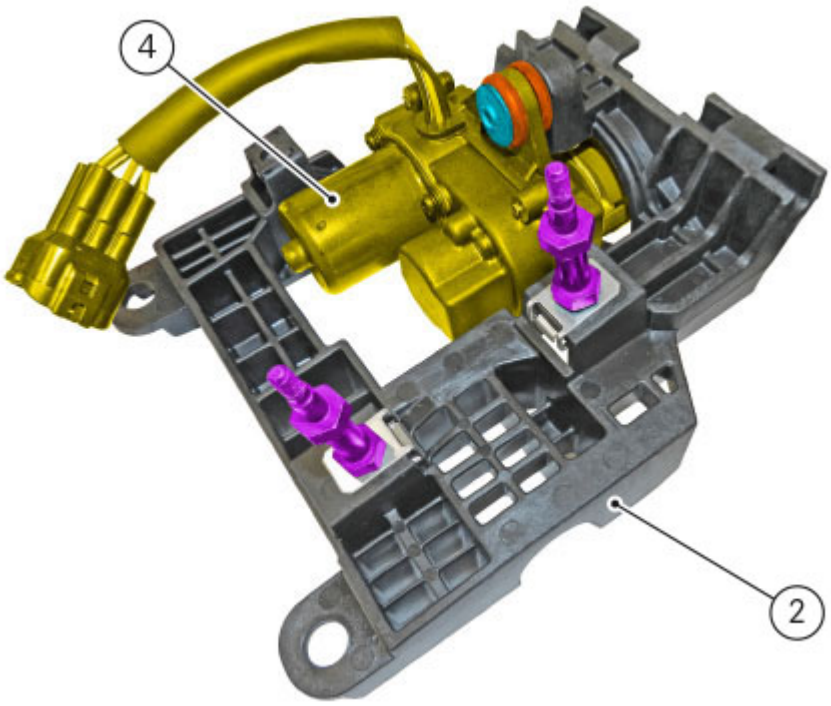

CHECKS

Check control unit correct operation with the DDS 2 diagnosis instrument connected to control unit diagnostic socket (A), which is positioned inside electrical components compartment; to reach it, remove the seat.

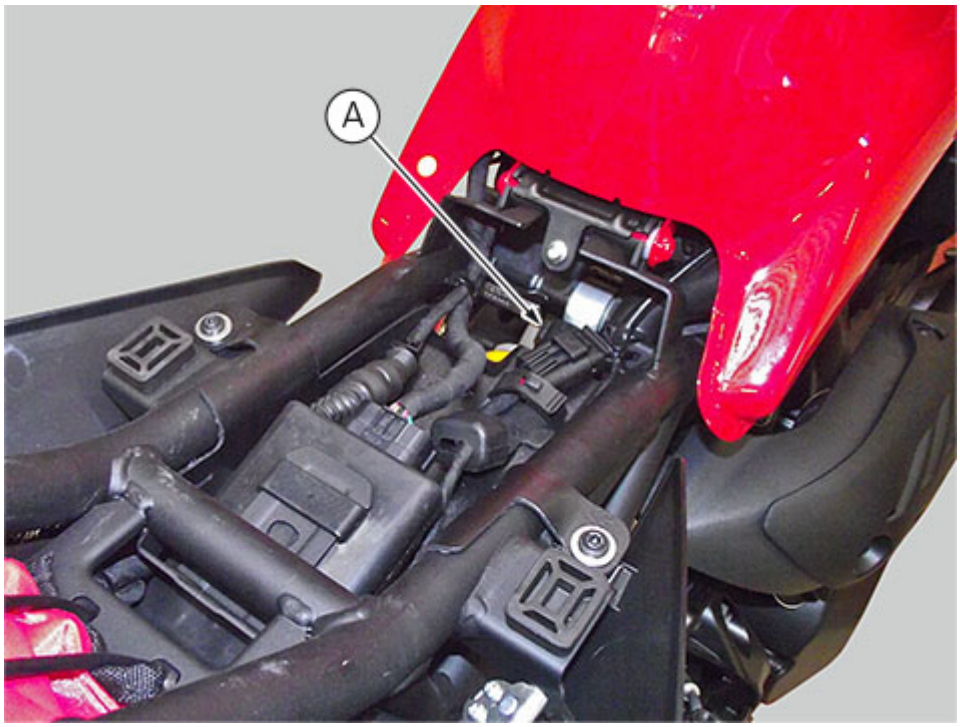

ELECTRIC DIAGRAM

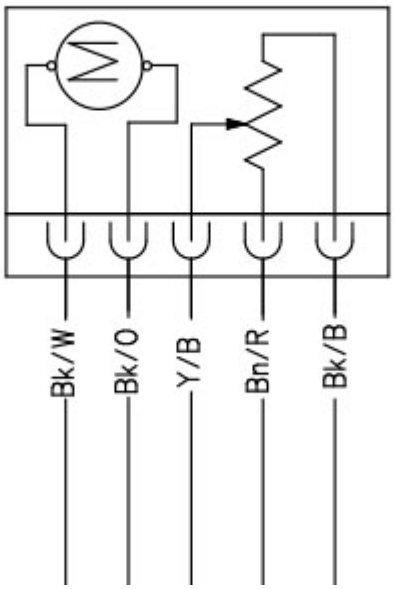
Bk/W
Bk/O
Y/B
Bn/R
Bk/B

Solenoid valves

The LH and RH solenoid valves are located on the rear side of the radiator and improve the coolant cooling when the temperature is high.
The solenoid valve activation parameters are defined by the water temperature sensors and controlled by the thermostat.
The operating parameters are indicated in chapter "Cooling system".

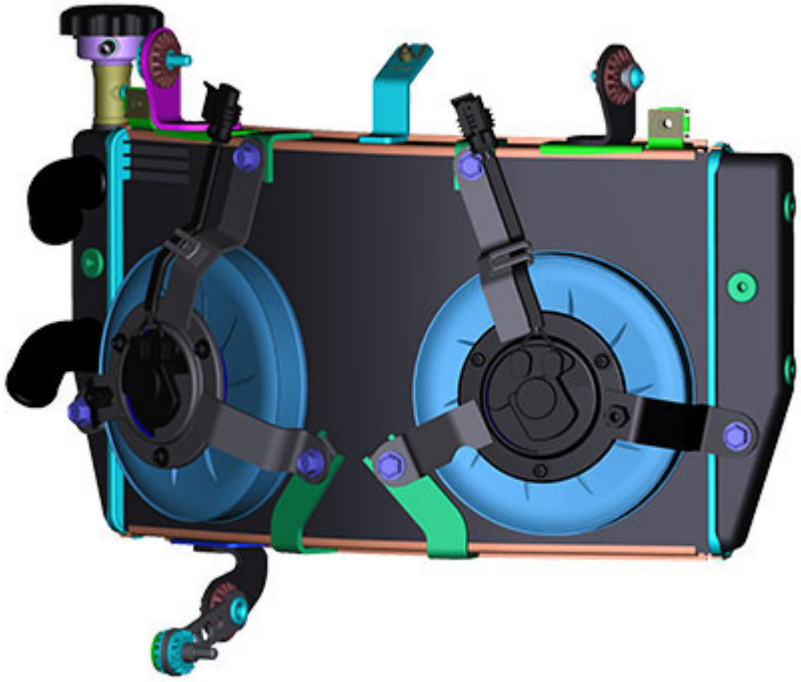

REMOVAL/REASSEMBLY

To work on the solenoid valves, move the radiator from the front side as described in chapters "Removing the radiator" and "Refitting the radiator".

CHECKS

With a multimeter connected between the two poles (threaded pins) of the solenoid starter, check for electric continuity.
If there is no electric continuity, ensure that the terminals are not oxidised and apply water repellent spray.
Change the solenoid valve if the malfunction persists.

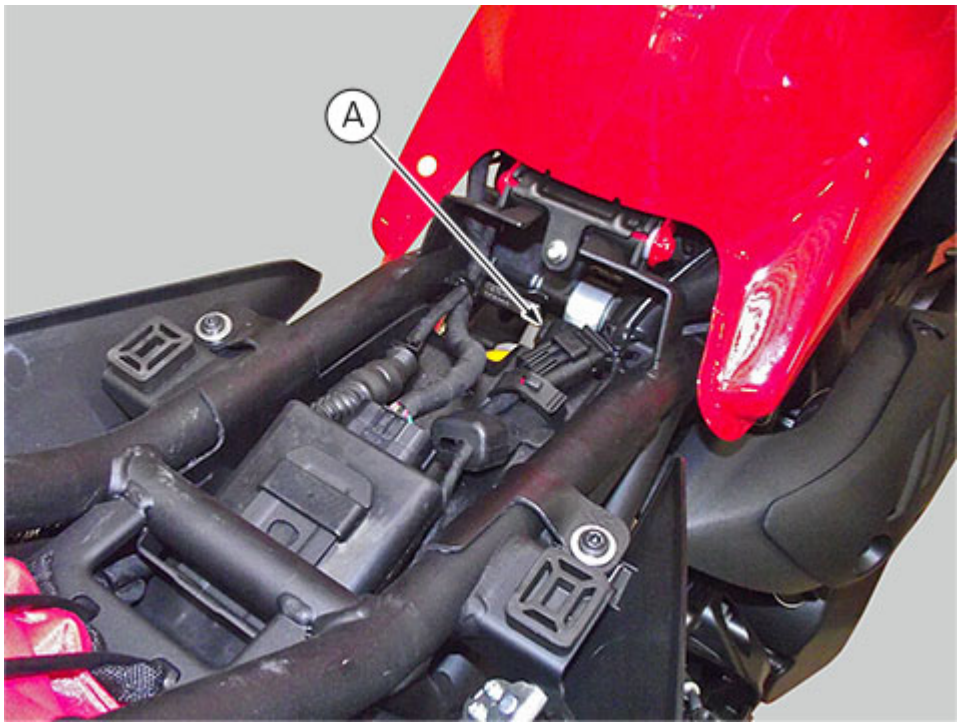

ELECTRIC DIAGRAM

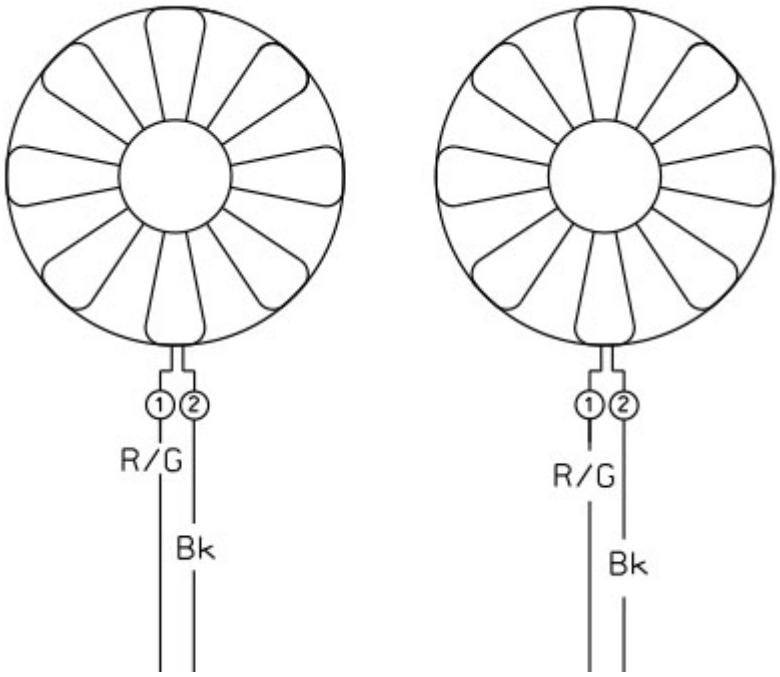

Coils

The ignition coil increases the input voltage of the current alternator and brings the voltage to a value that allows the spark creation in the spark plug.

The vehicle features two coils, one for the horizontal cylinder (1) and one for the vertical cylinder (2).

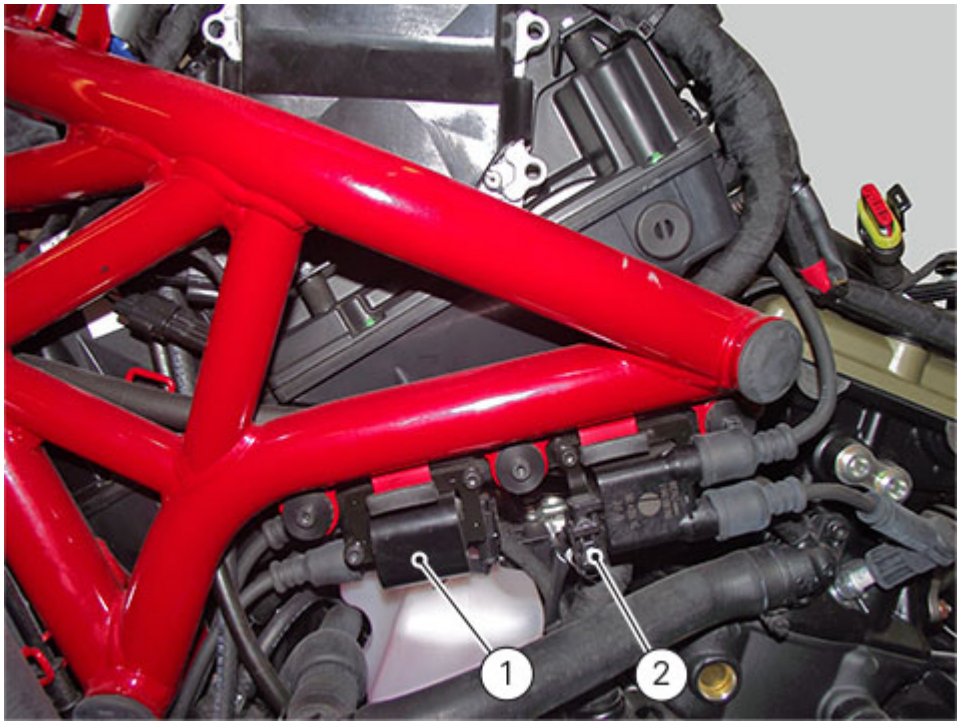

REMOVAL PROCEDURE

Remove the cover (3), loosening screws (4).

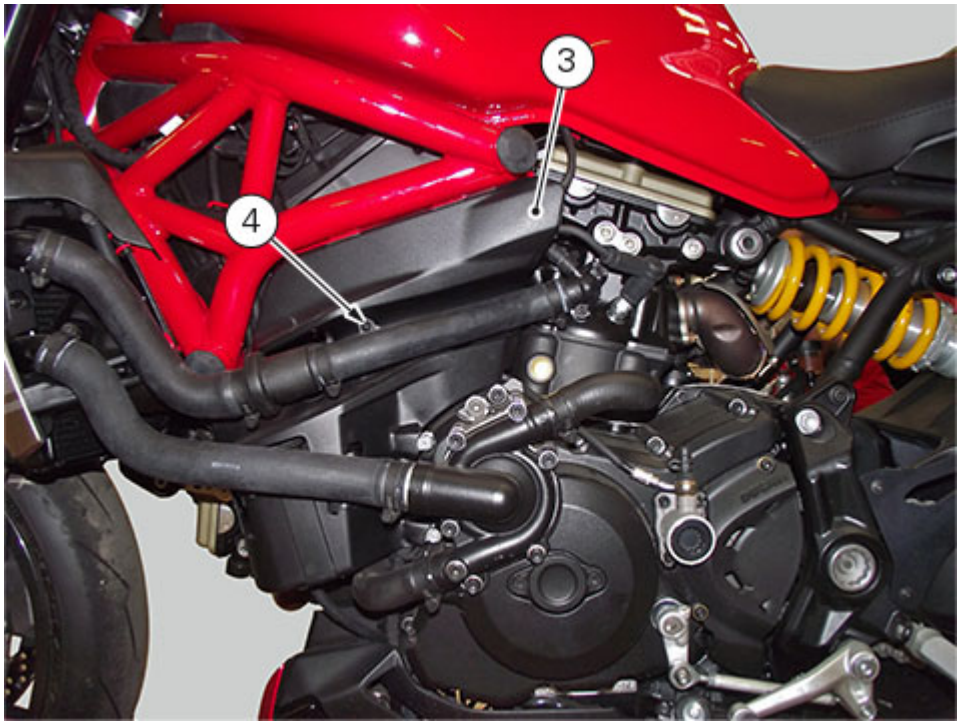

Disconnect the connector (5).
Disconnect caps as described in paragraph "Replacing the spark plugs".

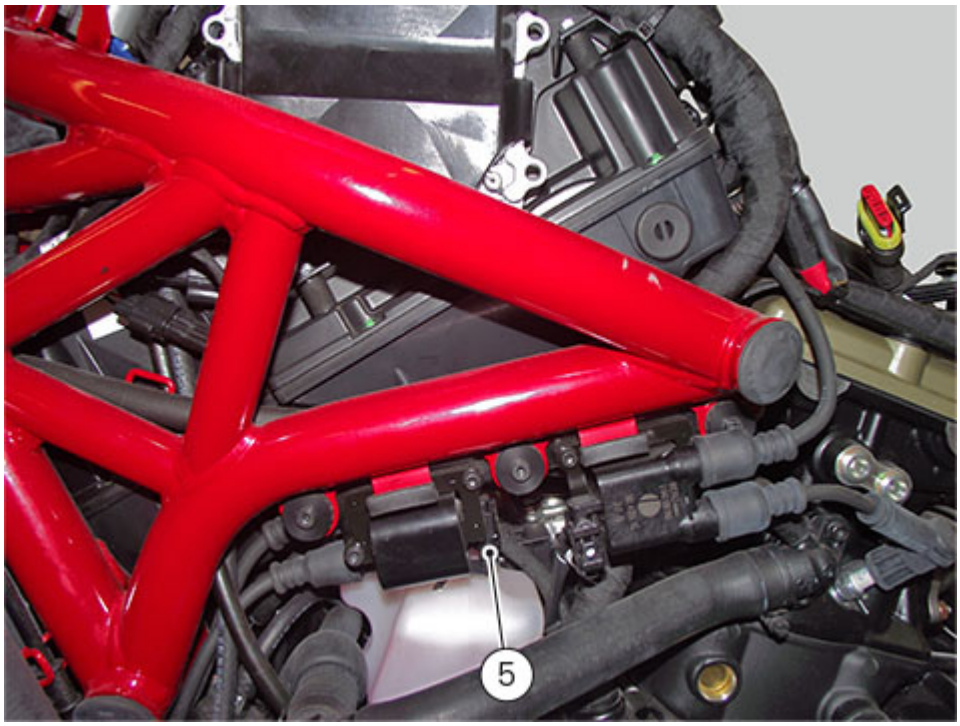

Disconnect the connector (6).

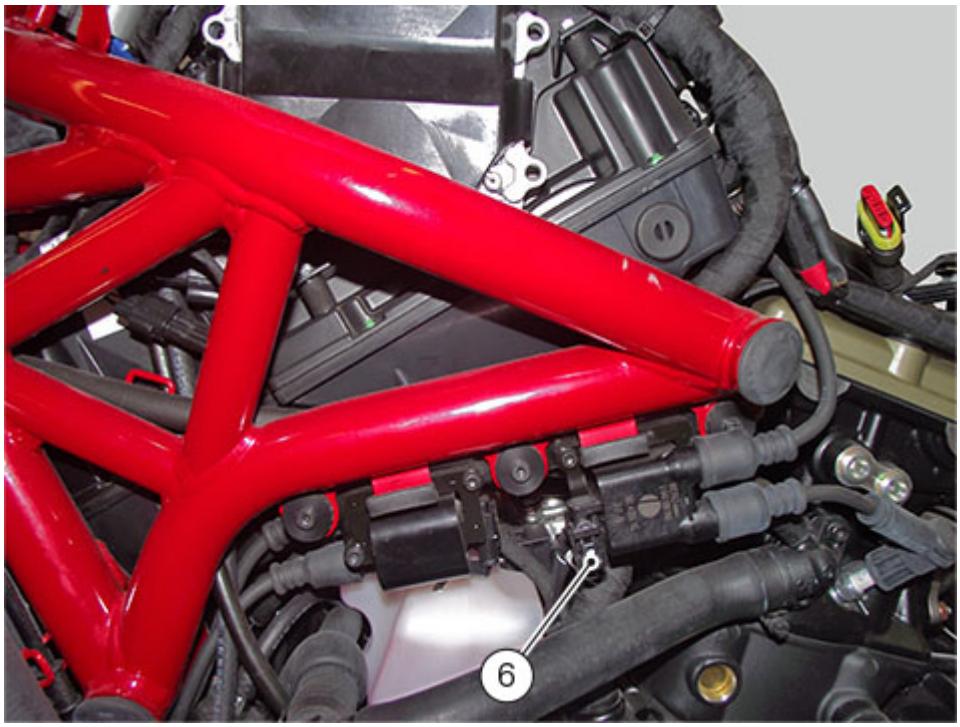

Loosen the two screws (7).
Remove horizontal cylinder coil (1).

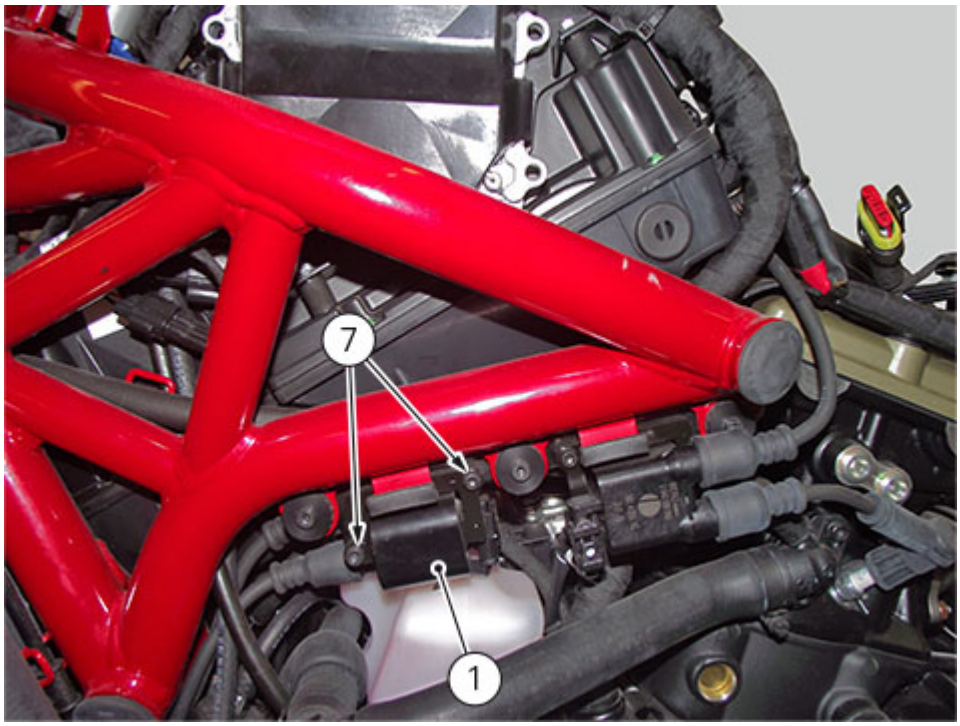

Remove the two screws (8).
Remove vertical cylinder coil (2).

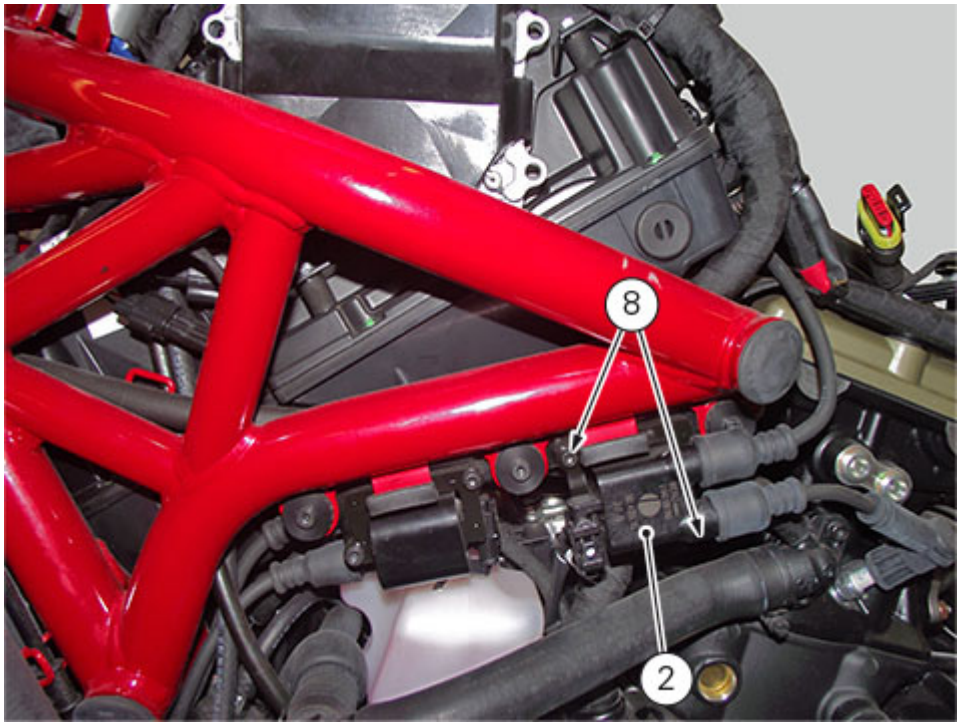

ELECTRIC CHECKS

PIN OUT	**Function**
PIN 1	Control signal to negative
PIN 2	Positive to battery

DIAGNOSIS CHECKS

Check control unit correct operation with the DDS 2 diagnosis instrument connected to control unit diagnostic socket (A), which is positioned inside electrical components compartment; to reach it, remove the seat.

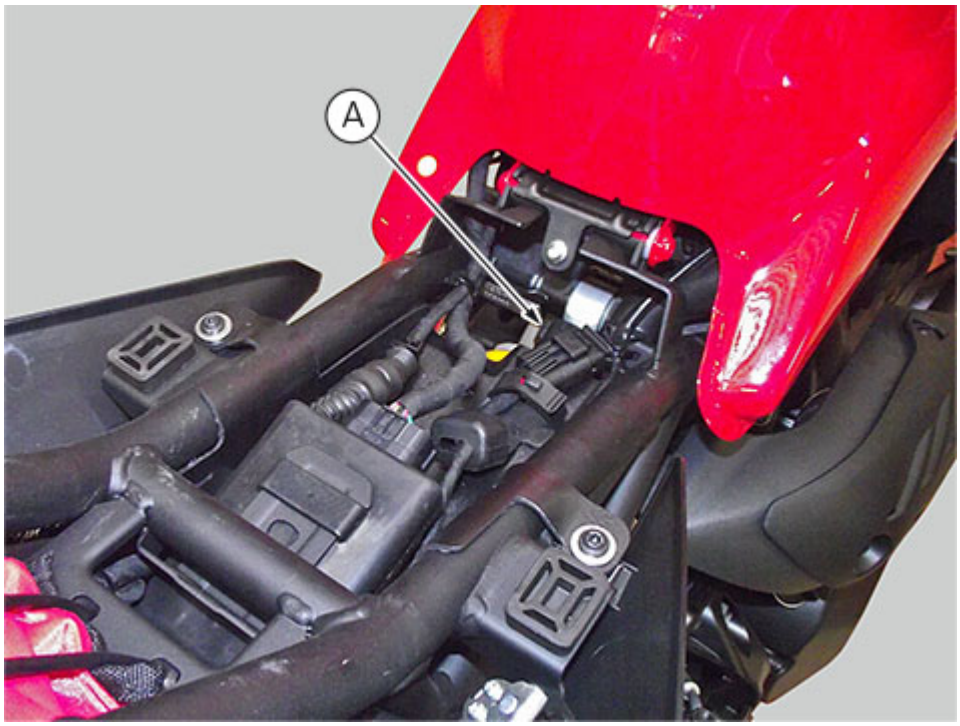

ELECTRIC DIAGRAM

Vertical cylinder coils

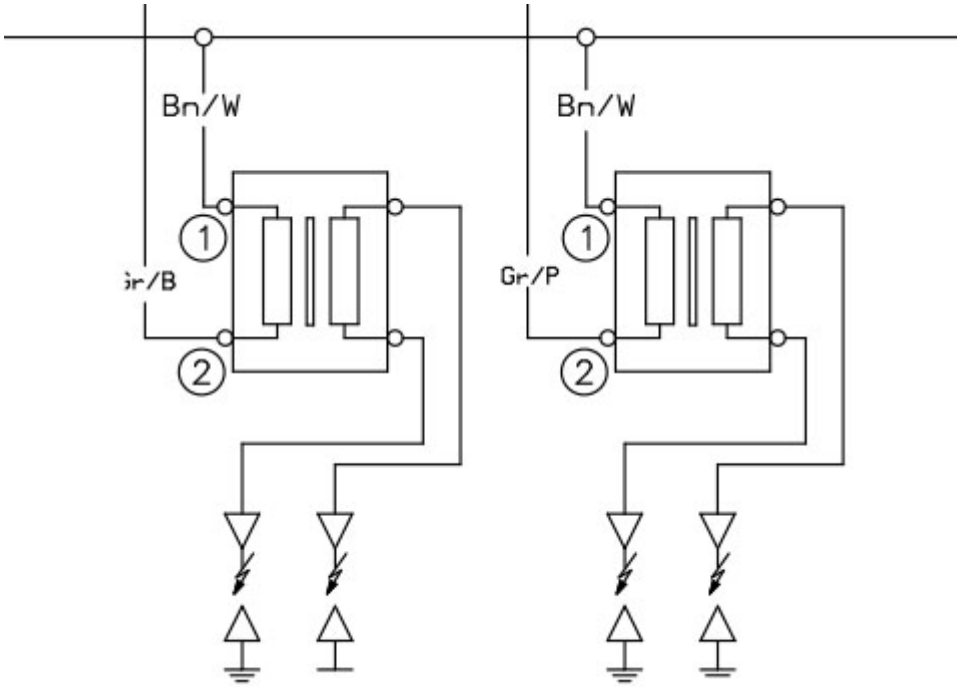

VIN code

The VIN code is an alphanumerical code with 17 characters that clearly identifies a vehicle (family, model, country, serial number, …). This code can be stored in the instrument panel and read through the DDS2 with suitable KWP2000 inputs.
When replacing a control unit, this information must always be copied onto the new control unit, using DDS2.

Anti-lock Braking System (ABS)

ABS control unit (1).
The necessary signals for correct operation are:

- Front wheel speed;
- Rear wheel speed.

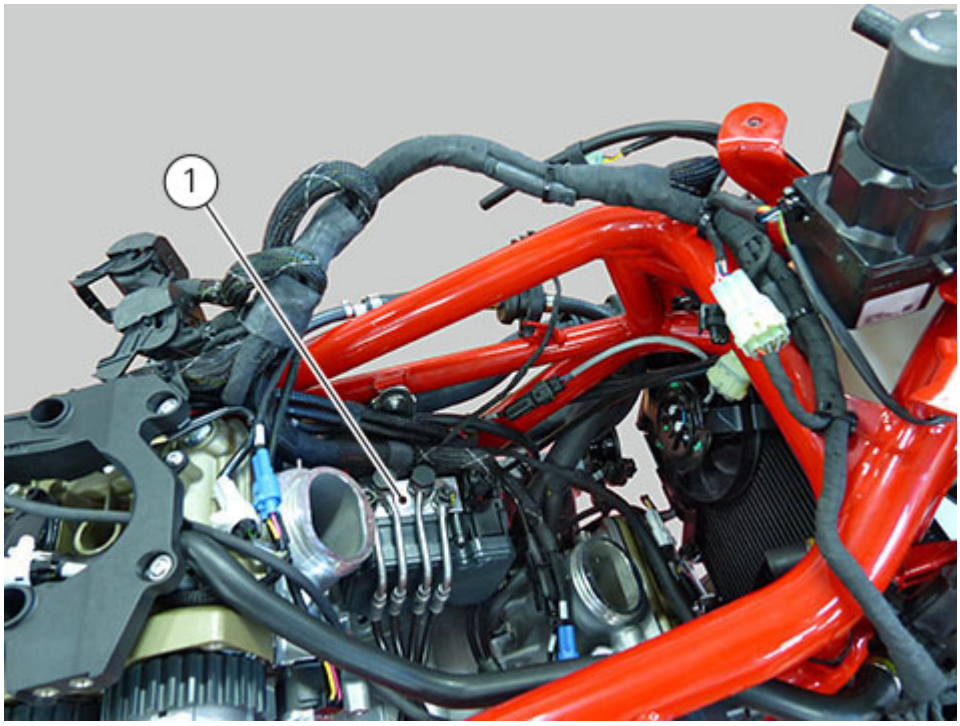

For removal and refitting please refer to chapters "Removing the ABS control unit" and "Refitting the ABS control unit".

CHECKS

Check control unit correct operation with the DDS 2 diagnosis instrument connected to control unit diagnostic socket (A), which is positioned inside electrical components compartment; to reach it, remove the seat.

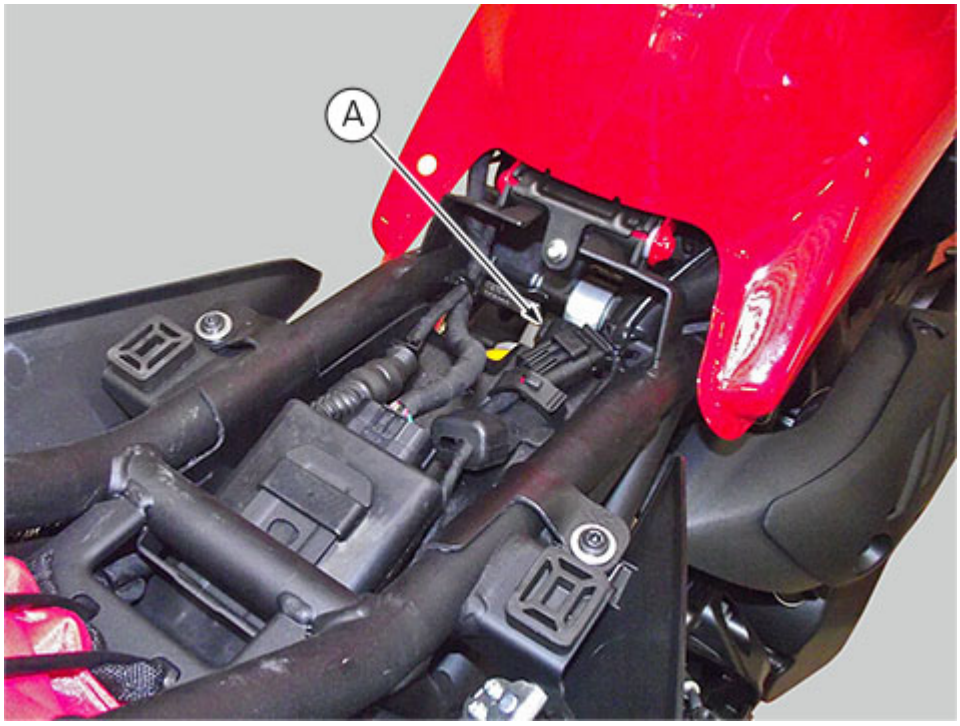

ELECTRIC DIAGRAM

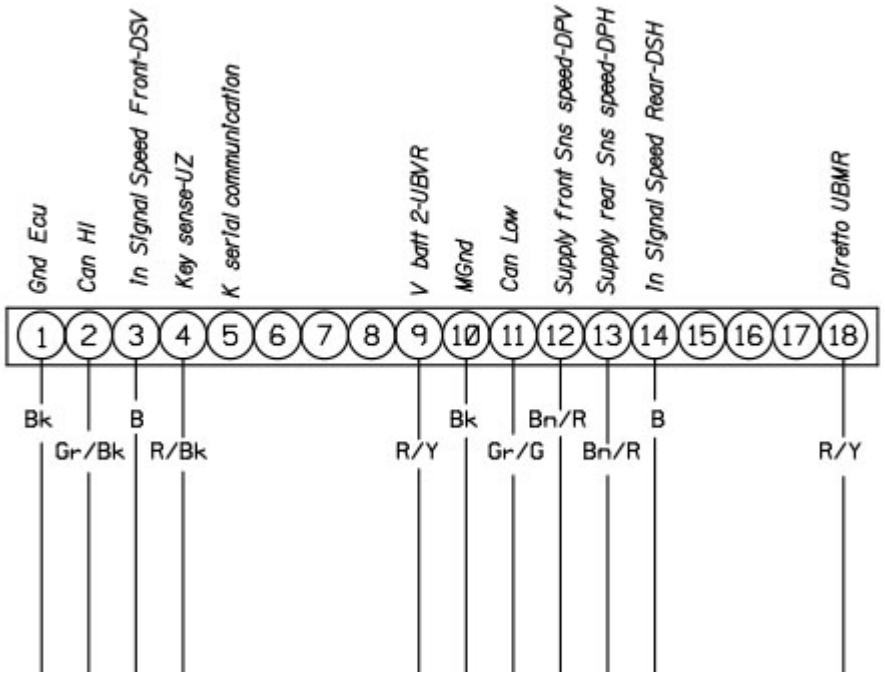
Gnd Ecu
Can HI
In Signal Speed Front-DSV
Key sense-UZ
K serial communication
V batt 2-UBVR
MGnd
Can Low
Supply front Sns speed-DPV
Supply rear Sns speed-DPH
In Signal Speed Rear-DSH
Diretto UBMR
1
2
3
4
5
6
7
8
9
10
11
12
13
14
15
16
17
18
Bk
Gr/Bk
B
R/Bk
R/Y
Bk
Gr/G
Bn/R
Bn/R
B
R/Y

Accelerator Position System (APS)

The Acceleration Position Sensor (APS) (1) or throttle twistgrip sensor, is a potentiometer that generates an electric input sent to the control unit which receives information on:

- throttle twistgrip position;
- activation dynamics



To remove the APS, follow the instructions in chapter "Removing the throttle control".

CHECKS

Check control unit correct operation with the DDS2 diagnosis instrument connected to control unit diagnostic socket (A), which is positioned inside electrical components compartment; to reach it, remove the seat.

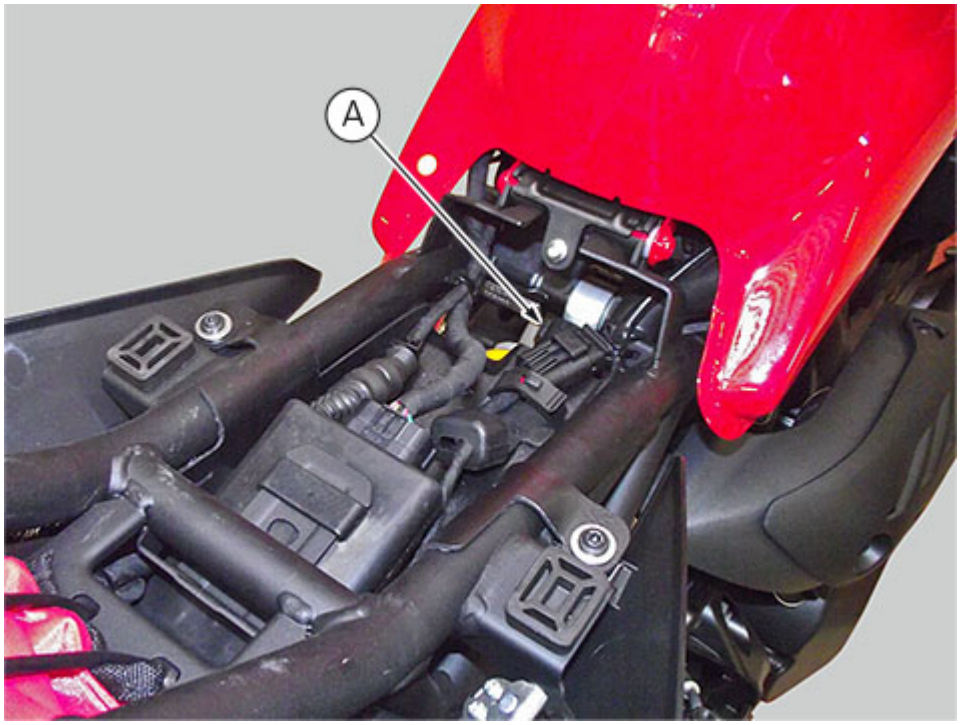

ELECTRIC DIAGRAM

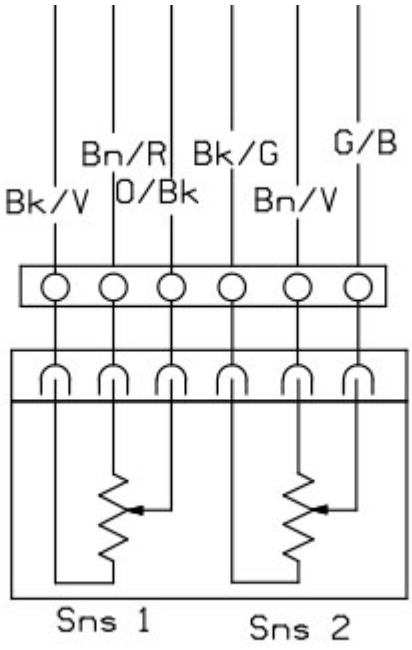
Bn/R
Bk/G
G/B
Bk/V
O/Bk
Bn/V
Sns 1
Sns 2

CAN line

This model utilises a CAN line (Controller Area Network) which has made it possible to greatly simplify the layout of the electrical system and consequently reduce its overall weight.
The CAN line is connected to two nodes: the instrument panel and the engine control unit. Thanks to this communication line no sensor doubles are required as sensor signals are shared by both electronic units. Sensors are connected to closer electronic unit (instrument panel or engine control unit), which sends the signals to the network to be processed by the control units.
CAN line consists of two wires for digital signal transfer; they both carry precise and perfectly decipherable data.
The instrument panel and the engine control unit, which are connected to the CAN line, are fitted with special hardware which acknowledges whether a pulse sequence includes pertaining data to be processed by the computing unit.

Ducati Traction Control (DTC)

The traction control is managed by the BBS.
Thanks to the front speed sensor (1) and to the rear speed sensor (2), the control unit can control vehicle traction according to the speed difference between the two wheels.





CHECKS

Check control unit correct operation with the DDS2 diagnosis instrument connected to control unit diagnostic socket (A), which is positioned inside electrical components compartment; to reach it, remove the seat.

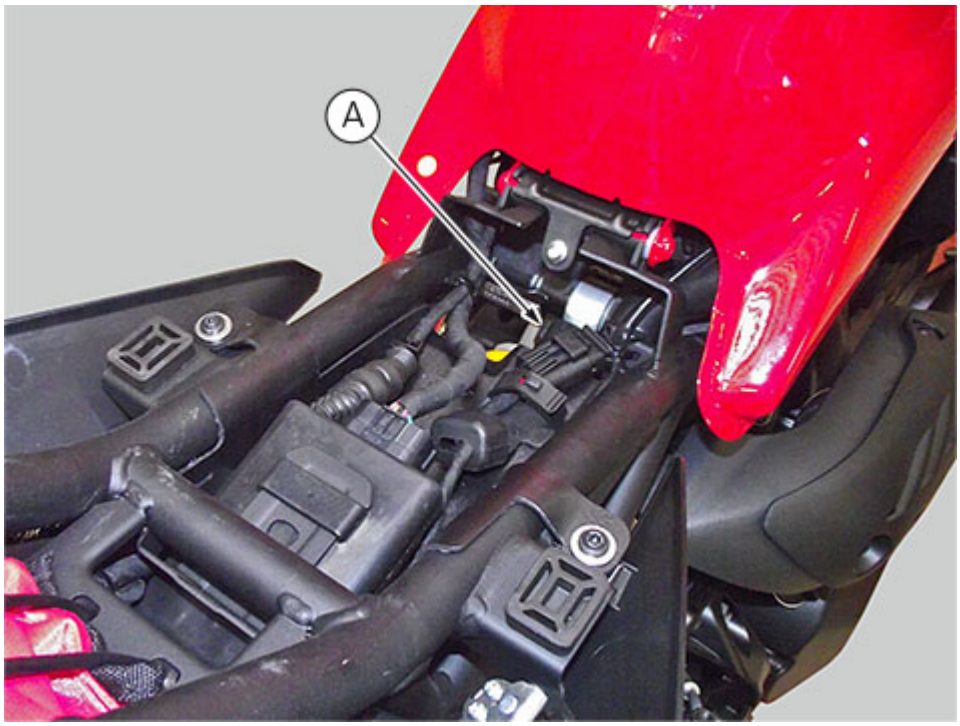

To remove and refit the speed sensors, refer to chapters "Replacing the front phonic wheel sensor" and "Replacing the rear phonic wheel sensor"

ELECTRIC DIAGRAM

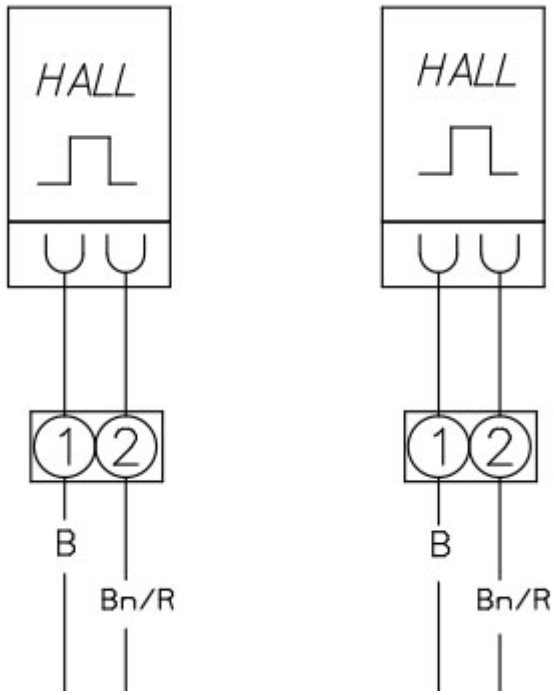

Electronic Throttle Valve (ETV)

The ETV (1) is the motor that controls the throttle valve opening and closure and is located on the throttle body. In case of failure it is not possible to replace only the ETV, but it is necessary to replace the complete throttle body.
Once replaced, reset the TPS, using the DDS2.

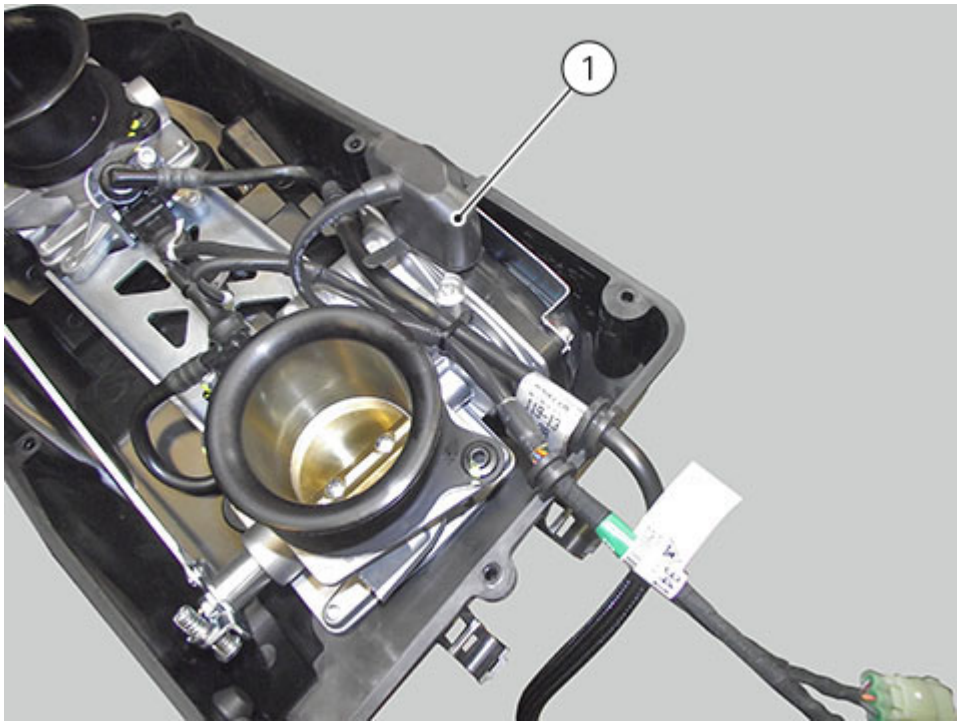

CHECKS

Check control unit correct operation with the DDS2 diagnosis instrument connected to control unit diagnostic socket (A), which is positioned inside electrical components compartment; to reach it, remove the seat.

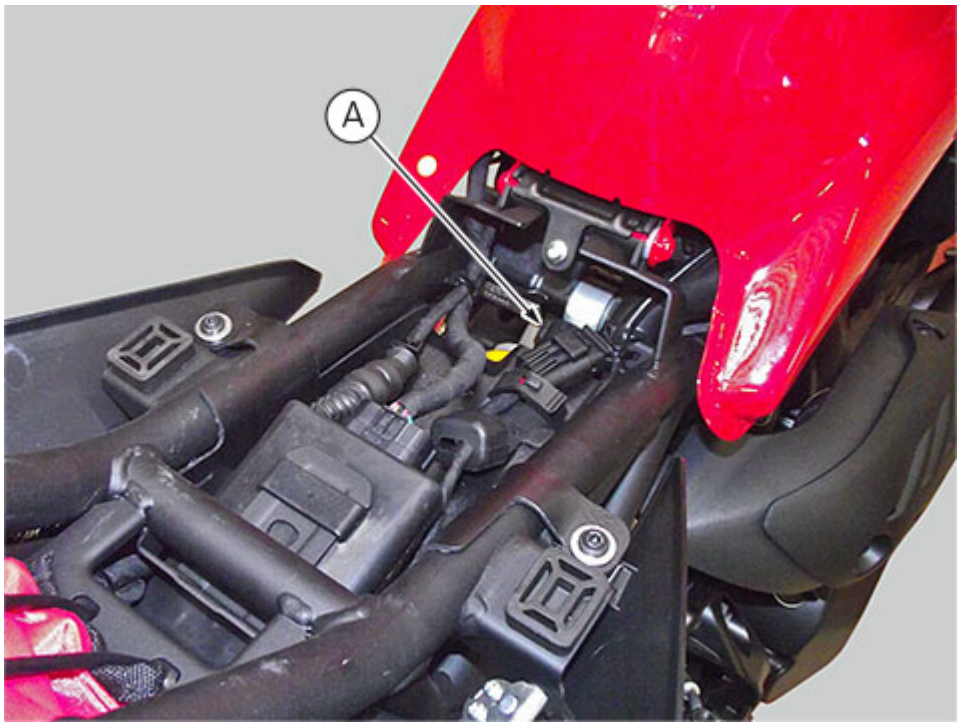

ETV ELECTRIC DIAGRAM

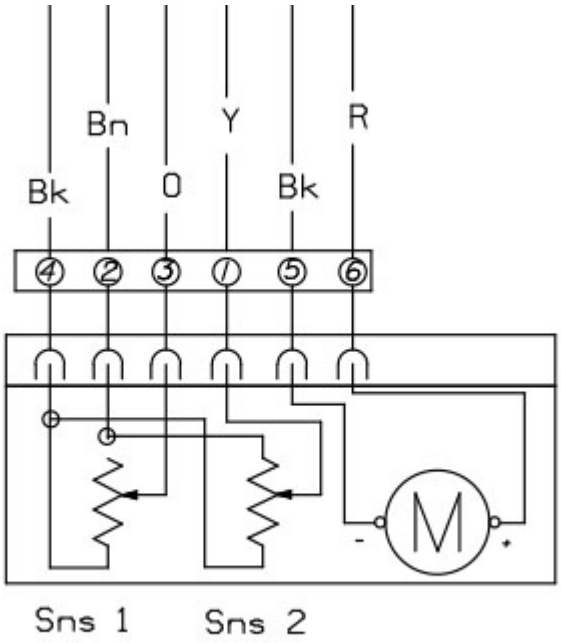

To remove and refit the ETV, refer to chapters "Removing the airbox and throttle body" and "Refitting the airbox and throttle body".

Black Box System (BBS)

BBS (1) is an electronic control unit connected to the CAN line.

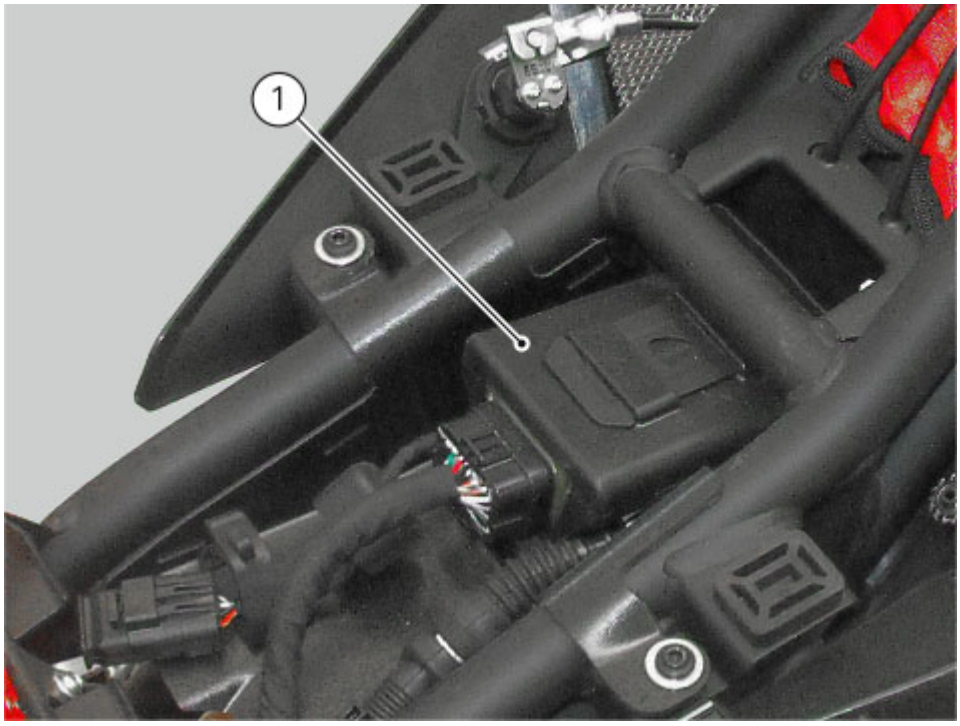

ELECTRIC DIAGRAM



REMOVAL PROCEDURE

To remove BBS (1), remove the seat "Removing the seat" and, after having disconnected connector (2), slide BBS (1) out of bracket (3) from subframe.

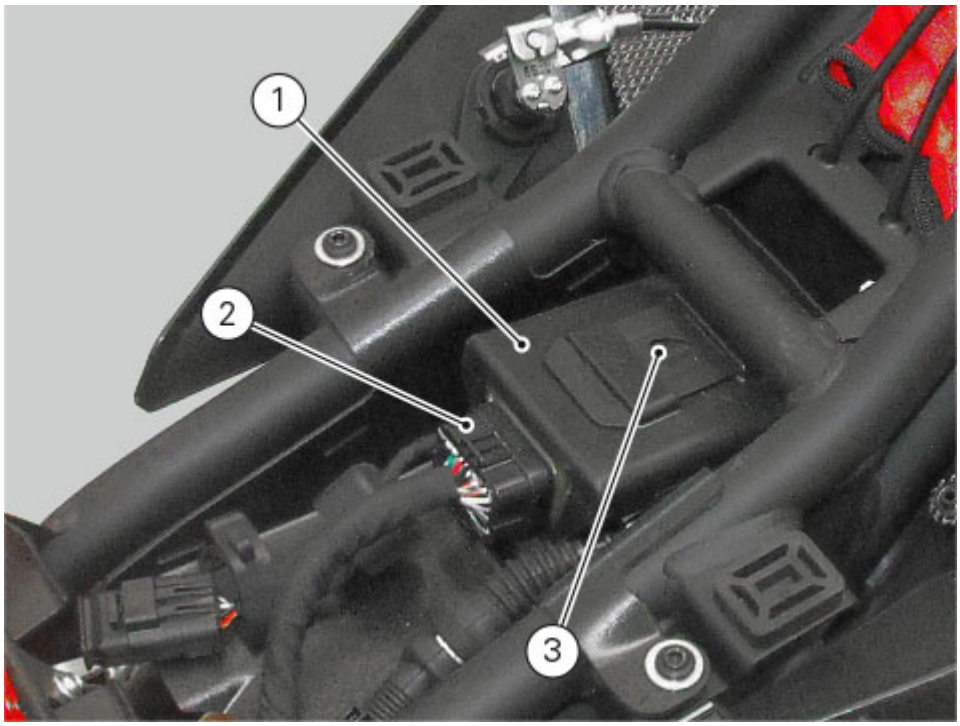

REFITTING PROCEDURE

Refitting is the reverse of removal.

CHECKS

Check control unit correct operation with the DDS 2 diagnosis instrument connected to control unit diagnostic socket (A), which is positioned inside electrical components compartment; to reach it, remove the seat.

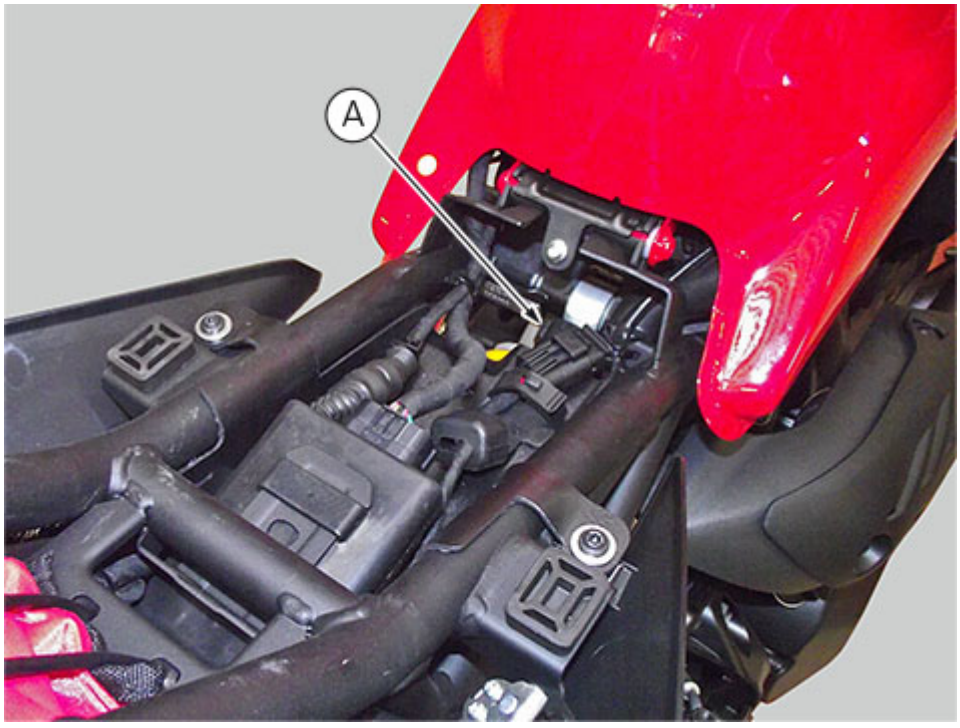

Map sensor

The Map sensor (Manifold Absolute Pressure) measures the air pressure to calculate the exact quantity of fuel to be injected.
The control unit processes the intake air pressure value and the external temperature value to calculate the quantity of intake air in the cylinders and, based on the preset stoichiometric ratio, determines the correct quantity of fuel to be delivered to the injectors.
The air/fuel ratio is therefore always excellent.

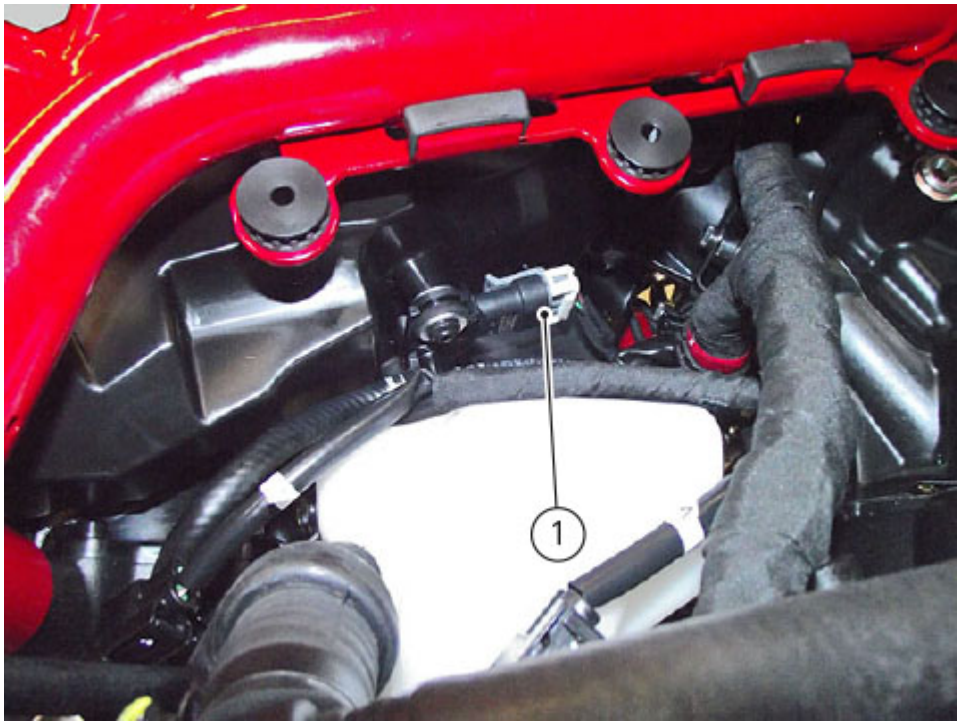

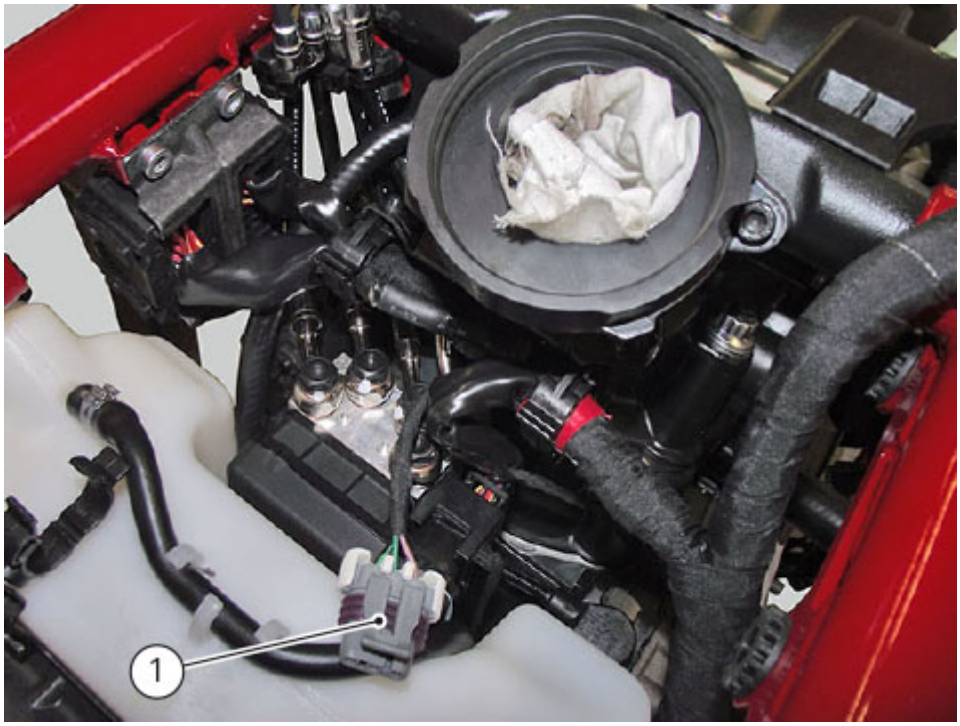

CHECKS

Check control unit correct operation with the DDS 2 diagnosis instrument connected to control unit diagnostic socket (A), which is positioned inside electrical components compartment; to reach it, remove the seat.

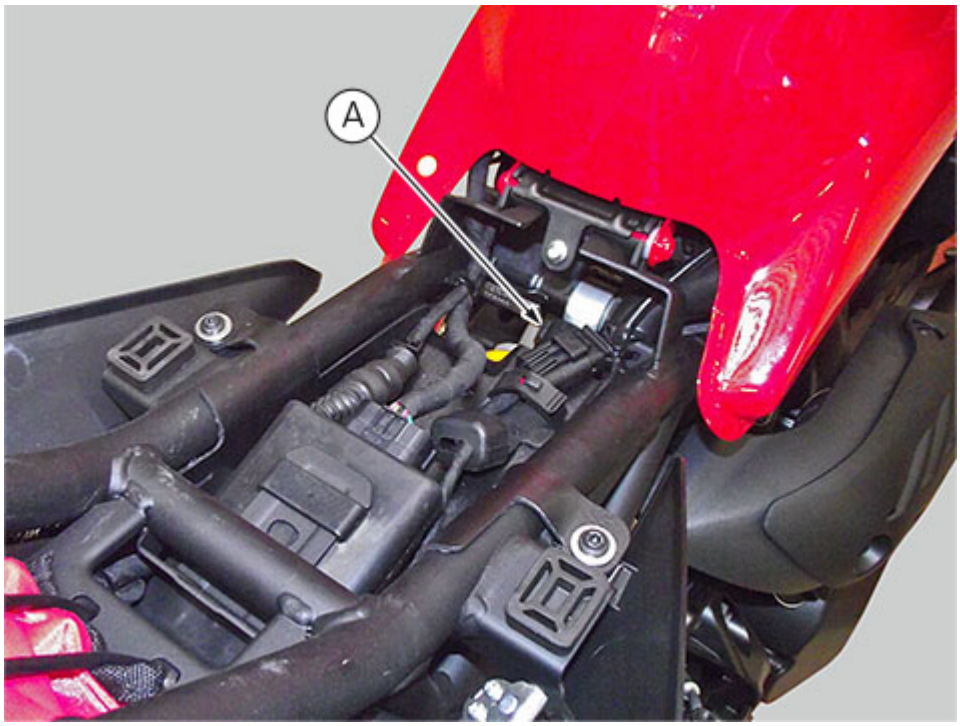

ELECTRIC DIAGRAM

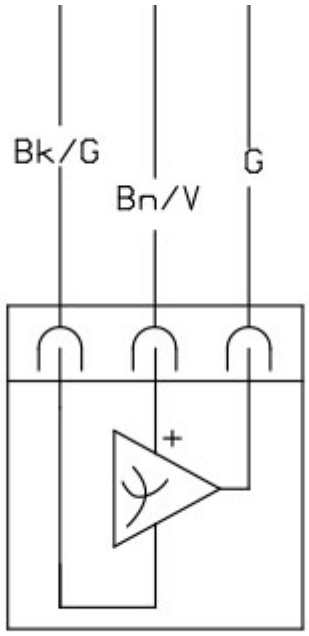

REMOVAL/REASSEMBLY

To remove and refit the MAP sensor, refer to chapters "Removing the airbox and throttle body" and "Refitting the airbox and throttle body".

Rpm sensor (pick-up)

The engine rpm sensor (1) is an inductive sensor that detects the teeth of a phonic wheel by means of an alternate signal proportional to the teeth passage speed.

The toothed pulley usually features "Xn teeth with a gap of two teeth" as reference for the first cylinder TDC.

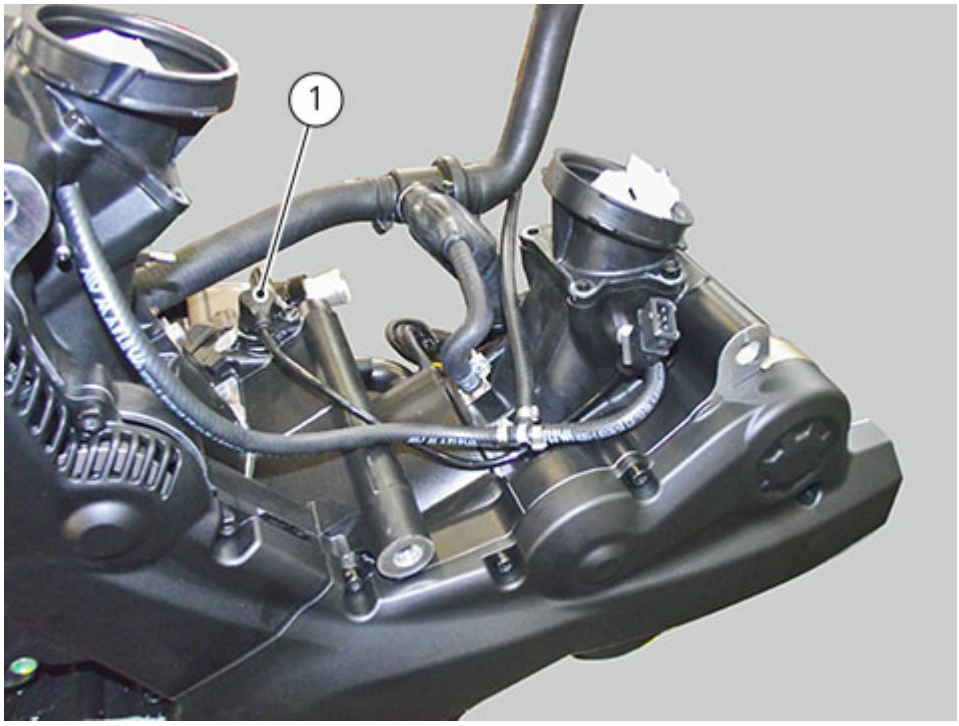

Position 1: the pick-up sensor detects the "full area" (i.e. the tooth);
Position 2: the pick-up sensor detects the "empty area" (i.e. the gap between the teeth).

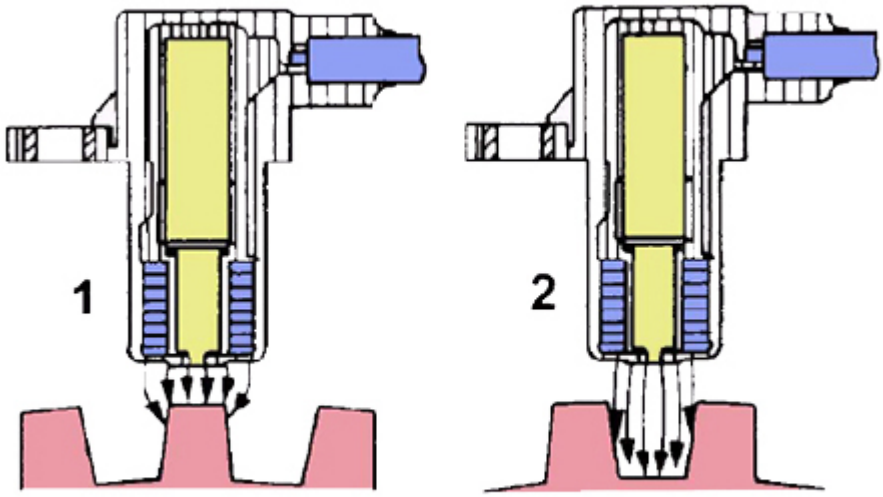

Note
Without rpm signal the engine does not start.

CHECKS

Rpm (pick-up) sensor is positioned under coolant expansion reservoir, on engine LH side.
For removal, proceed as described in chapter "Removing the generator cover".

Check control unit correct operation with the DDS2 diagnosis instrument connected to control unit diagnostic socket (A), which is positioned inside electrical components compartment; to reach it, remove the seat.

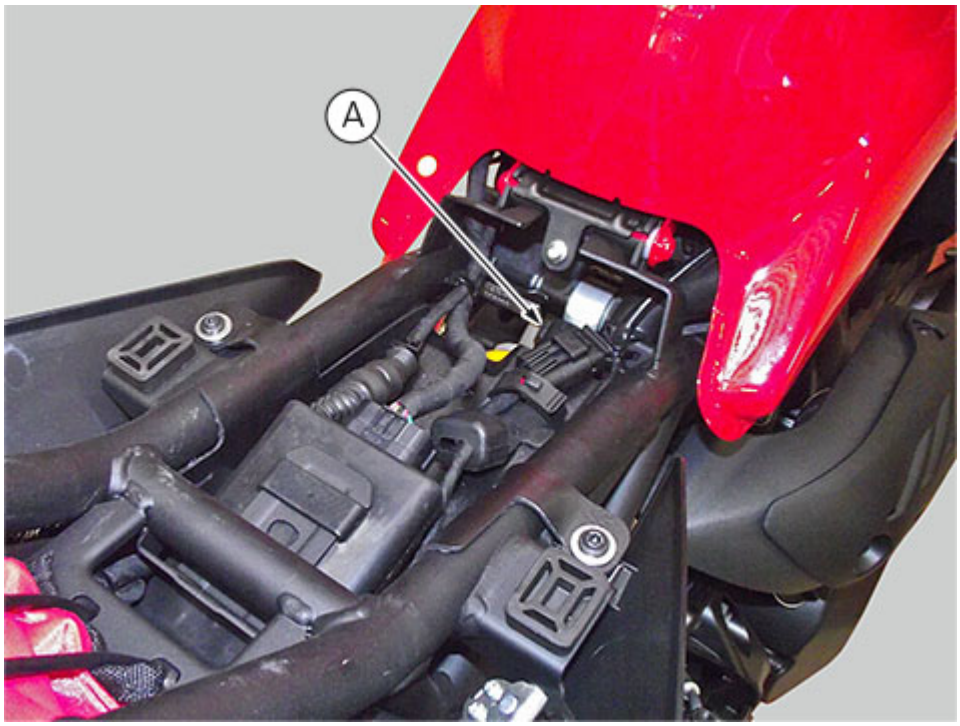

ELECTRIC DIAGRAM

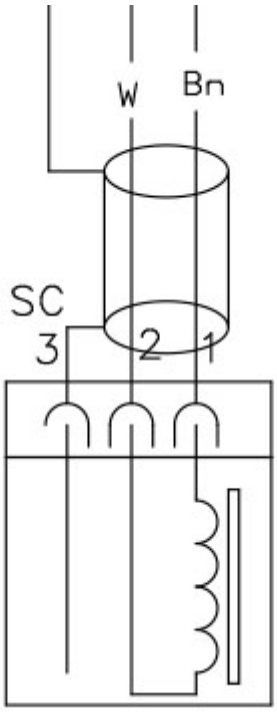

Throttle position potentiometer (TPS)

In this vehicle, the TPS is integrated in the ETV.

Oxygen sensor

The oxygen sensor detects the presence of unburned fuel in the exhaust gases, processes the information sent to the control unit and allows keeping the mixture ratio (air kg/fuel kg) within the best efficiency range for the catalytic converter.

The vehicle is provided with two lambda sensors, one per cylinder:

- oxygen sensor (1) for horizontal cylinder exhaust;
- oxygen sensor (2) for vertical cylinder exhaust.

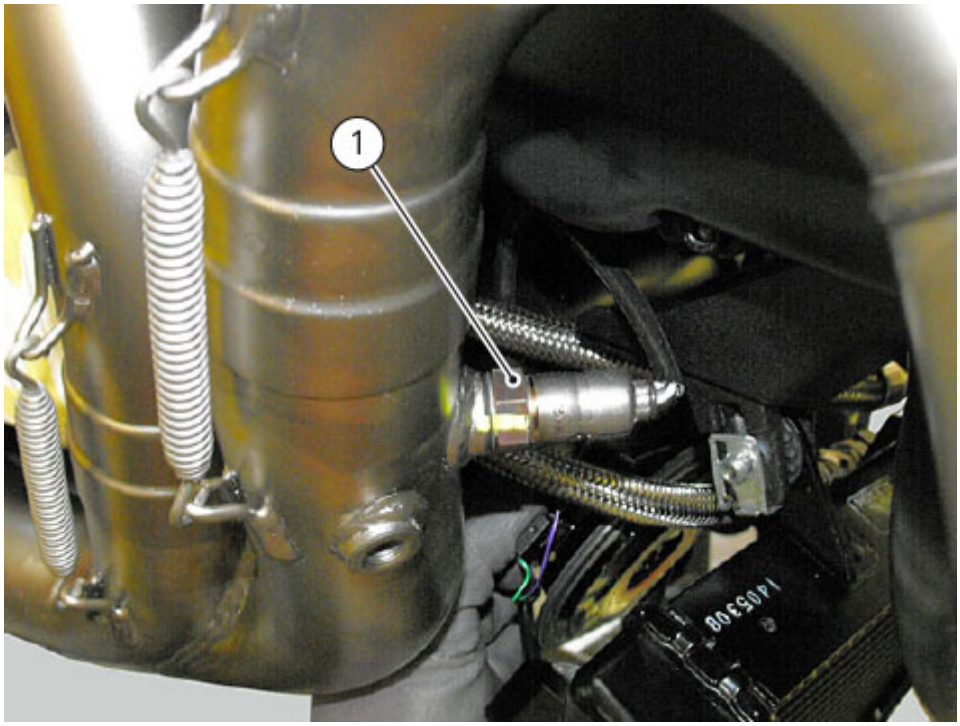

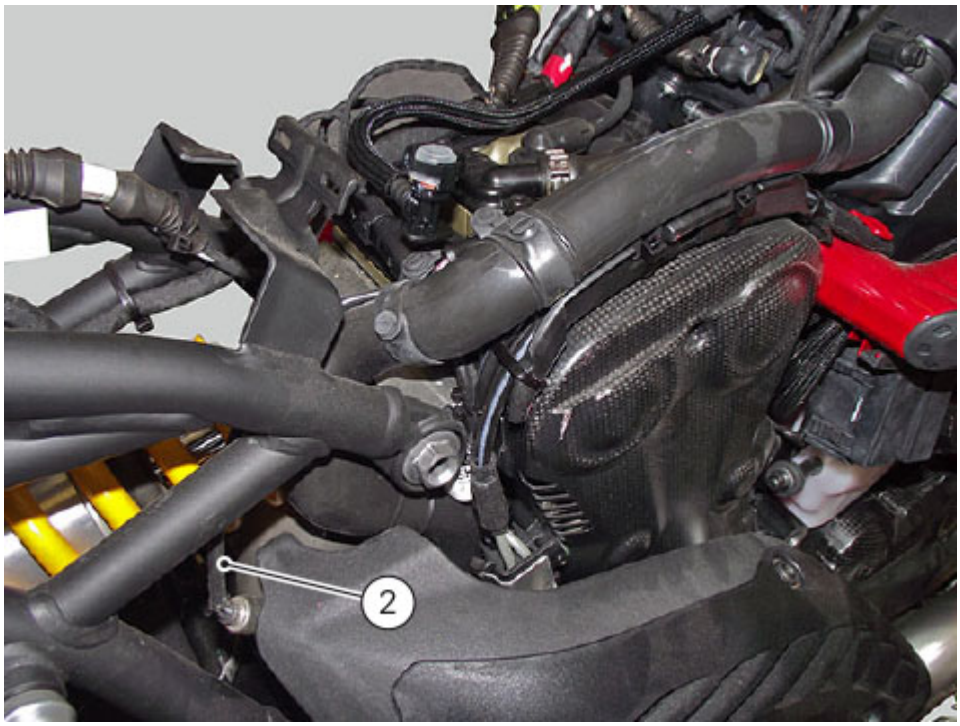

If necessary, reach the oxygen sensor connectors as described in chapter "Routing of wiring on frame".

CHECKS

Check control unit correct operation with the DDS 2 diagnosis instrument connected to control unit diagnostic socket (A), which is positioned inside electrical components compartment; to reach it, remove the seat (Removing the seat).

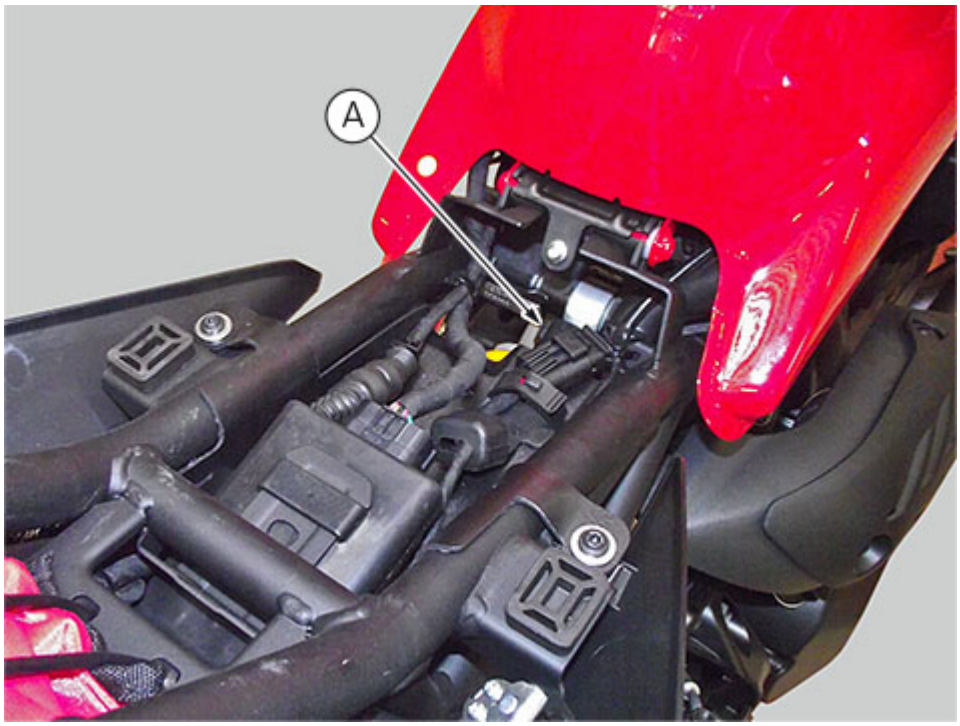

ELECTRIC DIAGRAM

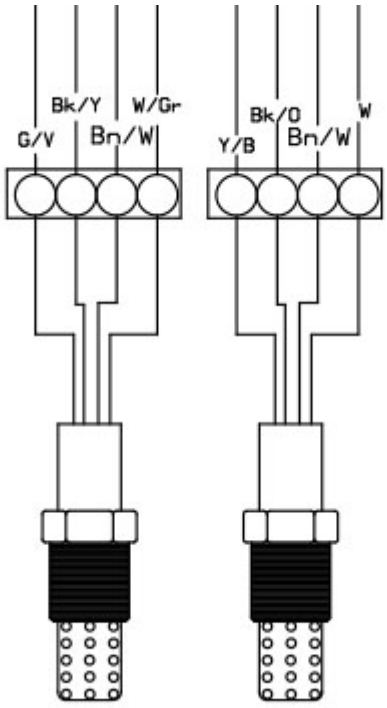

Engine control unit (ECU)

The engine control unit (1) is an electronic digital microprocessor-based unit.

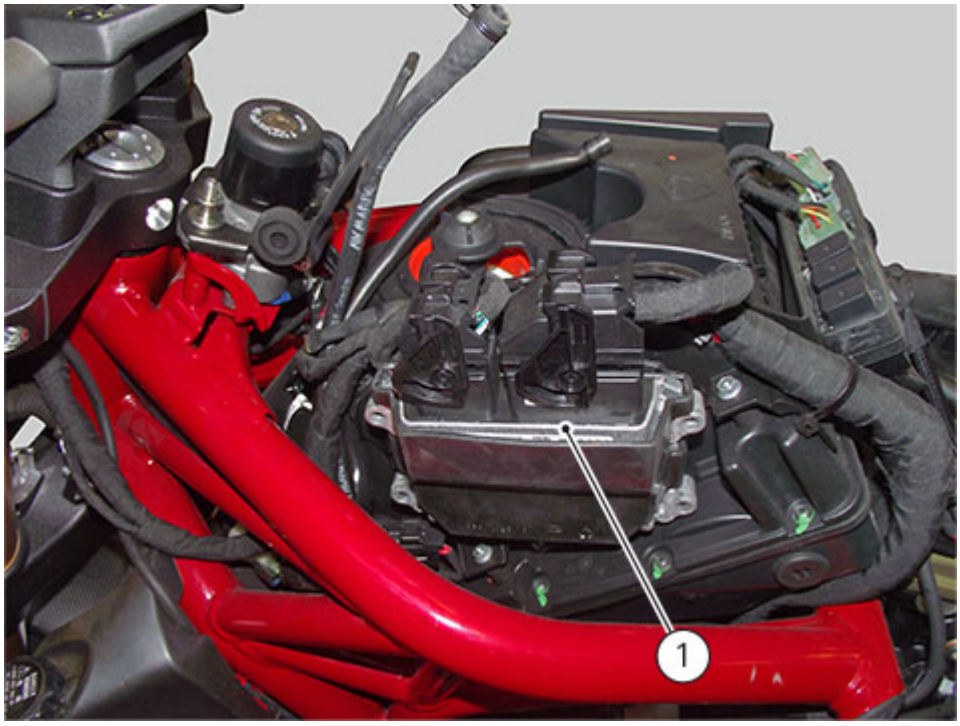

Important

The maps, which include spark advance values, injection times, crankshaft angle for injector closing and all correction curves as a function of temperature and atmospheric pressure values, are stored in the Flash Eprom of the ECU. The above values are preset by the Manufacturer after testing the motorcycle under different riding conditions. These settings cannot be changed.

ELECTRIC DIAGRAM

ECU 1 connector

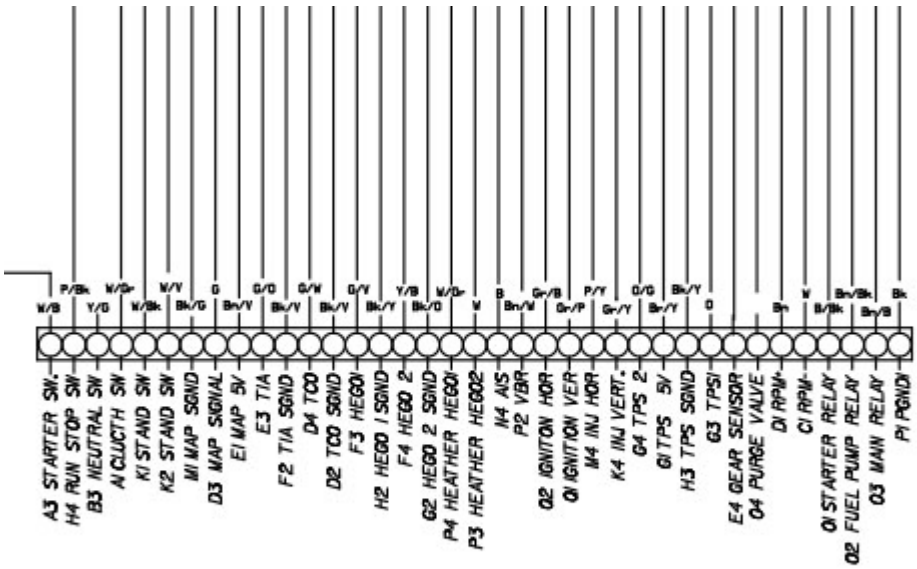

ECU 2 connector

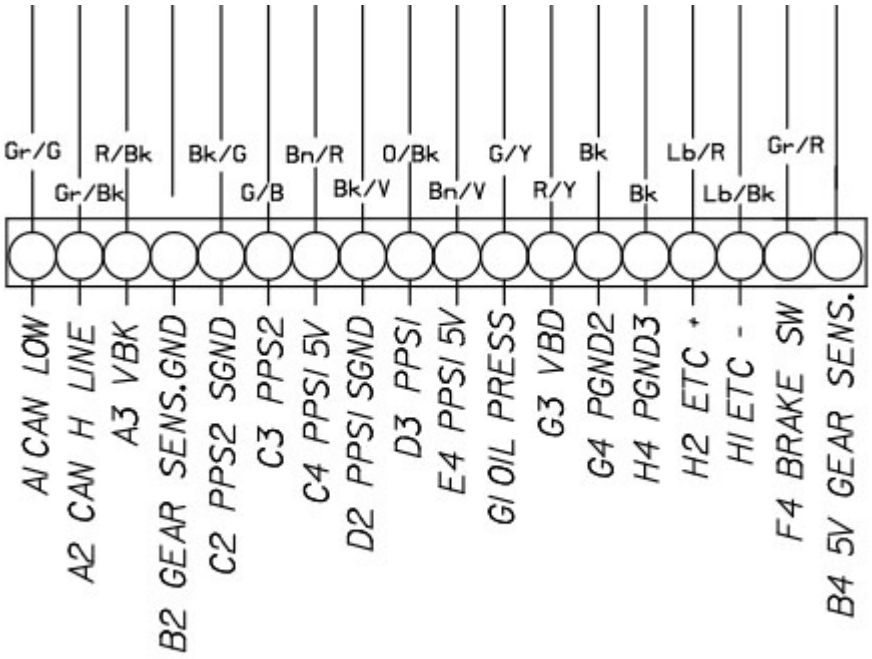

To remove and refit the ECU, see the procedure described in chapter "Removing the airbox and the throttle body"

Special functions

The functions displayed in the **standard screen** of the selected display layout (CORE, FULL or TRACK) are the following:

Main information

- Engine rpm indication (RPM)
- Motorcycle speed
- Gear indication
- Riding Mode
- DTC
- ABS
- the menus display the following functions:
  - Odometer (TOT)
  - Trip meter 1 (TRIP1)
  - Trip meter 2 (TRIP2)
  - Partial fuel reserve counter (TRIP FUEL)
  - LAP time
  - Engine coolant temperature
  - Instantaneous fuel consumption (CONS.)
  - Average Fuel Consumption (CONS. AVG)
  - Average speed (SPEED AVG)
  - Trip time (TRIP TIME)
  - Ambient air temperature
  - Clock

Additional information

- DDA
- LAP
- Service indication (SERVICE)
- Warnings/Alarms
- "ERROR" indication

The functions within the **Setting Menu** that can be modified by the user are the following:

- Riding mode customisation (RIDING MODE): this menu allows customisation of:
  - ABS setting (ABS)
  - DTC level setting (DTC)
  - Engine setting (ENGINE)
  - Reset to default settings (DEFAULT)
- Battery voltage (BATTERY)
- Display backlighting (BACK LIGHT)
- CLOCK SETTING
- PIN CODE (enter/change)
- Engine rpm digital indication (RPM)
- Unit setting (Speed - Temperature - Fuel consumption) UNIT
- Display mode setting
- LAP (view/delete/reset automatic settings)
- DDA (ON/OFF - view - delete)

Note
All instrument panel functions can be displayed and downloaded in the .pdf file from the download area.

Restoring motorcycle operation via the PIN CODE

In case of key acknowledgement system or key malfunction, the instrument panel allows the user to enter his/her own PIN code to temporarily restore motorcycle operation.
If the PIN CODE function is not active, the instrument panel does not activate the page for entering the release code, but shows the Standard screen instead, triggers the E-LOCK error to inform the user that there is a problem with key reading/acknowledgement and disables the opportunity to enter the Setting Menu.
The E-LOCK error warning must remain active until next Key-OFF.
If the PIN CODE function is active, the instrument panel activates the page for entering the release code and displays the message INSERT PIN CODE with a string of four green dashes " - - - - " under it.

Entering the code:

1 Press button (4), only one digit indicating "0" turns green;
2 each time you press the button (2) the displayed number increases by one (+ 1) up to "9" and then starts back from "0";
3 each time you press the button A (1) the displayed number decreases by one (- 1) up to "1" and then starts back from "0";
4 to confirm the number, press the button (4).

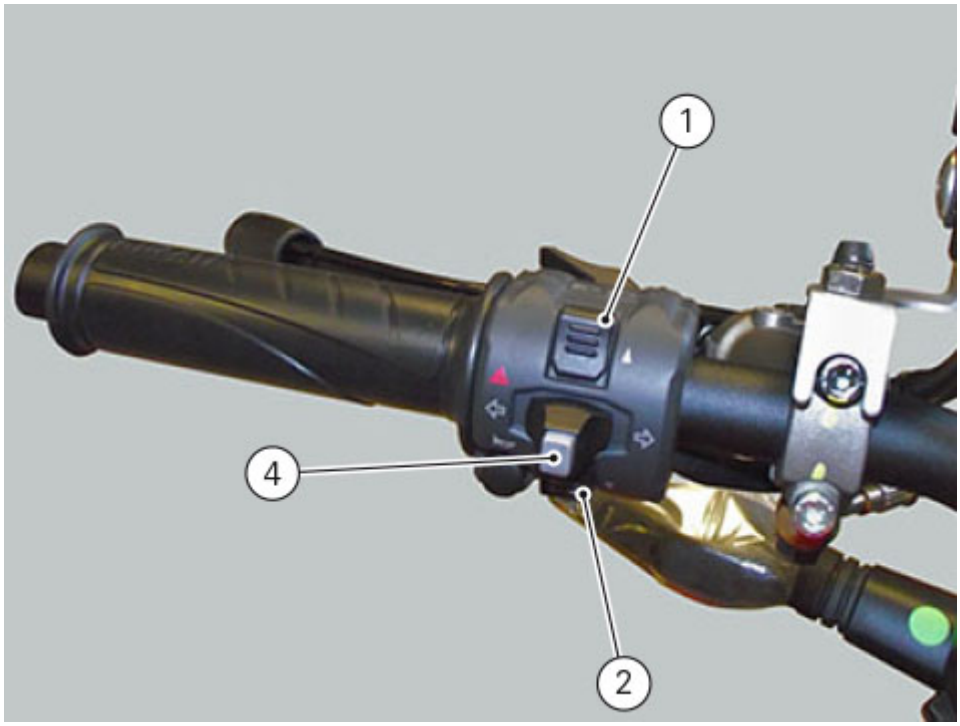

Repeat the procedures until you confirm all the 4 digits of the PIN CODE.

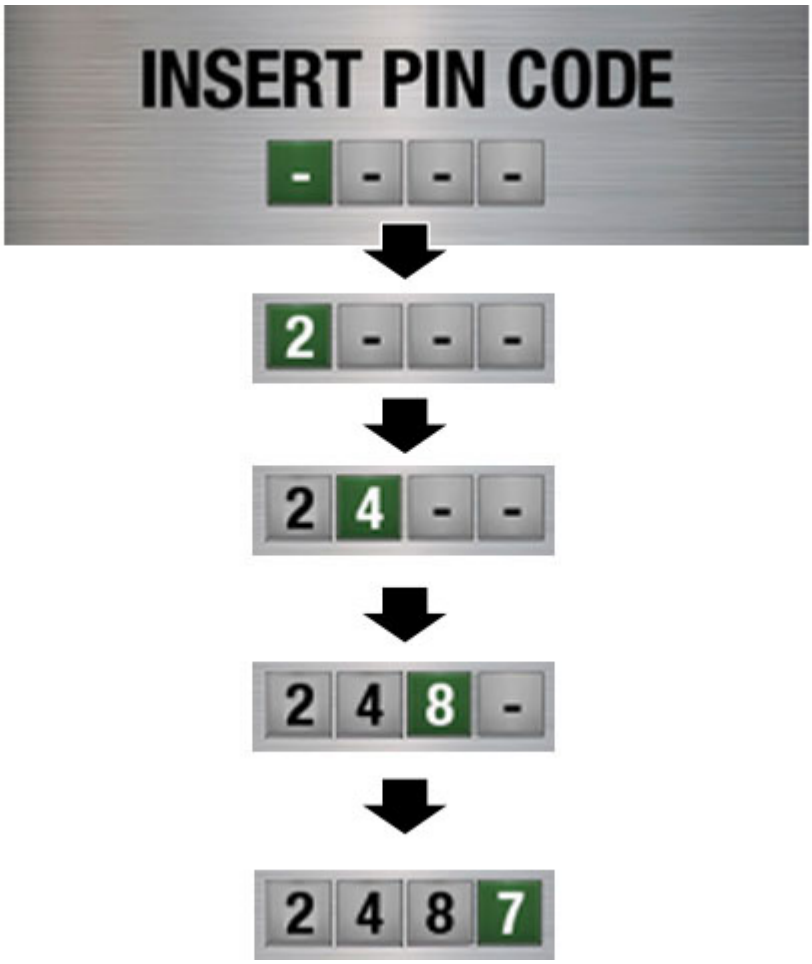

When you press button (4) to confirm the fourth and last digit:

- if the PIN code is not correct, the instrument panel displays WRONG for 3 seconds and then highlights the string of four dashes "- - - -" to allow you to try again. The number of possible attempts is determined by a preset time-out of 2 minutes. After this time, the instrument panel shows the Standard screen, triggers the E-LOCK error and disables the opportunity to enter the Setting Menu.
- If there is a problem during the PIN CODE check, the instrument panel displays ERROR for 3 seconds and then responds in the same way as for the WRONG error.
- If the PIN code is correct, the instrument panel displays CORRECT for 3 seconds and then shows the "Standard screen" and triggers the E-LOCK error to still show the user that there is a problem with key reading/acknowledgement.

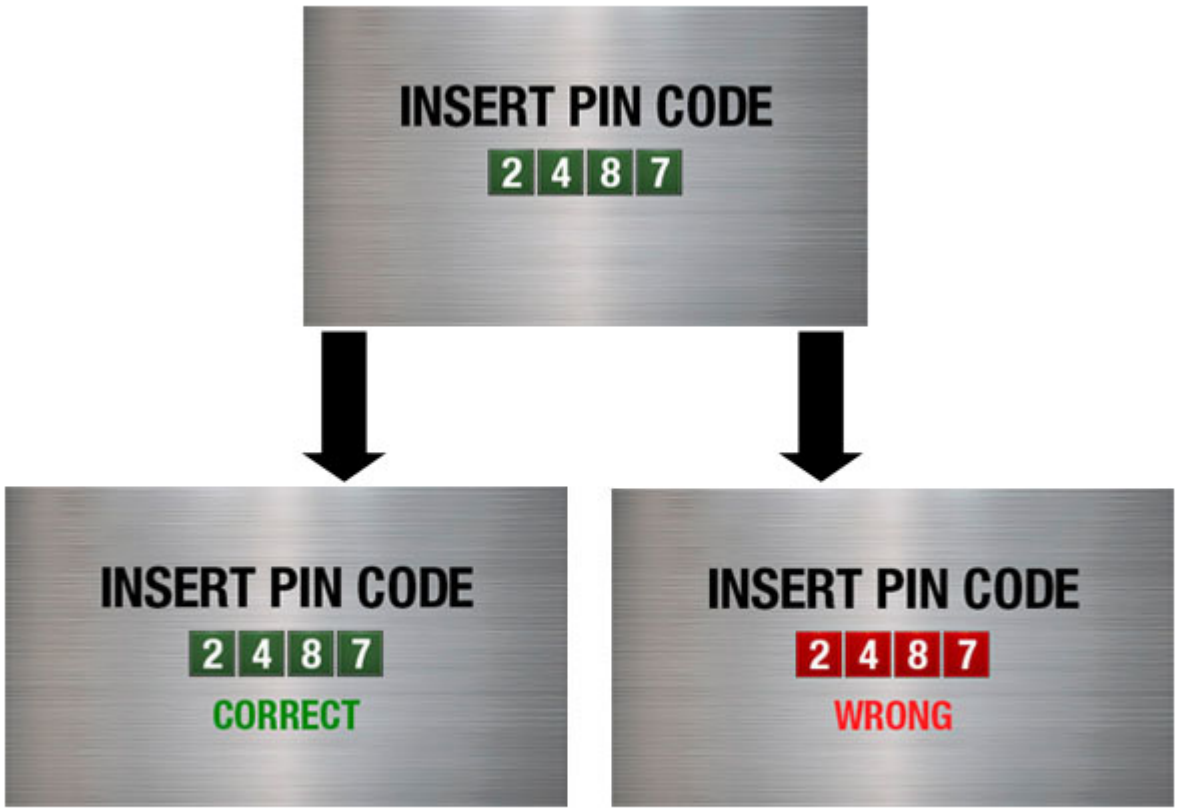

Note

All instrument panel functions can be displayed and downloaded in the .pdf file from the download area.

Displayed errors description

Displayed error	Description
CAN LINE	CAN line BUS OFF
UNKNOWN DEVICE	Control unit not acknowledged by the system - wrong SW
ABS	ABS control unit faulty communication / operation
BBS	BBS control unit faulty communication / operation
	BBS control unit general malfunction
DSB	DSB control unit faulty communication / operation
IMMOBILIZER	E-LOCK control unit general malfunction
	(Immobilizer) key-antenna malfunction
ENGINE	ECU control unit faulty communication / operation
	ECU control unit general malfunction
	Throttle position sensor malfunction
	Throttle grip position sensor malfunction
	Throttle motor or relay malfunction
	Pressure sensor malfunction
	Engine coolant temperature sensor malfunction
	Intake duct air temperature sensor malfunction
	Injection relay malfunction
	Ignition coil malfunction
	Injector malfunction
	Engine rpm sensor malfunction
	Lambda sensor or Lambda sensor heater malfunction
	Motorcycle starting relay malfunction
	Secondary air sensor malfunction
FUEL SENSOR	Reserve NTC sensor malfunction
SPEED SENSOR	Front and/or rear speed sensor malfunction
BATTERY	Battery voltage too high or too low
STOP LIGHT	Stop light not working
FAN	Electric cooling fan malfunction
SIDE STAND	Side stand sensor malfunction

T-AIR	Ambient air temperature sensor
DDA	DDA control unit does not work properly
SPEED	Front and rear speed sensor malfunction

Note

The message "FAN" can be displayed also in case of BBS control unit malfunction and its faulty communication with fans. Pay attention to engine temperature indication.

Note

All instrument panel functions can be displayed and downloaded in the .pdf file from the download area.

Error warnings

The instrument panel manages error warnings in order to allow the rider to identify any abnormal motorcycle behaviour in real time.
Upon Key-On, in case of errors, the instrument panel displays any errors present and turns on the relevant warning light: EOBD light (A) in case of ECU errors, or the Generic Error light (B) in case of error of any other control unit.
During normal operation of the vehicle, when an error is triggered, the instrument panel automatically displays any errors present and turns on the relevant warning light: EOBD light (A) in case of ECU errors, or the Generic Error light (B) in case of error of any other control unit.
Whenever an error is triggered, it is displayed for 5 seconds in a (well-visible icon) "large" size and then continues being displayed in the small size ("small" icon).

Note
Shown display mode is the TRACK layout, icon indication procedure is the same for the CORE and FULL modes.

If several errors are active, the corresponding icons will be displayed one after the other, each remaining on display for 3 seconds.
When an error is triggered, the instrument panel turns on the relevant warning light: EOBD light (A) in case of ECU errors, or the Generic Error light (B) in case of error of any other control unit.





Note

All instrument panel functions can be displayed and downloaded in the .pdf file from the download area.

Warnings/Alarms (WARNING)

The instrument panel manages a number of warnings / alarms, aimed at giving useful information to the rider during use.
Upon Key-On, if there are any active warnings, the instrument panel displays the present warnings.
During normal use, whenever a warning is triggered, the instrument panel automatically displays the warning.
Whenever a warning is triggered, it is displayed for 5 seconds in a (well-visible icon) "large" size and then continues being displayed in the small size ("small" icon).
If several warnings are active, the corresponding icons will be displayed one after the other, each remaining on display for 3 seconds.
When warnings are activated, no warning light will come on.

High engine coolant temperature (High temperature)

This function warns the rider when engine coolant temperature reaches 121°C (250°F).

Note
In this case, Ducati recommends stopping riding and turning engine immediately off; making sure that fans are working.

Note
Shown display mode is the TRACK layout, icon indication procedure is the same for the CORE and FULL modes.





DDA memory full (DDA full)

This function warns the rider when DDA memory is full and no more trip data can be stored.

Note
Shown display mode is the TRACK layout, icon indication procedure is the same for the CORE and FULL modes.





ICE

This function warns the rider when there might be ice on the road, due to the low external temperature.
This warning turns on when temperature drops to 4°C (39°F) and turns off when temperature raises to 6°C

(43°F).

Warning

This warning does not eliminate the possibility of icy road areas even with temperatures above 4°C (39°F); when ambient temperature is "low", ride responsibly, especially on road areas not exposed to sunlight and/or on bridges.

Note

Shown display mode is the TRACK layout, icon indication procedure is the same for the CORE and FULL modes.





Note

All instrument panel functions can be displayed and downloaded in the .pdf file from the download area.

Parameter setting and displaying

Upon key-on, the instrument panel displays the DUCATI logo and switches on the LED warning lights in two steps ("initial check routine").
After this routine, the instrument panel displays the main page in one of the available layouts (CORE, FULL or TRACK), depending on the one in use before last KEY-OFF.

During this first check stage, if the motorcycle speed exceeds 10 km/h (actual speed), the instrument panel will stop:

- the display check routine and display the standard screen containing updated information;
- the warning light check routine and leave ON only the warning lights that are actually active at the moment.



The main page can have three different layouts: CORE, FULL and TRACK, where data can be scrolled using buttons (A) and (B).

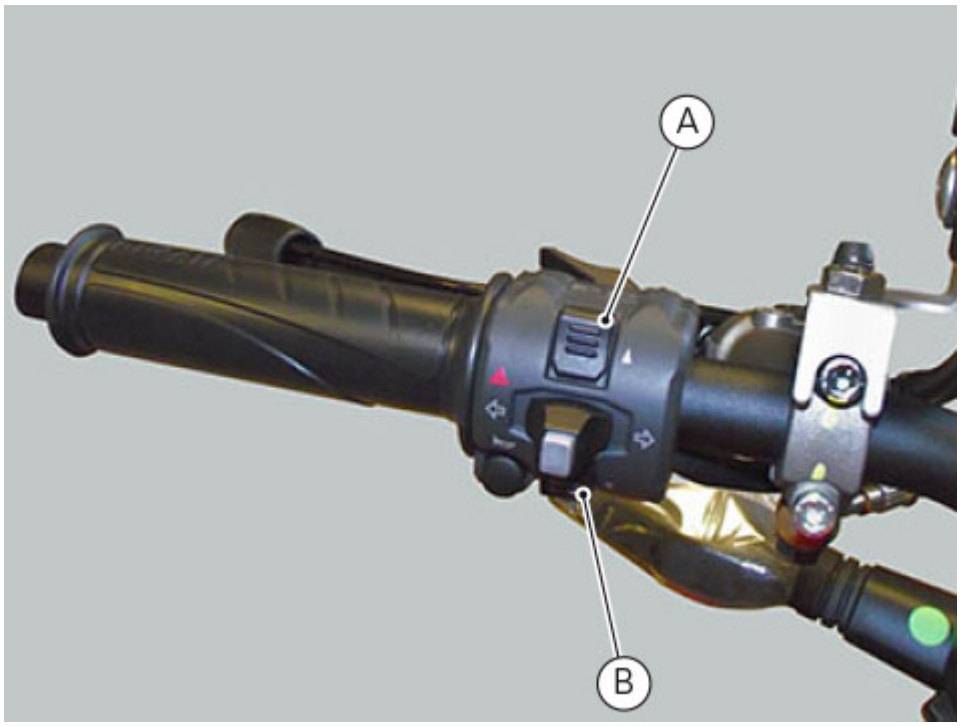

DATA AVAILABLE FOR EACH MODE

CORE

Data displayed on the main screen for CORE layout are as follows:

1 ABS ON/OFF indication.
2 Clock.
3 DTC level indication (ON) or DTC OFF indication.
4 DDA ON indication (only if present).
5 Menu 1 (Odometer, Trip 1, Trip 2, Trip Fuel, Trip Time, Lap time - only if active).
6 Motorcycle speed.
7 Set Riding Mode.
8 Menu 2 (Instantaneous fuel consumption, Average fuel consumption, Average speed, Trip time, Ambient air temperature, Engine temperature).
9 LAP indication (only if active).
10 Gear indication.

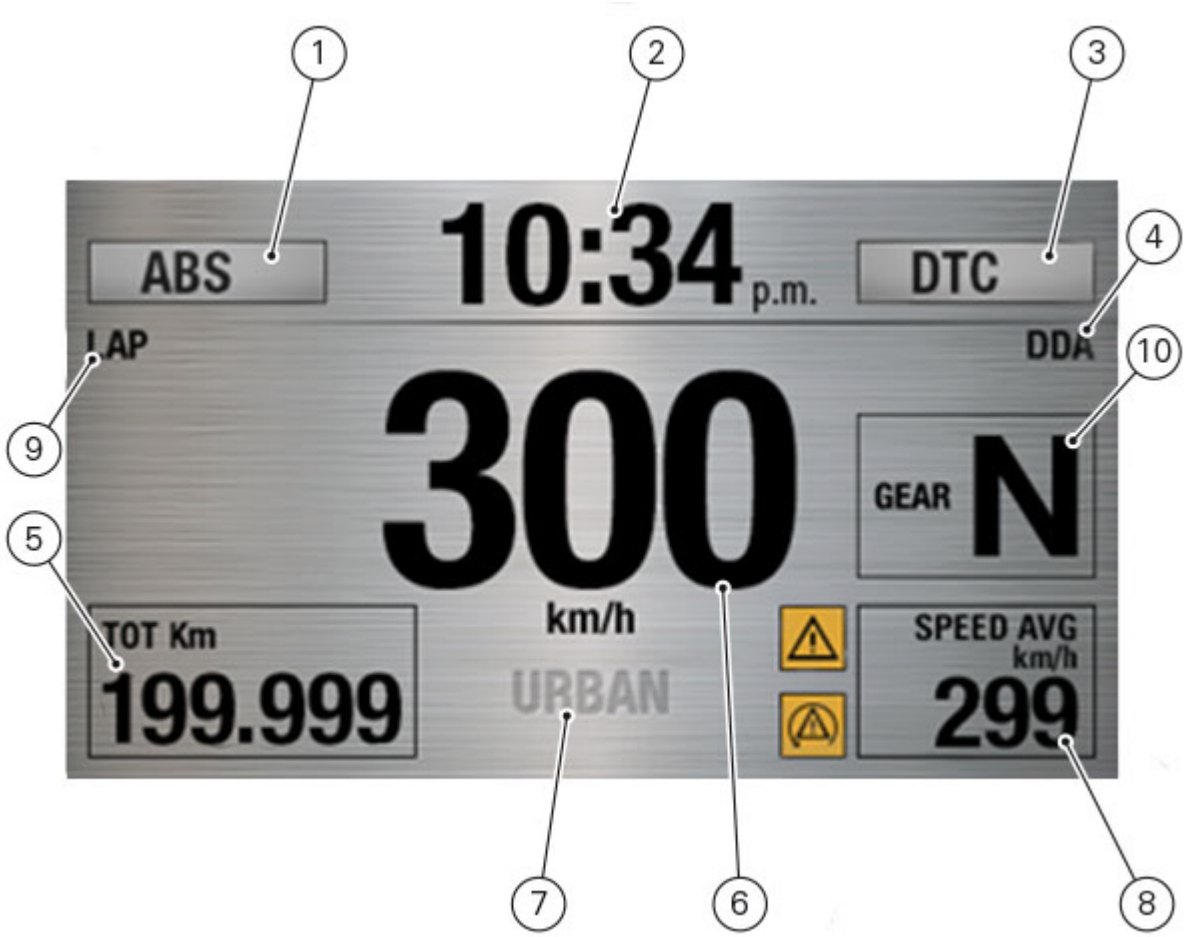

From the main screen, with CORE layout, press button (A) on LH switch to view Menu 1 information (5).

- Odometer (TOT);
- TRIP 1;
- TRIP 2;
- TRIP FUEL (when function is active);
- TRIP TIME;
- Lap time (LAP) (if function is active).

Press button (B) on LH switch to view Menu 2 information (8).

- Average fuel consumption (CONS. AVG);
- Instantaneous fuel consumption (CONS.I);
- Average speed (SPEED AVG);
- Air temperature;
- Engine coolant temperature.

FULL

Data displayed on the main screen for FULL layout are as follows:

1 ABS ON/OFF indication.
2 Clock.
3 DTC level indication (ON) or DTC OFF indication.
4 DDA ON indication (only if present).
5 Menu 1 (Odometer, Trip 1, Trip 2, Trip Fuel, Trip Time, Lap time - only if active).
6 Motorcycle speed.
7 Set Riding Mode.
8 Menu 2 (Instantaneous fuel consumption, Average fuel consumption, Average speed, Trip time, Ambient air temperature, Engine temperature).
9 LAP indication (only if active).
10 Rpm bargraph.
11 Gear indication.
12 Engine coolant temperature indication (not present in CHINA version).

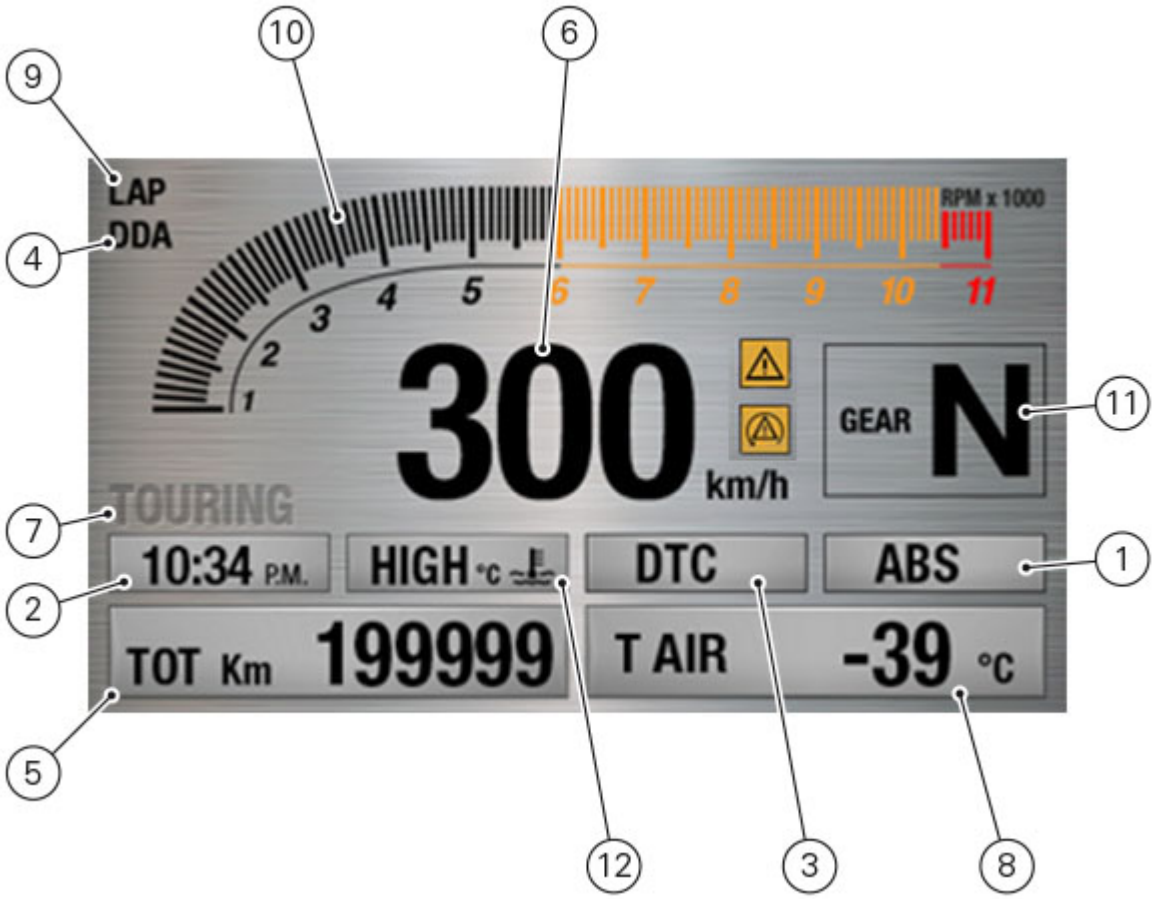

From the main screen, with FULL layout, press button (A) on LH switch to view Menu 1 information (5).

- Odometer (TOT);
- TRIP 1;
- TRIP 2;
- TRIP FUEL (when function is active);
- TRIP TIME;
- Lap time (LAP) (if function is active).

Press button (B) on LH switch to view Menu 2 information (8).

- Average fuel consumption (CONS. AVG);
- Instantaneous fuel consumption (CONS.I);
- Average speed (SPEED AVG);
- Air temperature;

TRACK

Data displayed on the main screen for TRACK layout are as follows:

1 ABS ON/OFF indication.
2 Menu 1 (Odometer, Trip 1, Trip 2, Trip Fuel, Trip Time, Clock, Lap time - only if active).
3 DTC level indication (ON) or DTC OFF indication.
4 DDA ON indication (only if present).
5 Set Riding Mode.
6 Motorcycle speed.
7 LAP indication (only if active).
8 Rpm bargraph.
9 Gear indication.

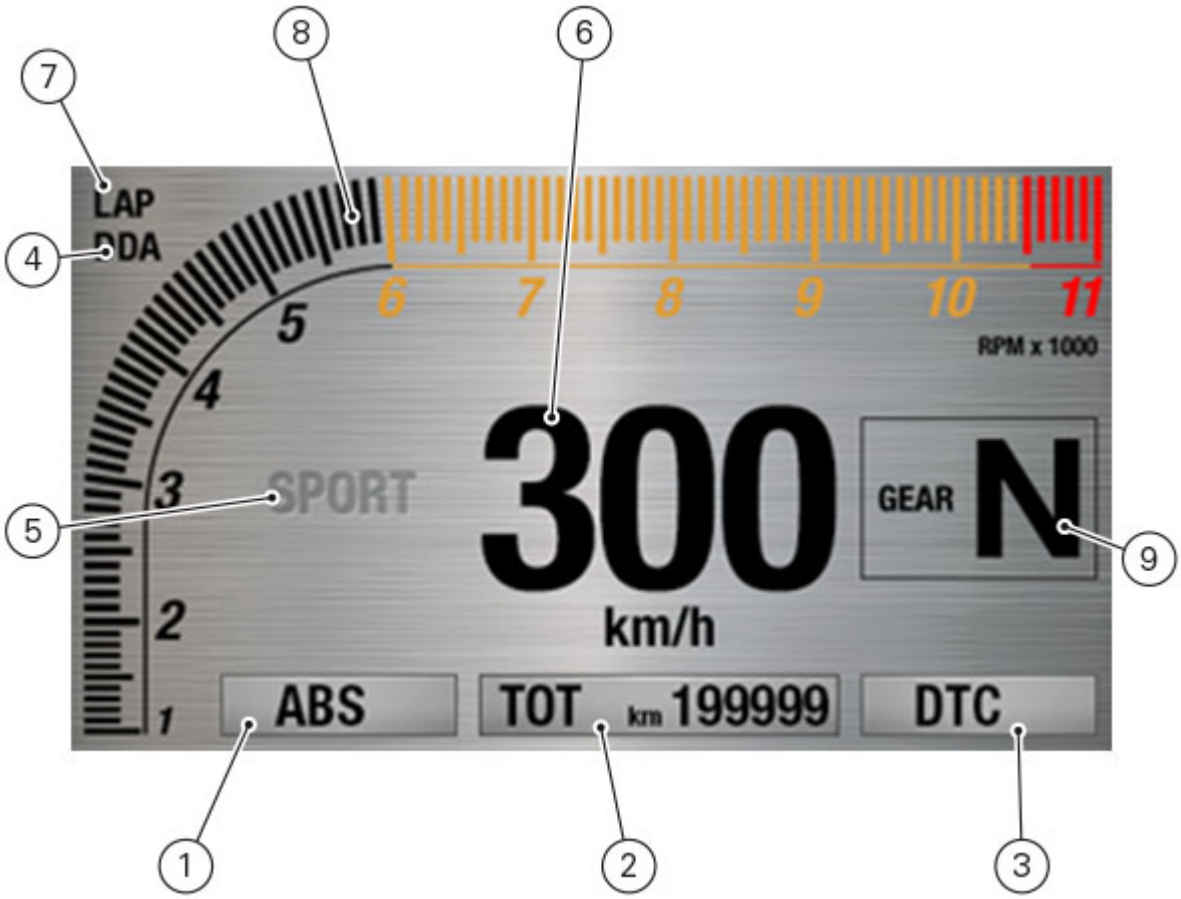

From the main screen, with TRACK layout, press button (A) on LH switch to view Menu 1 information (2).

- Odometer (TOT);
- TRIP 1;
- TRIP 2;
- TRIP FUEL (when function is active);
- Average fuel consumption (CONS. AVG);
- Instantaneous fuel consumption (CONS.I);
- Average speed (SPEED AVG);
- TRIP TIME;
- Clock;
- Lap time (LAP) (if function is active).
- Air temperature;
- Engine coolant temperature.

MODES AND SETTINGS

The instrument panel stores Menu 1 and Menu 2 settings in use upon KEY-OFF. On the following KEY-ON, previously stored Menu 1 e Menu 2 pages are displayed.
In case of sudden and unexpected power OFF, the instrument panel displays the default settings for Menu 1 and Menu 2 upon the following KEY-ON; in particular:

- Menu 1 default page = Odometer;
- Menu 2 default page (Core and Full modes only) = Average fuel consumption.

Upon KEY-ON, for every display layout, instrument panel shows for 10 seconds in Menu 1 the "Odometer" page and then shows the page saved upon previous KEY-OFF.

When the standard screen of set layout is displayed, hold the button (B) for 3 seconds, when actual motorcycle speed is <= (lower than or equal to) 20 km/h, to enter the Setting menu, where you can set any function.

Important
You can enter the SETTING MENU only if vehicle actual speed is <= (lower than or equal to) 20 km/h. Within the SETTING MENU, if vehicle actual speed exceeds 20 km/h, the instrument panel automatically quits the menu and

shows the standard screen.

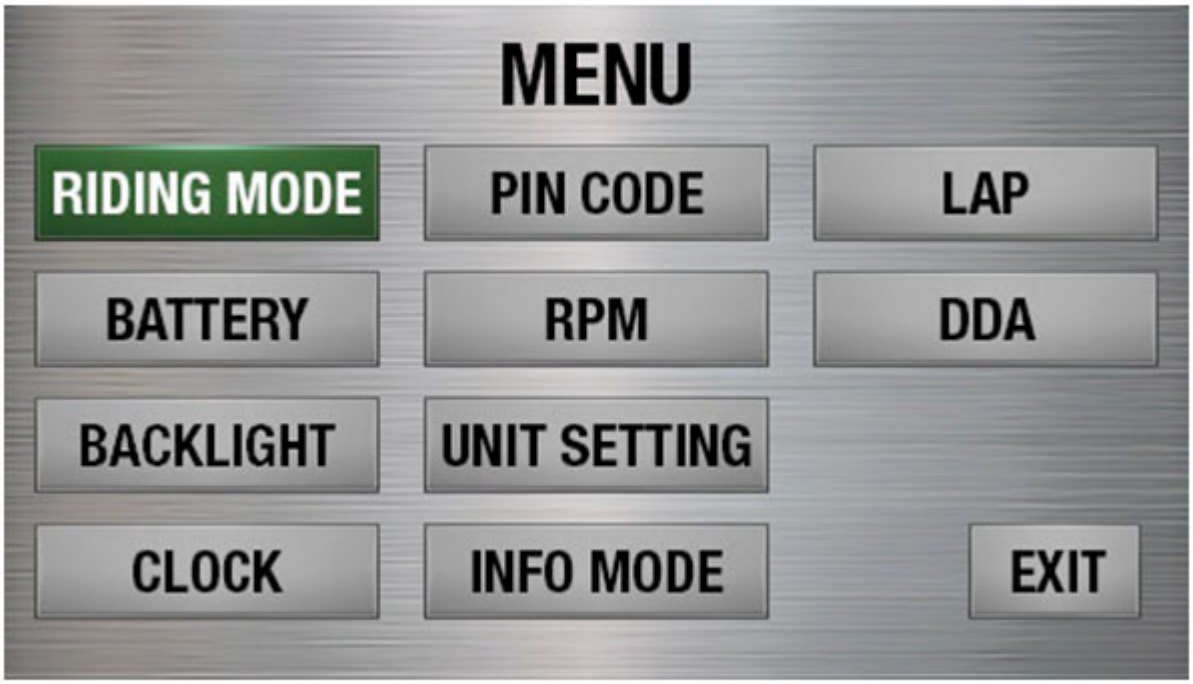

If the key is not acknowledged upon Key-ON and once the check routine is over, the following will happen:

- if the PIN CODE function is not active, the instrument panel skips the warning light check, displays the standard screen with an E-LOCK error warning and does not allow accessing the Setting Menu;
- if the PIN CODE function is active, the PIN CODE function page is displayed on the instrument panel, allowing rider to enter the release code.



ODOMETER UPDATE

When replacing the instrument panel or the black box, restore the odometer value inside the replaced control unit so as to allow the correct displaying of the kilometres or miles covered by the vehicle.
When replacing the instrument panel or the black box it is **NECESSARY** to restore kilometres by transferring the datum from the control unit still left inside vehicle to the new control unit just replaced.
This operation must be carried out with the DDS2 diagnosis instrument, or through a special procedure with KWP2000 inputs.
The instrument panel will continue displaying flashing dashes instead of the odometer value until this operation is carried out.
Once the procedure is completed, its positive outcome will be signalled by the odometer datum displayed on instrument panel.

Note
All instrument panel functions can be displayed and downloaded in the .pdf file from the download area.

Instrument panel

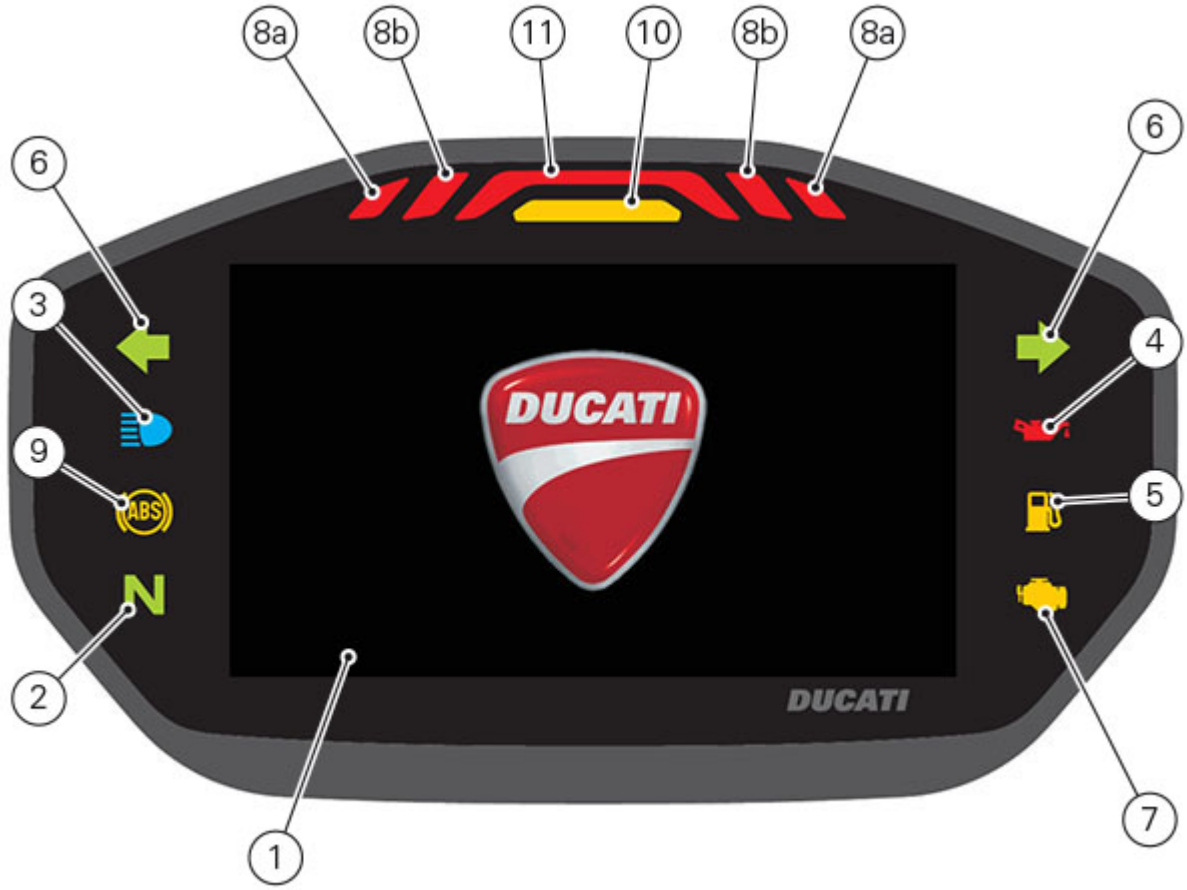

1) Display;
2) N NEUTRAL LIGHT (GREEN): it comes on when in neutral position;
3) HIGH BEAM LIGHT (BLUE): it comes on to indicate that the high beam lights are on and when the flasher is activated;
4) ENGINE OIL PRESSURE LIGHT (RED): it comes on when engine oil pressure is too low. It must turn on at "KEY-ON", but must turn OFF a few seconds after the engine has started. It may shortly come on when the engine is hot, however, it should go out as the engine revs up.

Important
If the ENGINE OIL light stays ON, stop the engine or it may suffer severe damage.

5) FUEL WARNING LIGHT (AMBER YELLOW): it comes on when fuel is low and there are about 2.5 litres of fuel left in the tank;
6) TURN INDICATOR LIGHTS (GREEN): they illuminate and flash when the turn indicator is in operation;
7) "ENGINE/VEHICLE DIAGNOSIS - EOBD" LIGHT (AMBER YELLOW): it turns on in the case of "engine" errors and in some cases will lock the engine;
8) GENERAL WARNING LIGHTS (RED): the lights (8a) turn on when RPM value reaches the first threshold before the rpm limiter kicks in; the lights (8b) turn on when RPM value reaches the second threshold before the rpm limiter kicks in;
9) ABS LIGHTS (AMBER YELLOW); they turn on to indicate that ABS is disabled or not functioning.

Engine off / speed below 5 km/h		
Light OFF	**Light flashing**	**Light steady on**
—	ABS disabled with the menu function "ABS"	ABS enabled, but not functioning yet

Engine on / speed below 5 km/h		
Light OFF	**Light flashing**	**Light steady on**
—	ABS disabled with the menu function "ABS"	ABS enabled, but not functioning yet

Engine on / speed above 5 km/h		
Light OFF	**Light flashing**	**Light steady on**
ABS enabled and functioning	ABS disabled with the menu function "ABS"	ABS disabled and not functioning due to a problem

10) DTC INTERVENTION (AMBER YELLOW).

	DTC
No intervention	Light OFF
Spark advance cut	Light steady ON
Injection cut	Light steady ON

11) OVER REV / IMMOBILIZER / ANTI-THEFT SYSTEM (RED)

	Over rev
No intervention	Light OFF
First threshold (N RPM before the limiter kicks in)	Light steady ON
Limiter	Light ON flashing

Note
Each calibration of the Engine Control Unit may have a different setting for the thresholds that precede the rev limiter and the rev limiter itself.

	Immobilizer

Key-ON status	Light OFF
Key-OFF status	Light ON flashing
Key-OFF status for over 12 hours	Light OFF



12) GENERIC ERROR LIGHT (AMBER YELLOW): it turns on when there are any "vehicle" errors, i.e. active errors triggered by any control unit other than the engine control unit.

13) DTC STATUS LIGHT (AMBER YELLOW).

This light indicates DTC system enabling/disabling status.

Speed below or equal to 5 Km/h		
Light OFF	**Light flashing**	**Light steady on**
DTC enabled and functioning	DTC enabled, but not functioning yet, being initialised	DTC disabled and/or not functioning due to a fault in the BBS control unit
Speed above 5 Km/h		

Light OFF	**Light flashing**	**Light steady on**
DTC enabled and functioning	DTC enabled but there is a fault in the system causing degraded performance	DTC disabled and/or not functioning due to a fault in the BBS control unit

Note

All instrument panel functions can be displayed and downloaded in the .pdf file from the download area.

Refitting the front wheel

When all the necessary inspections have been completed, refit the wheel as follows.
Duly lubricate and insert bearings (10), seals (9) and spacers (7) on wheel hub left-hand side and (8) on wheel hub right-hand side.



Fit the complete wheel between the fork legs.
Lubricate the shank and thread of the wheel shaft (6).
Take pin (6) fully home into the wheel hub.



Fit the washer (3) on the end of the wheel shaft.
Grease thread and underhead of the locking nut (3) and then screw it on.
Tighten nut (4) to a torque of 63Nm±5%.

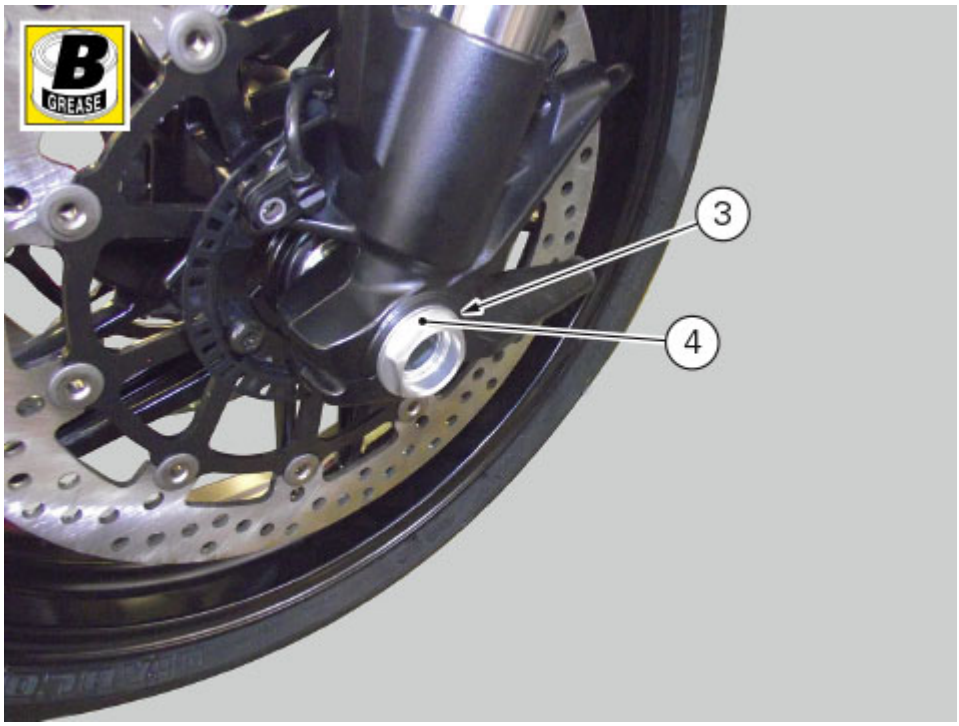

Apply the product to screws (1) thread and underhead.
After having positioned the two spacers (11), tighten the two retaining screws (1) on brake callipers.
Operate the front brake lever two or three times.
Hold the lever pulled towards the handgrip and simultaneously tighten the screws (1) to a torque of 45Nm±5%.



Before tightening the screws (5), lower the bike to the ground and push up and down on the handlebar to load the suspension; so the fork legs will become properly seated onto the wheel shaft.
After having applied the indicated product, tighten the screws (5) to a torque of 19Nm±5%, following a 1-2-1 sequence.

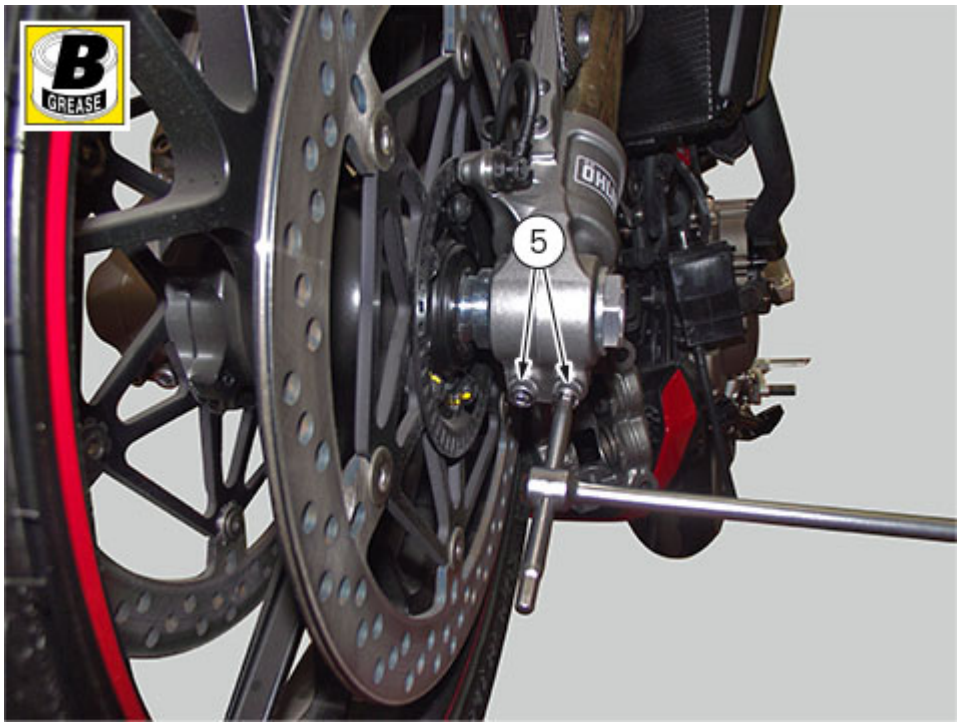
B
GREASE
5

Overhauling the front wheel

Wheel bearings

Before checking the dimensions, check for wear on wheel hub bearings. Check for wear by hand after cleaning and degreasing the bearings in their seats.
Turn the internal ring and check that the internal balls move freely: any irregularity indicates deformations like those indicated in values "X" and "Y".
An excessive wear can cause vibrations and instability of the vehicle and therefore it is necessary to replace the bearing.

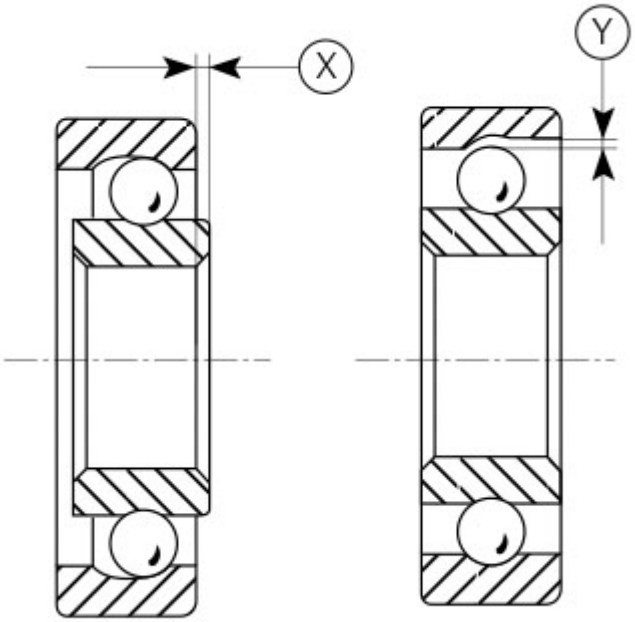

To remove the bearings (10) and the dust seals (9) from the wheel hub follow the instructions below.
Position a drift (A) against the inner ring of the bearing (10).
Tap with a hammer until removing the bearing (10).
Apply the drift at different points to facilitate the removal.

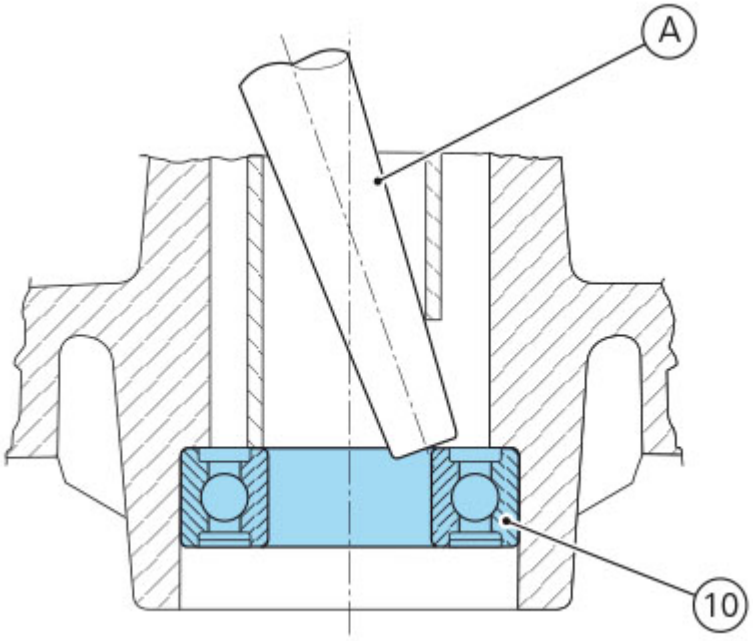

Important

Once removed, the used bearings and sealing rings must not be refitted.
Before fitting new bearings, check that the seat is clean and free from scoring and damage.

Grease the bearing seat and then push the new bearing into its seat.
Using a tubular drift (B) that only bears on the outer ring of the bearing (10) to drive the latter fully into its seat.

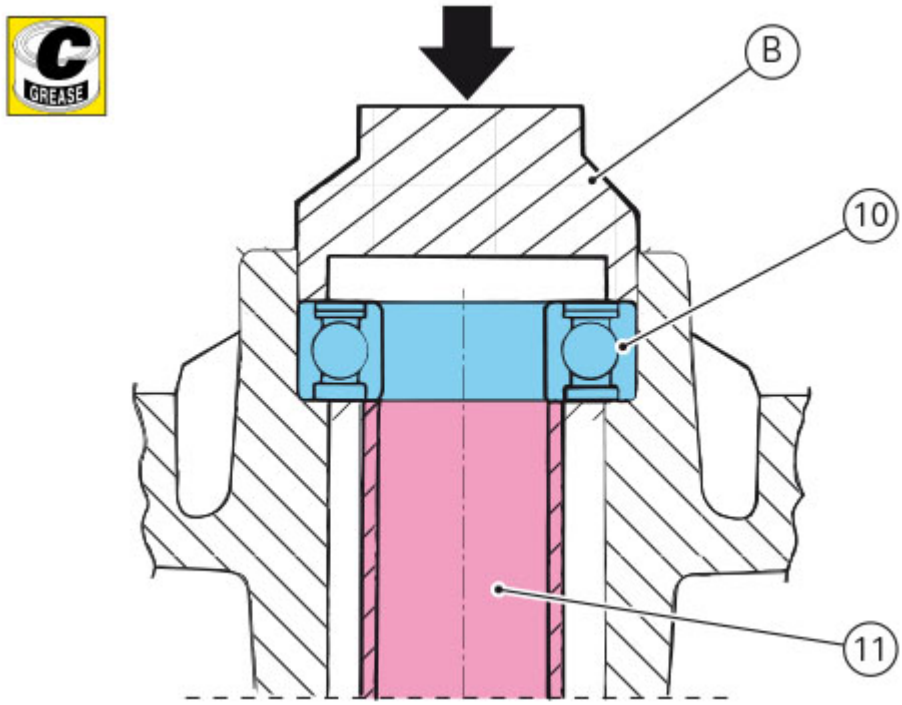

Use the same method to install the dust seals (9).
Ensure that spacer (11) is fitted between the two wheel hub bearings.

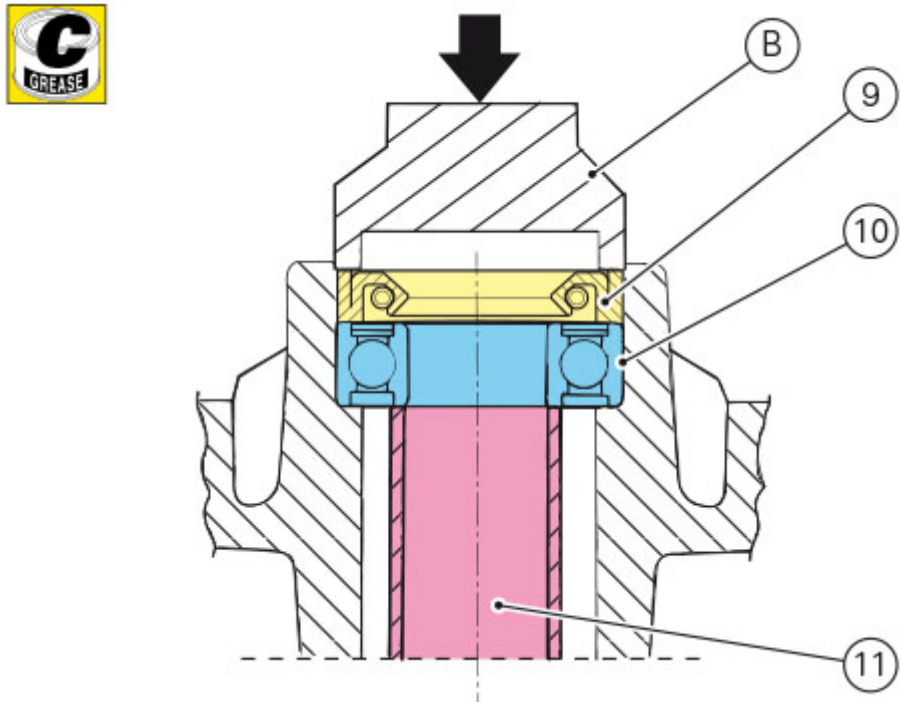

Note
Wheels must be rebalanced after repair, maintenance and overhaul operations.

Inspecting the wheel shaft

Check the wheel shaft for straightness.
Turn the shaft on a reference surface and measure maximum distortion using a feeler gauge, comparing it with the reference values (Front wheel).
If non conforming, replace wheel shaft.

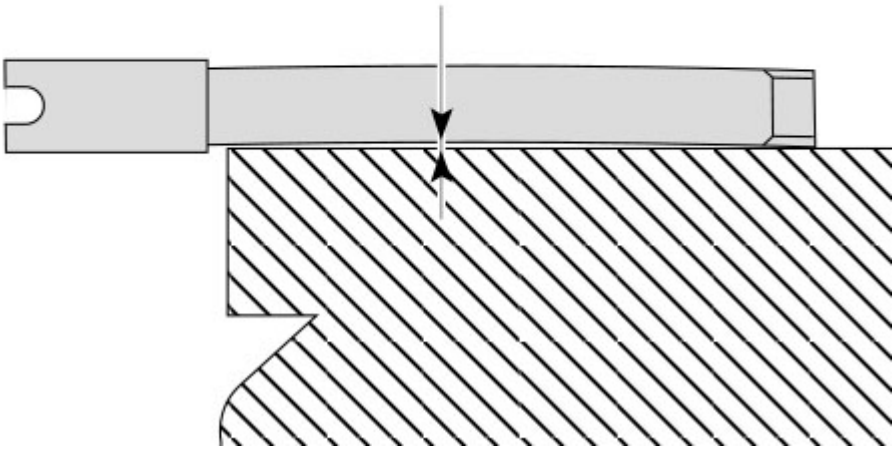

Overhauling the wheel rim

After you have checked the bearings, check the rim as follows.
Visually inspect the rim for cracks, scoring and deformation: change the rim if damaged.
Insert the shaft in the wheel and position it on two fixed reference blocks.
Using a dial gauge, measure rim runout and out-of-round with respect to the shaft axis.

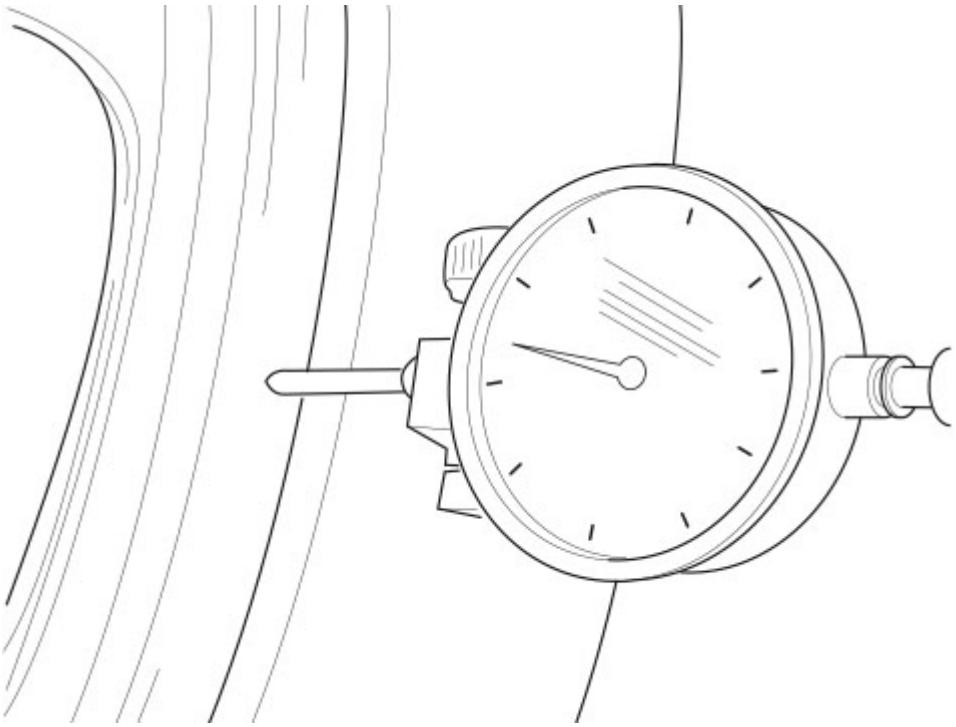

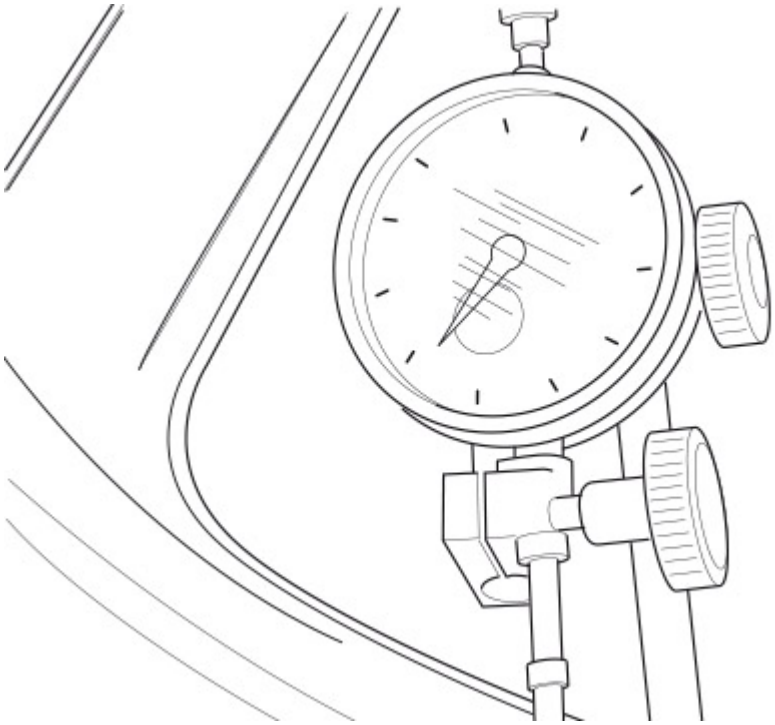

If the values measured are not within the tolerance limits, replace the wheel (Front wheel).

Removing the front wheel

Support the bike so that the wheel to be removed is raised from the ground.
Working on both sides, remove front brake callipers by loosening the two screws (1) securing the calliper to the fork leg without disconnecting them from the hoses and collecting spacers (11).



Warning

Do not operate the brake lever when the callipers are removed. This can cause the brake pad pistons to come out.

Loosen and remove nut (4) on wheel shaft left side.
Collect washer (3).

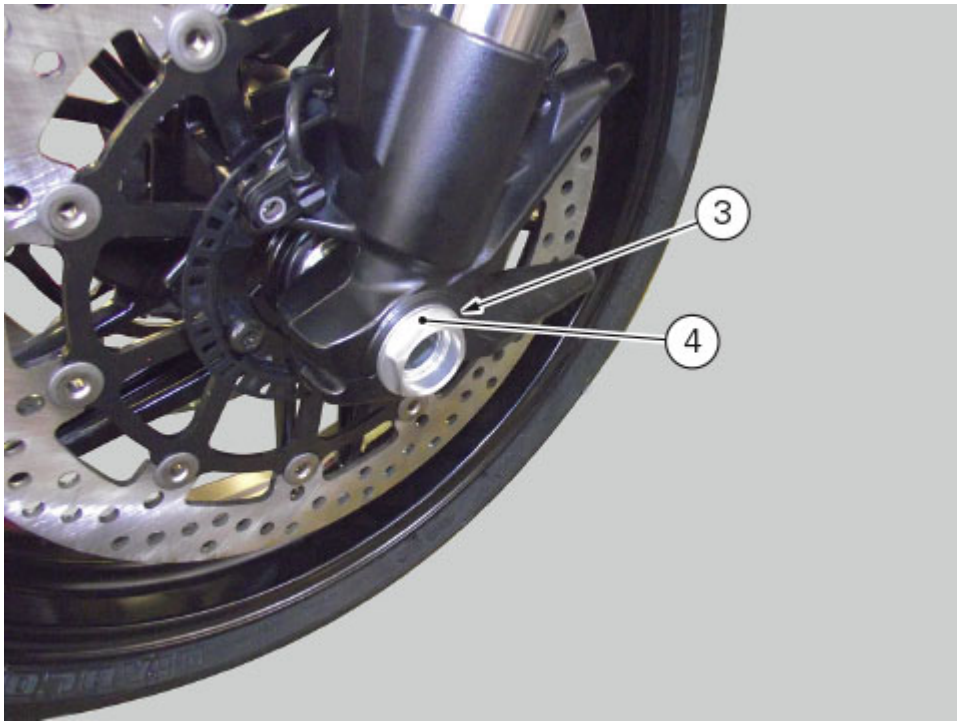

Working on both sides, loosen screws (5) securing pin on fork legs.
Working from the left-hand side, use a plastic mallet to drive the wheel shaft (6) out from the opposite side and remove it.

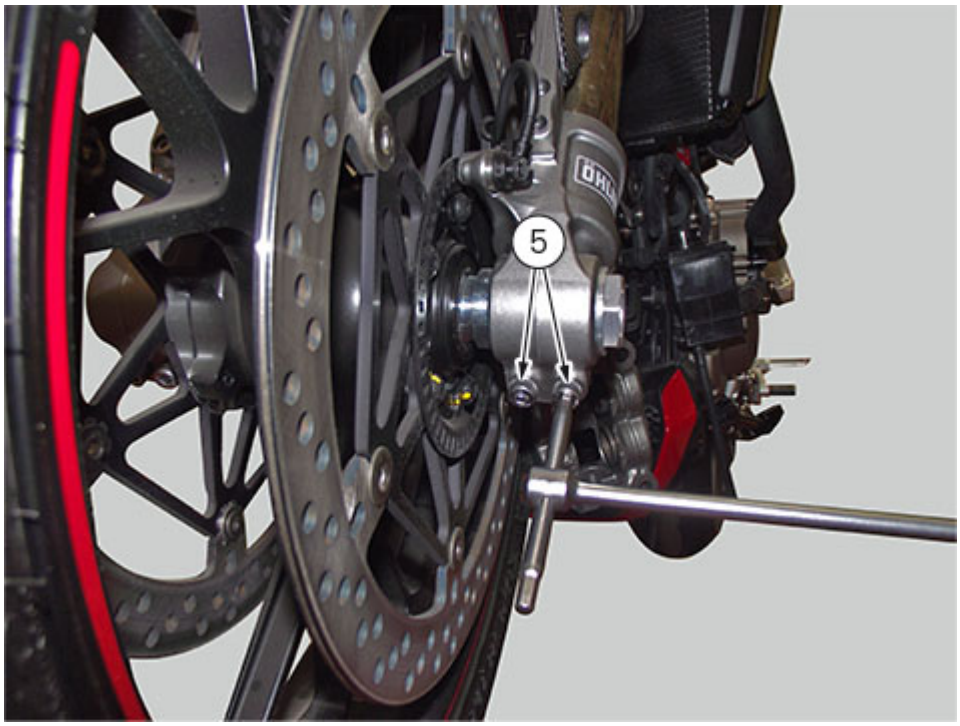



Slide out wheel and keep spacers (7) on left-hand and (8) on right-hand sides.
If necessary, working on both sides, remove dust seals (9) and bearings (10).


8
9
10
10
9
7

Refitting the rear wheel

Warning

The following procedure refers to one version of the vehicle, but applies to both of them.

Lubricate the wheel shaft threaded end with recommended grease.
Install wheel inside shaft by coupling pins (B) with their seats (A) on wheel (5).

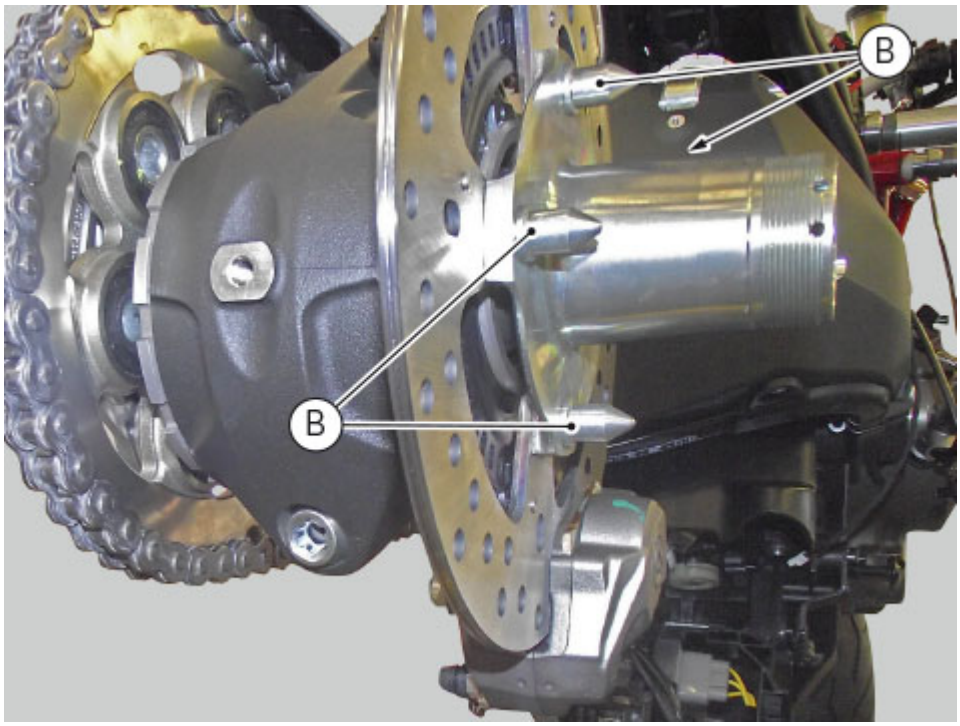





Fit the tapered spacer (4) with the tapered side facing the wheel, and washer (3); apply the recommended grease to the nut (2) and start nut (2) by hand.
Tighten the nut (2) to a torque of 230Nm±5%, checking that the hole on the nut is aligned with one of those on the wheel shaft.
Fit the clip (1), fitting the end (X) into one of the holes in the shaft, aiming it as shown in the figure.



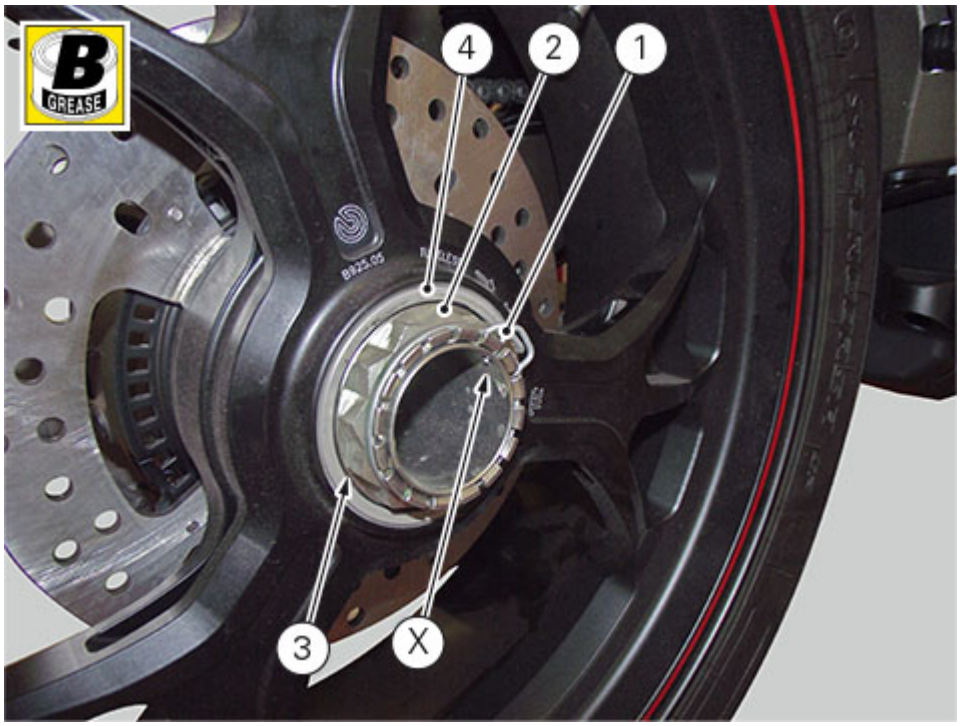
B
GREASE
4
2
1
3
X

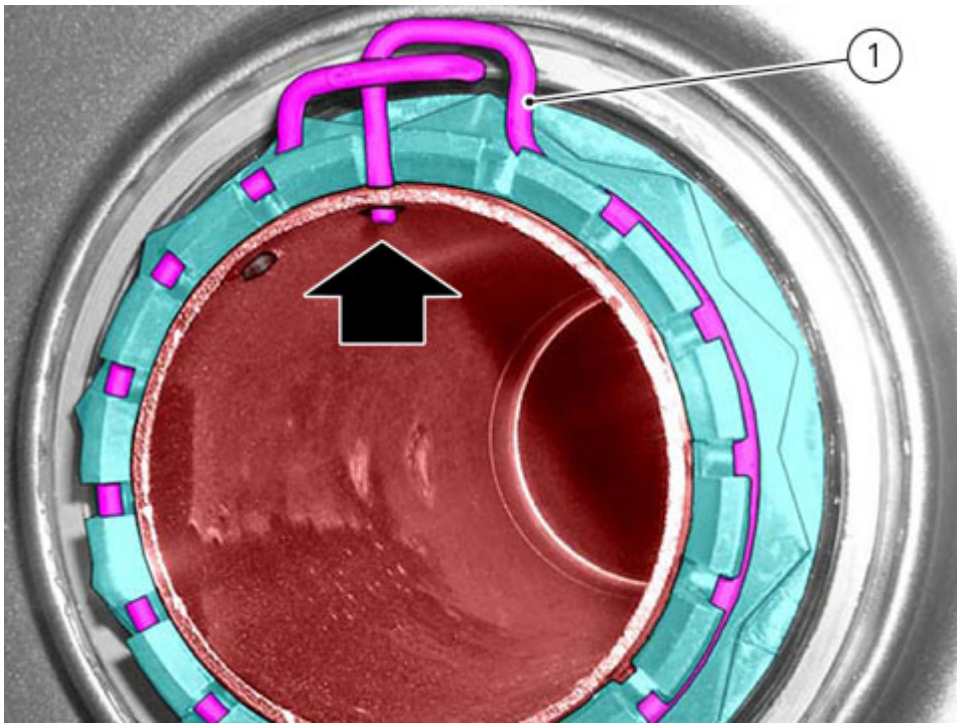
1

Overhauling the rear wheel

Check wheel rim conditions.
As the wheel rim has no bearings, it should be supported using the service tool (A) no. **88713.1073**.

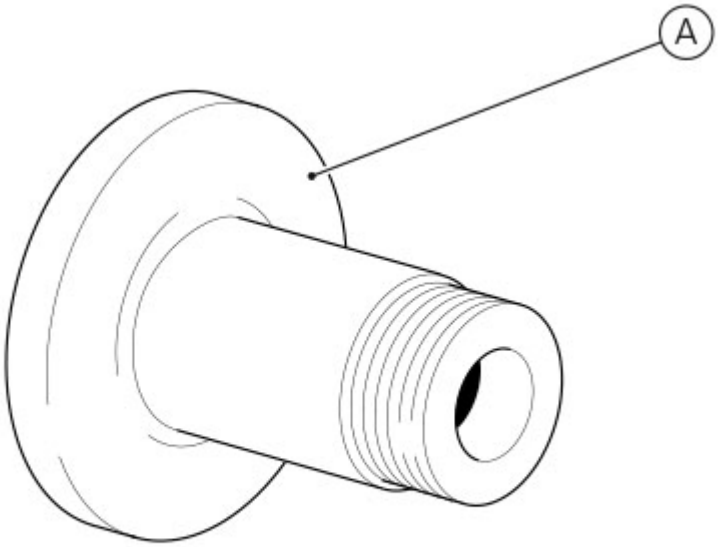

Overhauling the wheel rim

Inspect the wheel rim as follows.
Visually inspect the rim for cracks, scoring and deformation: change the rim if damaged.
Fit the wheel rim on the service shaft no. **88713.1073** using the original fasteners.
Using a dial gauge, duly supported, measure rim runout and out-of-round relative to the shaft axis.
If the values measured are not within the tolerance limits, replace the rim (Rear wheel).

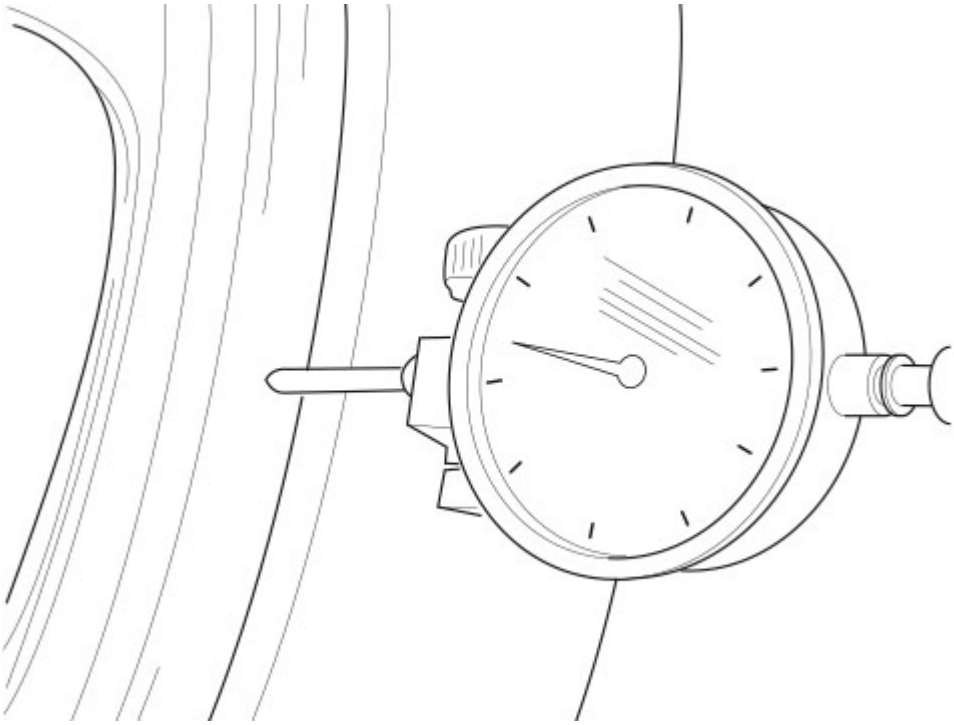

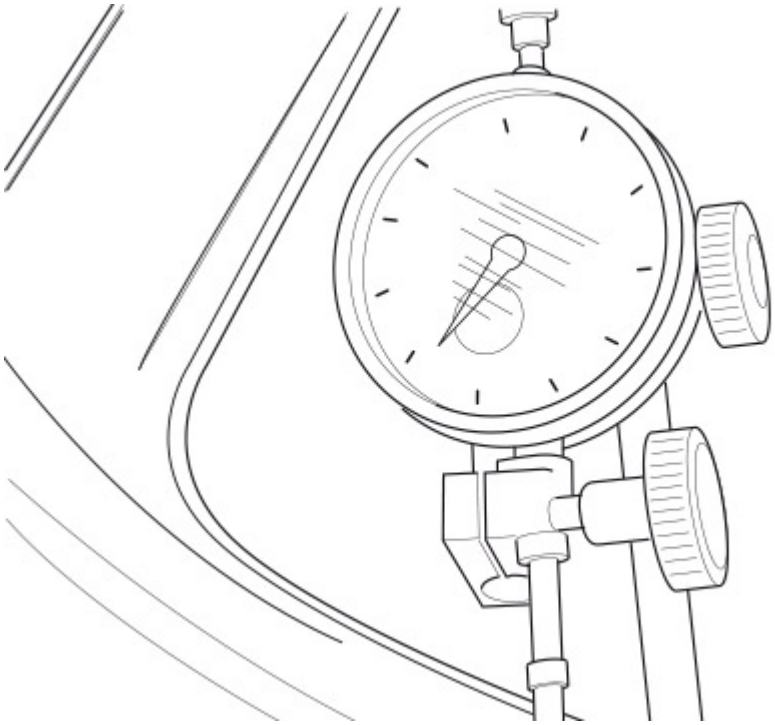

Removing the rear wheel

Warning

The following procedure refers to one version of the vehicle, but applies to both of them.

Remove the silencer (Removing the silencer).

Place the motorcycle on the rear service stand and engage the 1st gear.
Remove clip (1) from seat (X).
Using a suitable socket, loosen the wheel nut (2).
Fully unscrew the nut (2) and then slide out washer (3) and tapered spacer (4).
Remove the rear wheel (5) from the motorcycle.

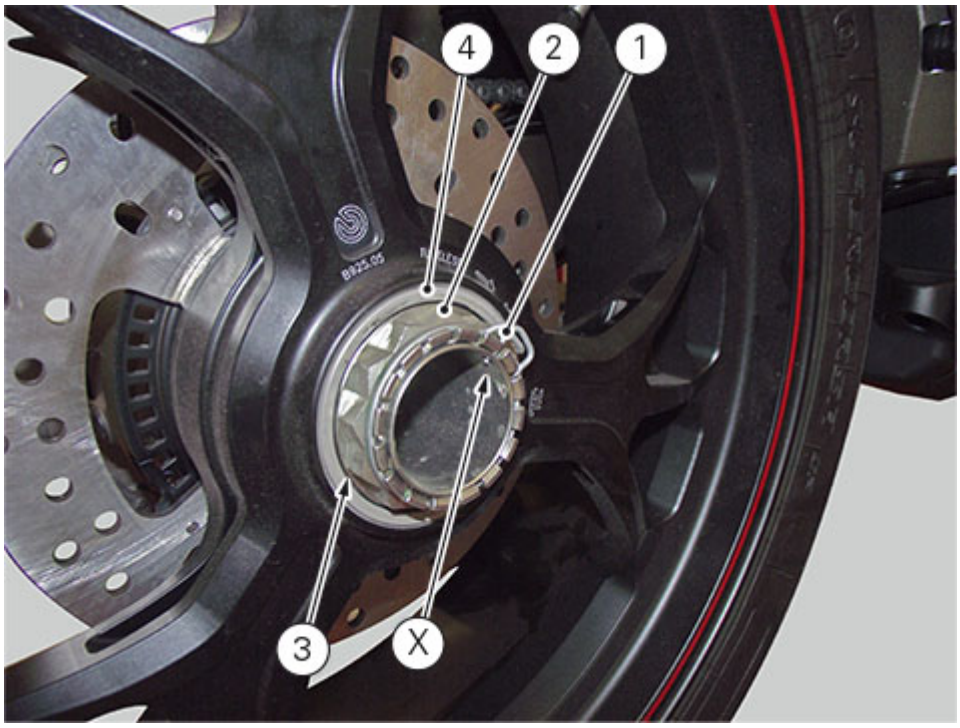

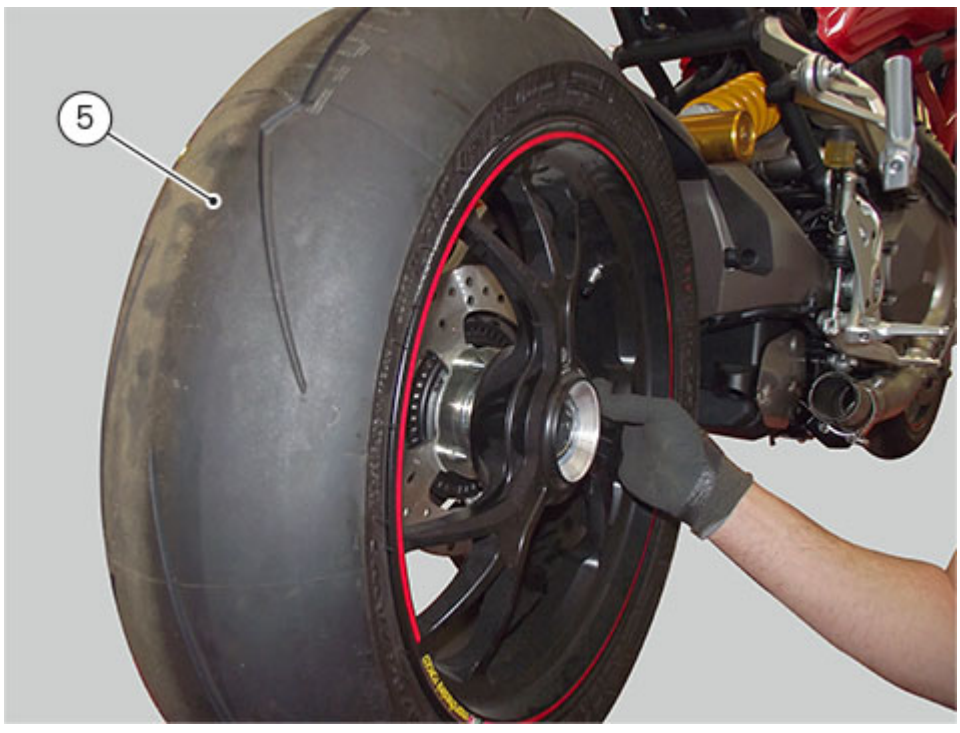


4
3
2
1

Refitting the front brake system

Refit the front brake master cylinder (Refitting the front brake master cylinder).
Upon the system refitting, pay attention to the orientation of the hose unions on the master cylinder and on the callipers.

Warning

If incorrectly positioned, hoses can affect brake operation and foul moving parts. Position the component as shown in the figure.

Position calliper-master cylinder hose unions (7) on front brake callipers.
Position RH calliper — LH calliper hose unions (8) on front brake callipers.

Hose positioning on callipers

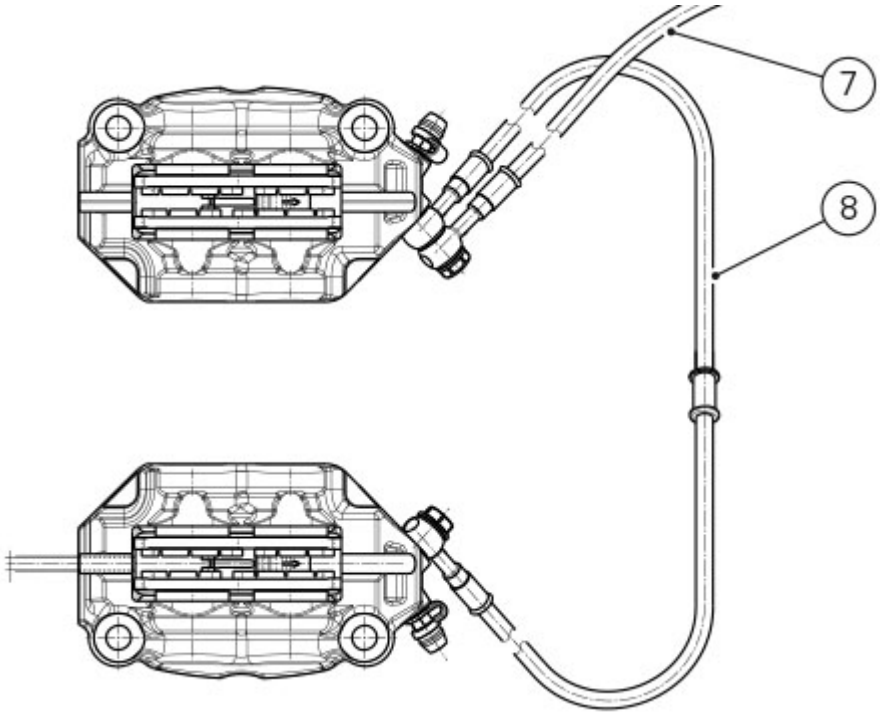

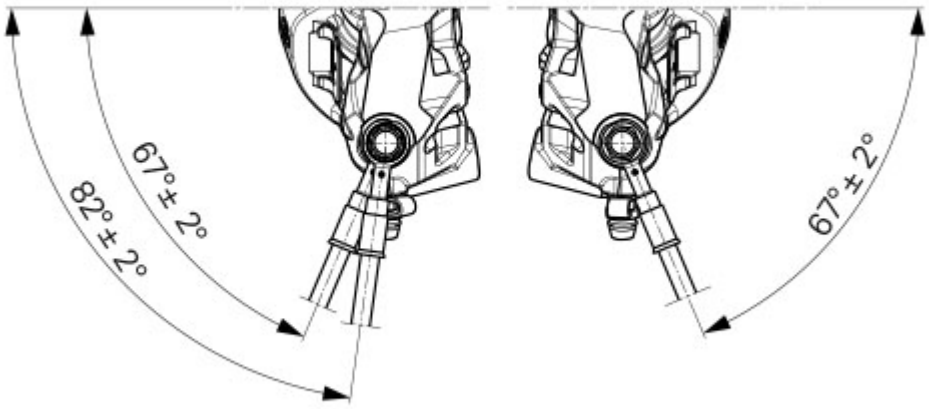

Tighten special screws (10) and (11) to a torque of 23Nm±10%.

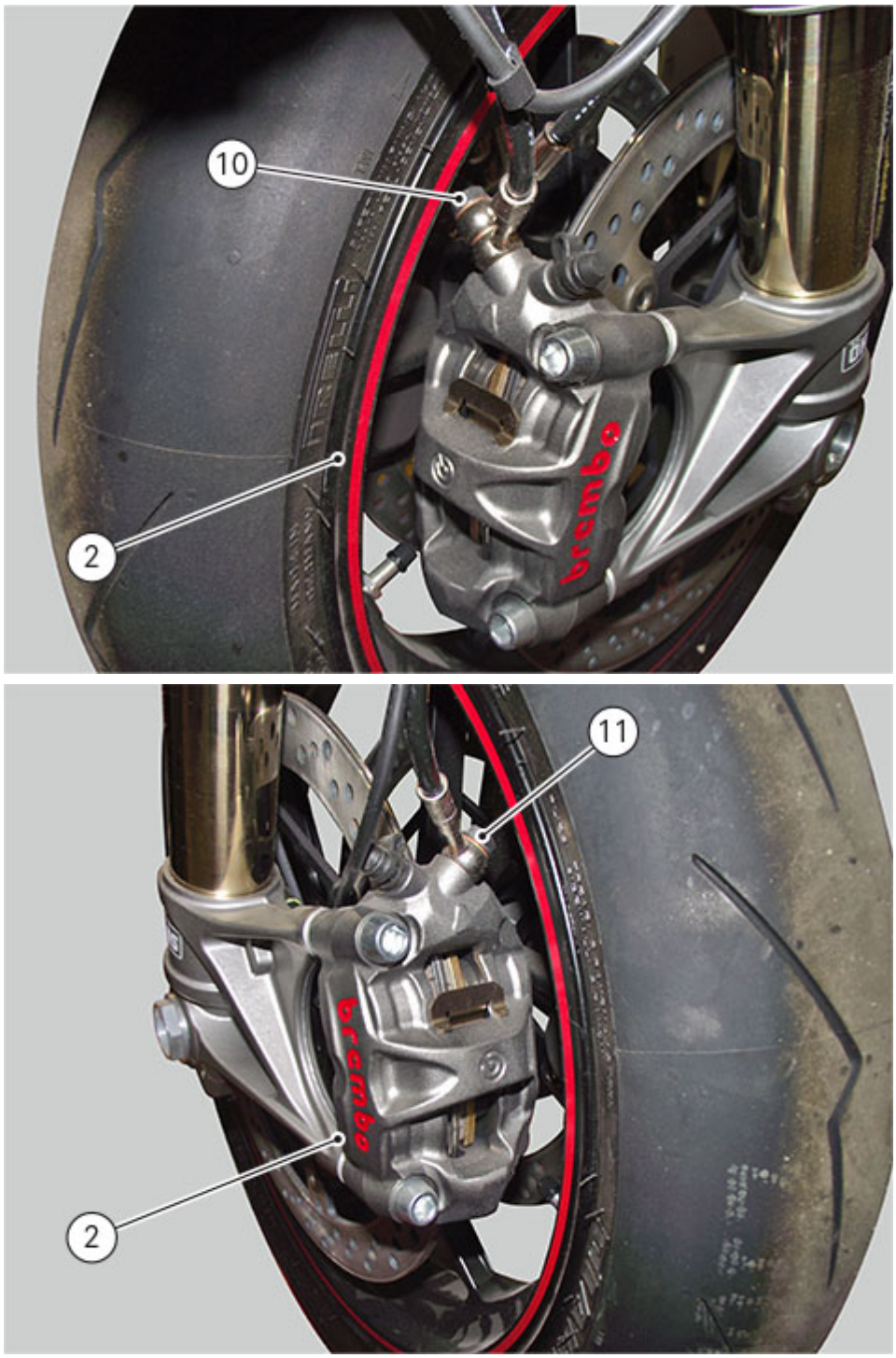

Working on both callipers (4), position spacers (A), apply the indicated product on screw thread (3), pre-tighten screws to a torque of 2Nm±10%, then tighten them to a torque of 45Nm±5%.

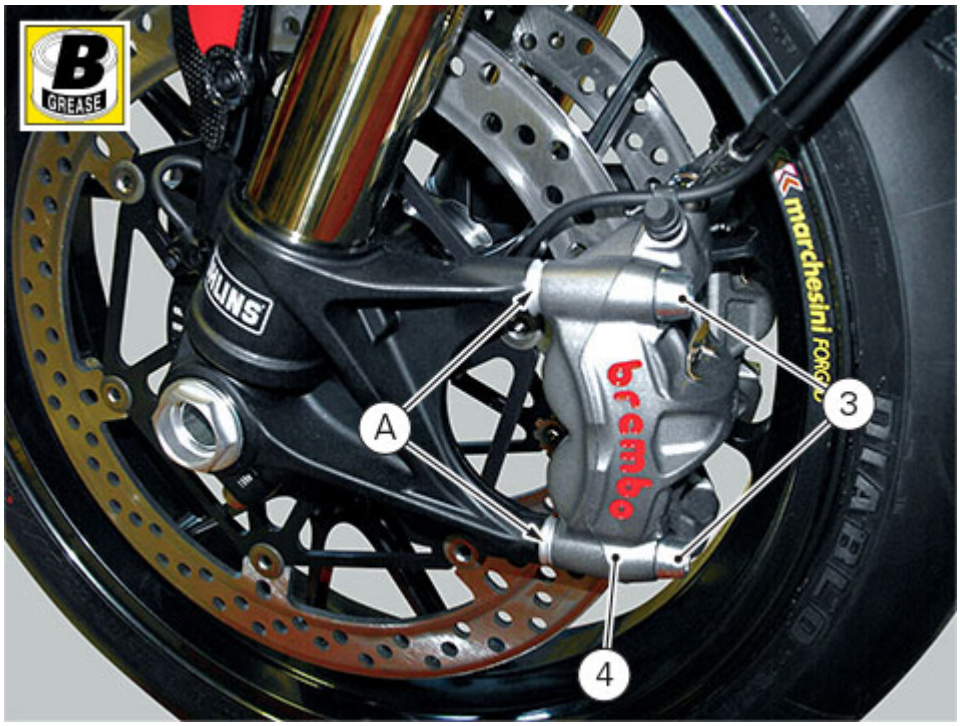

Slide the brake calliper — master cylinder hose (7) and the ABS cable (9) inside cable ring (2). Secure cable ring (2) to bottom yoke with screw (1).

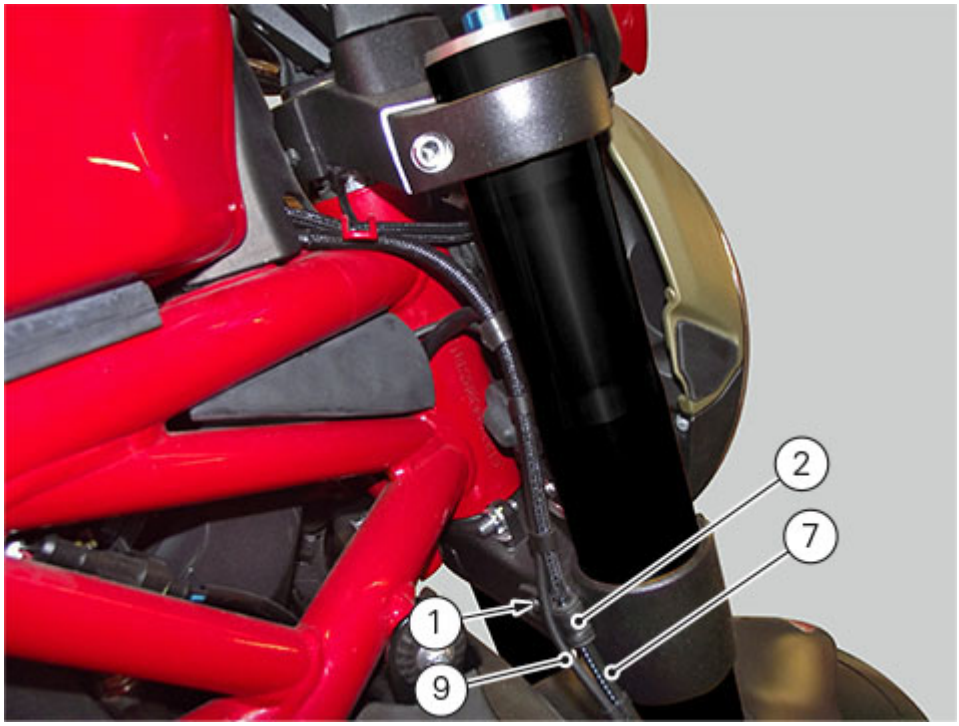

Slide the RH calliper hose (8) and the ABS sensor cable (9) inside cable rings (6), and tighten this latter with screw (5).

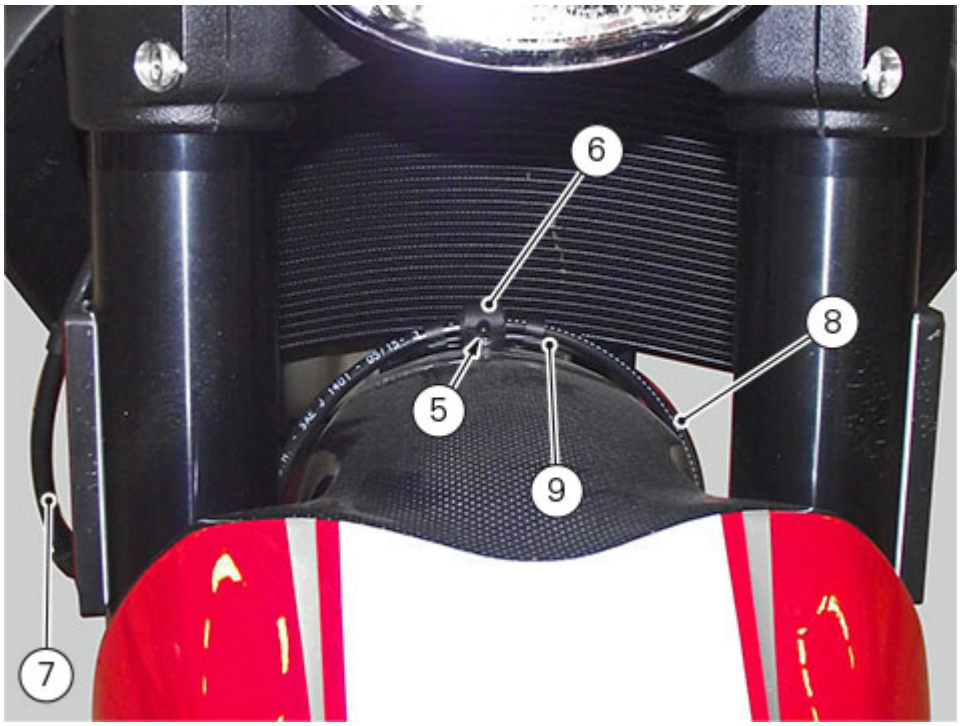

Re-arrange hoses and secure them inside cable rings as shown in the figure.

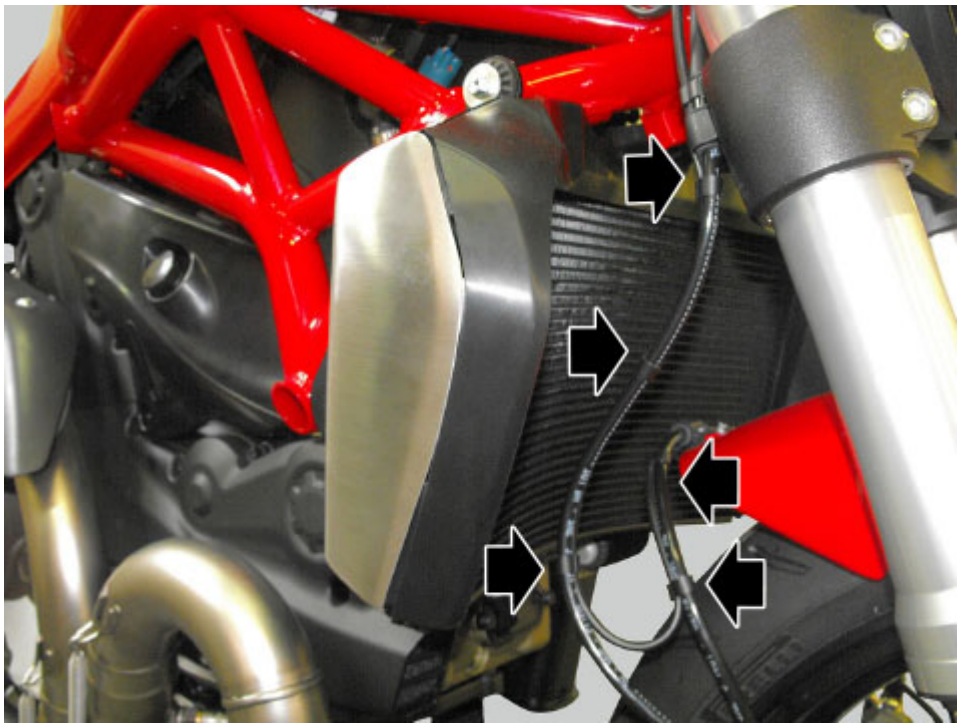

Refitting the brake discs

Before refitting the brake disc to the wheel, clean all contact surfaces thoroughly and apply a medium strength threadlocker on the threads of retaining screws (1).
Fit the phonic wheel (3) working on the LH side.
Tighten the screws (1) retaining the brake disc (2) to the wheel following a cross pattern.
Tighten screws (1) to a torque of 30Nm±5% (screws have pre-applied threadlocker; after the third tightening, replace screws with identical screws with pre-applied threadlocker).



Refit the wheel on the motorcycle (Refitting the front wheel).

Overhauling the front brake components

Important

The brake callipers manufacturer advises against servicing the brake callipers due to the safety critical nature of this component. Incorrect overhaul of this component could endanger rider safety.

Operations should be limited to replacement of the pads, fasteners and the bleed valve assembly.
The brake disc must be clean, without any signs of rust, oil, grease or dirt and no deep scoring.
To check the brake discs for wear follow the data detailed in chapter "**Technical data**".

Removing the brake discs

The front brake discs consist of an inner carrier, which is mounted to the wheel, and an outer rotor. Both parts must be replaced together as a pair.

Remove the front wheel (Removing the front wheel).

Undo the screws (1) securing the brake disc to the wheel, remove disc (2) and the phonic wheel (3) from the LH side.

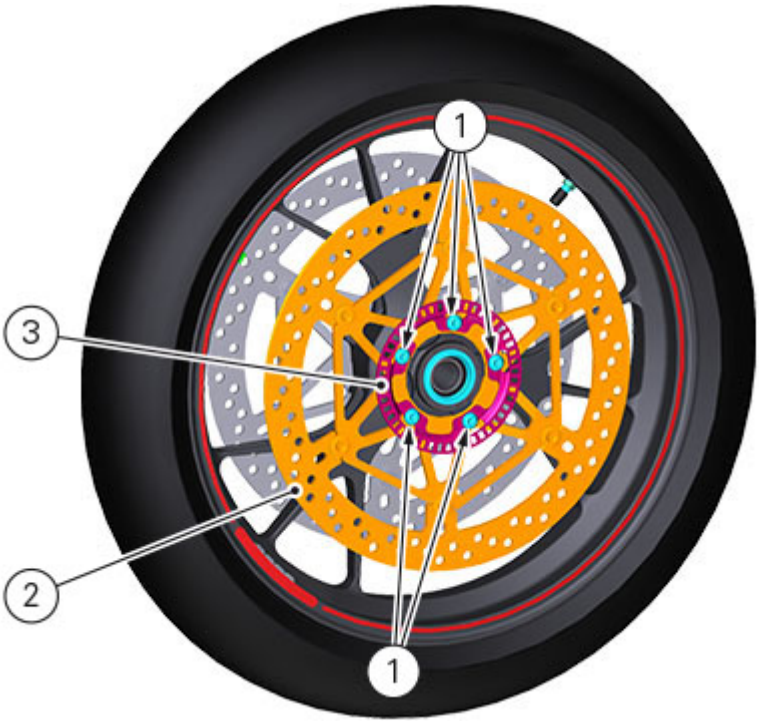

Removing the front brake system

Drain the front braking system (Changing the front brake system fluid).
Remove the RH rear-view mirror (Removing the rear-view mirrors).
Remove the front brake master cylinder (Removing the front brake master cylinder).

For the front ABS brake system, please also refer to Sections "ABS system operation information" and chapters "**ABS system components**" and "**ABS component maintenance**".

Loosen screw (1) and release cables from bracket (2) positioned on bottom yoke.

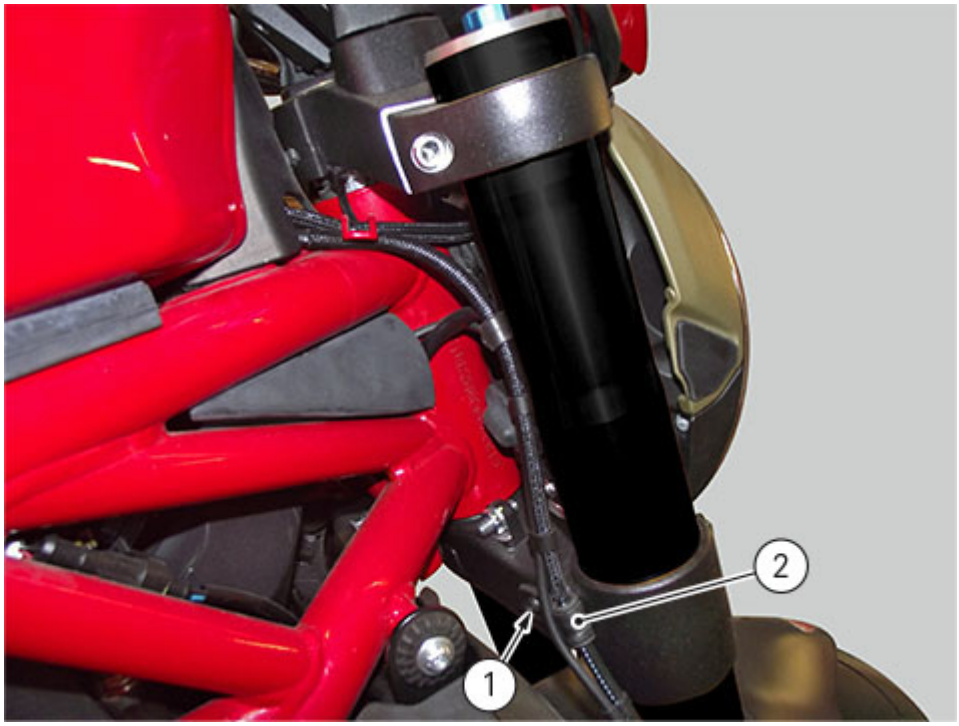

Release front brake hoses from cable rings.

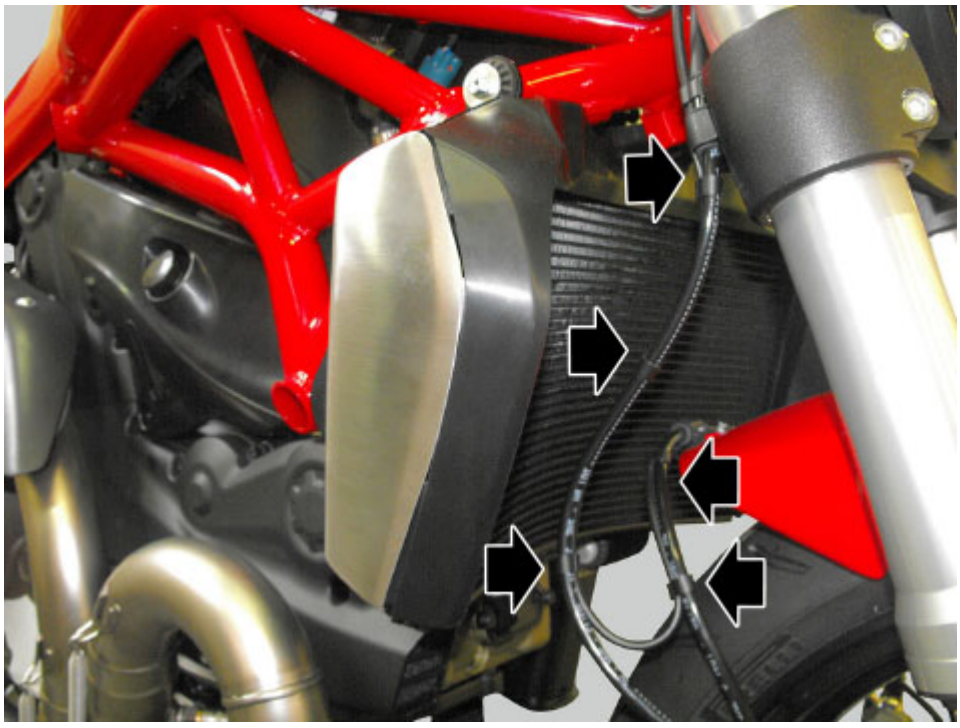

Working on both sides, loosen the two retaining screws (3) securing the front brake calliper (4) to the fork leg.
Repeat the same procedure on right-hand brake calliper.
Recover the two spacers (A), on both sides of vehicle, after having removed front brake callipers.

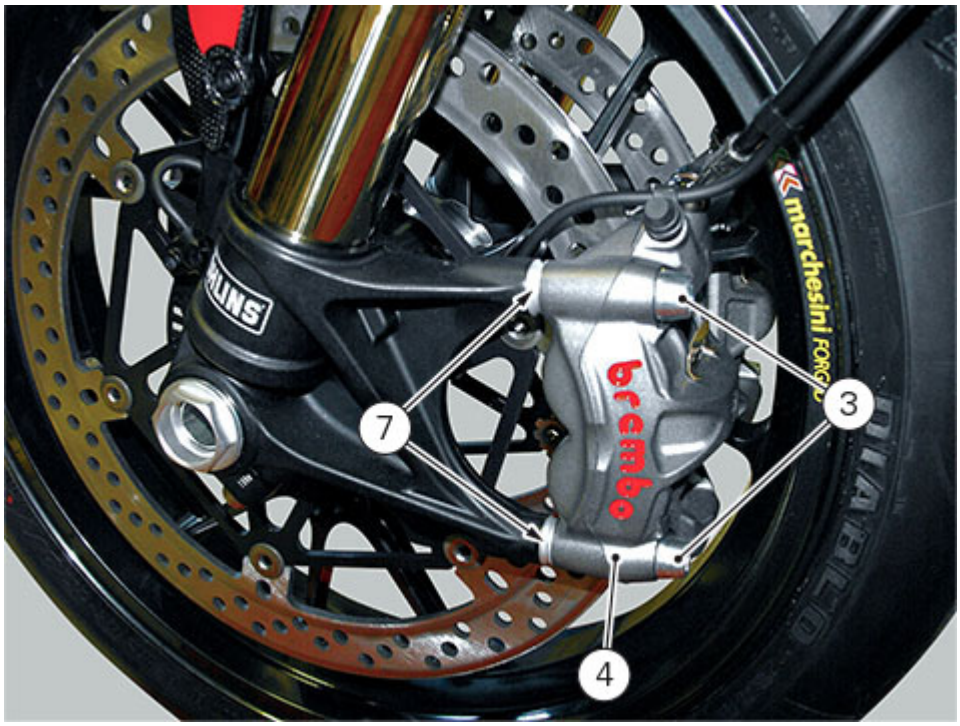

Loosen screw (5) and release brake hoses from cable rings (6).

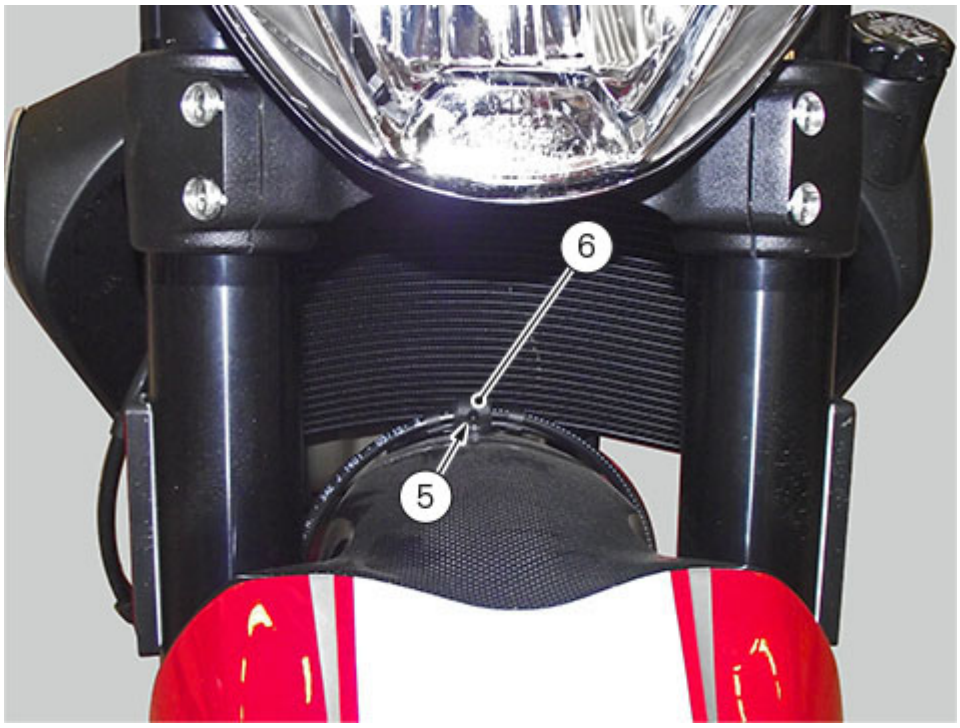

Maintenance operations

Warning

Brake fluid is corrosive and will damage paint. Avoid contact with eyes and skin. In case of accidental contact, wash thoroughly with water.

For all maintenance operations (wear check and replacement of brake pads, brake fluid replacement, etc.), refer also to chapter 4 (Maintenance operations).

Refitting the front brake master cylinder

Insert the front brake master cylinder unit on the right side of the handlebar so that the clamp internal edge matches with the mark (C).

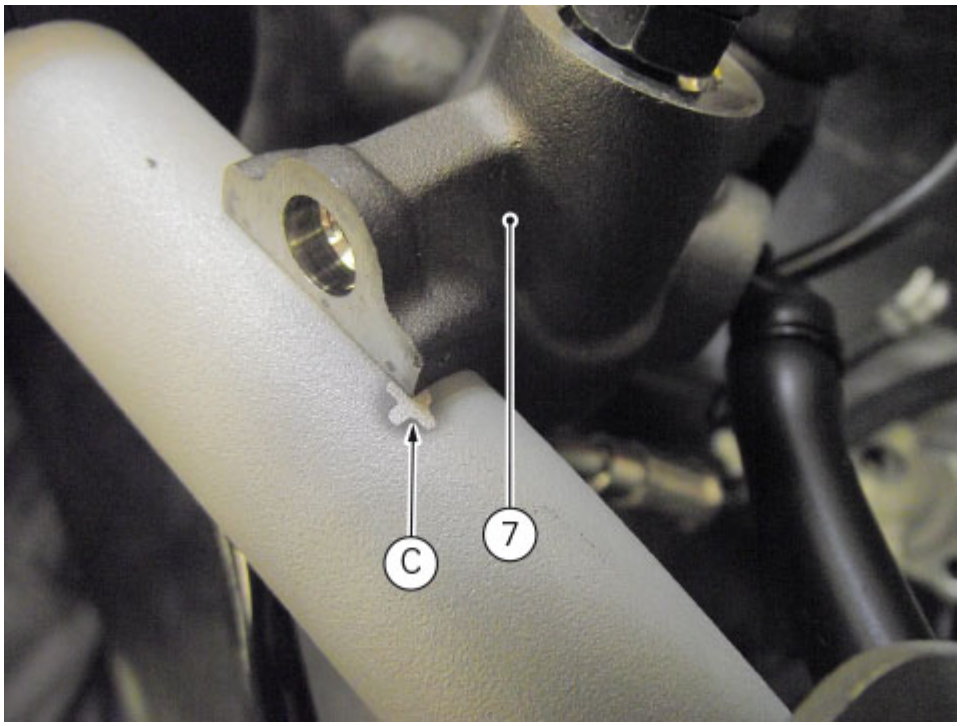

Position clamp (13) on the handlebar and start the screws (12).
Tighten the fastening screws (12) to the specified torque of 10Nm±10% following the sequence 1-2-1 starting from the upper screw.

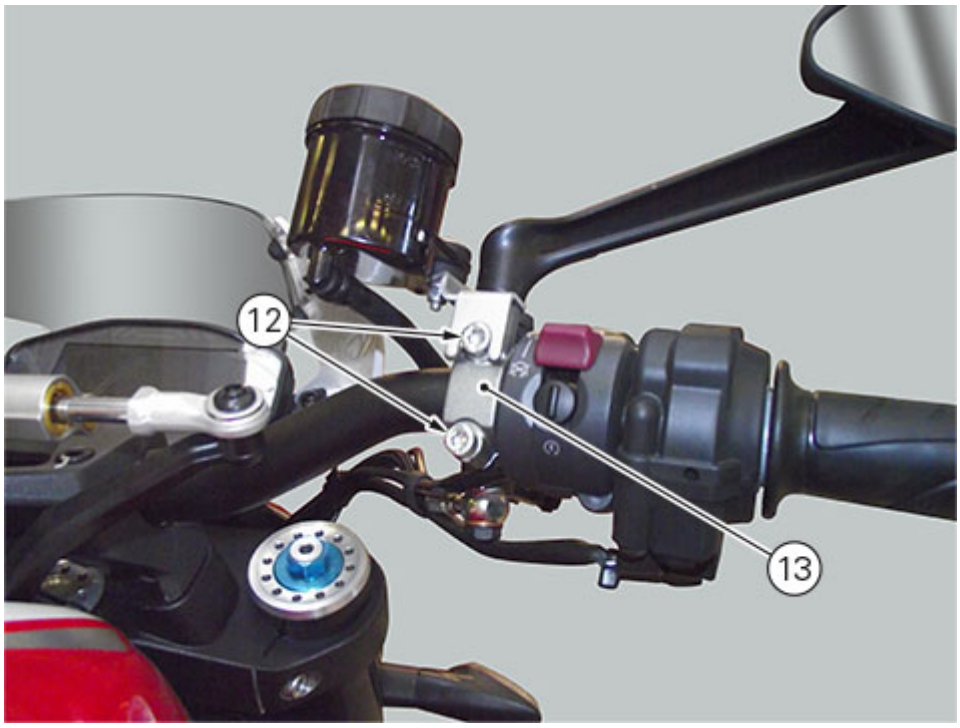

Fit the brake system fluid reservoir (3) and refit right rear-view mirror (Refitting the rear-view mirrors).
Fit hose (2) and secure it to brake lever with clamp (1).



Position the hose (6) and sealing washers (5) on the master cylinder unit and secure with the special screw (4), without tightening.

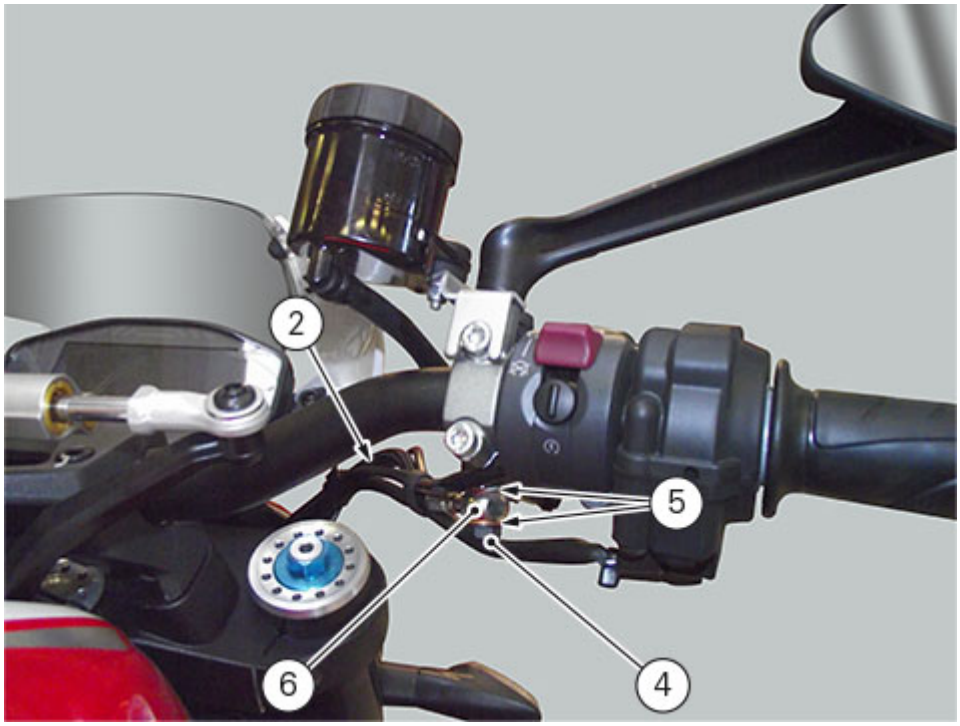

Warning
An incorrectly positioned hose can cause system faults and interfere with moving parts.

Aim hose (6) as shown in the figure and then tighten the special screw (4) to a torque of 23Nm±10%.

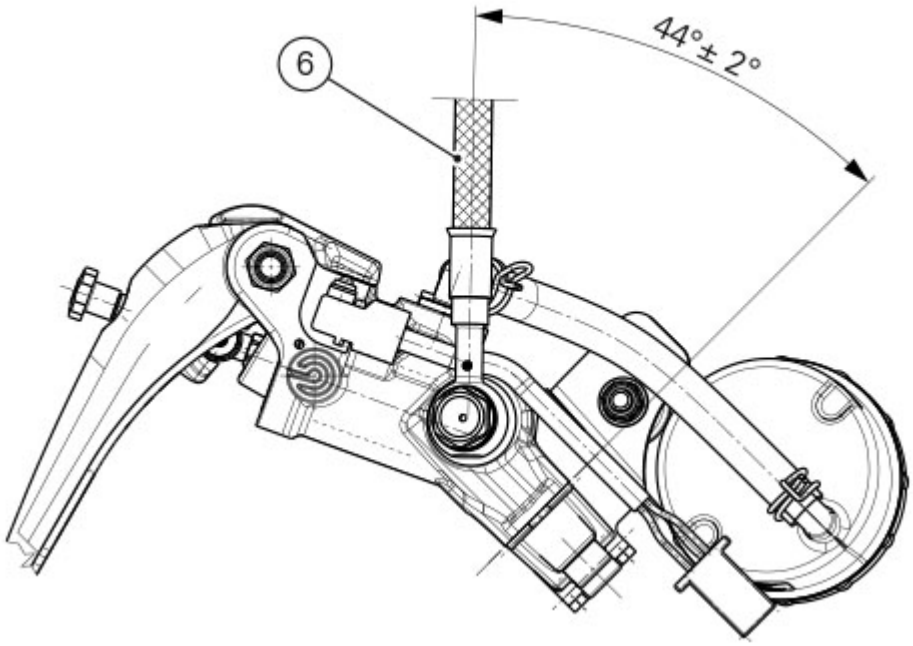

For the positioning of the hose (6) and retaining ties as well as of removed cables and wirings, see Section "Routing wiring/hoses".

Connect micro-metric sensor connector (8) of front brake (10).
Connect connector (9) of the RH switch (11).

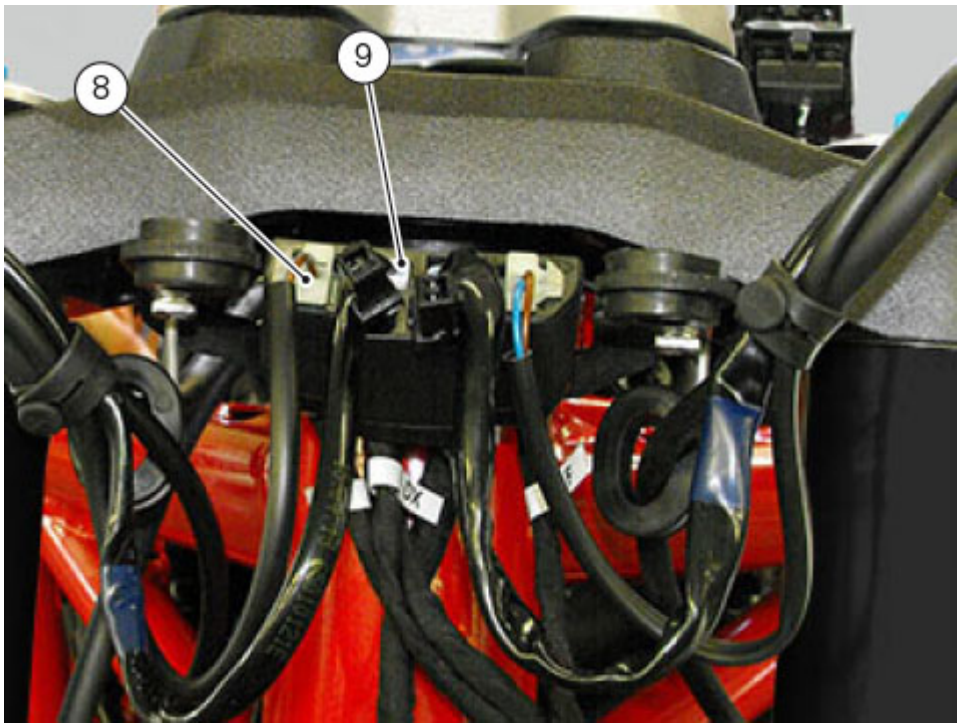

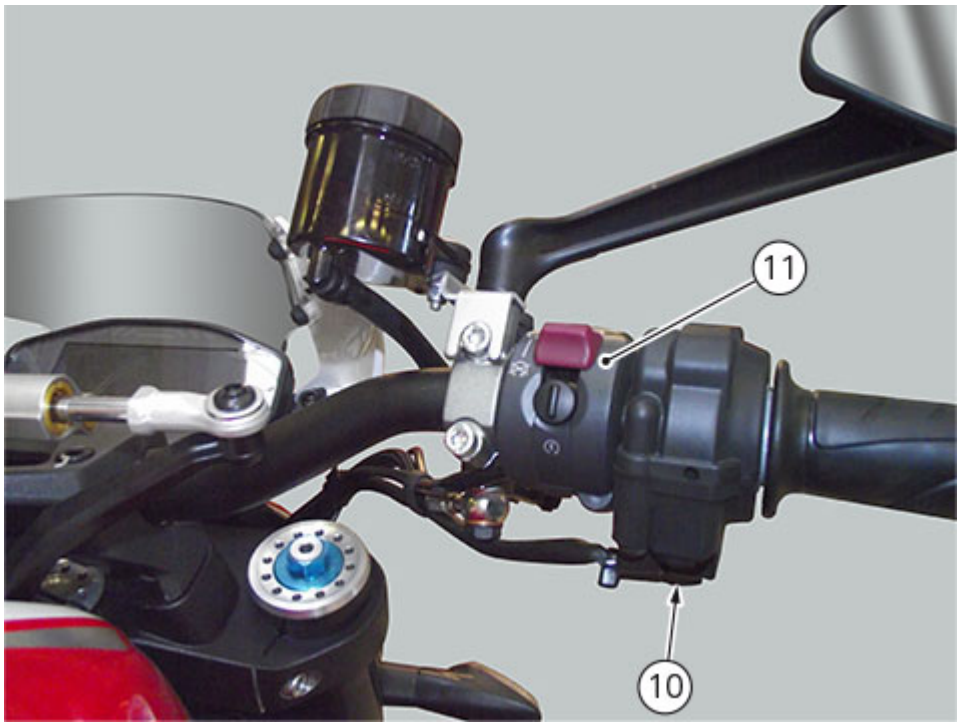

Secure wirings in place with three ties (7).

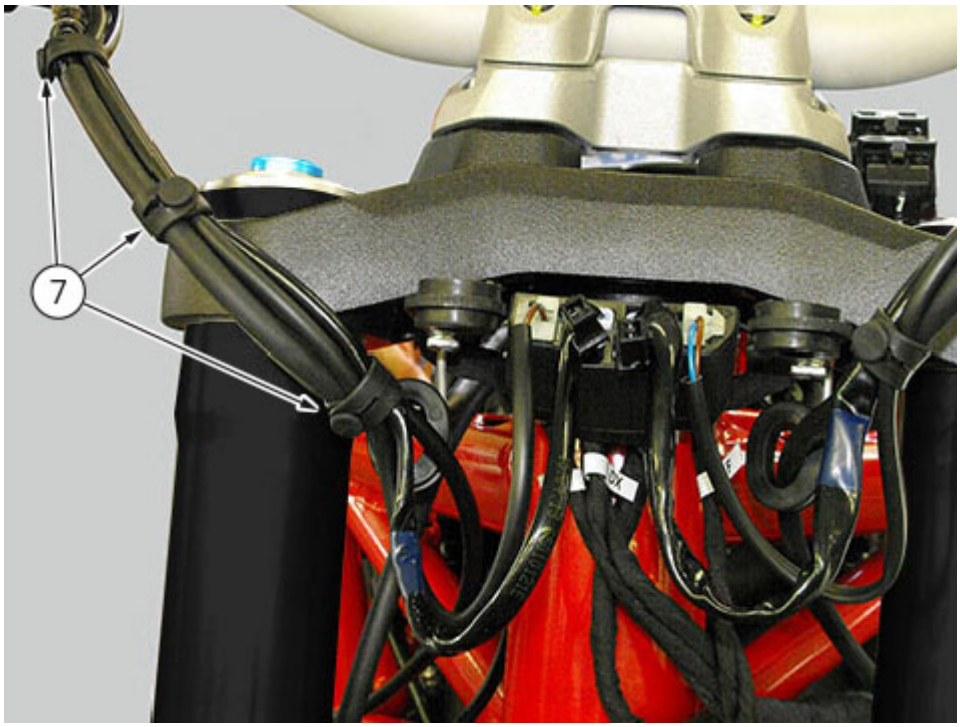

Refit the light assembly (Refitting the light assembly).
Fill the front brake system (Changing the front brake system fluid).

Removing the front brake master cylinder

Warning
The following procedure refers to one version of the vehicle, but applies to both of them.

Warning
The brake master cylinder manufacturer advises against servicing the brake master cylinder due to the safety critical nature of this component. Incorrect overhaul can endanger rider and passenger safety. Maintenance operations on these units are limited to replacement of the following parts: control lever, fluid reservoir assembly and relative fasteners and master cylinder fasteners.

Remove the light assembly (Removing the light assembly).
Drain the front brake system (Changing the front brake system fluid).
Remove the RH rear-view mirror (Removing the rear-view mirrors).

Slide out tie (1) and remove pipe (2).
Remove the coolant reservoir assembly (3).



For the front ABS brake system, please also refer to sections "ABS system operation information" and following chapters.

Undo the special screw (4), collecting the sealing washers (5) to release the front brake master cylinder unit from hose (6), taking special care to wirings (A).

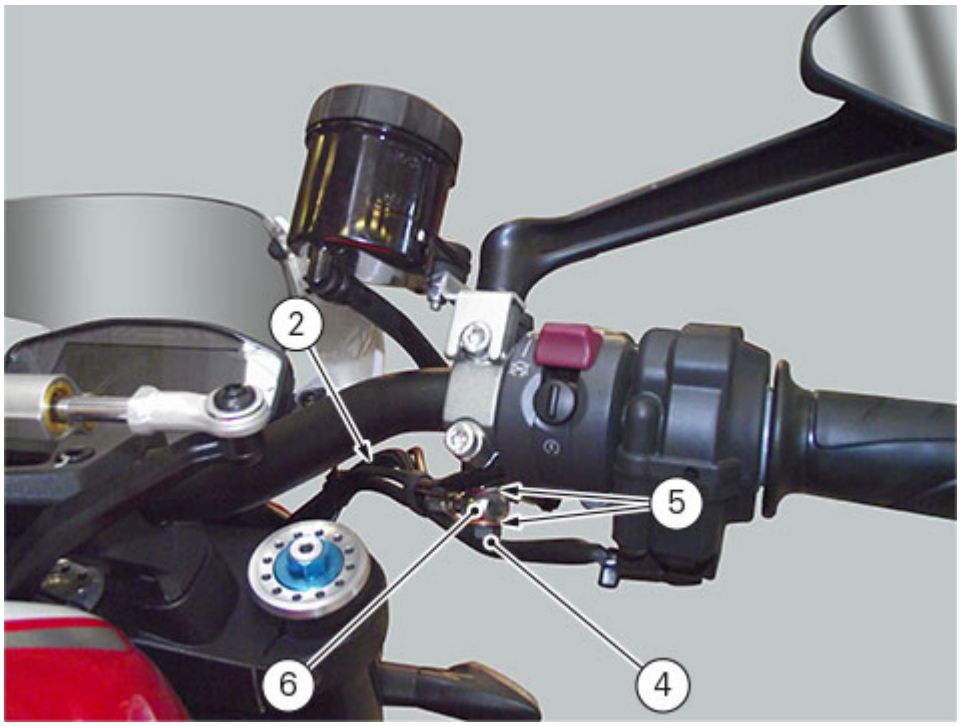

Remove the three ties (7).

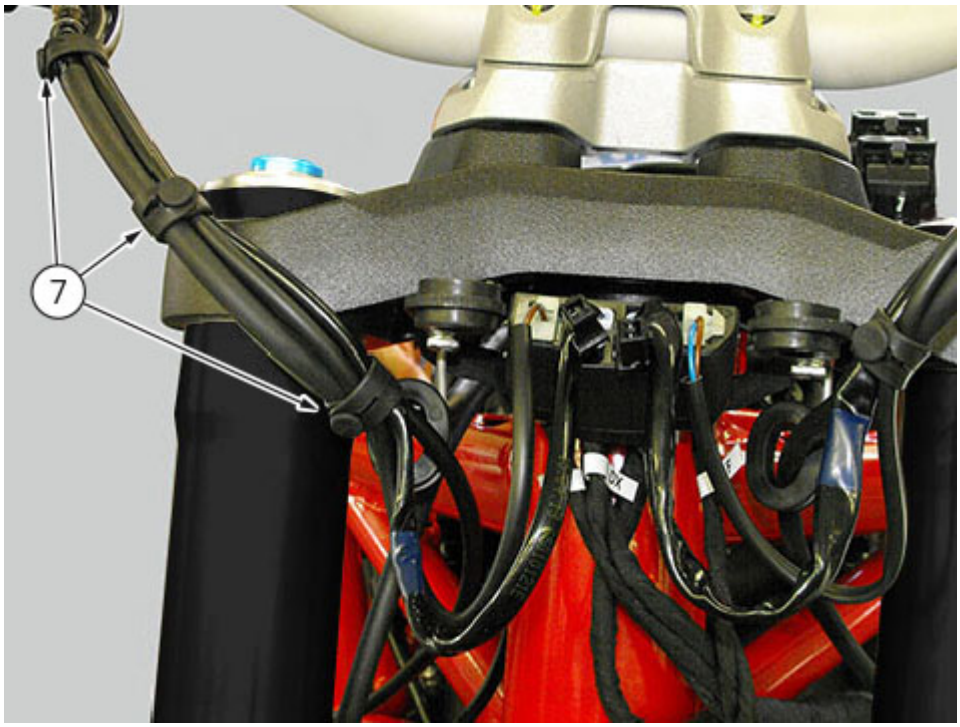

Disconnect connectors (8) and (9) from front brake micro-metric sensor (10) and right-hand switch (11).

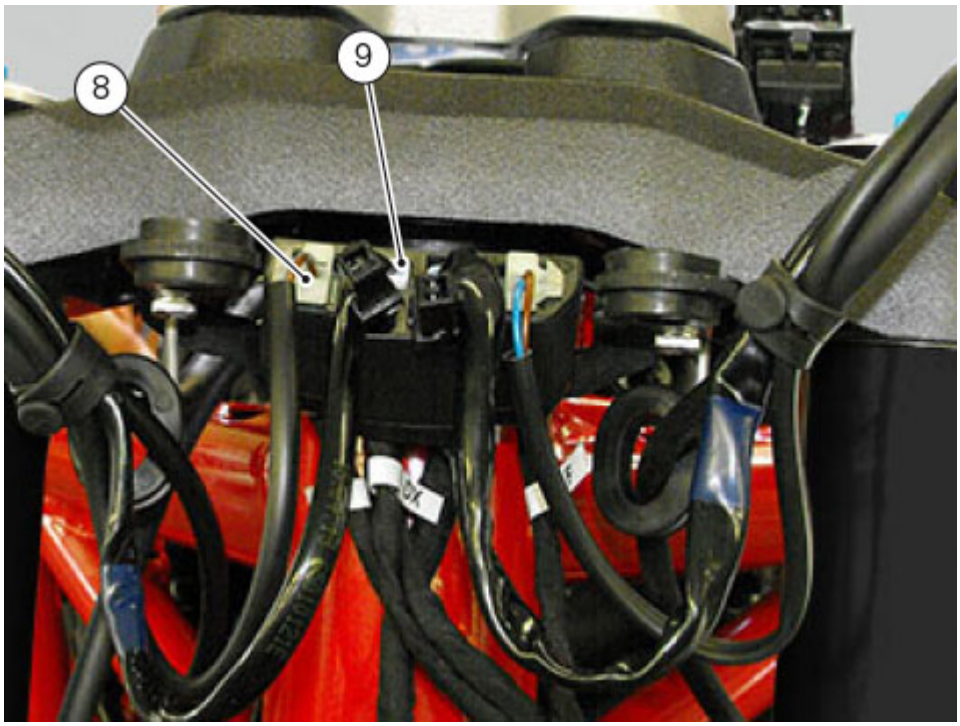

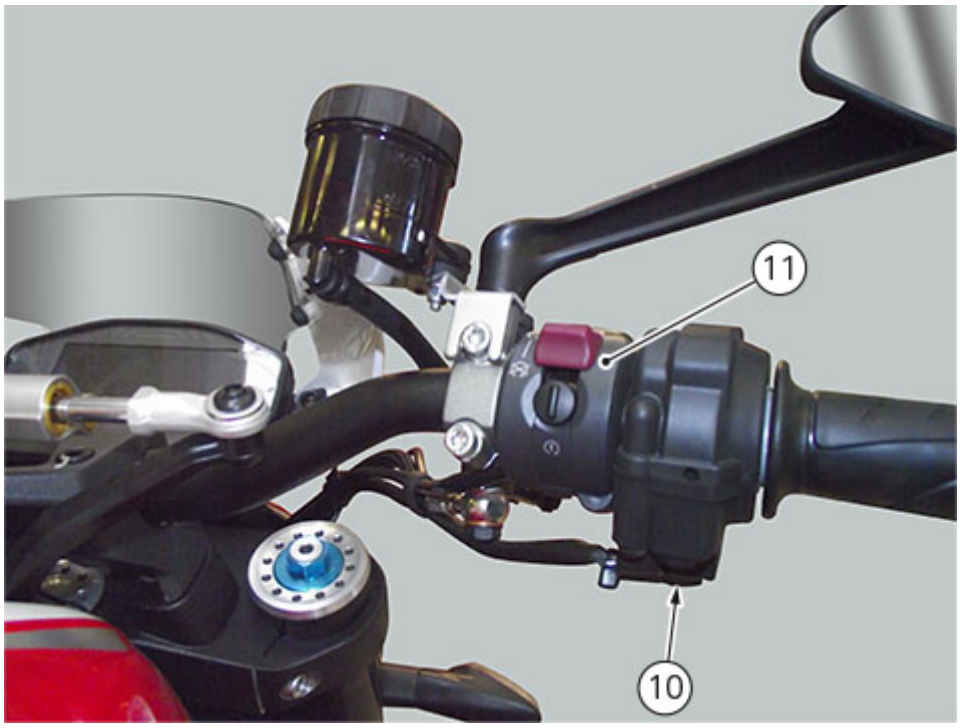

Undo the screws (12) securing the clamp (13), and then remove the front brake master cylinder assembly from the handlebar.

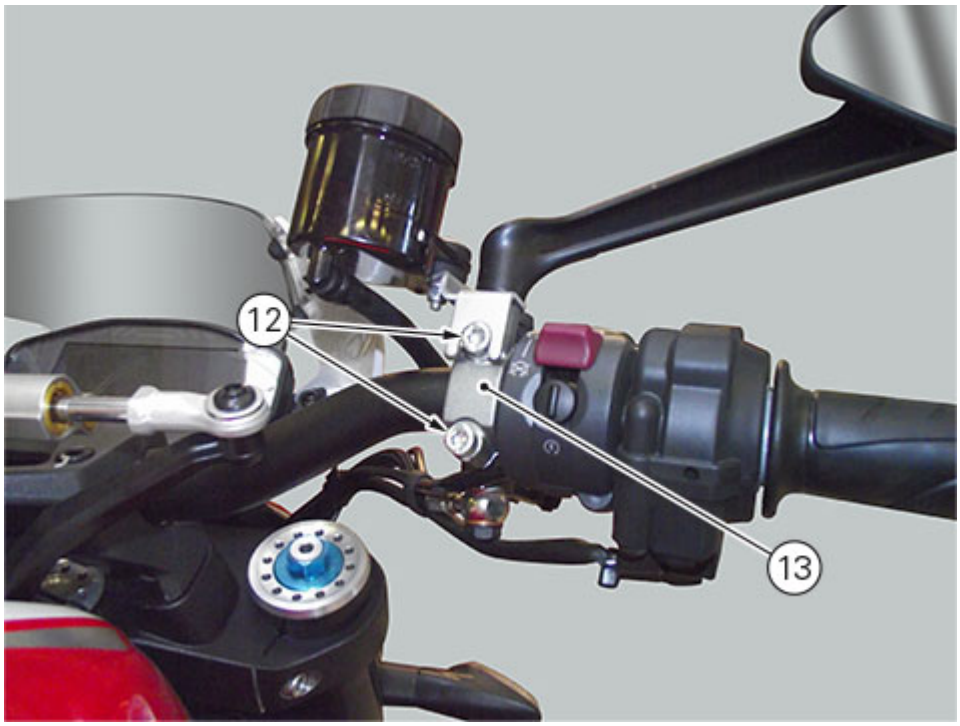
12
13

Refitting the rear brake calliper

If the brake lines (2) are replaced or if one of the rear brake system components has been removed, make sure that the hose unions on the master cylinder and the calliper are correctly positioned.

Warning

If incorrectly positioned, hoses can affect brake operation and foul moving parts. Position the component as shown in the figure.

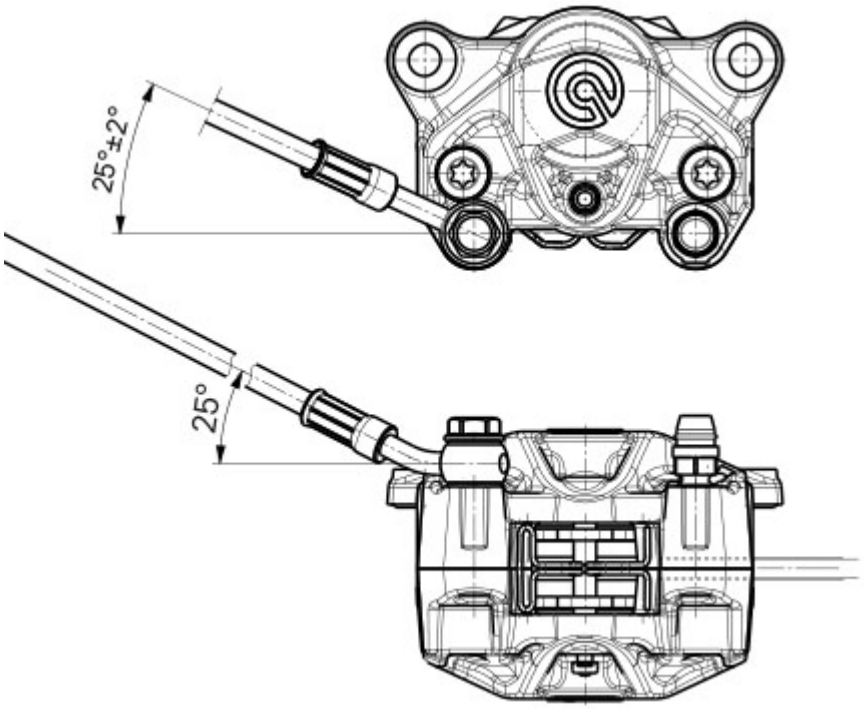

Remember to fit the copper gaskets (3) to the hose end union when reconnecting the brake line to the brake calliper (5).
After having aimed the hose union, tighten special screw (1) to a torque of 23Nm±10%.
If the speed sensor (6) is removed, fit it to the calliper holder plate (A) with the spacer (8), and tighten the screw (7) to a torque of 10Nm±10%.

Note

The gap between sensor and the brake disc retaining screw must be within 0.6 and 2.2 mm.

Insert the rear brake calliper (5) on the brake disc, aligning it with the holes of the calliper mounting bracket.
Apply the specified product on screws (4) and tighten them to a torque of 25Nm±5%.

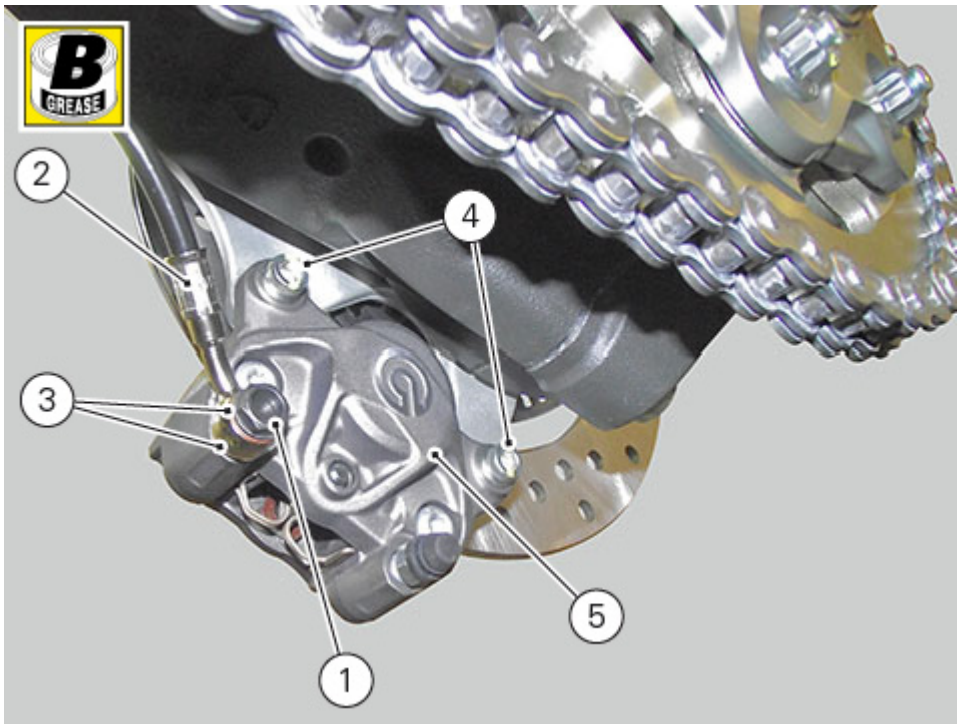

Check and adjust phonic wheel sensor air-gap (Adjusting the phonic wheel sensor Air-Gap).

Removing the rear brake disc

Removing the brake disc
Remove the rear eccentric hub (Removing the rear wheel eccentric hub and the rear wheel shaft).

Undo and remove the four screws (1) securing the brake disc to the wheel shaft, and remove the rear brake disc (2).
Loosen the screws (3), and remove the rear phonic wheel (4).

Checking the brake disc
The brake disc must be perfectly clean, with no rust, oil, grease or other dirt and no deep scoring.
To check the wear limit of the brake disc, refer to chapter "**Technical data**".

Refitting the brake disc
Position rear brake disc (5) on rear wheel shaft (P), aiming it with chamfered sides (A) facing upwards.
Fasten the disc by starting screws (1) after applying recommended threadlocker.

Note
Pay attention to align screw heads to the corresponding seats on brake disc.

Tighten screws (1) to a torque of 25Nm±10% following a 1-2-3-4 sequence, after having applied the indicated product.
Position the phonic wheel (4) on brake disc (5), aiming it as shown in the figure.
Fasten phonic wheel (4) starting screws (3) after applying recommended threadlocker.
Tighten the screws (3) to a torque of 5Nm±10%, in a cross pattern.
Remove the rear eccentric hub as described in section "Removing the rear wheel eccentric hub and the rear wheel shaft".

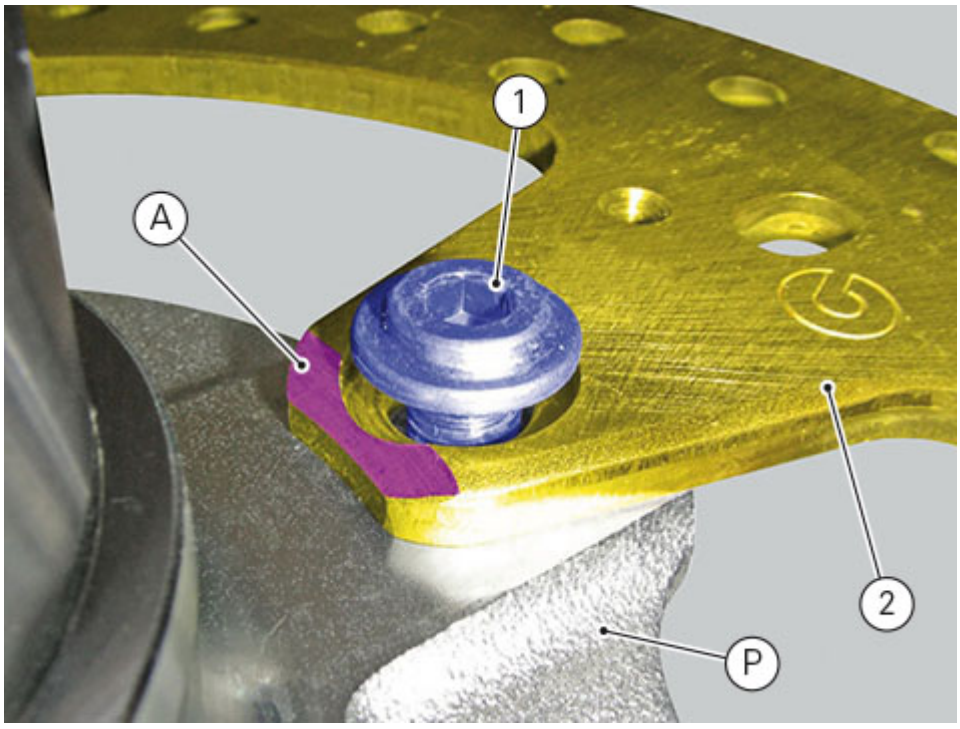

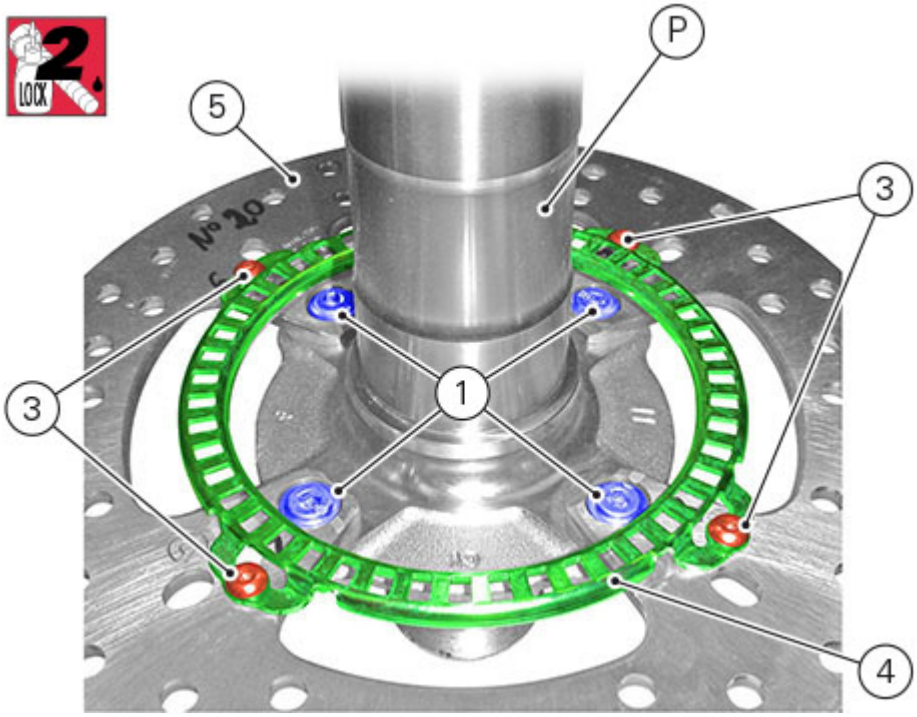
LOCK
2.
P
5
3
3
1
4

Removing the rear brake calliper

Drain the rear braking system (Changing the rear brake system fluid).
For the ABS brake system, please also refer to chapters "ABS system operation information" and to chapters "**System components**" and "**ABS component maintenance**".

Undo and remove the special screw (1) securing the hose (2) to the rear brake calliper and the corresponding seals (3).
Remove the hose (2).

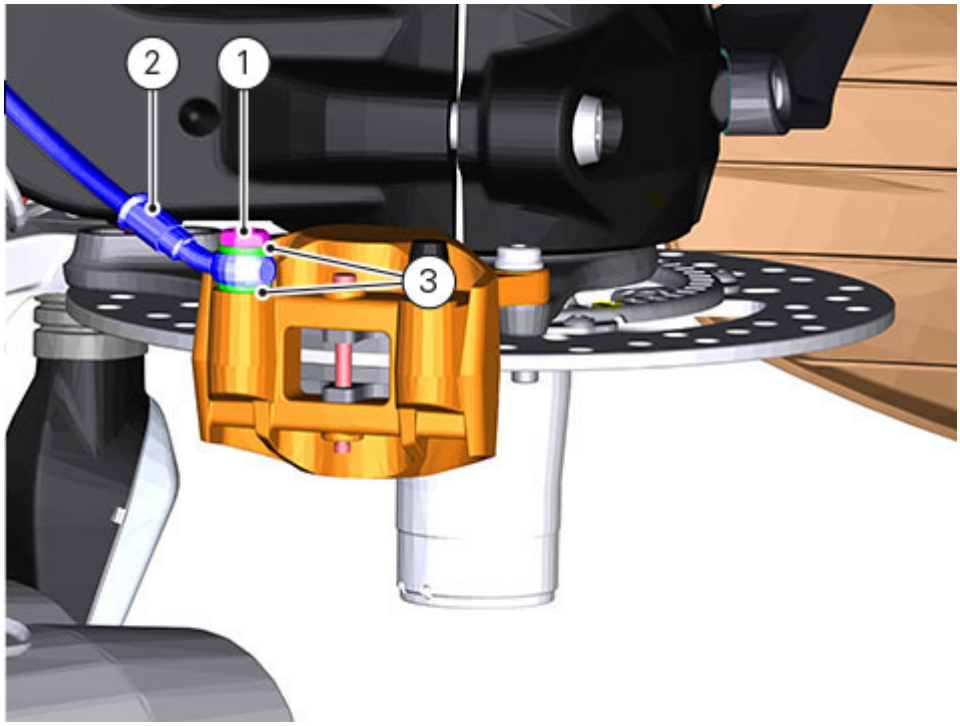

Undo the two fastening screws (4) securing the rear brake calliper (5) to the calliper holder bracket, and remove the brake calliper (5).
If it is necessary to remove the calliper holder plate (A), refer to section "Removing the rear wheel eccentric hub and the rear wheel shaft".
To replace the brake pads follow instructions in the paragraph "Checking brake pad wear and replacing rear brake pads".

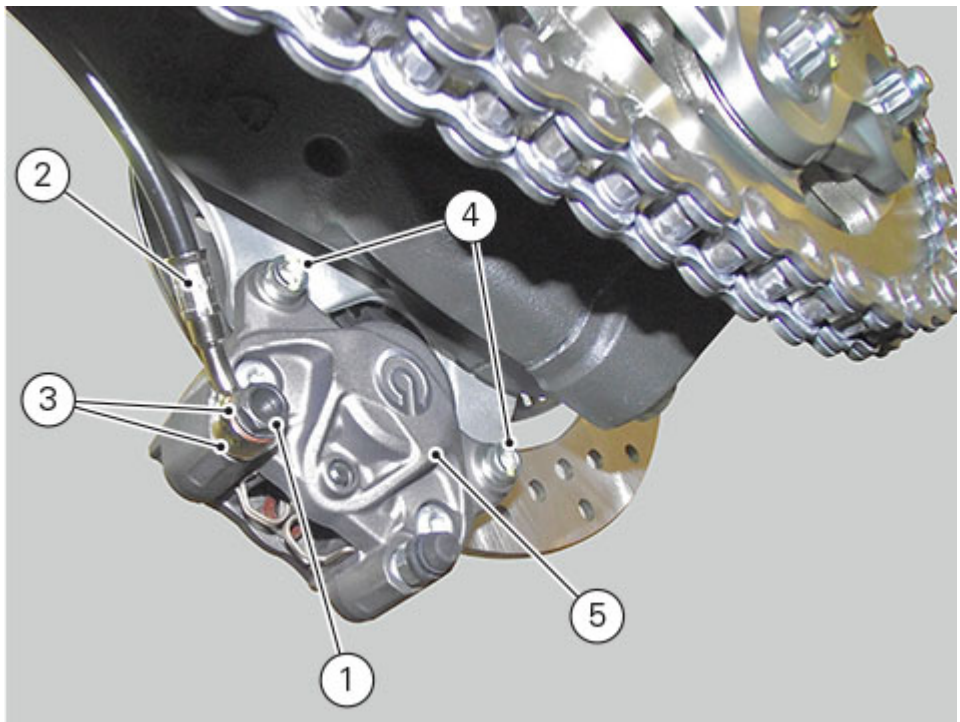

To remove the speed sensor (6), undo the fastening screw (7) paying attention to the spacer defining the air-gap (8).

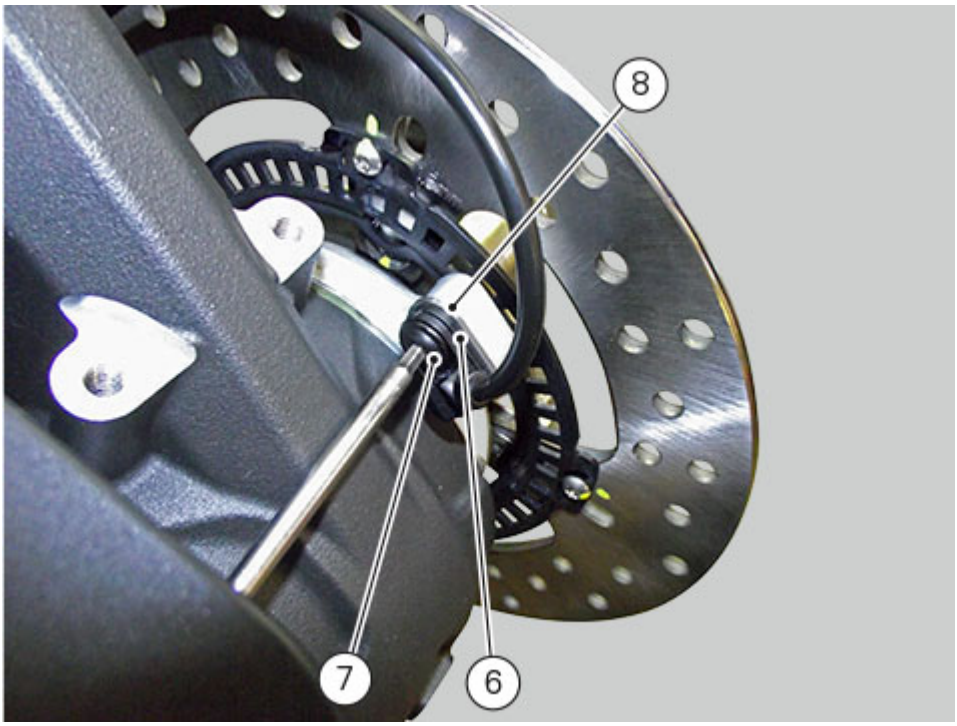
8
7
6

Refitting the rear brake control

Apply special grease on the inner surface of the bush (9) and threadlocker on the shaft (5).
Fit O-ring (10) on shaft (5).
Insert shaft (5) on brake control lever (6), fit the other O-ring (10) and washer (8).

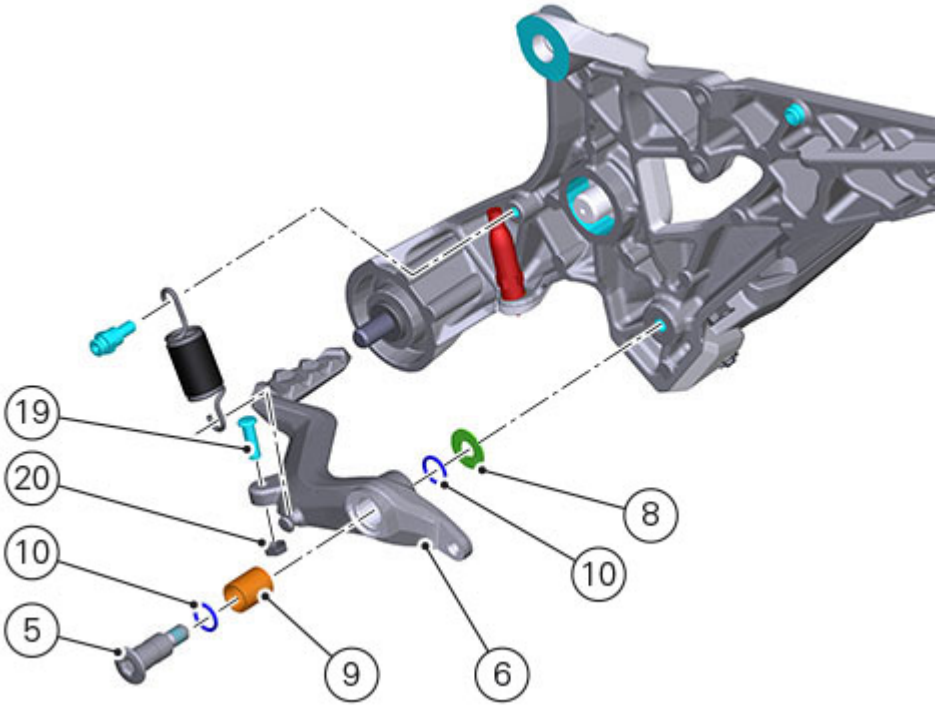

Reconnect hose (13), locating seals (14) on both sides of the hose union, and secure it with the special screw (11).
Tighten special screw (11) to a torque of 23Nm ±10% after having applied the specified product.

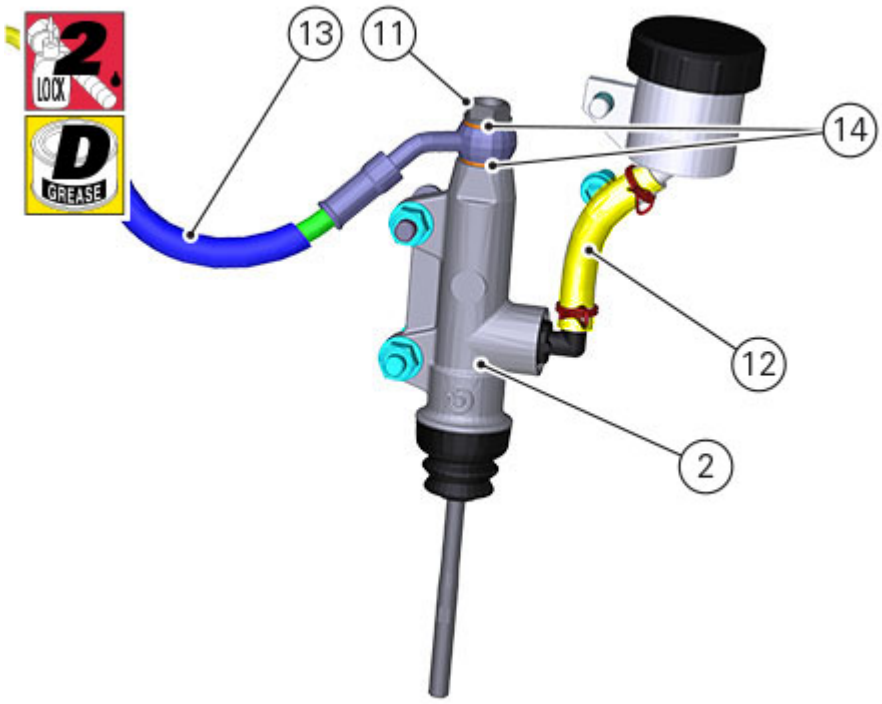

Make sure that hoses (12) and (13) are duly positioned and not twisted.

Note
Pay particular attention to the hose routing and hose coupling on the rear brake master cylinder

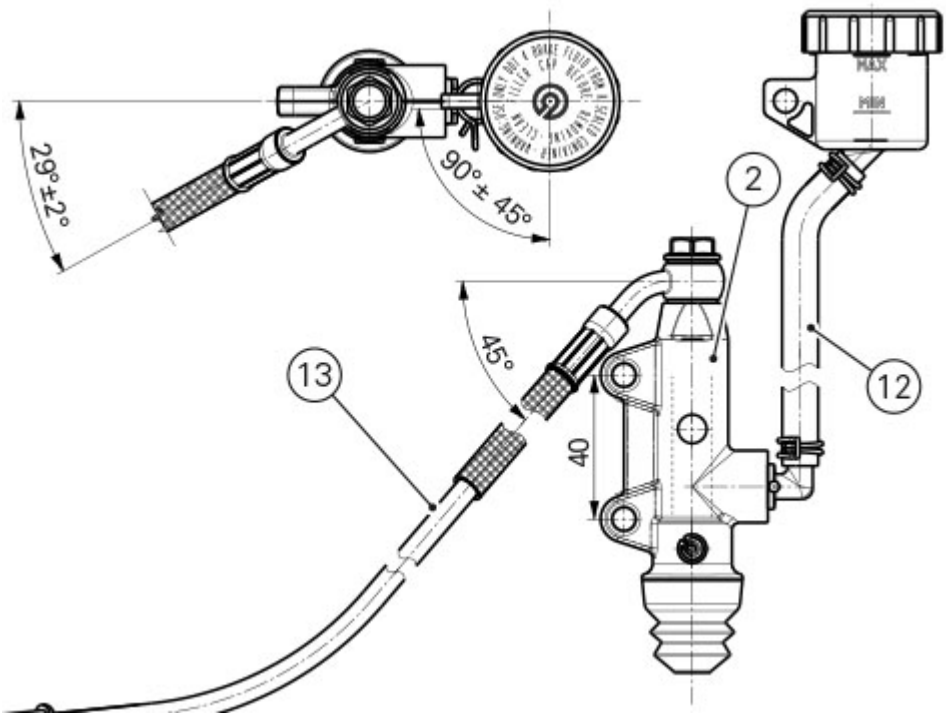

If previously removed, refit washers (21) and tighten rear brake sensor to a torque of 5Nm ± 10% on plate.

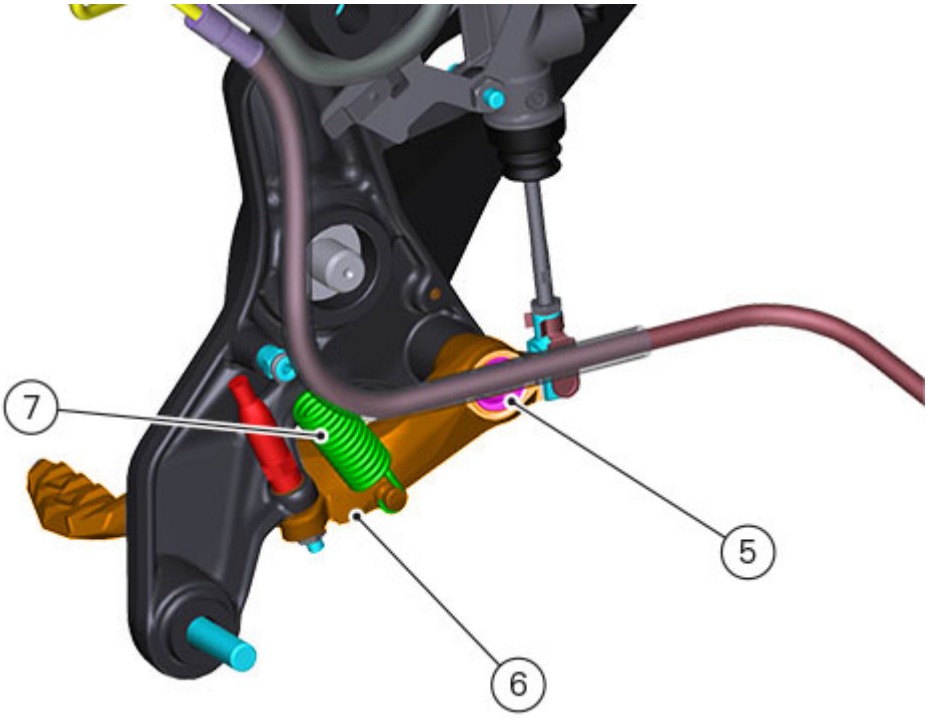

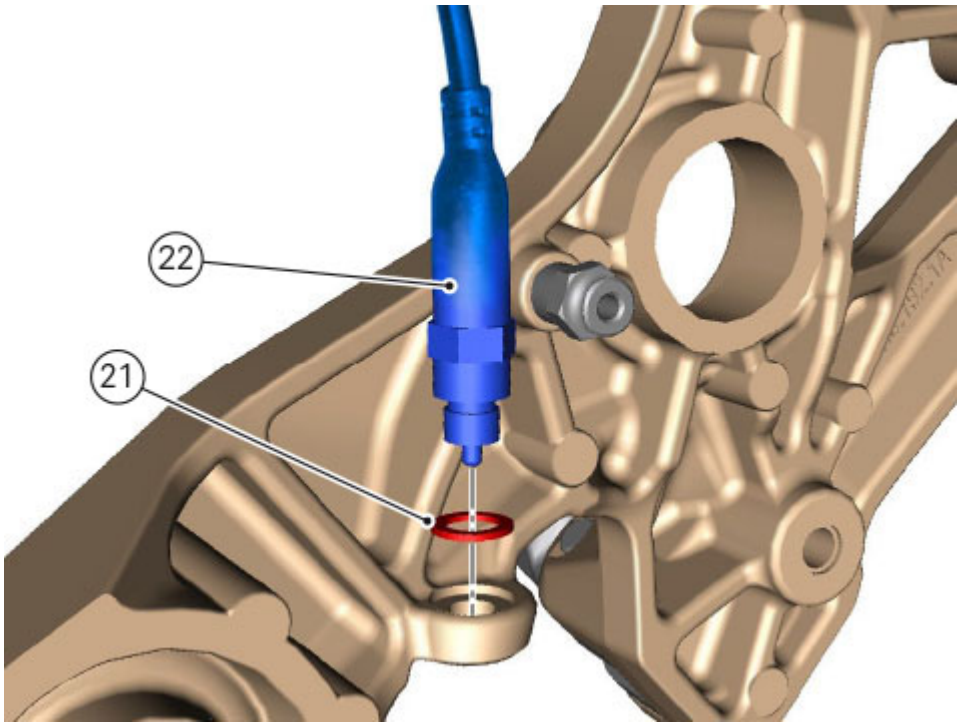

Apply the recommended threadlocker on shaft (5).
Fit brake lever (6) with spring (7) starting shaft (5).
Tighten shaft (5) to a torque of 24Nm ±10% after having applied the specified product.

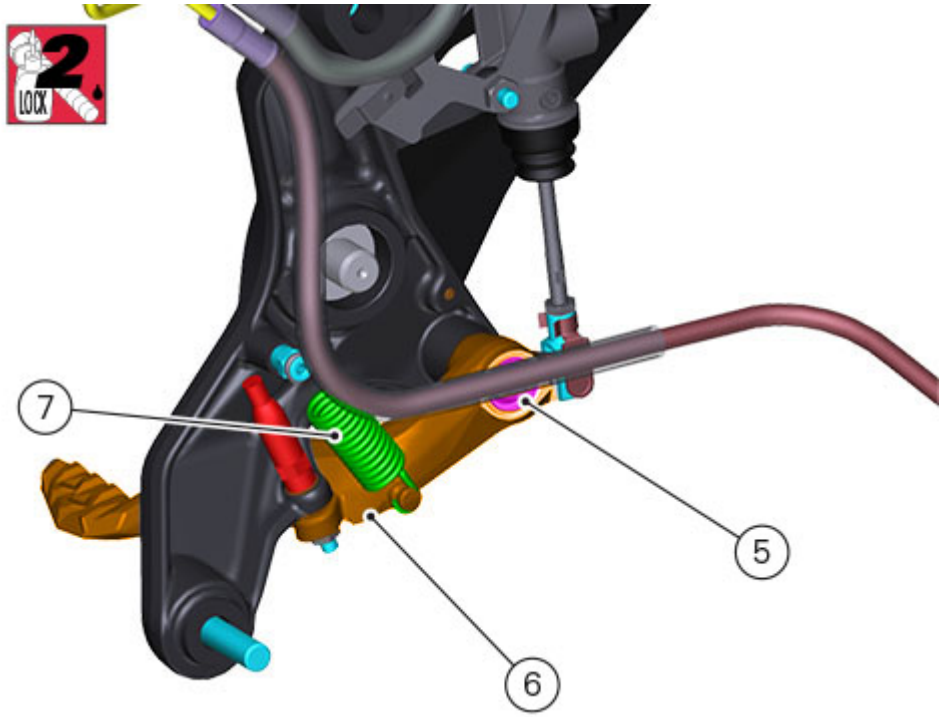

Apply the recommended threadlocker on the screws (1).
Fit rear brake master cylinder (2) and stop sensor connector support bracket (16) on vehicle, starting retaining screws (1) inside nuts (15).
Insert the rod (3) inside the master cylinder (2), after applying the recommended grease.
Tighten screws (1) to a torque of 10Nm ± 10%.

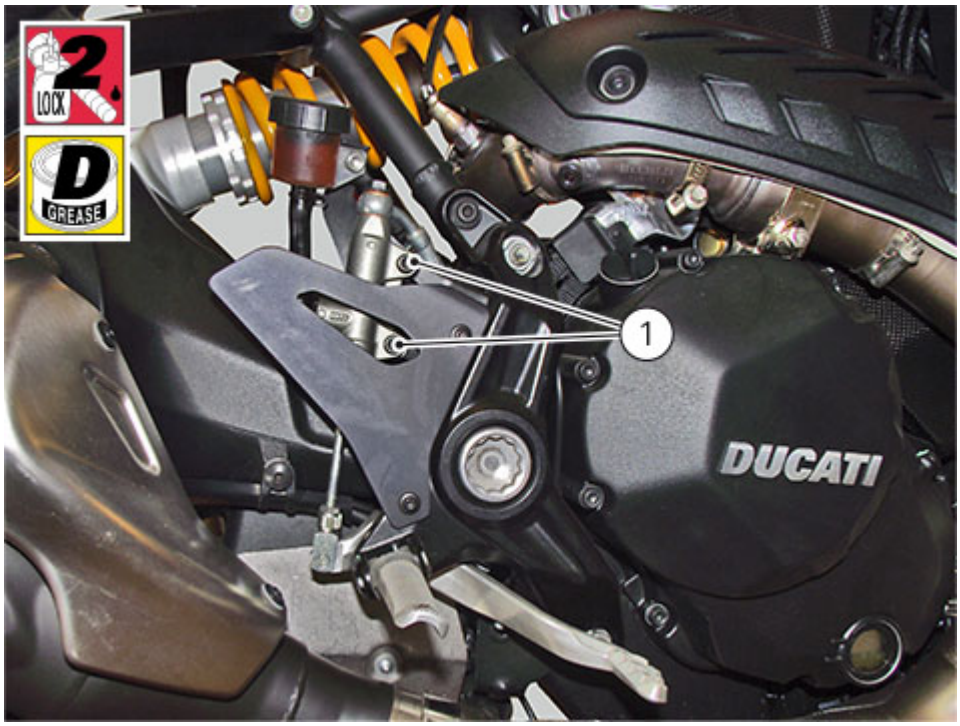

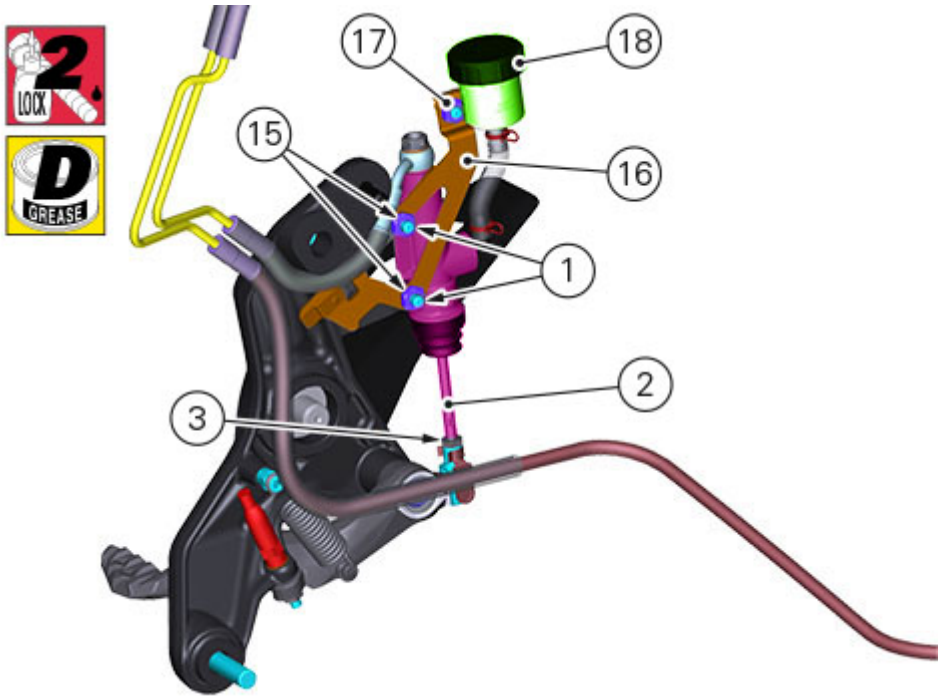

Connect rear stop switch (A) to main wiring.

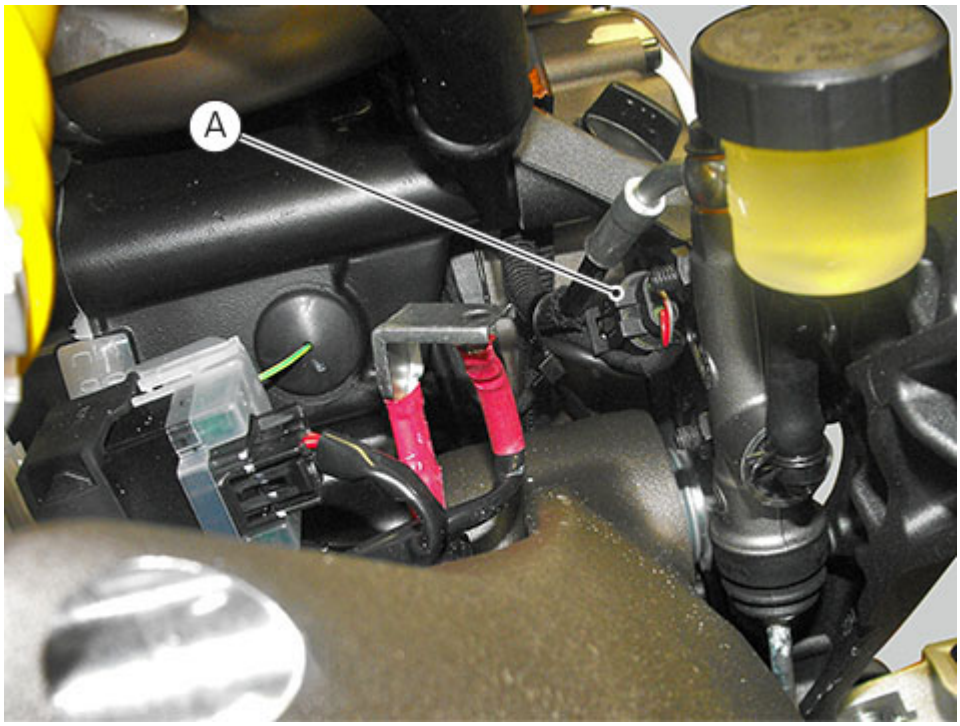

Fill the rear braking system (Changing the rear brake system fluid).

Disassembling the rear brake control

The brake master cylinder is supplied only as a complete unit; internal components cannot be replaced.
To disassemble the master cylinder's outer parts, follow the indications given in the exploded view at the beginning of this Section.
If the bush (9) inside the brake pedal (5) needs to be replaced, grease the external surface and fit the new bush using a press to insert it. The bush must be placed at 2 mm from the pedal external face.

To disassemble the various parts of the system, refer to the exploded view at the beginning of this chapter.

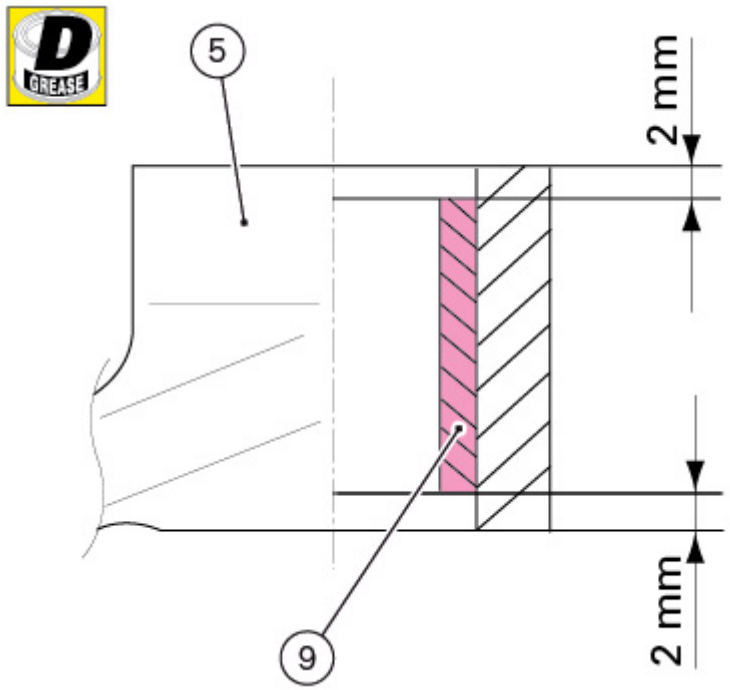

After performing an operation on the rear brake control, check the brake pedal position following the instructions detailed in chapter "Adjusting the position of the gear pedal and rear brake pedal".

Removing the rear brake control

Warning

The brake master cylinder manufacturer advises against servicing the brake master cylinder due to the safety critical nature of this component. Incorrect overhaul can endanger rider and passenger safety. Maintenance operations on these units are limited to replacement of the following parts: control lever, fluid reservoir assembly and relative fasteners and master cylinder fasteners.

Drain the rear braking system (Changing the rear brake system fluid).
Remove the RH footpeg holder plate (Removing the footpeg holder plate).

For the front ABS brake system, please also refer to Sections "ABS system operation information" and chapters "**ABS system components**" and "**ABS component maintenance**".

Loosen special screw (11).

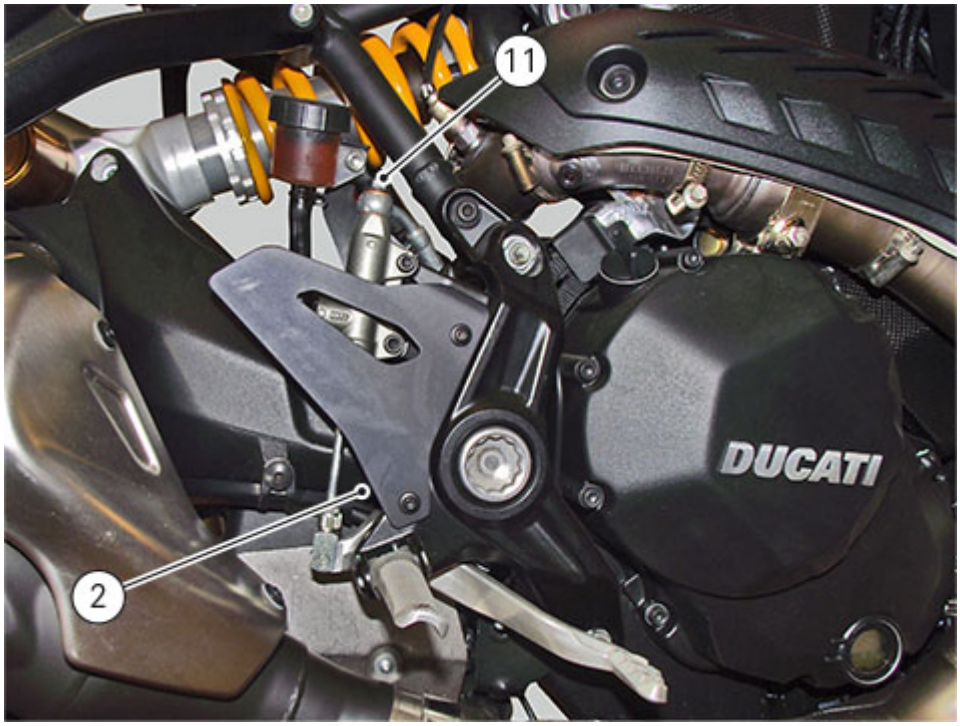

Disconnect rear stop switch (A) from main wiring.

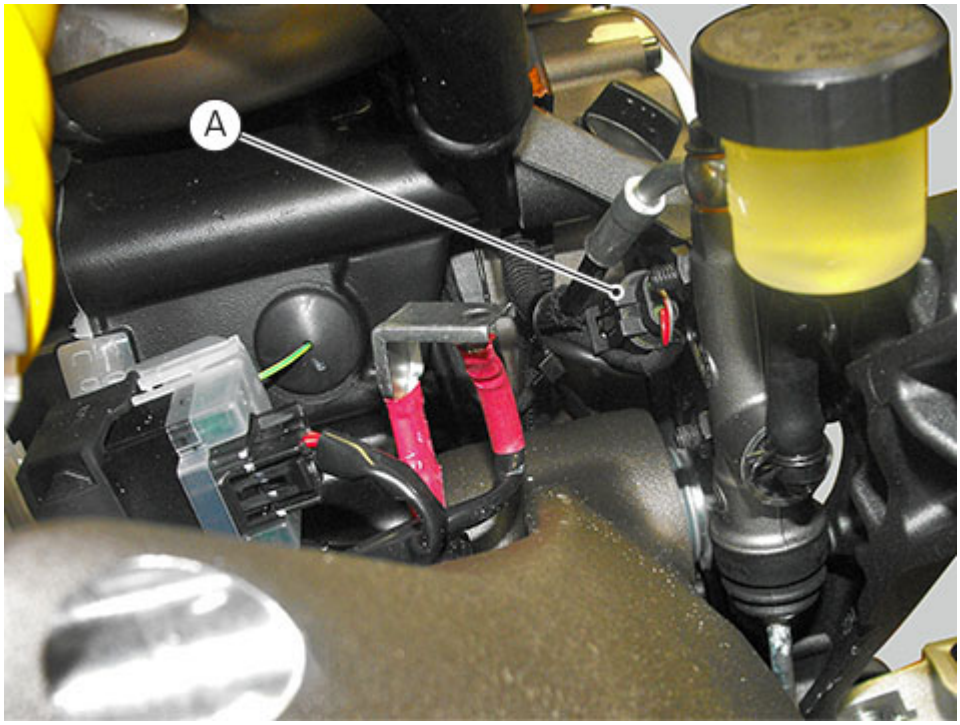

Working on the external side, loosen rear brake master cylinder (2) fastening screws (1) and collect nuts (15) and stop connector support (16) on the inner side.
Loosen nut (17).
Slide out rear brake master cylinder (2) with reservoir (18), by loosening adjuster nut (3).

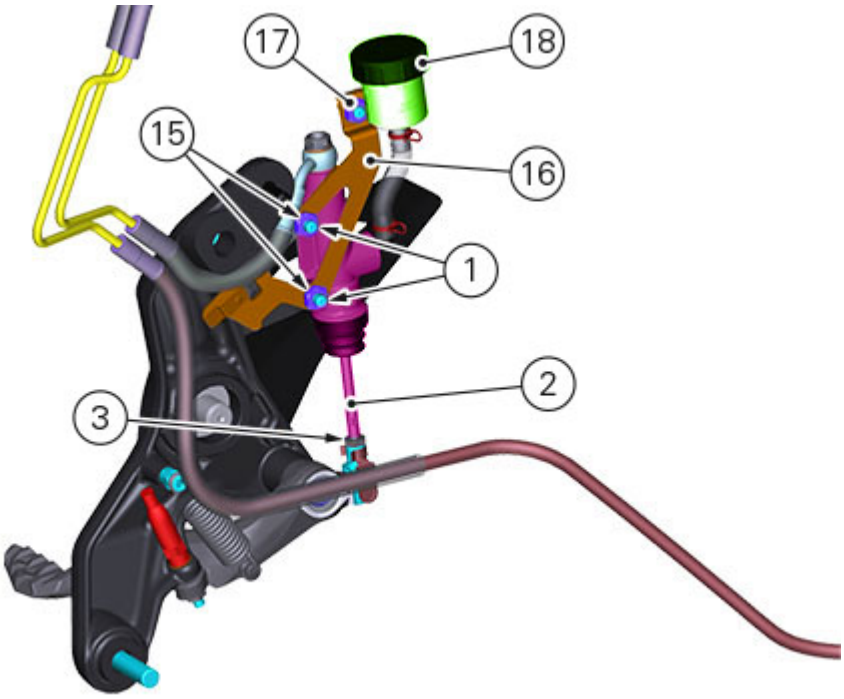

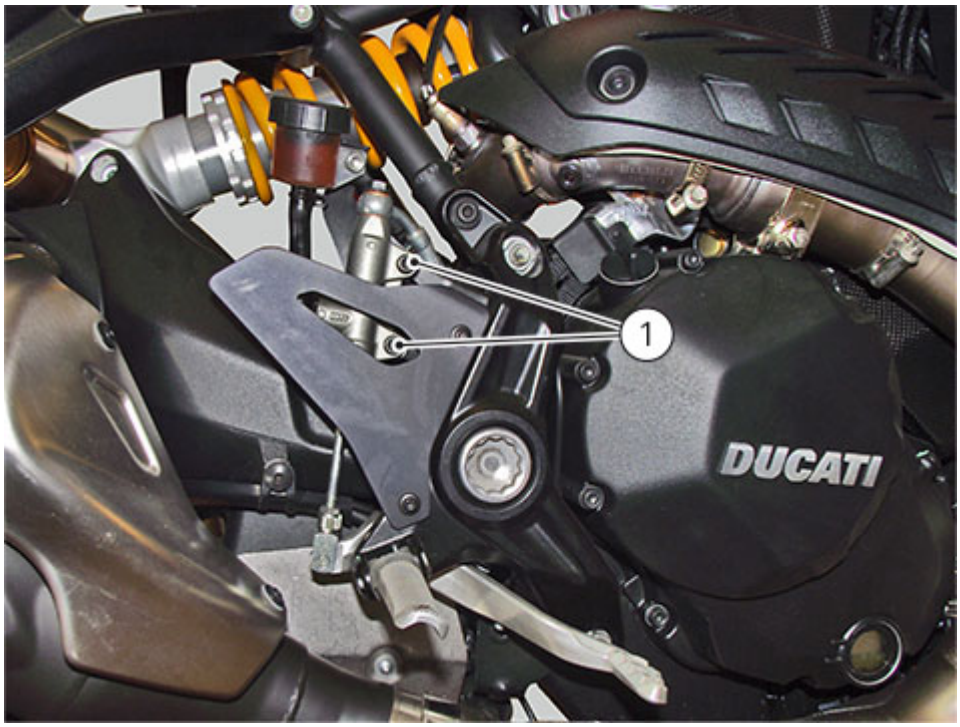

Undo pin (5) securing the brake lever (6), collecting spring (7).

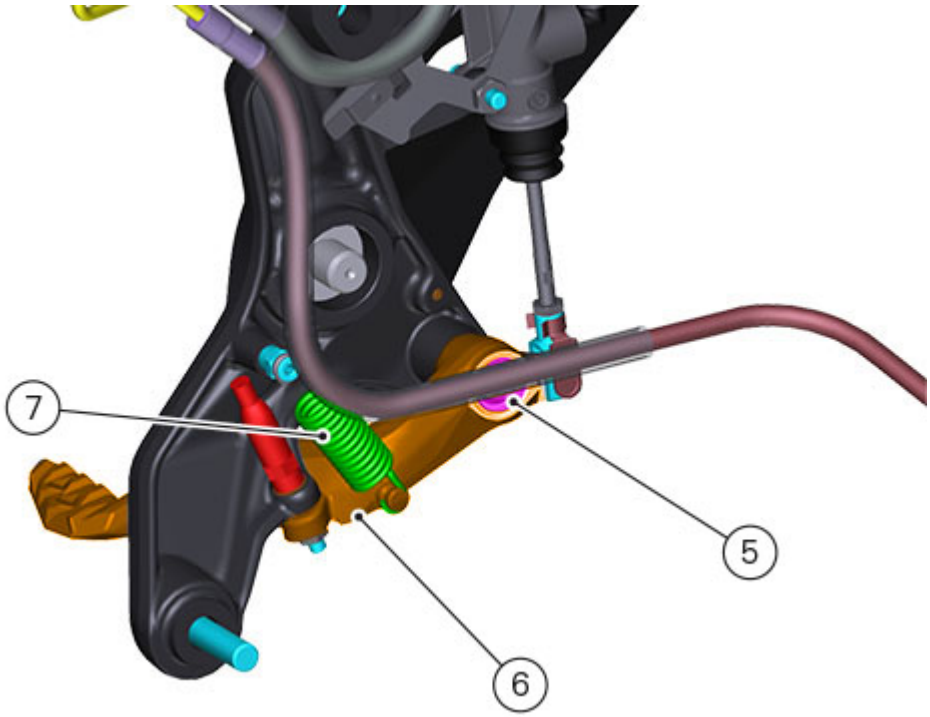

Slide out the brake lever (6) and collect pin (5), washer (8), bushing (9) and O-ring (10).

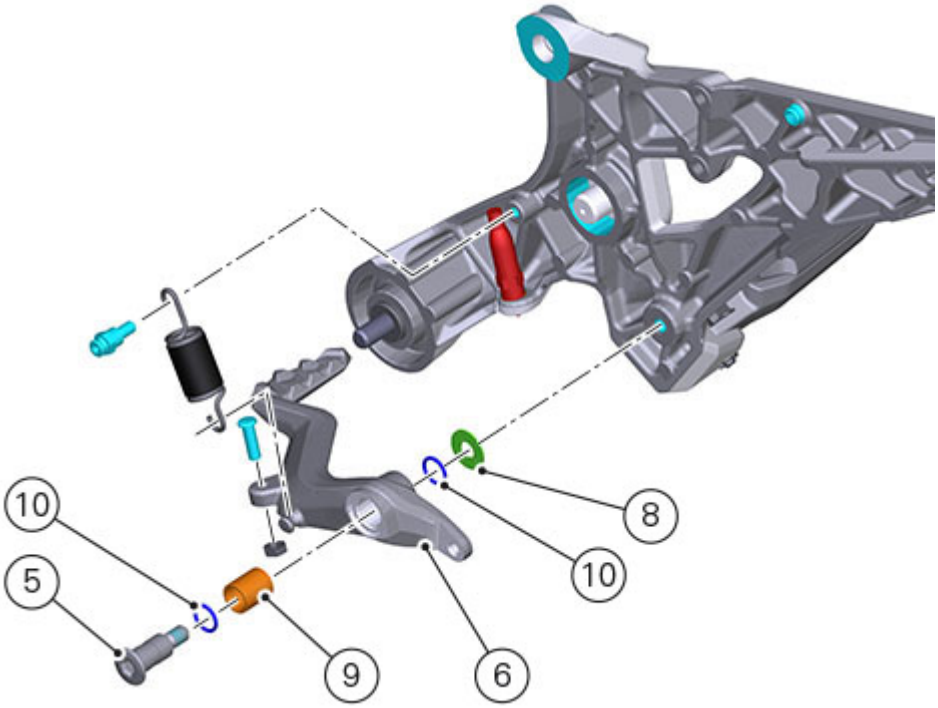

Undo the special screw (11) from master cylinder (2) by removing the hose clip (12); slide out hose (13), collecting the seals (14).
Remove rear brake master cylinder (2) from vehicle.

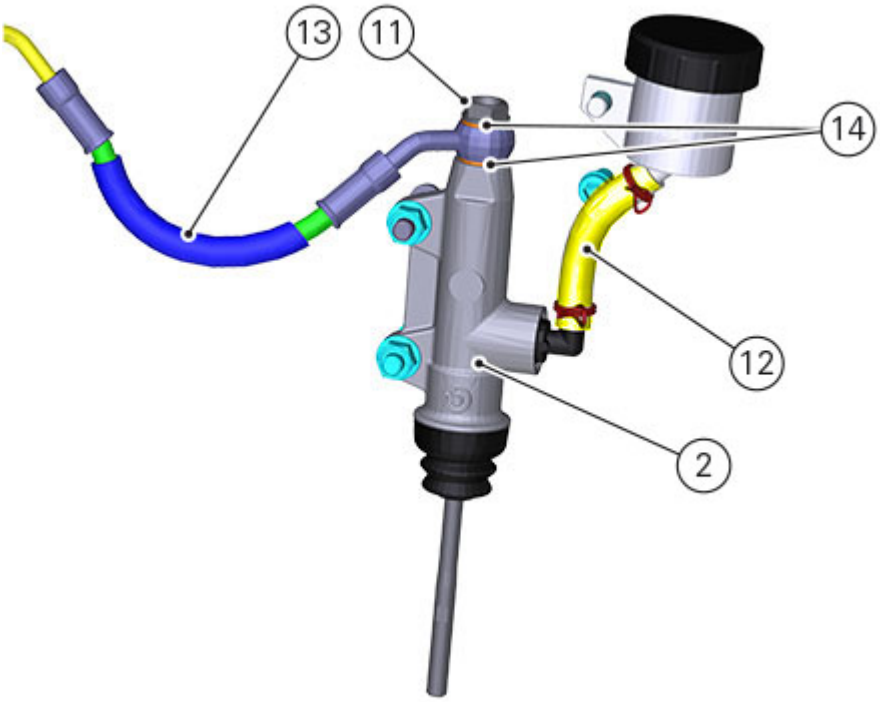
13
11
14
12
2

ABS system deactivation

ABS (Antilock Braking System) intervention can be customised and possibly disabled. To set and disable ABS, refer to "Settings and displaying".

Warning

If the vehicle front wheel remains off the ground for a prolonged period while the vehicle is moving, the speed difference detected between the two wheels causes an ABS fault (warning light activated) and makes it impossible for the control unit to establish a reference speed.

ABS system operation information

The operation of the system is based on the analysis of the speed signals for front and rear wheels; the system is automatically deactivated if either of these signals is missing.

Note
In the event of the ABS control unit detecting a fault in the ABS electronic management system, it activates the specific fault warning indicator on the instrument panel and restores conventional braking functionality without ABS.
Hydraulic faults in the brake system and faults not directly related to the ABS system (e.g.: worn brake pads) cannot be detected by the ABS control unit.

Important
The operation of the system is based on the values read for the front and rear wheel speeds; take great care not to damage the phonic wheels and relative speed sensors when removing the wheels or when working close to these components; the phonic wheels damage may compromise the operation of the system and cause dangerous malfunctions.

ABS diagnosis

The diagnostic function of the ABS ascertains the functionality of the main system components via hardware/software tests, but cannot modify the operating parameters of the ABS strategy.
From the model menus of the DDS2.0 diagnosis software, select MONSTER family, then model 1200, and then select bike model year and press Global Scan button.
Now connect tester to bike CAN diagnostic socket, to locate connector refer to the video displayed in screen showing the diagnostic connector position on bike.
Wait for the correct configuration to be loaded and, when requested, switch the vehicle to key-on state.
Tester communicates to the different control units present on bike, ABS control unit included; wait for the scan to be completed.
Among the displayed information a "dot" icon is shown: based on its colour, it refers to validated errors inside the different control units.
In particular, if errors are stored, icon will be yellow or if errors are currently present, icon will be red, while if no errors are present, icon will be green.
To make a deeper analysis of the ABS control unit, select ABS control unit and SELF-DIAGNOSIS or, as an alternative, make a double selection on the same item with your mouse.
Once in this configuration, a number of parameters and states of the ABS control unit and information concerning the control unit itself may be selected and displayed.
The INFO menu allows reading the software version loaded on the control unit as well as other information.

Select the function "View parameters and states"

This function allows the tester to display the following ABS system parameters and states:

Viewable parameters

Front wheel speed	The speed value for the front wheel is displayed in Km/h.
Rear wheel speed	The speed value for the rear wheel is displayed in Km/h.
System voltage value	The system voltage value, measured across the terminals of the ABS unit, is displayed in Volts

Viewable states

Hydraulic pump motor state	Indicates if the electric motor of the hydraulic pump inside the ABS unit is functioning or not.
Valve relay state	Displays the state of the main valve relay inside the ABS unit.
Rear inlet valve state	Displays the state of the normally open EV1 rear inlet valve (OFF if open, ON if closed).

Front inlet valve state	Displays the state of the normally open EV4 rear inlet valve (OFF if open, ON if closed)
Front outlet valve state	Displays the state of the normally closed AV4 rear outlet valve (OFF if closed, ON if open).
Switch status ABS	Displays state of the analogue input of the ABS unit for the strategy switch off request (1 state to Uz, 0 state to GND).

Select the function "View errors"

This tester function provides the user with information concerning the error list in the ABS control unit memory, indicating if errors are stored or current. The following codes are given after a short description of the diagnosis type: MEM, indicating that the error has been stored previously by the ABS control unit but has not been detected in the current test session. ATT, indicating that the error is current and has been detected during the current test session.

 Note

While ATT indicates that the error has been found during the current test session, it does not necessarily indicate that the error is actually active at the time of indication. For example: disconnecting the front wheel speed sensor causes the code ATT to be displayed after the error description, but the code continues to be displayed even once the cause of its activation has been eliminated by reconnecting the sensor, as the ABS will only check sensor operation again after the next key-off/key-on cycle. As a result, always perform a key-on/key-off cycle after any work on the ABS system, interrupting and re-establishing communication between the diagnostic instrument and the ABS control unit before checking the updated ABS error list again.

The abbreviations for all the errors displayed are given as follows:

Error code	Errors	Description
C0032	Front Speed Sensor Error	Front speed sensor signal Open circuit/short circuit to GND/short circuit to Uz of front wheel speed sensor
C0031	Front speed sensor signal - Plausibility	Front speed sensor fault - Plausibility
C003E	Rear Speed Sensor Error	Rear speed sensor signal Open circuit/short circuit to GND/short circuit to Uz of rear wheel speed sensor
C003D	Rear speed sensor signal - Plausibility	Rear speed sensor fault - Plausibility
C1000	Plausibility of difference between front and rear wheel speeds	Front and rear wheel speed difference (WSS_GENERIC)
C1001	Valve relay fault	Valve relay fault (Failsafe relay)
C1002	Front inlet valve fault	Front inlet valve (1) fault
C1003	Front outlet valve fault	Front outlet valve (2) fault
C1004	Rear inlet valve fault	Rear inlet valve (1) fault
C1005	Rear outlet valve fault	Rear outlet valve (2) fault
C1006	ABS pressure sensor fault	Hardware fault
C1007	ABS pressure sensor fault	Offset fault
C1008	ABS pressure sensor fault	Power supply fault

C0020	ABS general malfunction	ABS pump motor fault
C100A	ABS general malfunction	ABS unit power circuit fault
C100B	ABS general malfunction	ABS electronic control unit fault
U0121	ABS control unit communication error	No Frame – Frame Counter
U0315	ABS control unit Compatibility Error	ABS control unit not compatible

Select the function "ABS system information"

This tester function displays the identification data for the ABS system, such as Software version and BARCODE
e.g.:
Software Version 6789
Barcode Data: HQOJM98200RA

Operating principle

The Ducati ABS brake system manages the front and rear brake systems separately. The operating mechanism consists of a pulse generator (phonic wheel), with a ring of slots, fitted onto each wheel. There are HALL sensors on LH fork leg bottom end and on rear brake calliper holder plate. With vehicle running, they read the slots on the phonic wheel thereby detecting instant wheel speed. These sensors output data to ABS control unit, which contains software with a special control algorithm developed by Ducati. The software compares the vehicle average speed with the instant wheel speed reading and assesses any slipping condition. If control values are exceeded when the rider commands a certain pressure on brake calliper, the control unit shall hydraulically control the braking system, which is nearly locked up. The system can modulate pressure at the calliper through a set of solenoid valves which first prevent any further increase of hydraulic pressure (**1** valve closing), and then make the pressure decrease (**2** valve opening). The **2** valve is opened in a series of pulses (with less than 10 milliseconds between successive pulses), to reduce pressure in steps. When the wheel begins to turn again in response to the diminished braking force applied and its rotation speed reaches the reference value, the exhaust valve **2** will be closed. Simultaneously, the inlet valve **1** is reopened, restoring normal operation of the brake system. The ABS control unit can monitor and modulate brake force in the three following different conditions: dry road surface (high grip), wet or slippery road surface (poor grip) and uneven road surface. ABS functionality is disabled at vehicle speeds lower than 5 km/h.

The hydraulic component of the ABS system consists of a primary circuit (from the cylinder to the control unit and from the control unit to the calliper) and a secondary circuit (completely within the control unit).
Please find below a chart explaining ABS hydraulic operation.

Key to ABS hydraulic system colours:
Green: oil delivery
Light blue: oil return

Key to ABS hydraulic system

A	Rear brake master cylinder
B	Front brake master cylinder
1A	Rear brake calliper inlet valve
1B	Front brake calliper inlet valve
2A	Rear brake calliper exhaust valve
2B	Front brake calliper exhaust valve
3	Brake master cylinder
4	Little tanks
5A	Rear calliper
5B	Left front calliper
6B	Right front calliper
7	Pressure transducer

Brake system diagram.

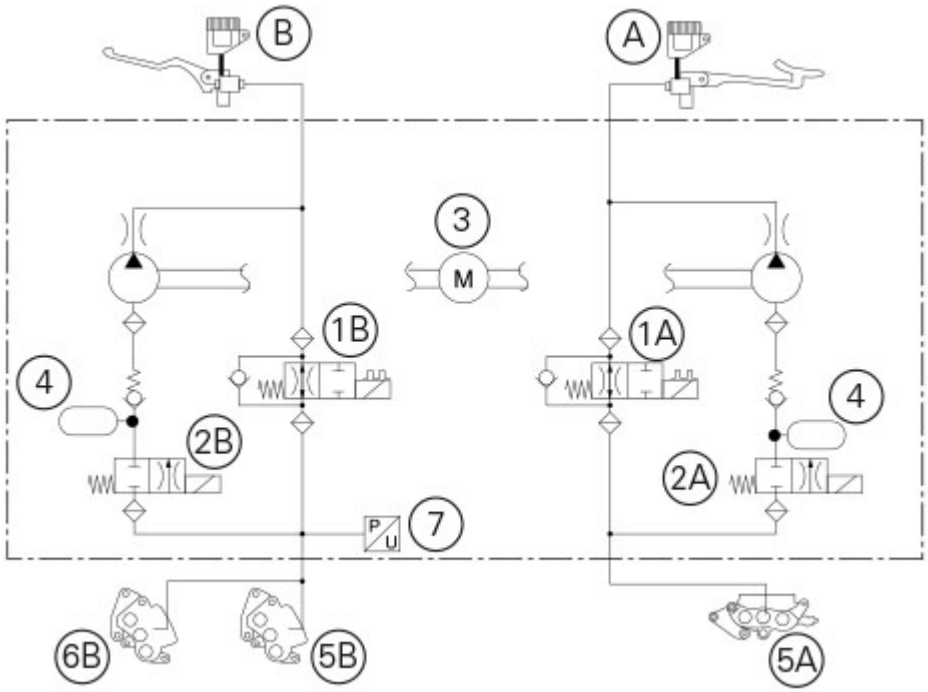

Braking without ABS.

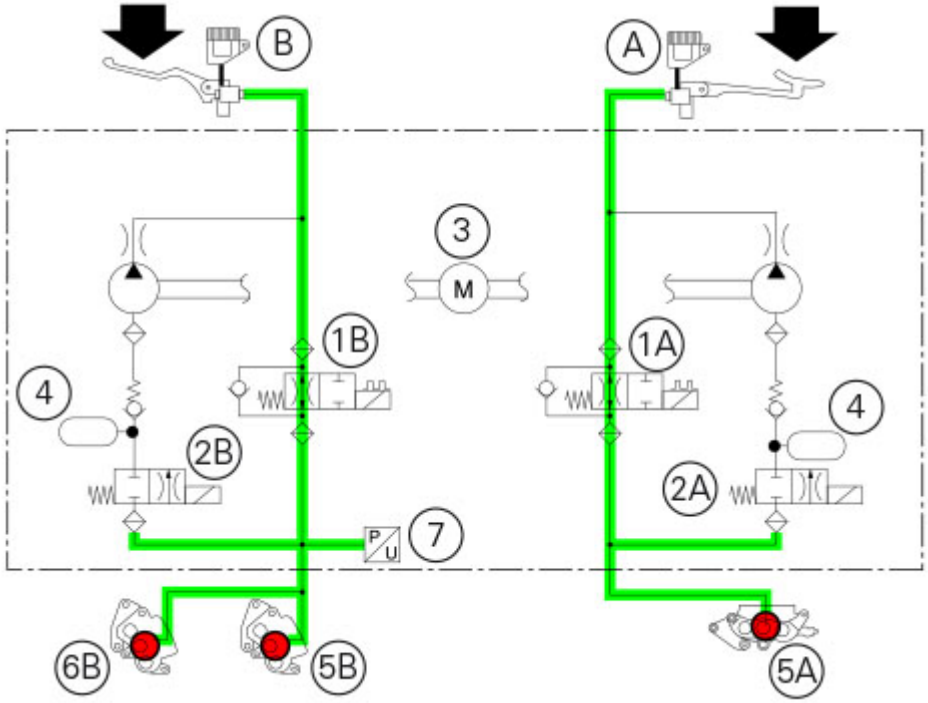

ABS 1 modulation: braking.

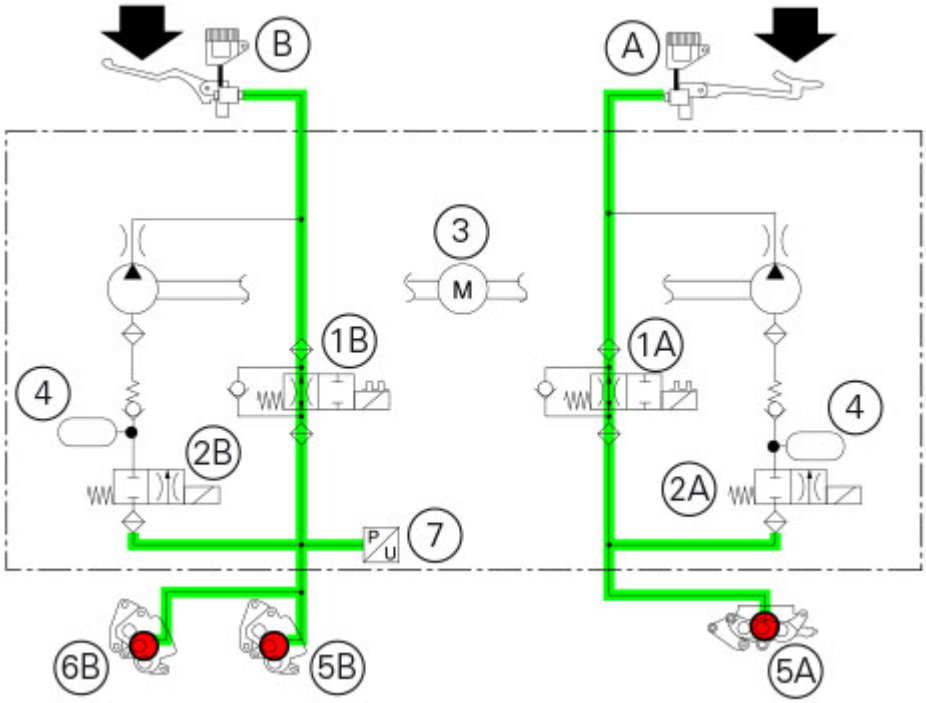

ABS 2 modulation: pressure partial reduction on callipers.

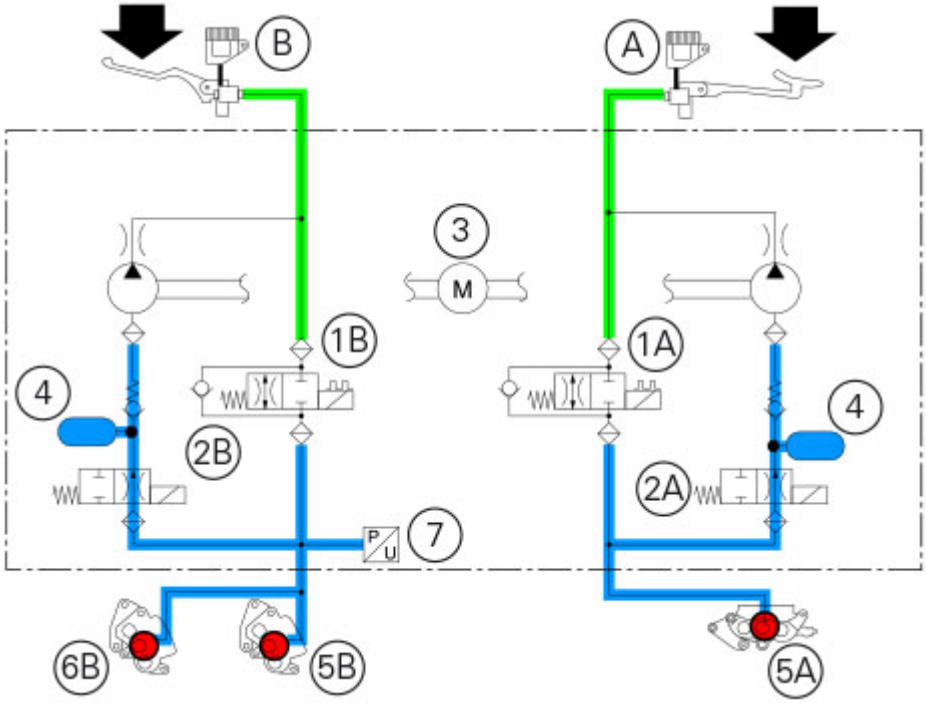

ABS 3 modulation: pressure total reduction on callipers.

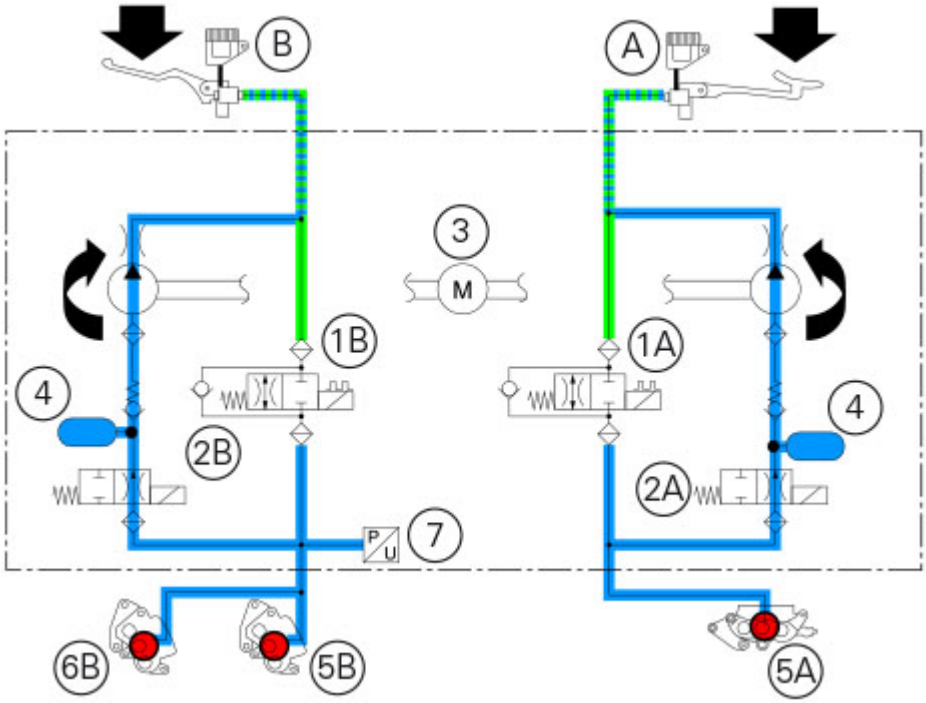
B
A
3
M
1B
1A
4
4
2B
2A
P
U
7
6B
5B
5A

Routing wiring harnesses/hoses

The routing of the ABS system wiring has been optimised to ensure the minimum obstruction.
Each section is designed to prevent interference with parts that might damage wires or cause operating failures when riding.

Table	Position	Description
Table A	1	ABS control unit
Table A — Table B — Table C — Table D — Table E — Table F — Table G	2	Front brake calliper hose
Table A — Table B — Table C — Table D — Table E	3	Front brake master cylinder
Table A — Table B — Table C — Table I — Table L — Table M — Table O — Table P	4	Rear brake calliper hose
Table A — Table B — Table C — Table I — Table L — Table N	5	Rear brake master cylinder
Table F — Table G — Table H	6	Hose from right front calliper to left calliper
Table F — Table G — Table H	7	Front speed sensor cable
Table M — Table O — Table P	8	Rear speed sensor cable

Table A

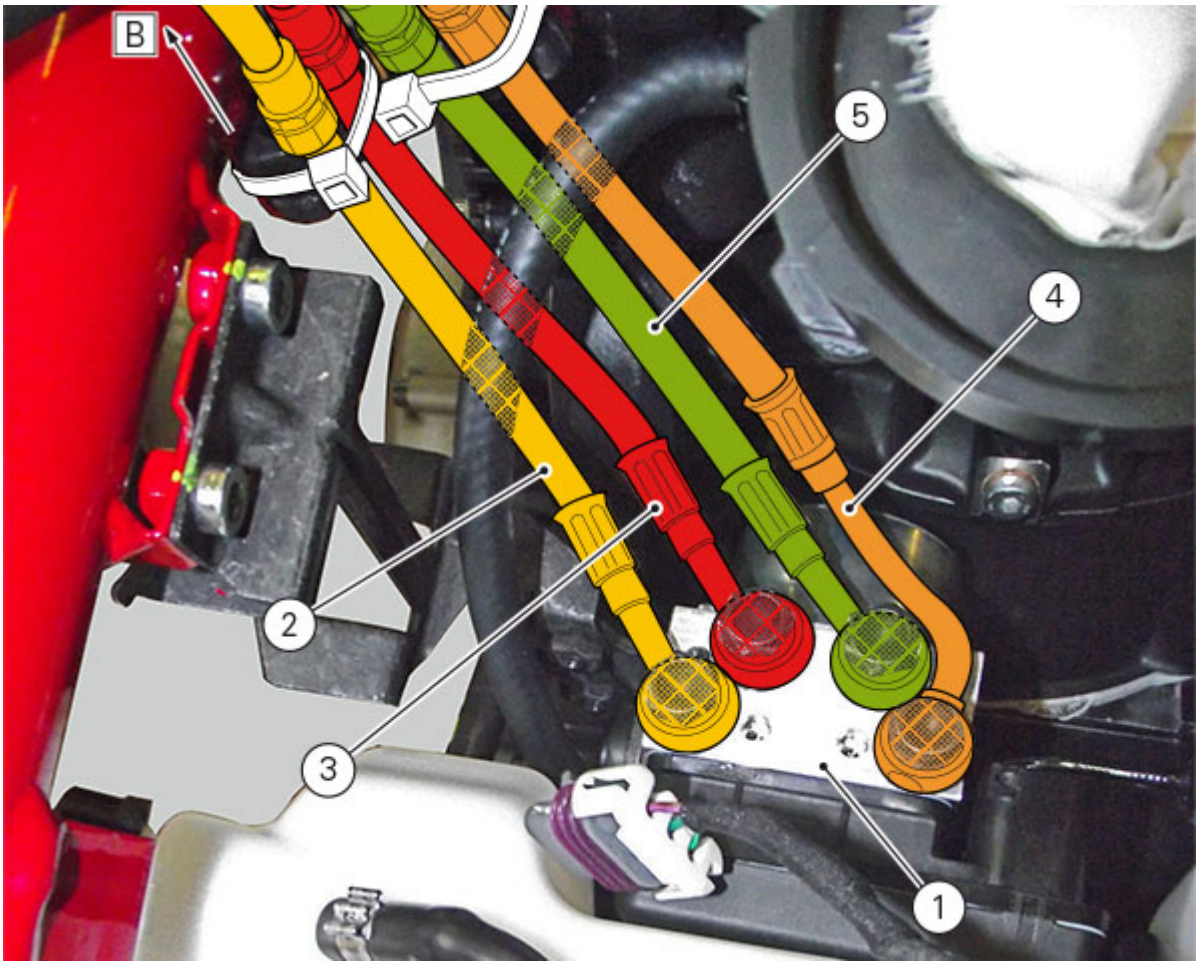

Table B

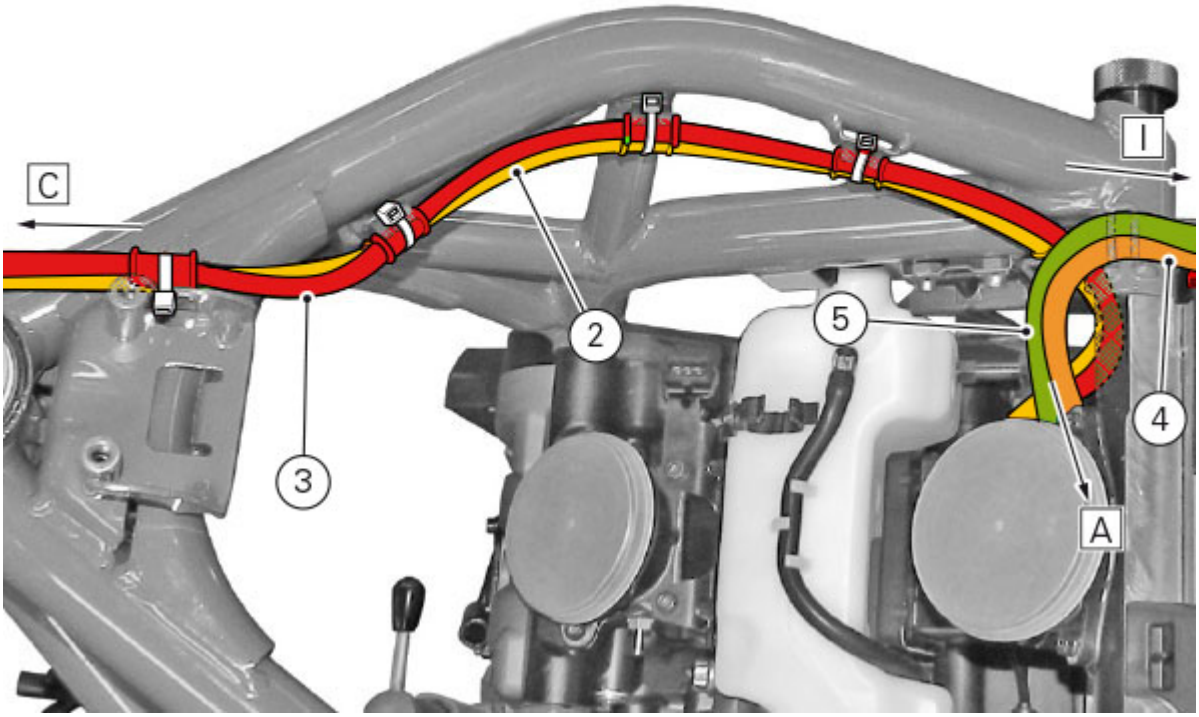

Table C

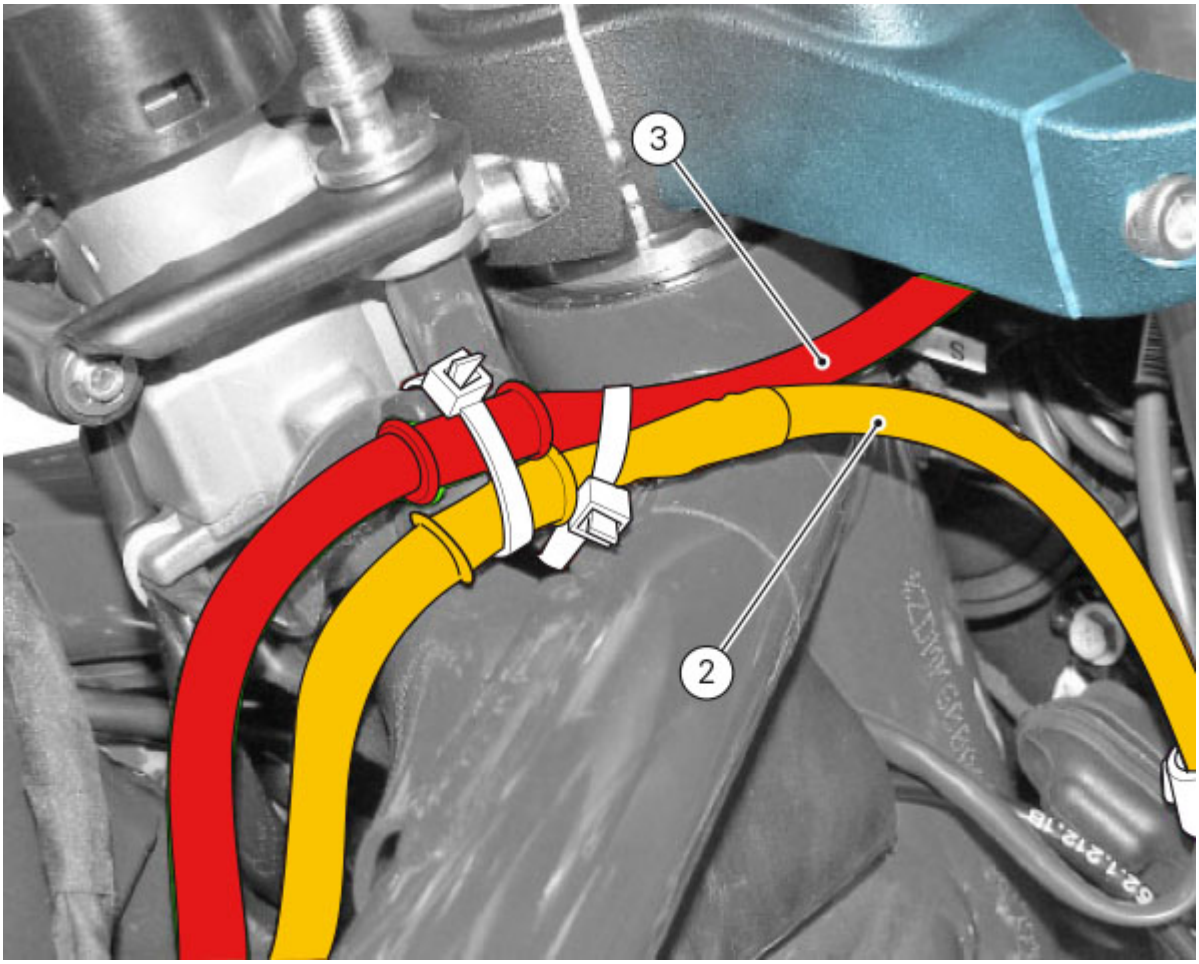

Attention

Check, with the handlebar fully right, that hoses do not contact the steering head.

Table C (USA ONLY)

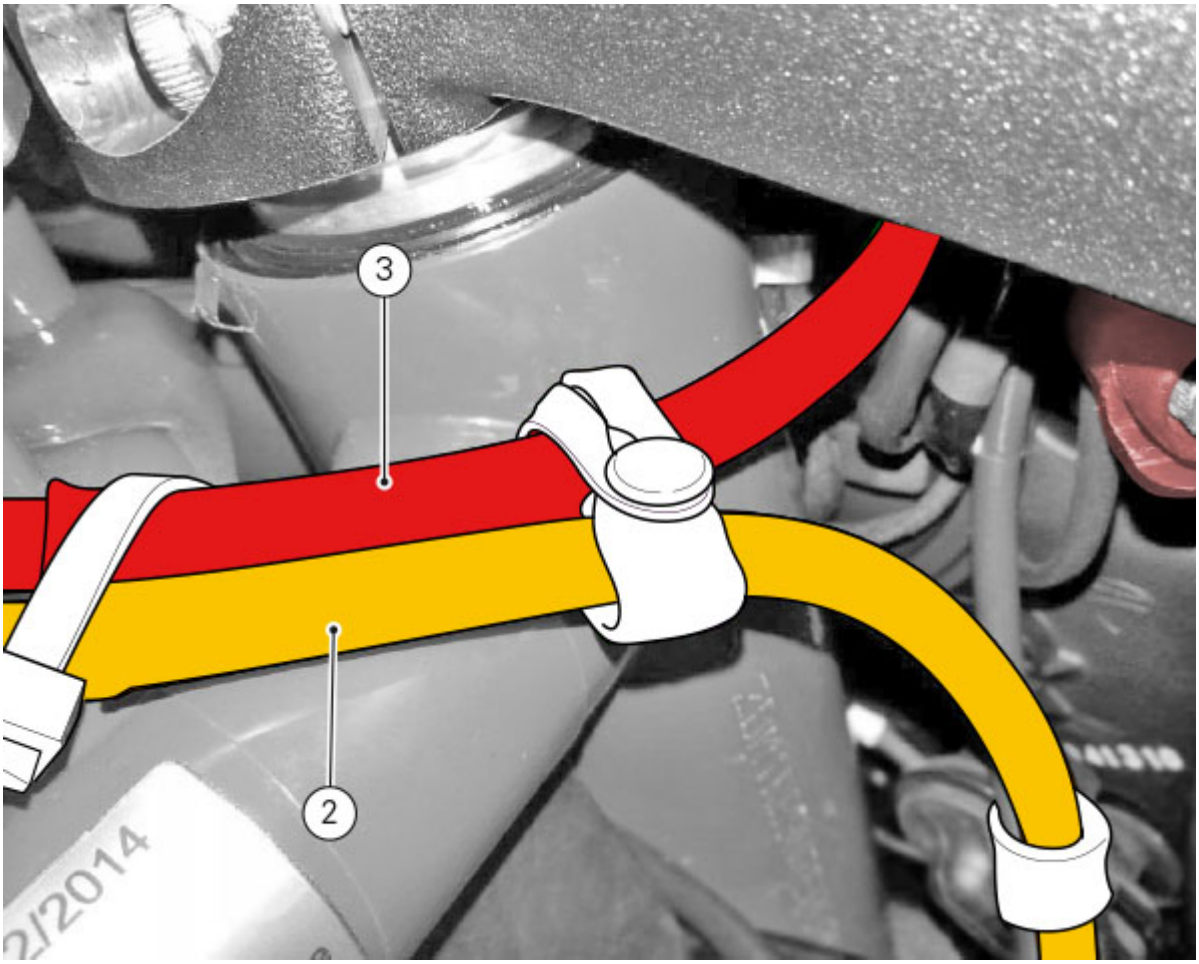

Attention
Check, with the handlebar fully right, that hoses do not contact the steering head.

Table D

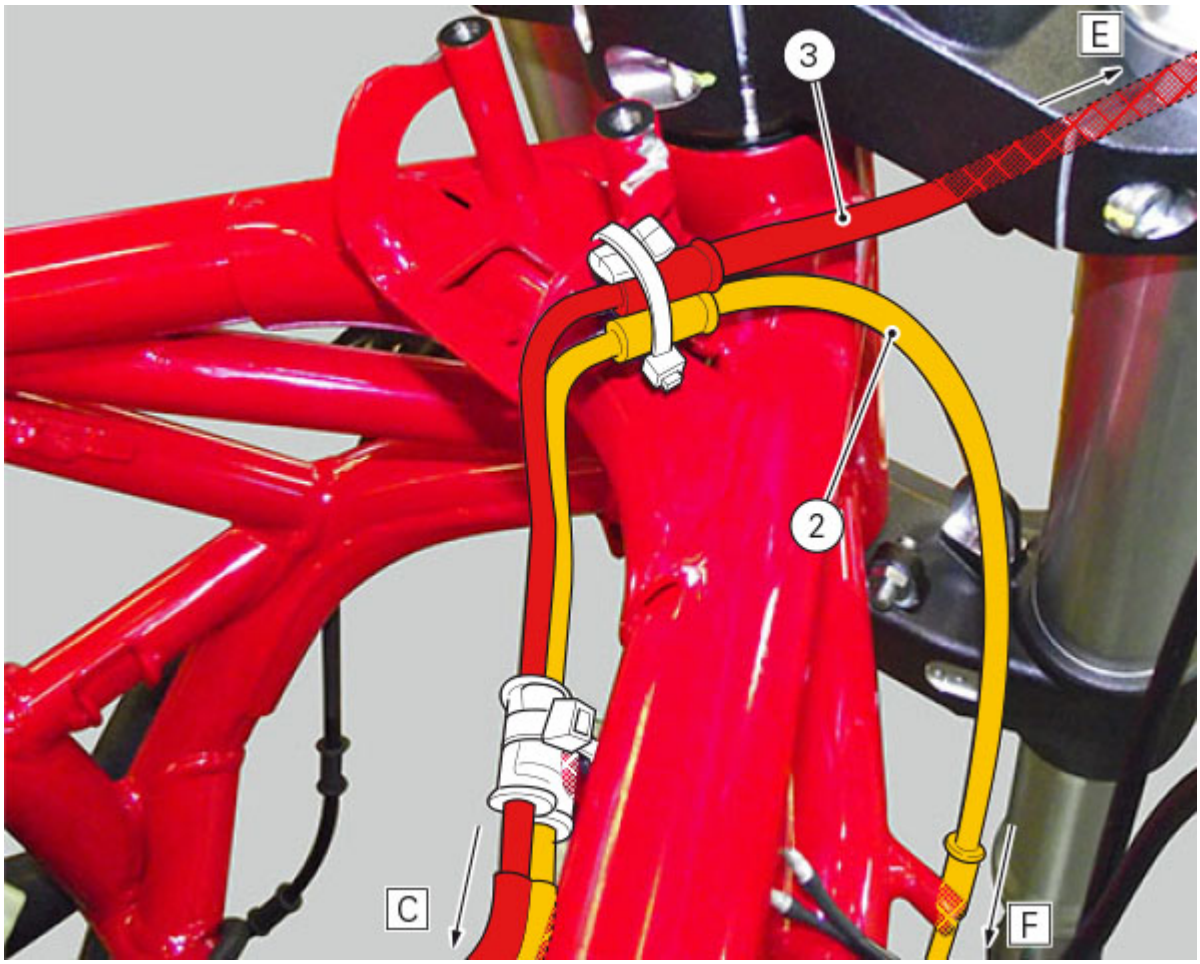

Table E

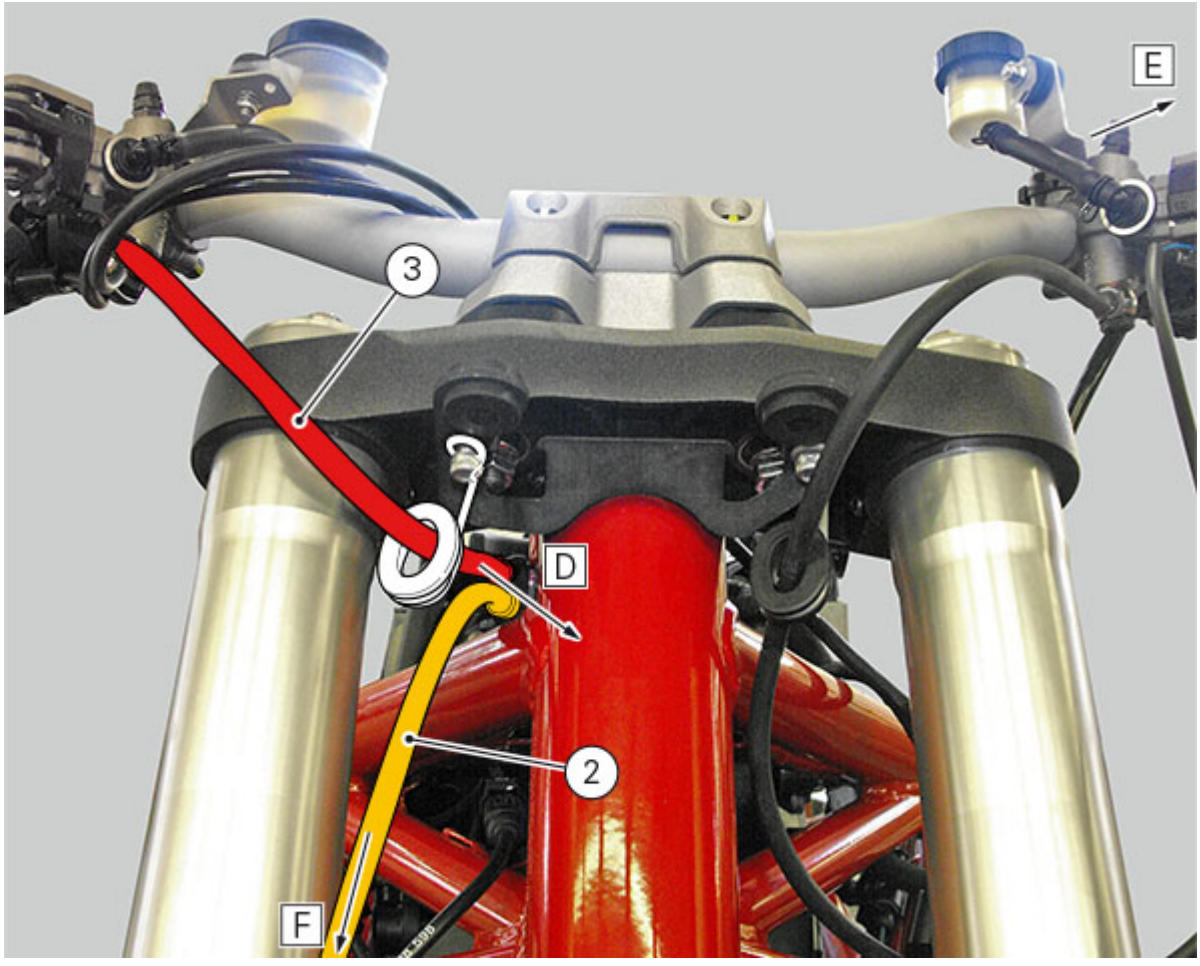

Table F

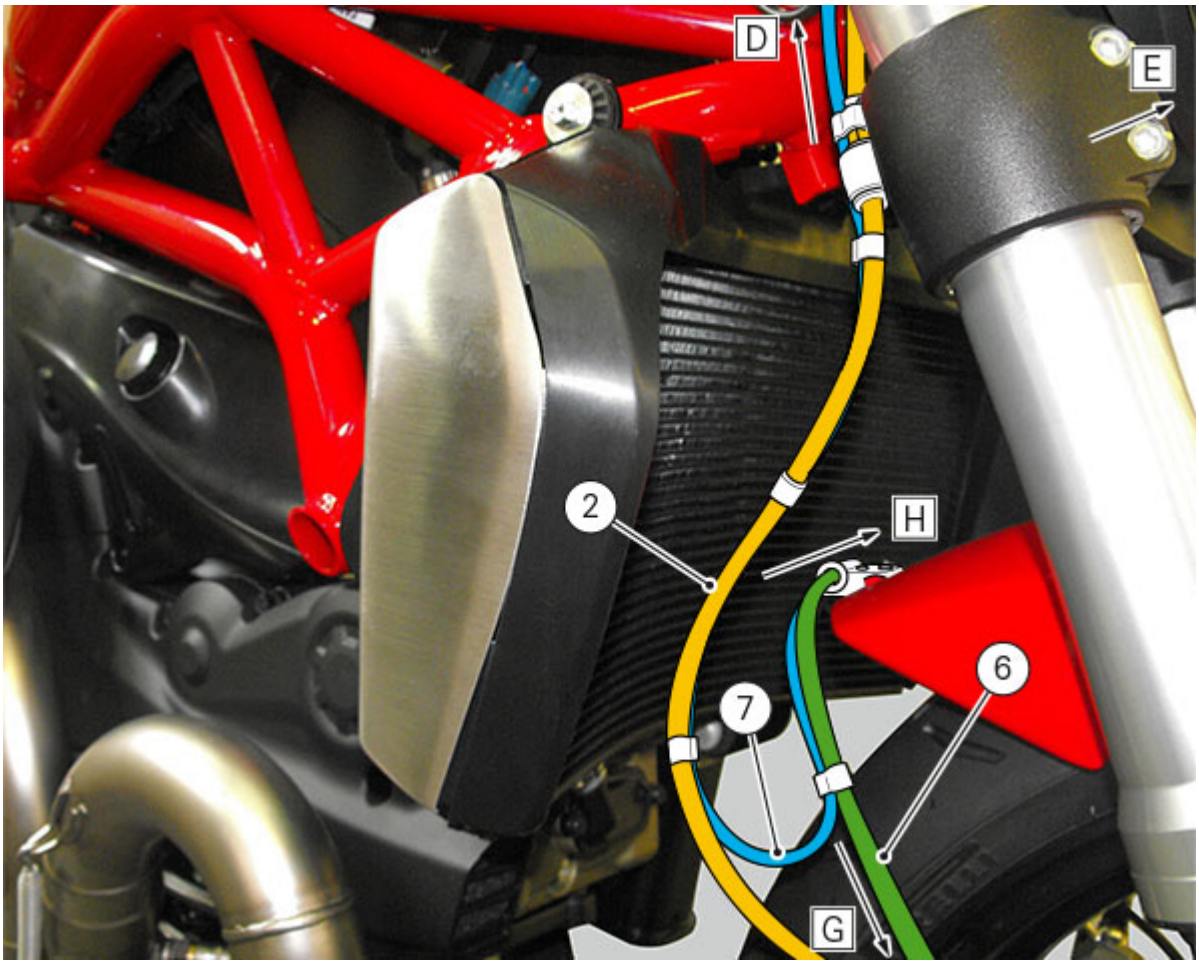

Table G

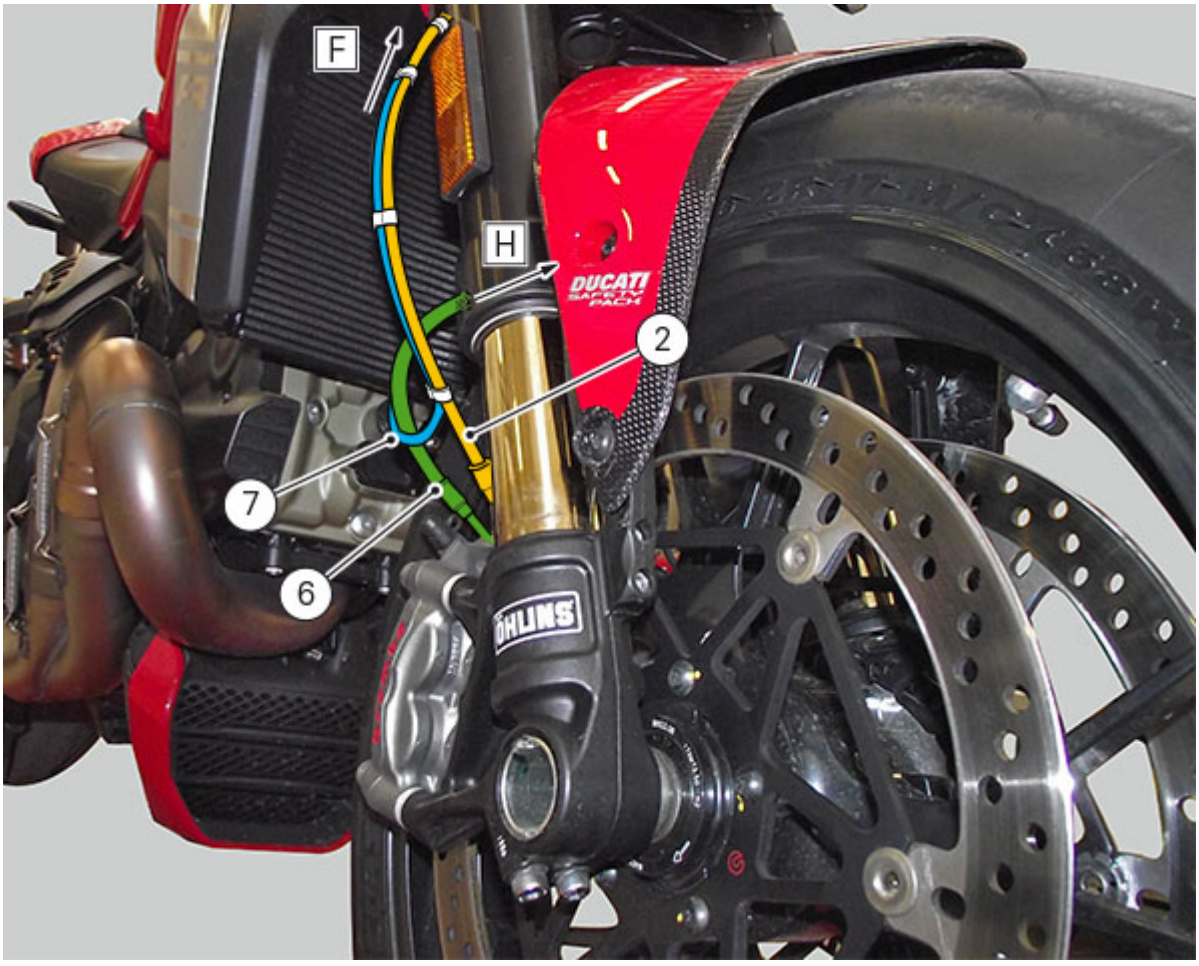

Table H

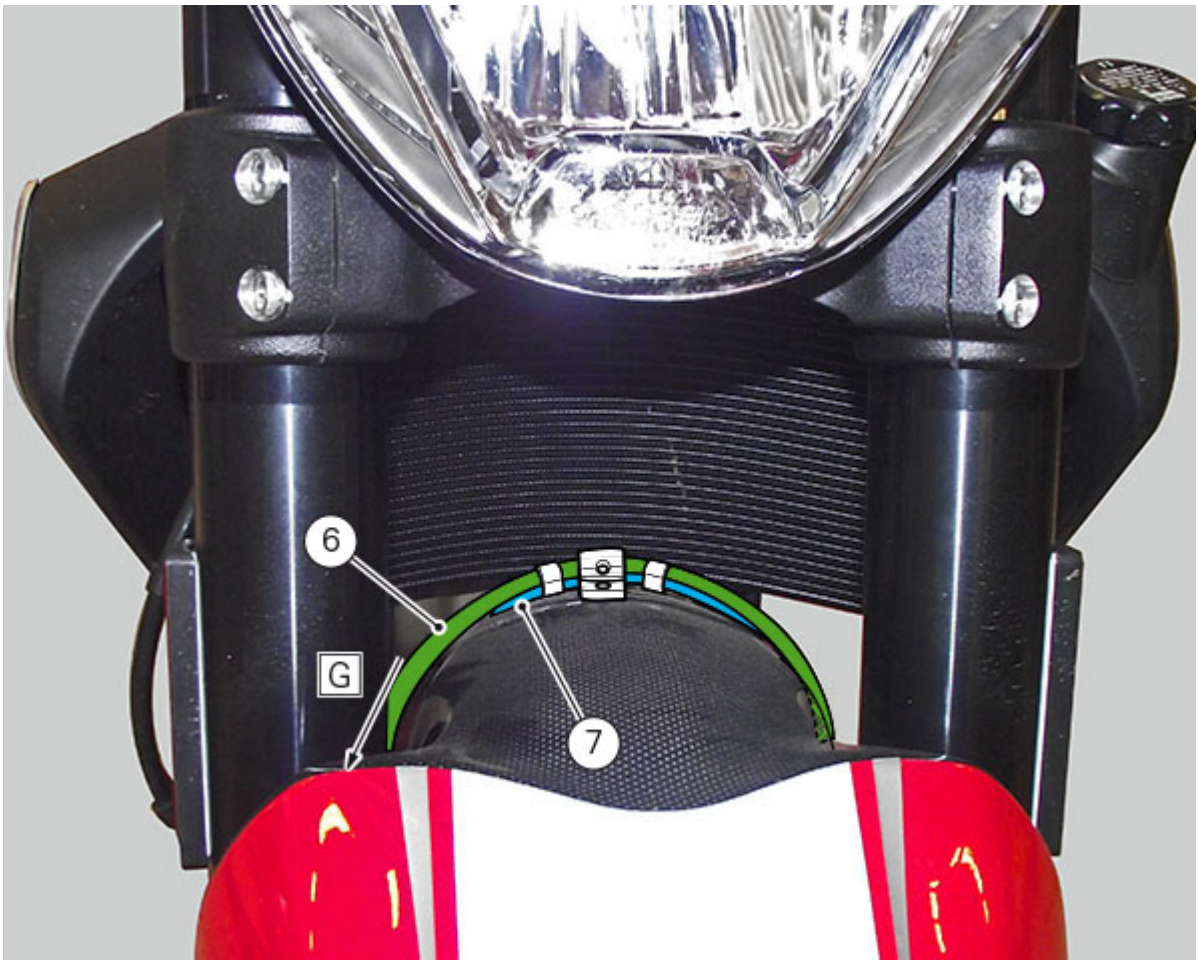



Table I

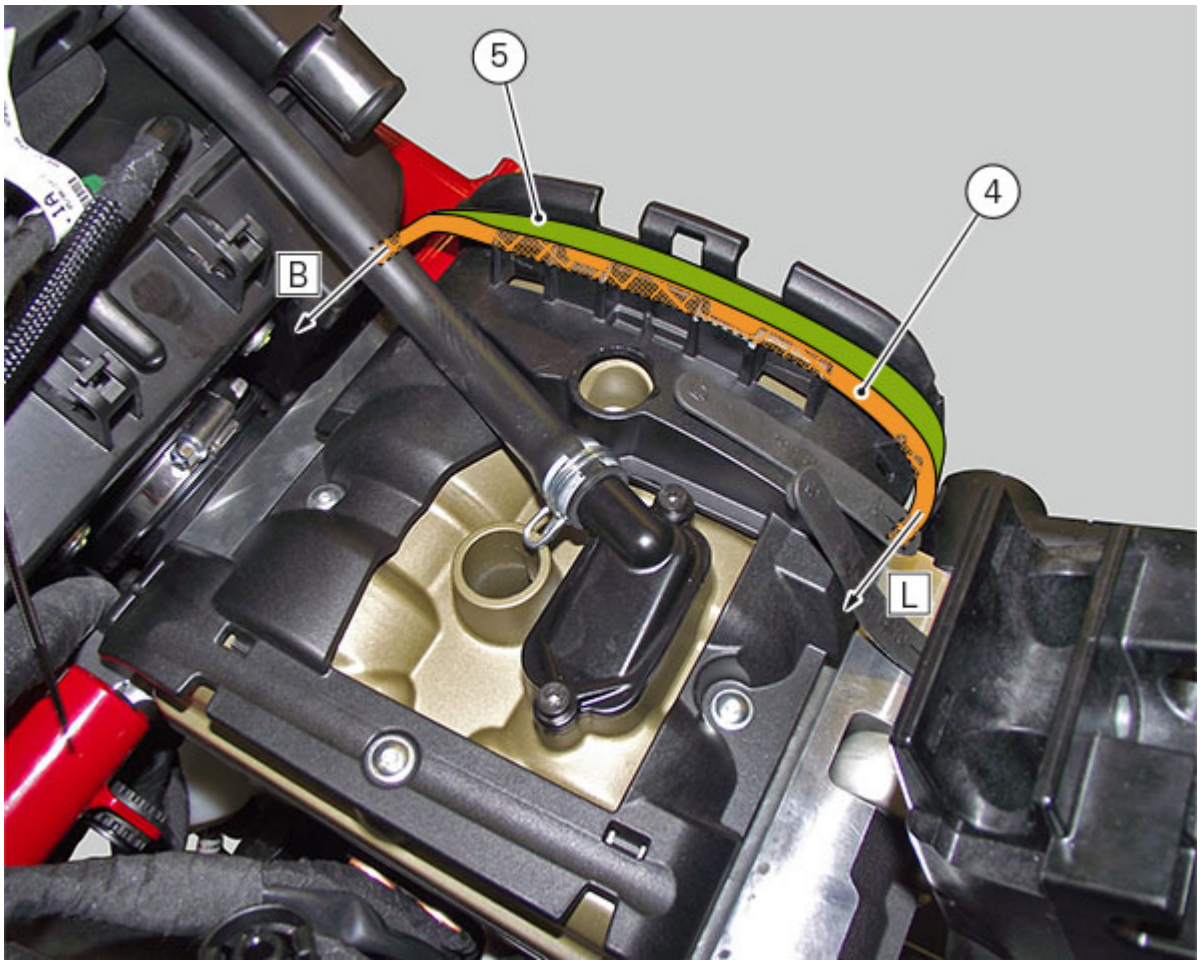

Table L

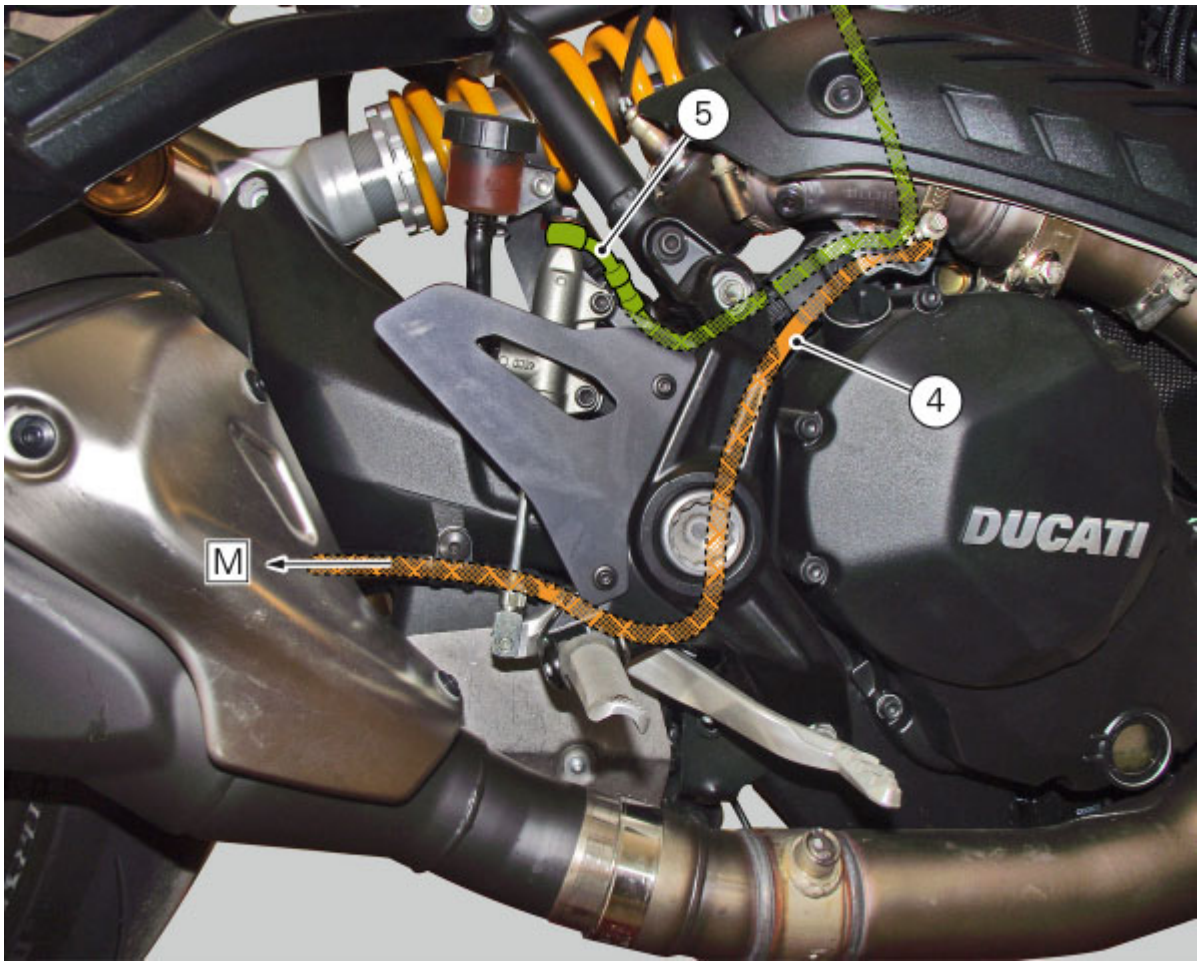

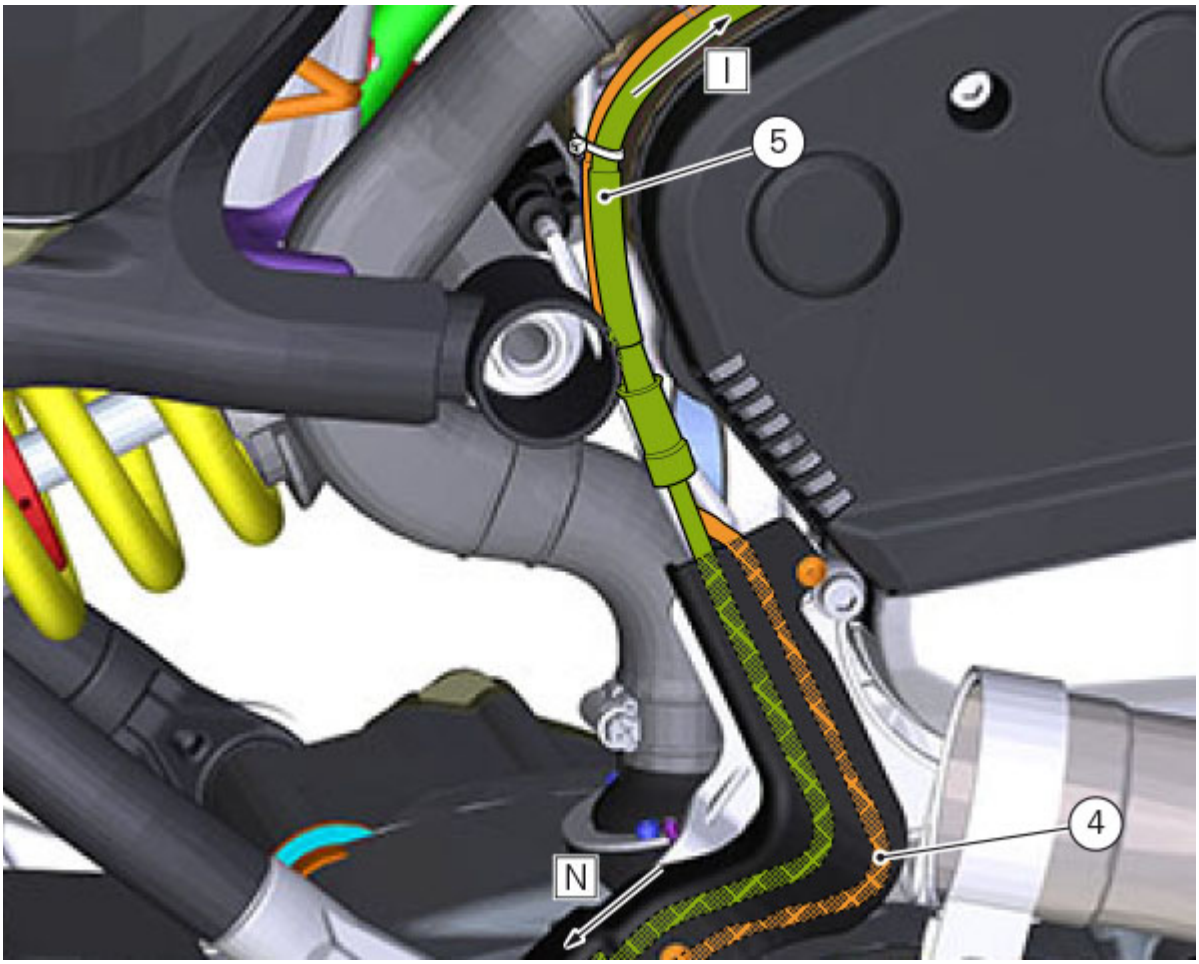

Table M

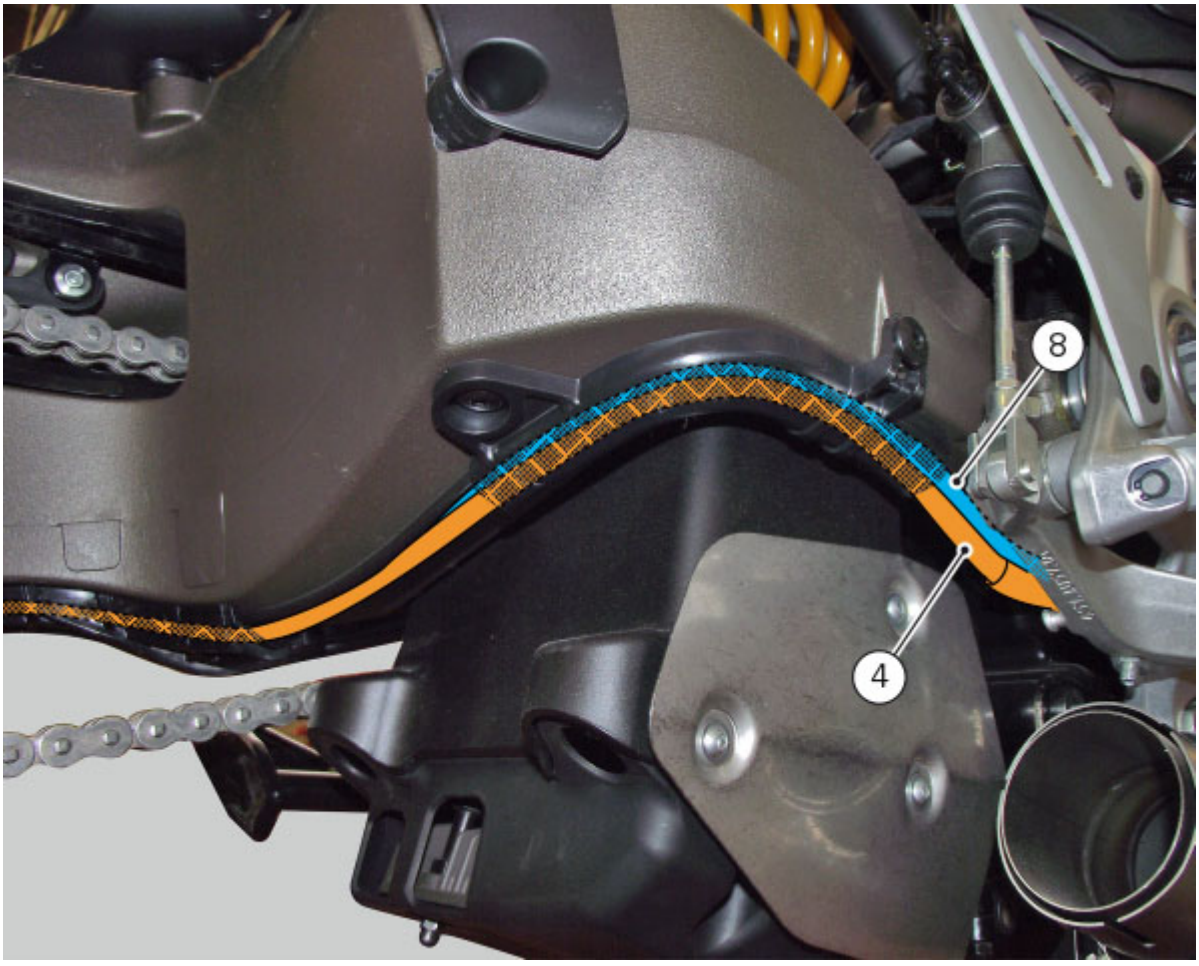

Table N

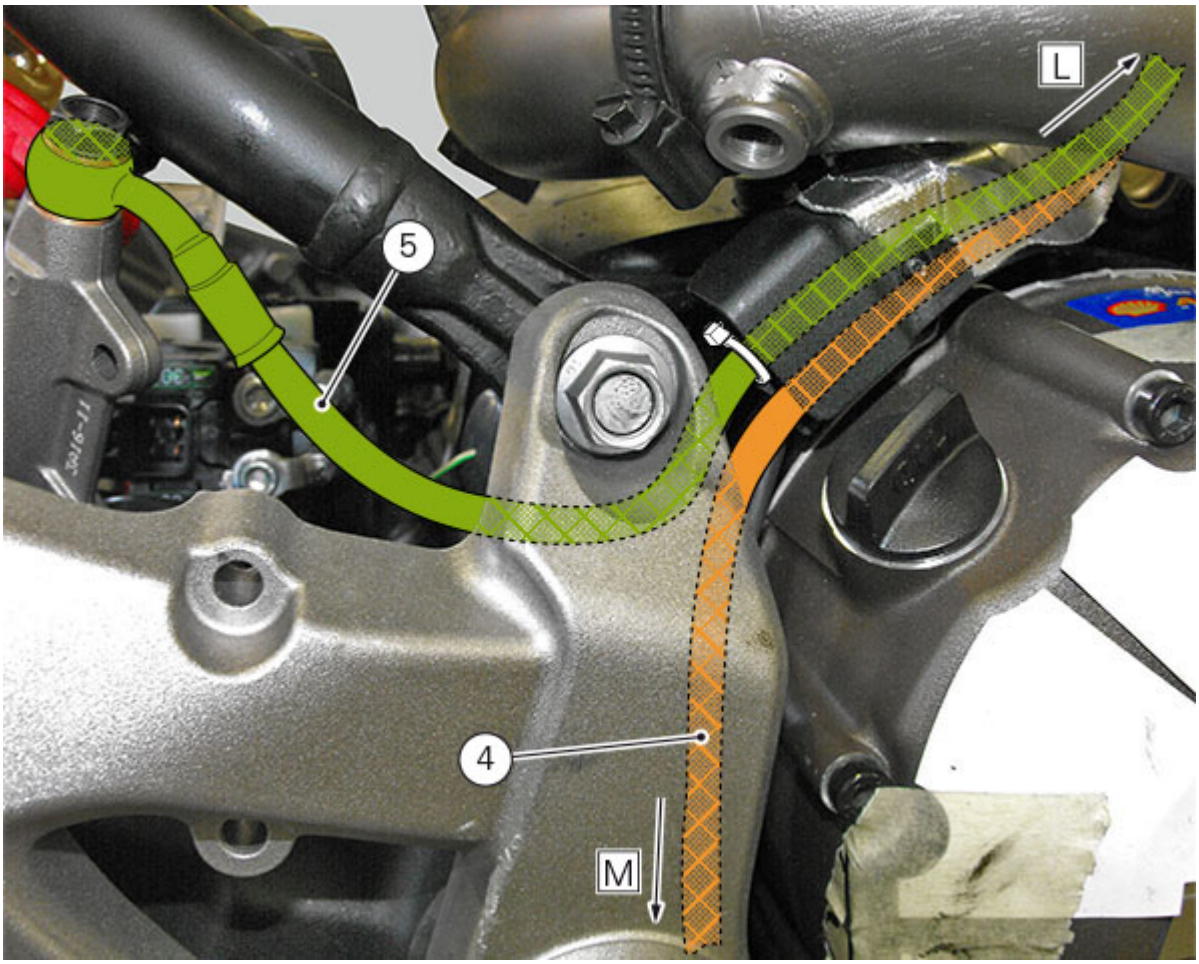

Table O

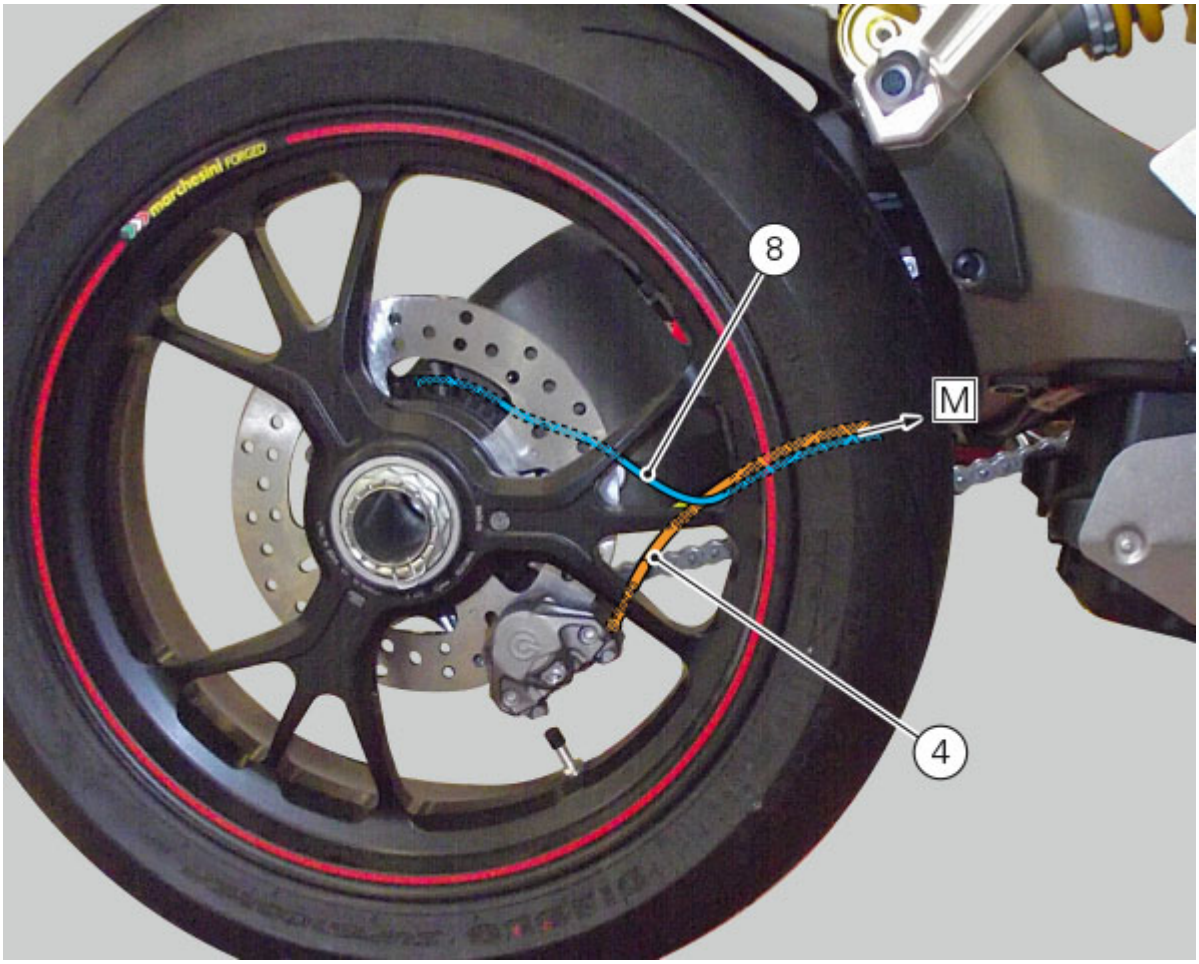

Table P

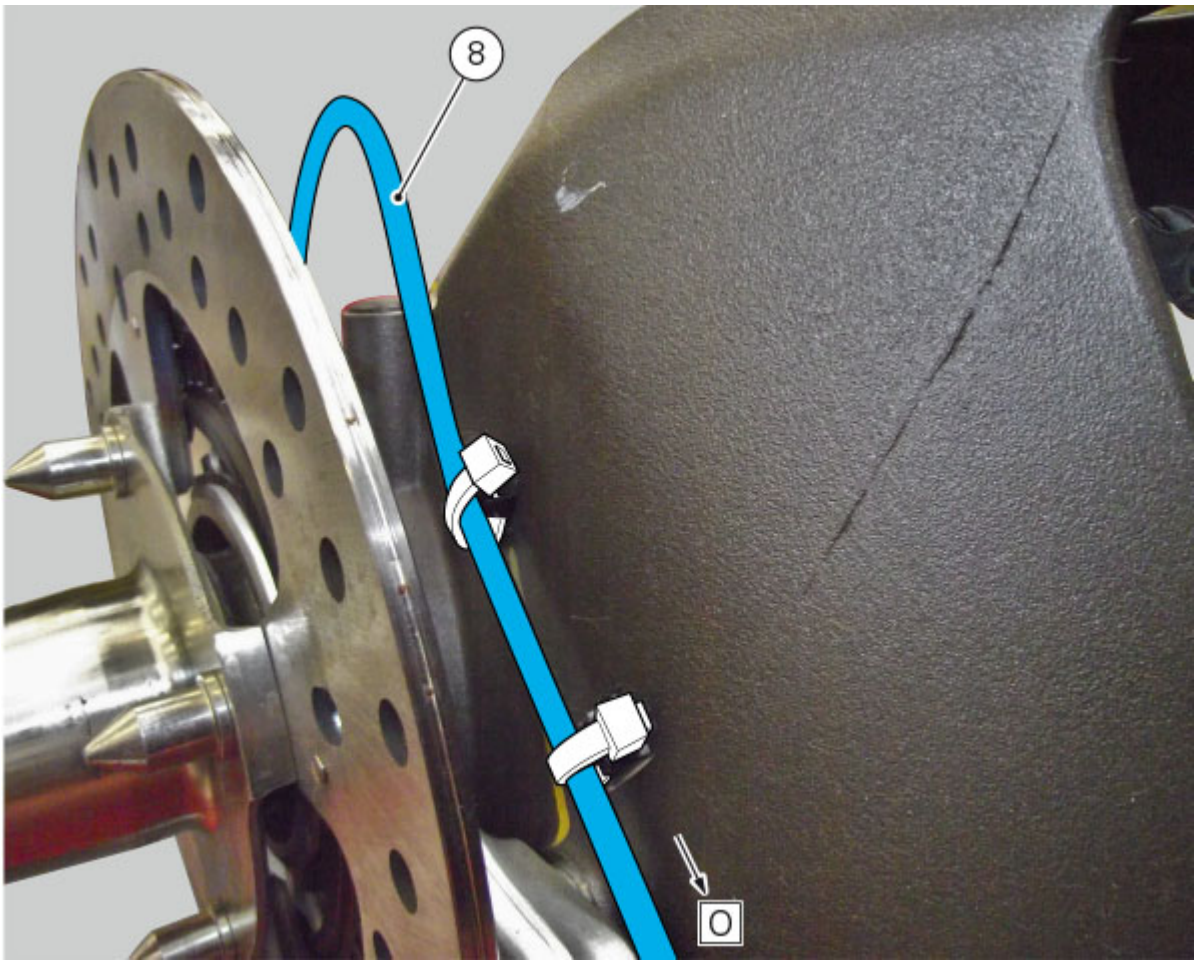
8
O

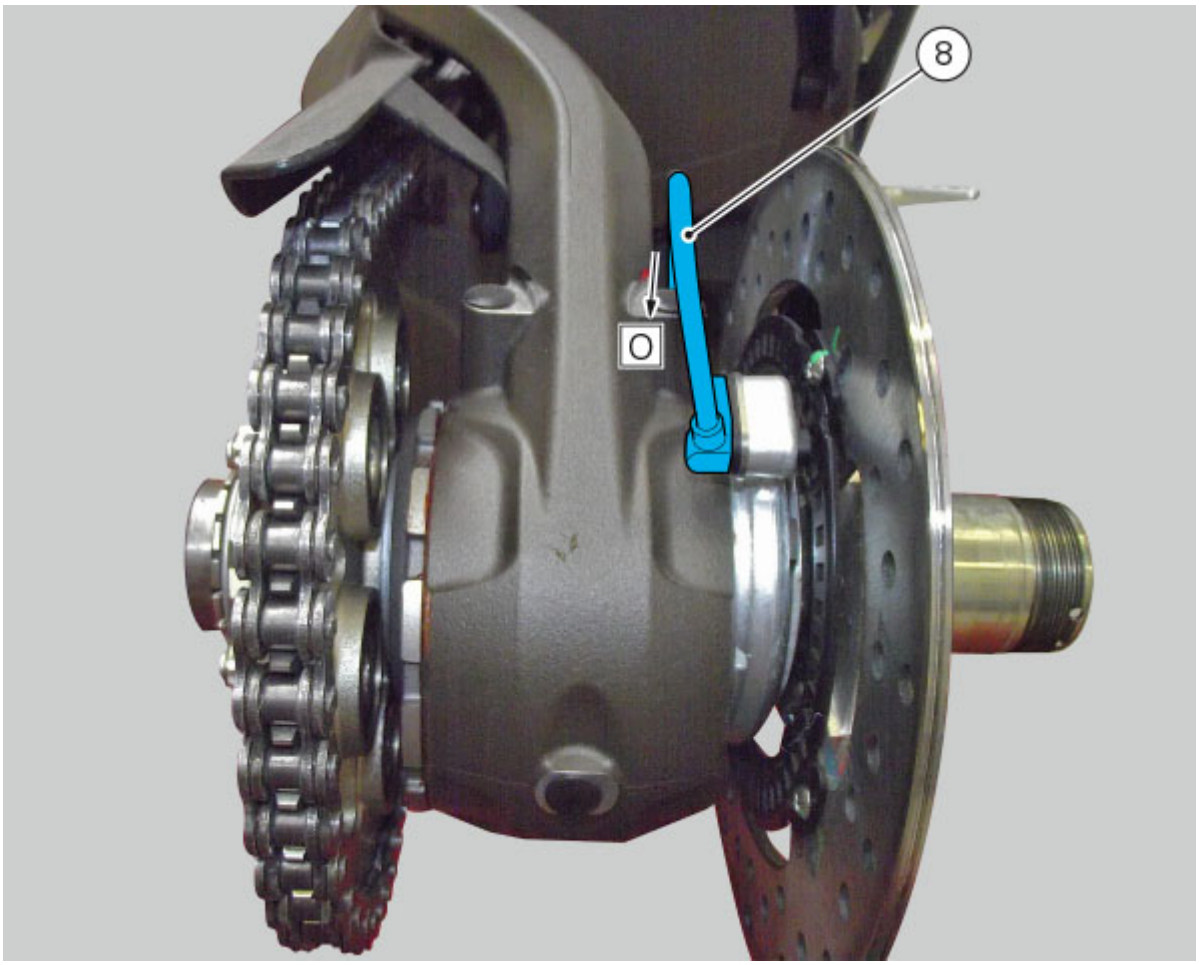
8
O

Refitting the ABS control unit

Hoses (8), (7), (6) and (5) must be secured in place using new sealing washers (9) on unions.
Tighten the four special screws (4) fastening hoses (5), (6), (7) and (8) to a torque of 23Nm±10% on ABS control unit (2).

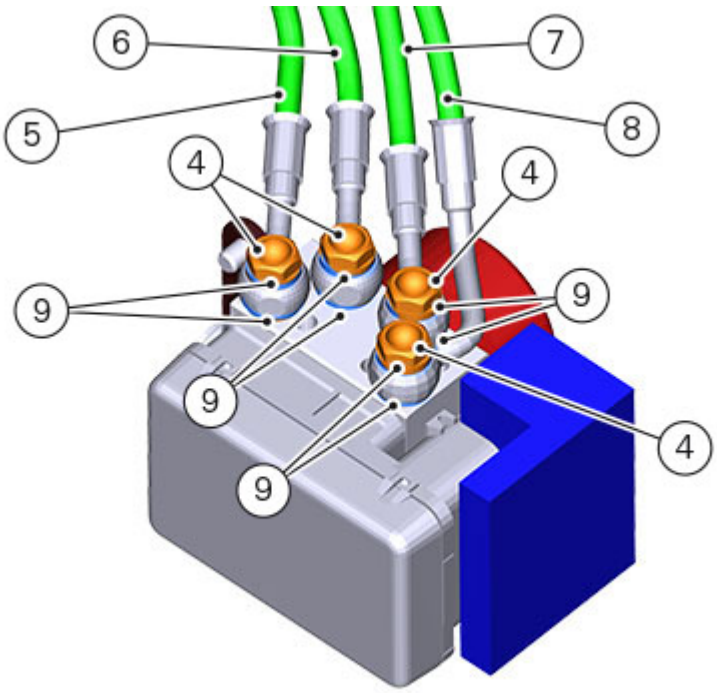

Position ABS control unit (2) on vehicle and route hoses as described in "Routing wiring harnesses/hoses".
Tighten the two screws (3) to a torque of 6.8Nm±1Nm.

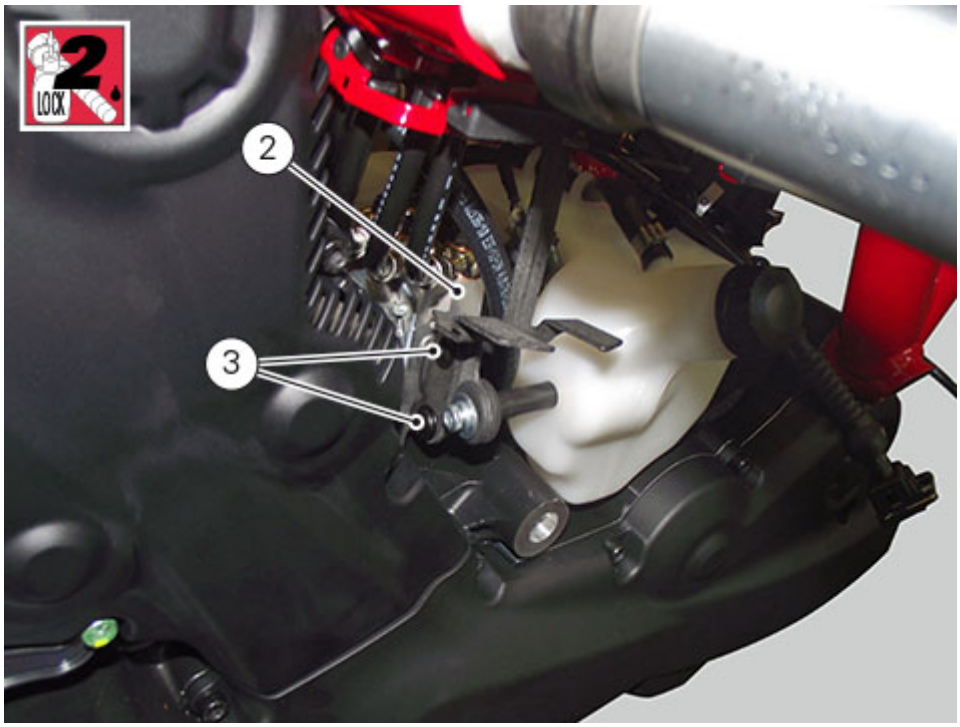

Important

If the ABS hydraulic control unit has been replaced, it will be supplied with the secondary circuit already filled with fluid. Control unit must thus be assembled and the system filled and drained as a traditional system.

Connect ABS control unit (2) connector (1).

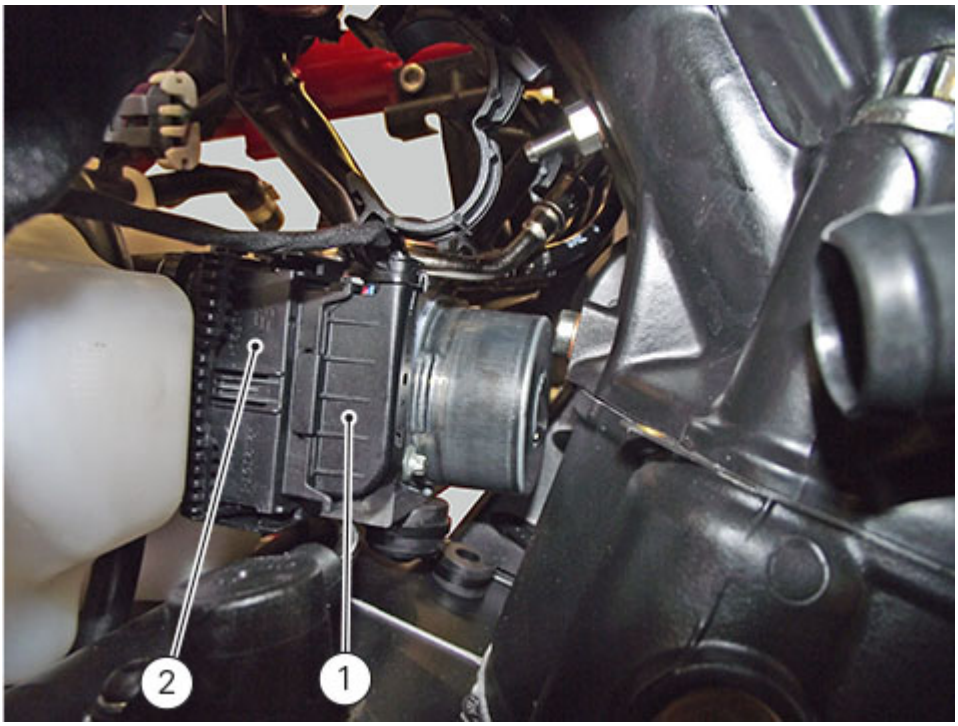

Make sure that hoses are routed as shown in the figure so as to avoid damages or malfunctions to both system and vehicle.

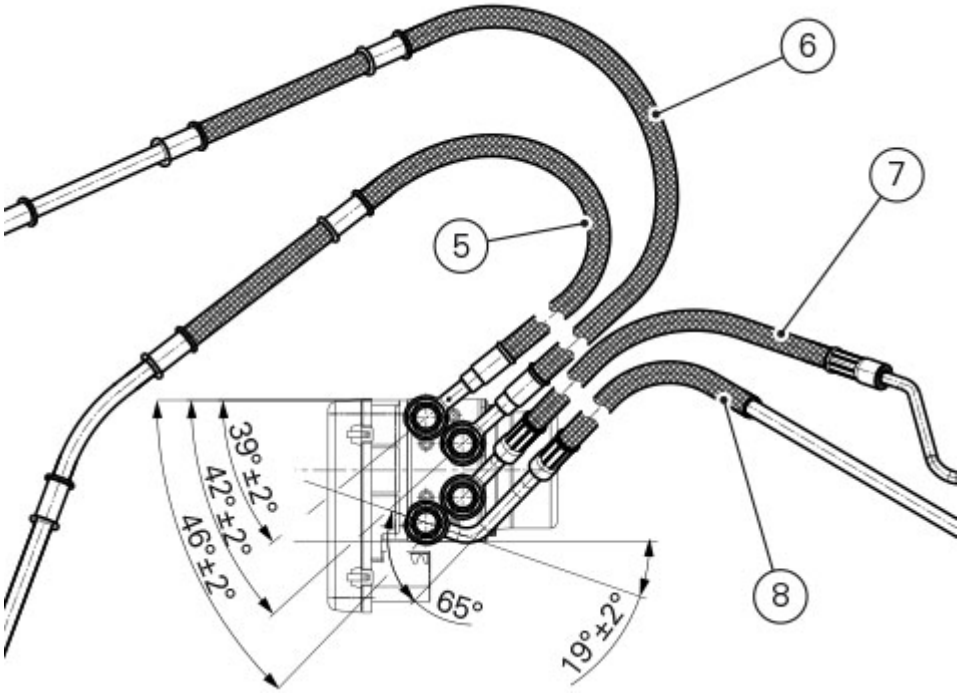

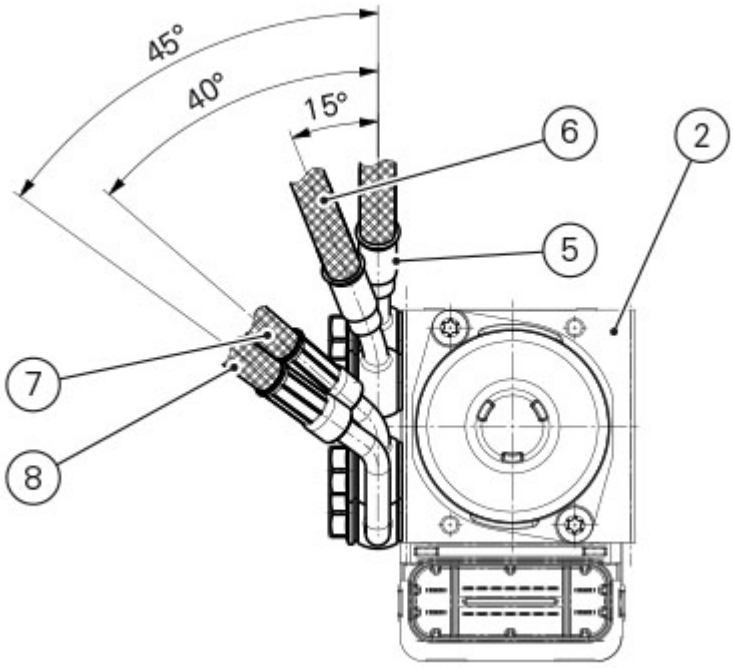

Refit the airbox and the throttle body (Refitting the airbox and throttle body).
Refit the fuel tank (Refitting the fuel tank).
Refit the seat (Refitting the seat).
Fill and bleed the brake system (Changing the fluid in the front brake system, Changing the fluid in the rear brake system).
Refit the RH and LH side covers (Refitting the battery).

Removing the ABS control unit

Remove the seat (Removing the seat).
Remove the fuel tank (Removing the fuel tank).
Remove the airbox and the throttle body (Removing the airbox and throttle body).

Drain off the hydraulic fluid from brake system hoses, by disconnecting these from the calliper and master cylinder, (Changing the front brake system fluid, Changing the rear brake system fluid).
Disconnect ABS control unit (2) connector (1), lift unit from the vehicle.

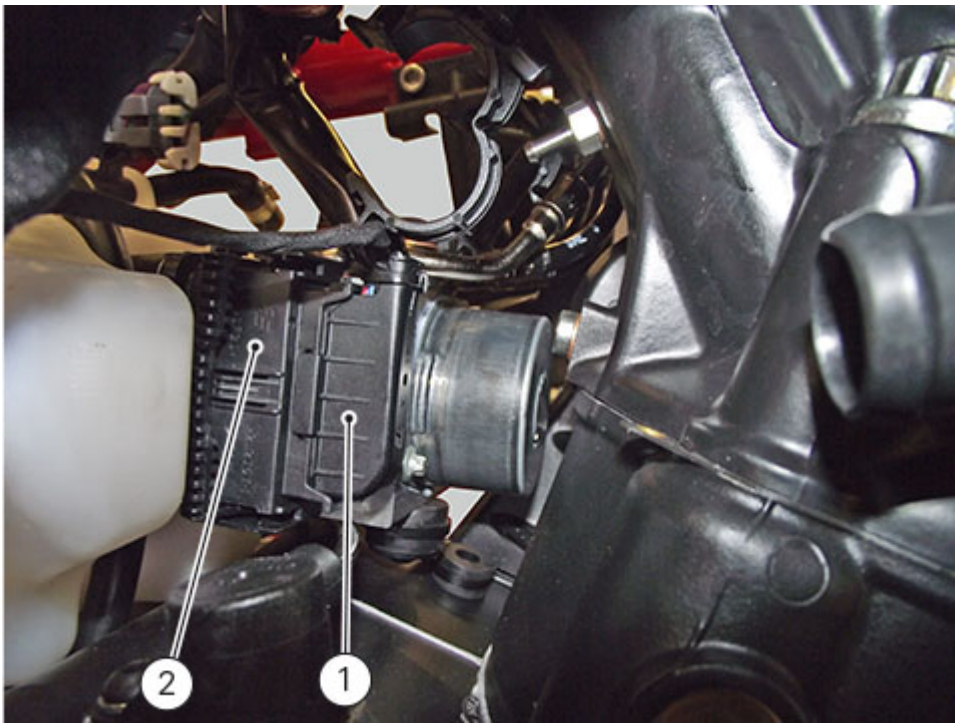

Loosen the two screws (3) and remove the control unit (2).

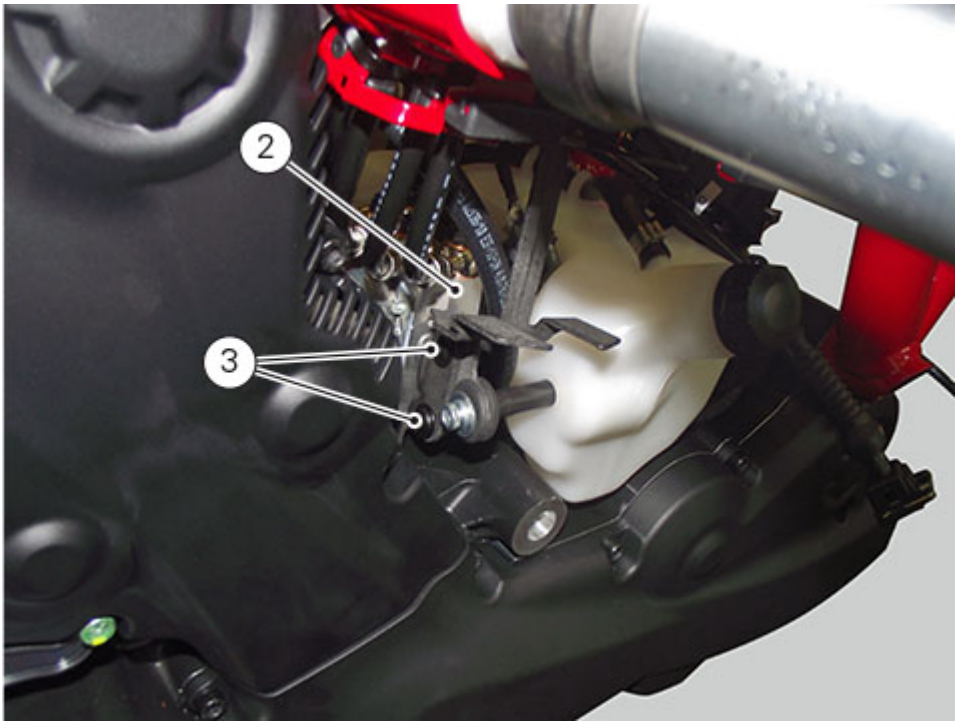

Loosen the four special screws (4) retaining pipes (5), (6), (7) and (8), on ABS control unit (2), by removing the seals (9).

Warning

Whenever removed, seals must be replaced by new ones of the same type on refitting.

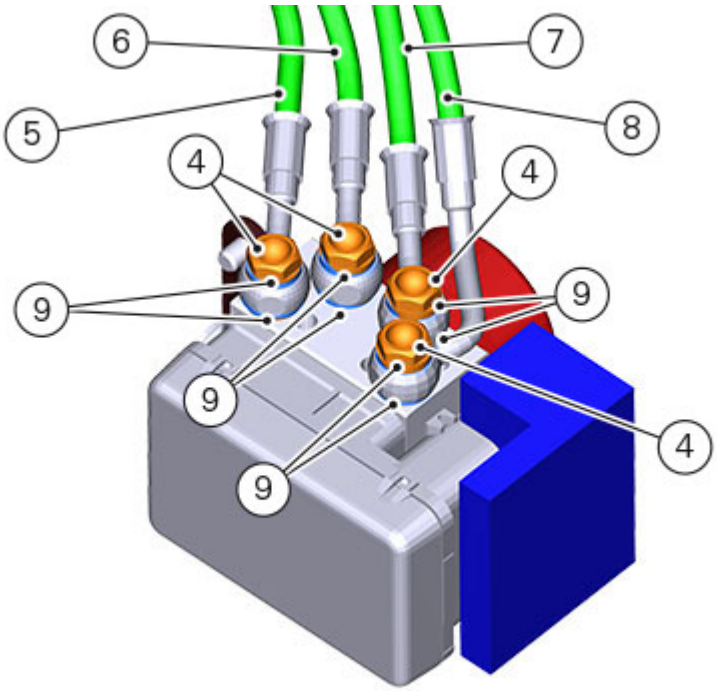

Important

Do not open the ABS control unit: if faulty, replace it.

Should it be necessary to replace one or several hoses, refer to "Routing wiring harnesses / hoses" of this section.

Changing the rear phonic wheel sensor

Remove the seat (Removing the seat).

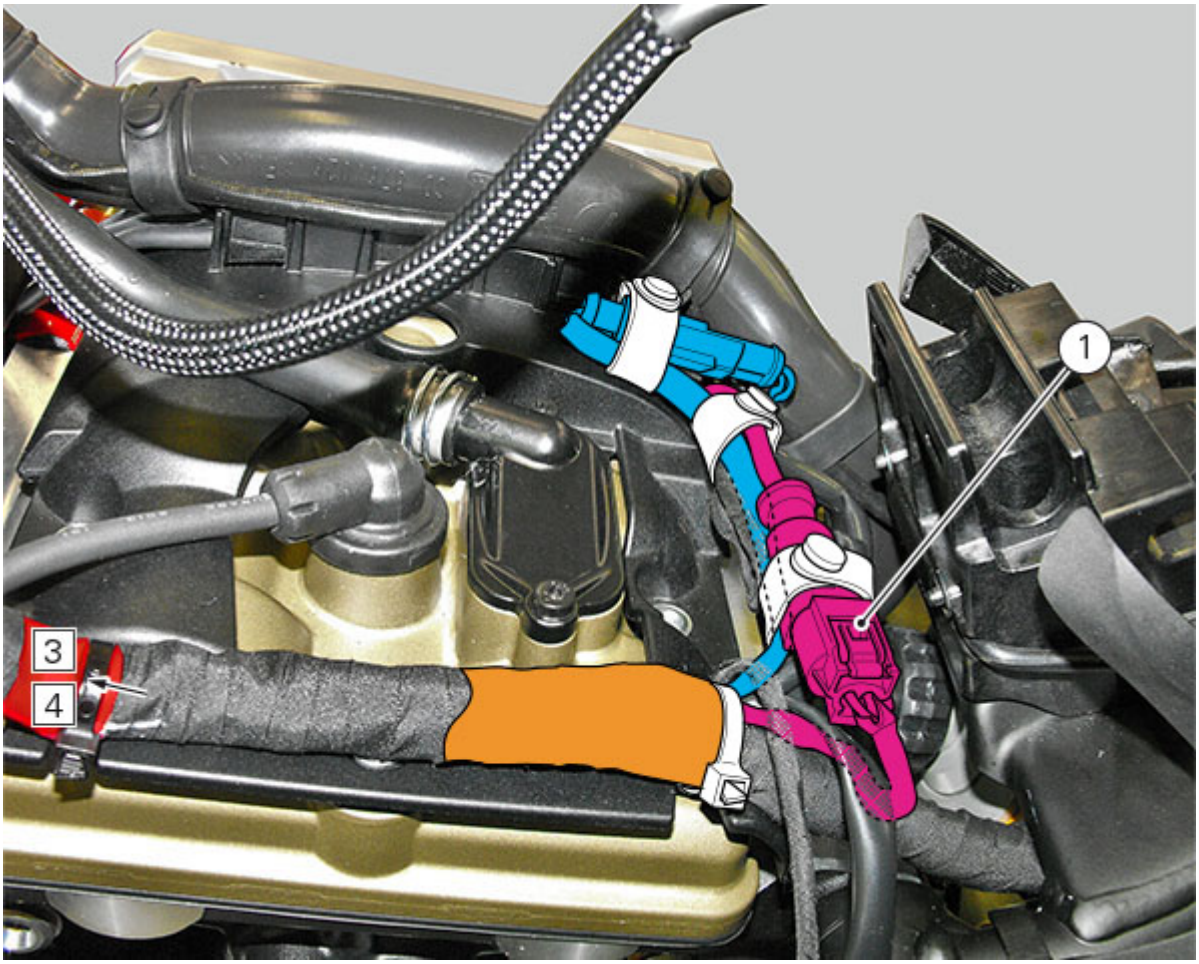

Disconnect connector (1) of rear ABS sensor (2) from main wiring. Open all clips retaining rear ABS sensor cable (2): refer to tables under Section "Routing wiring harnesses / hoses".

Remove the rear ABS sensor (2) from its seat on rear calliper holder plate (3), by loosening retaining screw (4) and collecting calibrated sealing washer (5).
Check air gap between new rear ABS sensor (2) and rear phonic wheel (6) as explained under: "Adjusting the AIR-GAP of phonic wheel sensor".
Fasten the sensor to the calliper holder plate by tightening screw (4) to a torque of 10Nm ± 10%.

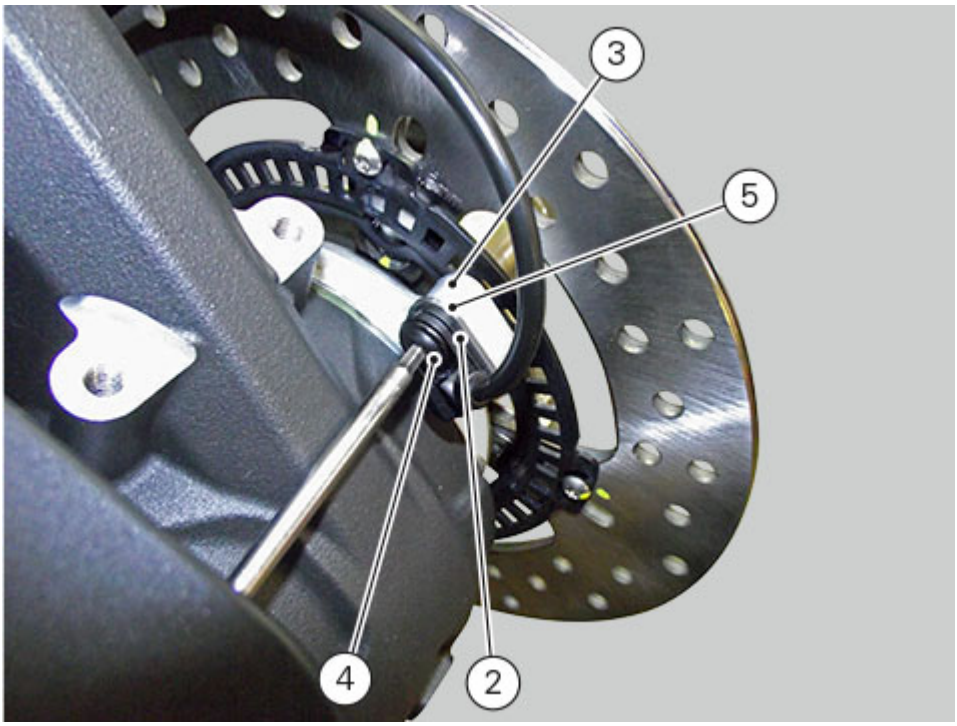

Connect connector (1) to main wiring.
Fasten all clips retaining rear ABS sensor cable (2): refer to tables under Section "Routing wiring harnesses / hoses".

Refit the rider seat (Refitting the seat).

Changing the front phonic wheel sensor

Disconnect front ABS sensor (1) connector (A) from main wiring.

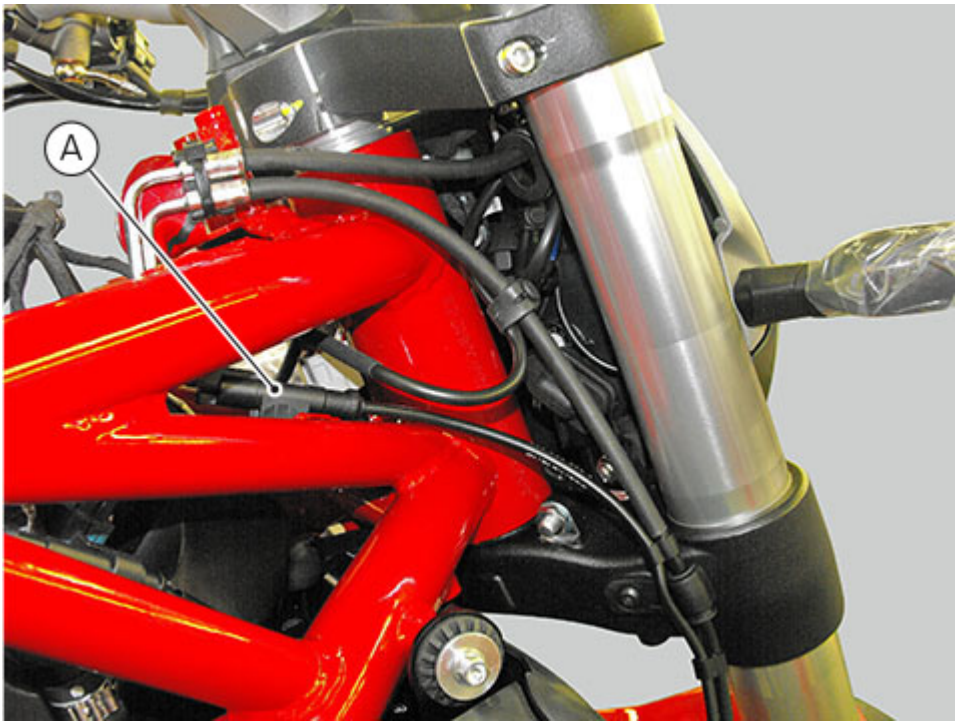

Open all clips retaining front ABS sensor cable (1): refer to tables under Section: "Routing wiring harnesses / hoses". Undo the retaining screw (2), and remove front ABS sensor (1) with calibrated gasket (3), sliding cable (4) out from cable grommet.

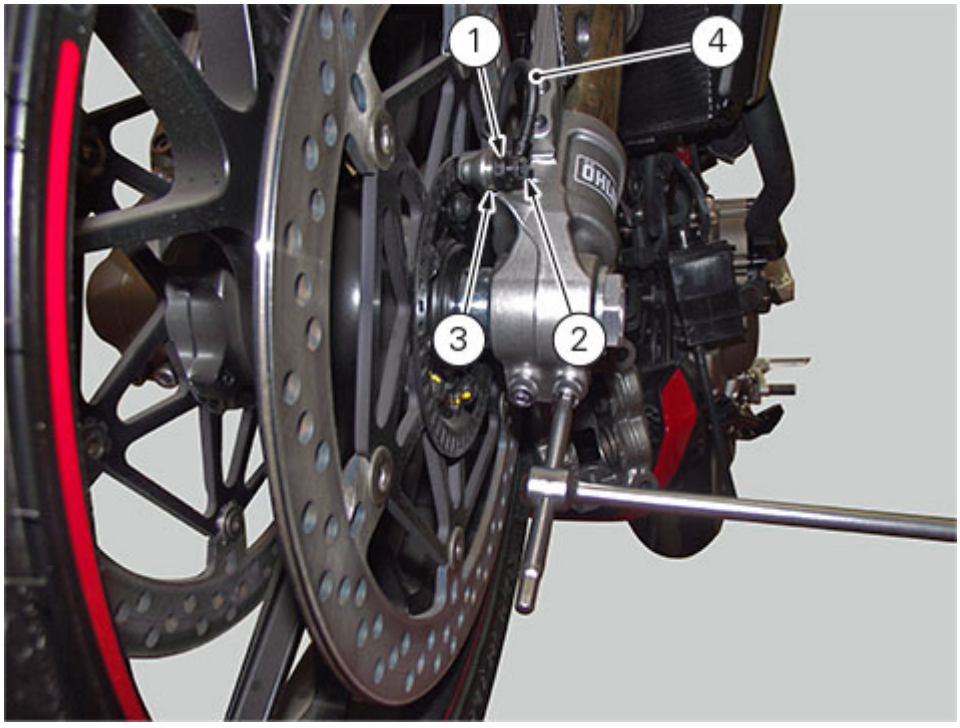

If necessary, release cable (4) from cable ring (6) on LH fork axle lug, loosening the two screws (5).

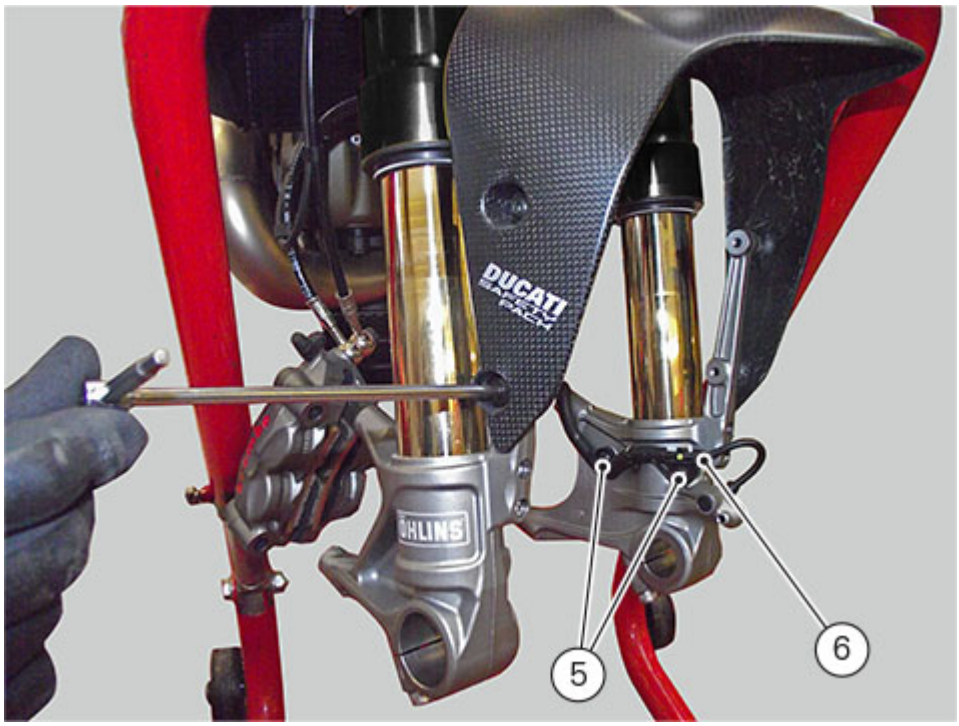

If necessary, release cable (4) from cable ring (8), loosening screw (7).

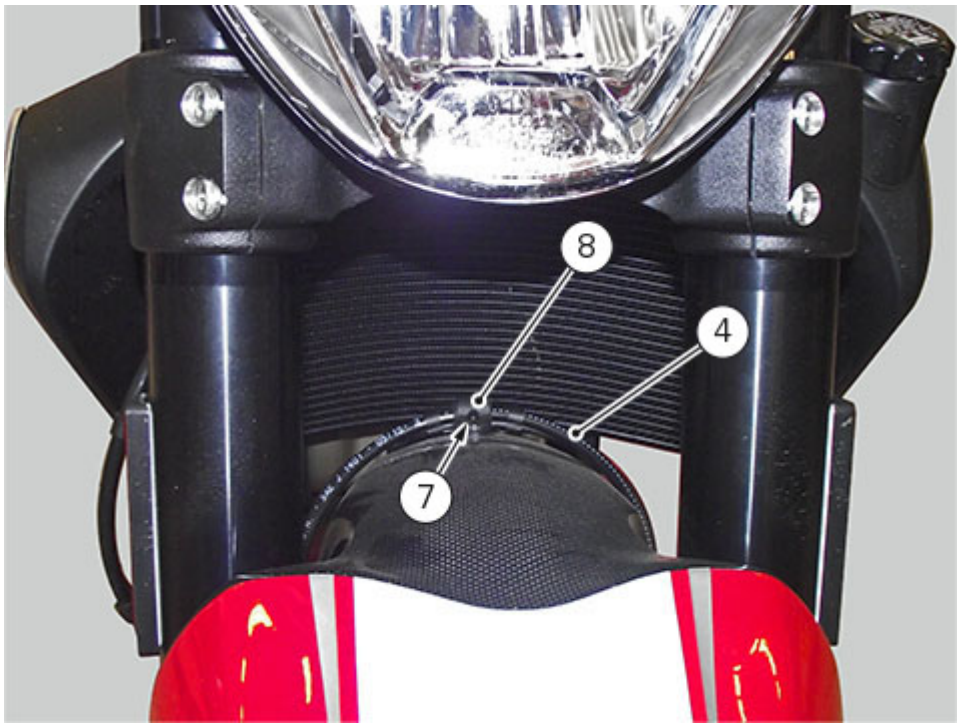

Before refitting, make sure that contact parts between front ABS sensor (1) and its seat are free of damage and perfectly clean. Fit the new front ABS sensor (1) on its seat inserting the screw (2).
Check air gap between front ABS sensor (1) and front phonic wheel (5) as explained under Section "Adjusting the AIR-GAP of phonic wheel sensor.".
Tighten the screw (2) to a torque of 10Nm ± 10%.

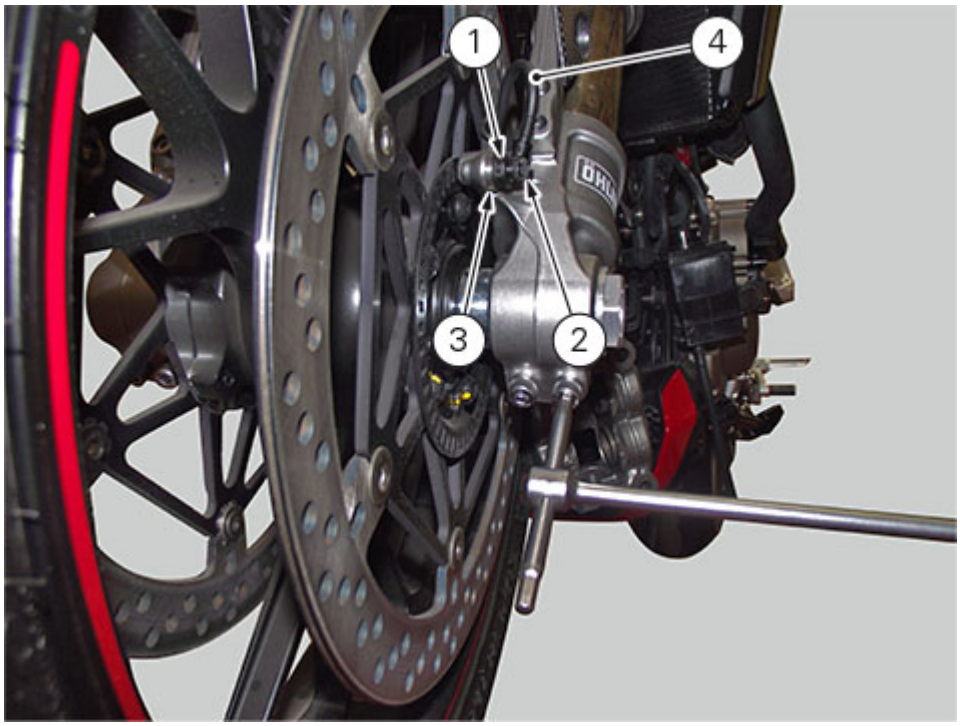

Connect the connector (A) to main wiring.
Fasten all clips retaining front ABS sensor cable (1): refer to tables under Section "Routing wiring harnesses / hoses".

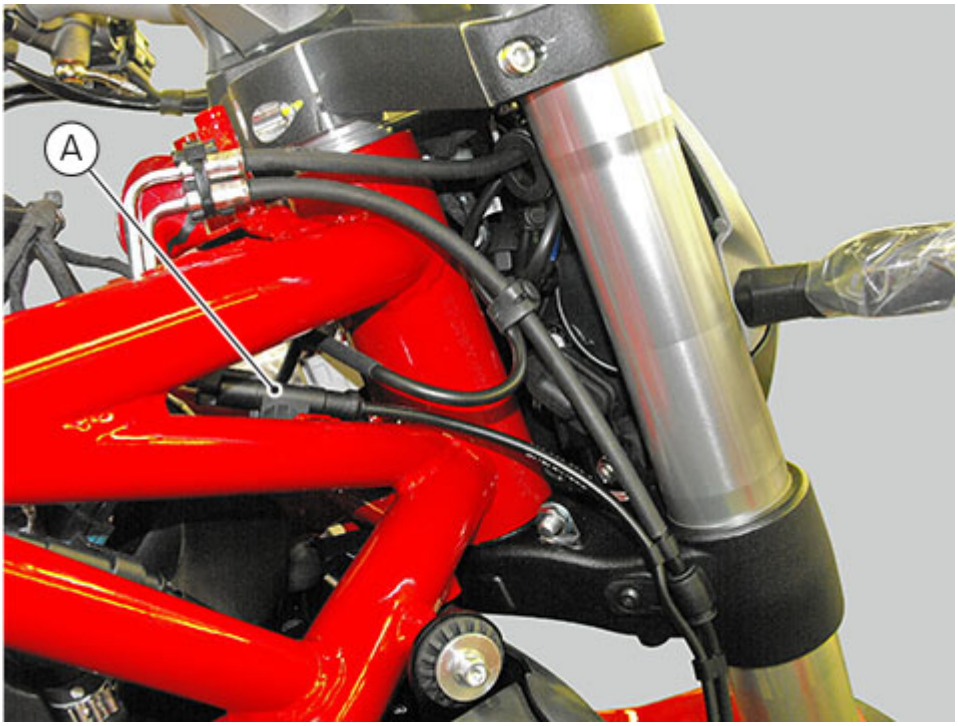

Bleeding of the ABS hydraulic system

If brake controls feel "spongy" due to the presence of air bubbles in the system, bleed as usual, as described in sections "Changing the front brake system fluid" and "Changing the rear brake system fluid".
Before bleeding a brake master cylinder, move back the calliper pistons as indicated in (Changing the fluid in the front brake system,Changing the fluid in the rear brake system) to let any air build-up in the ABS control unit flow into the master cylinder.
Purge must be carried out by means of the corresponding unions (A) placed on the callipers and the brake master cylinders.

Important
Do not undo the special screws securing the pipe unions on the ABS hydraulic control unit, unless control unit replacement is necessary.

Important
If the ABS hydraulic control unit has been replaced, it will be supplied with the secondary circuit already filled with fluid. Control unit must thus be assembled and the system filled and drained as a traditional system.





Adjusting the AIR-GAP of phonic wheel sensor

(For front as well as rear sensor) In each case of maintenance that foresees:
- replacing or refitting the wheel;
- replacing or refitting phonic wheel (5) or (6);
- replacing or refitting the brake discs;
- replacing or refitting the speed sensor (1) or (2);
- (front) replacing or refitting the sensor holder bracket;
- (rear) replacing or refitting of the calliper holder plate.

It is necessary to check the air-gap between the speed sensor and the phonic wheel, once the components are refitted.
The AIR-GAP value must be (1.3÷1.9) mm.
For this purpose, use a feeler gauge to check the air-gap; then, carry out 4 measures of the air-gap, one every 90° of wheel turn.

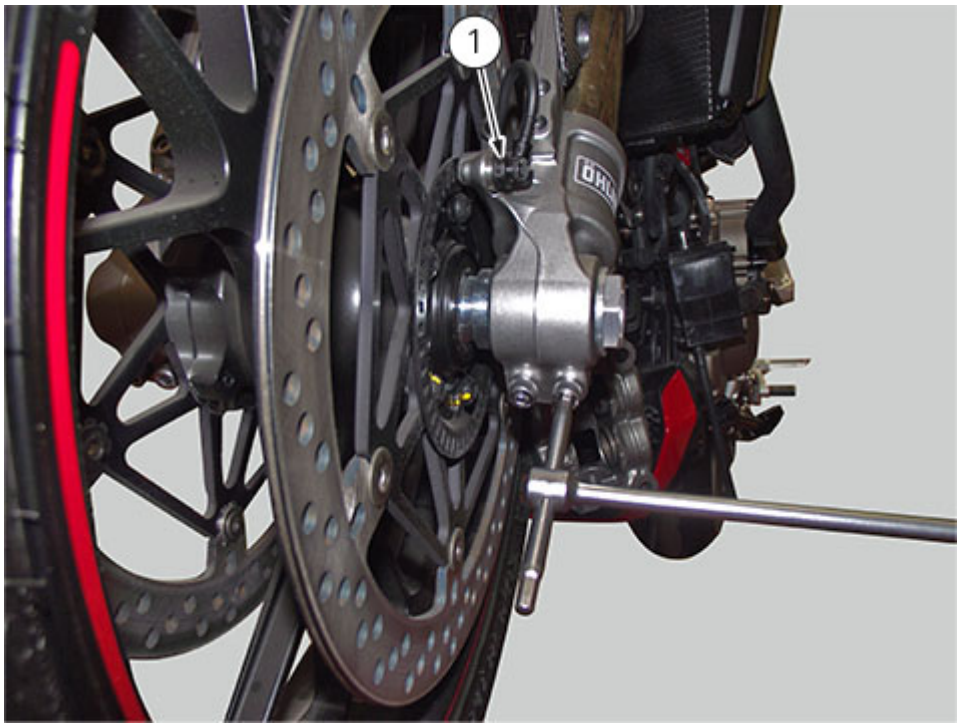

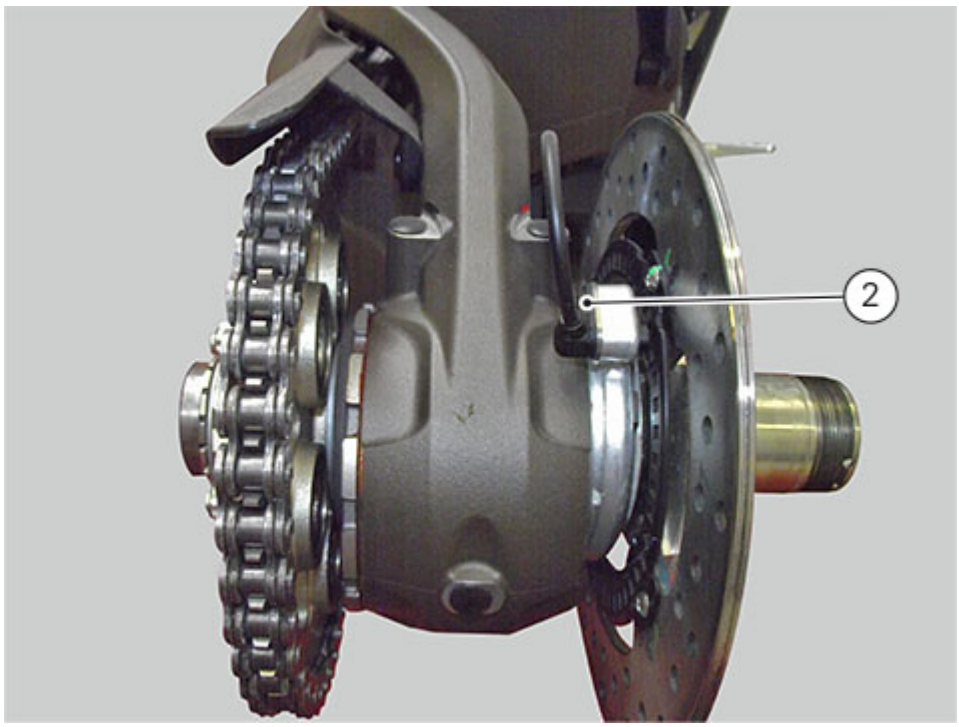

If the difference between the minimum and maximum values measured is higher than 0.40 mm, replace the phonic wheel.
Once checked that the difference is lower than or equal to 0.40 mm, carry out the shimming of the speed sensor (1) or (2) by means of calibrated shims (B).



Phonic wheels cleaning

It is important to check that both phonic wheels (5) and (6) are always clean.
Otherwise, gently remove any possible dirt deposits with a cloth or metal brush.
Avoid using solvents, abrasives and aiming air or water jets directly on the phonic wheel (5) or (6).

Refitting the throttle control

Lubricate the handlebar on the handgrip seat with the specified product.
Position throttle control (2) on handlebar.
Tighten screws (1) to the recommended torque of 4.5Nm±0.5, following a 1-2-1 sequence and starting from upper screw.

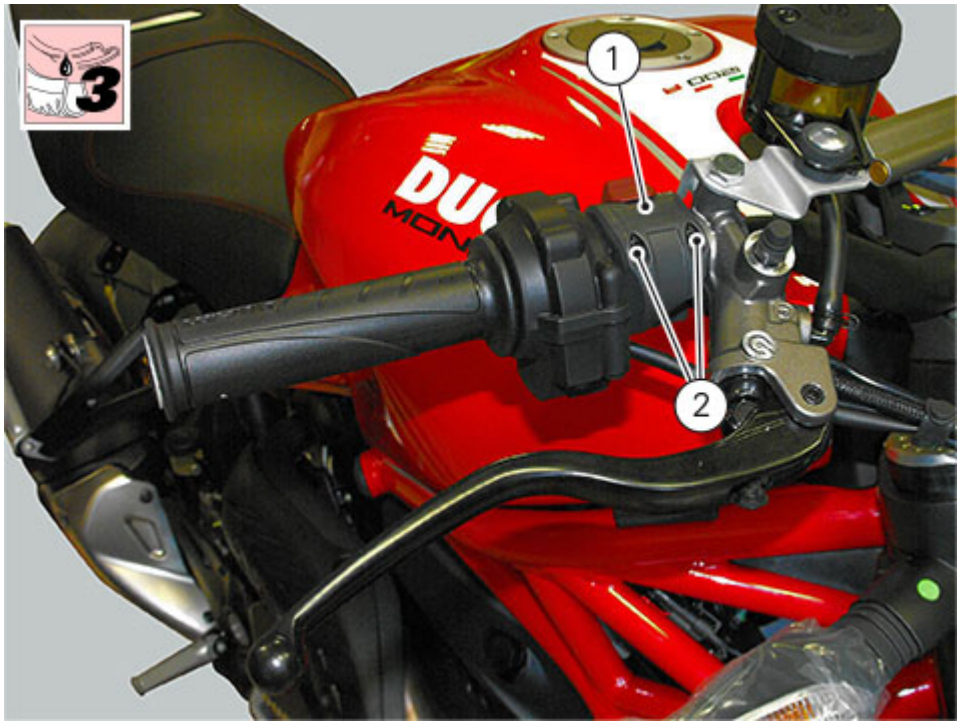

Throttle control and handgrip positions are mandatory: pin (A) must be inserted inside handlebar hole (B).

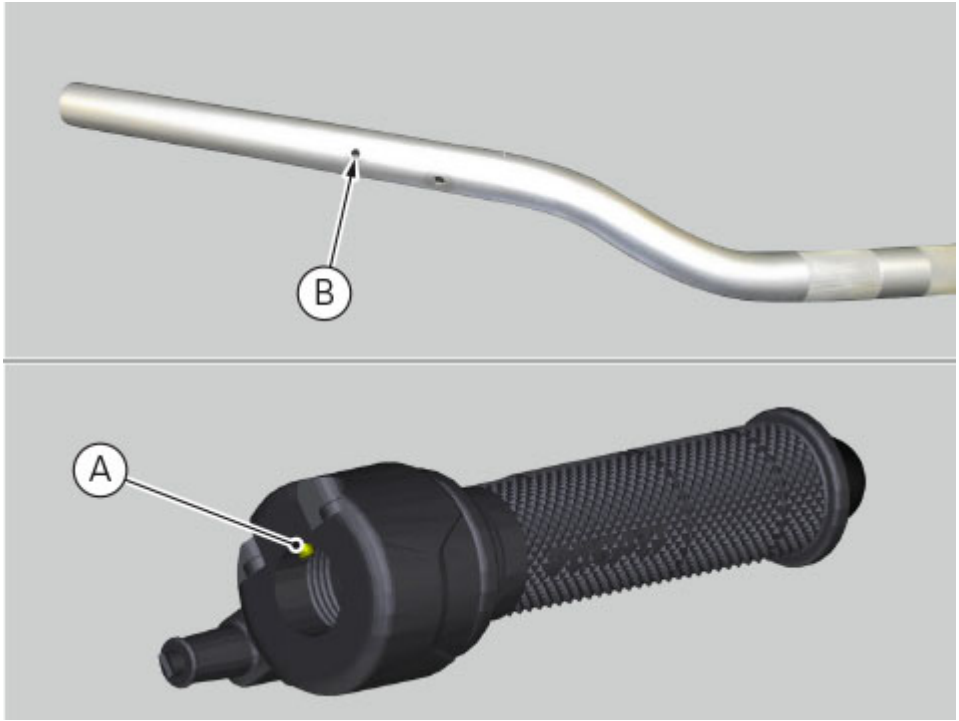

Duly route throttle control wiring, as described in "Routing wiring on frame" and, once connector (3) is duly connected, insert it inside the special tab on steering tube back side (central position).



Pre-assemble bushes (7) and (6), together with counterweight (5), on screw (4).
Then insert the pre-assembled unit inside handlebar, and tighten screw (4) to a torque of 10Nm±10%.

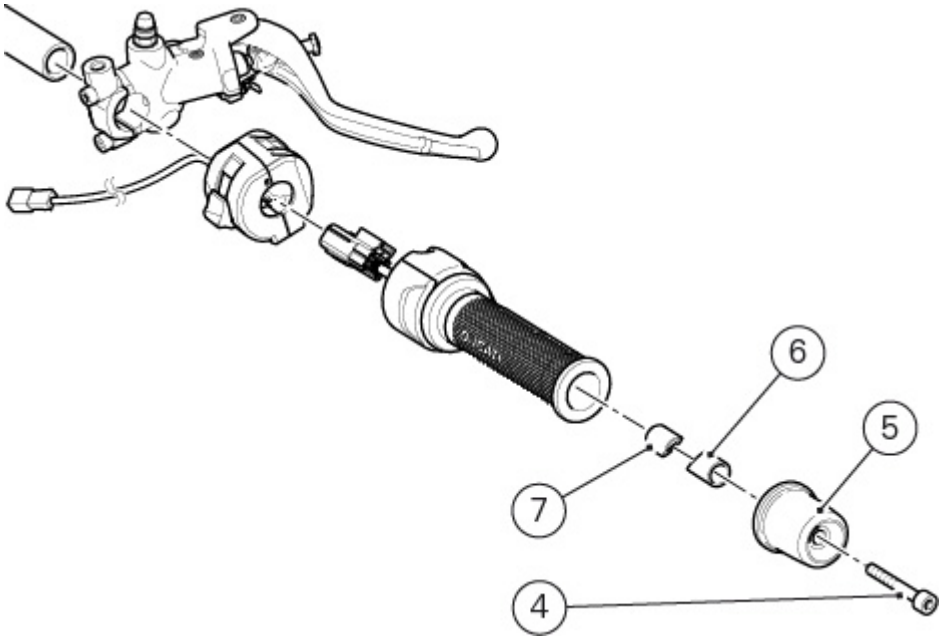

Refit the RH rear-view mirror (Refitting the rear-view mirrors).

Note
The APS values for the "fully-closed" position stored inside the ECU do not need to be reset.

Removing the throttle control

Remove the RH rear-view mirror (Removing the rear-view mirrors).

Loosen screw (4) and slide the counterweight fastening unit out of handlebar.
Then disassemble unit by fully loosening screw (4) and removing counterweight (5) and bushes (6) and (7).

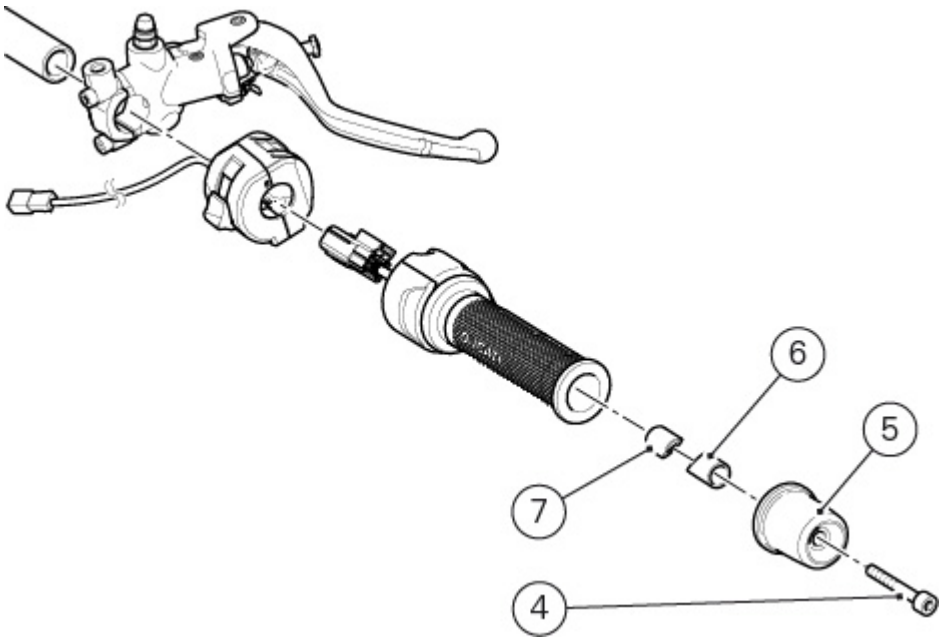

Loosen screws (1), and remove the handgrip and throttle control (2).

Note
Do not remove screws so as not to affect throttle control operation.

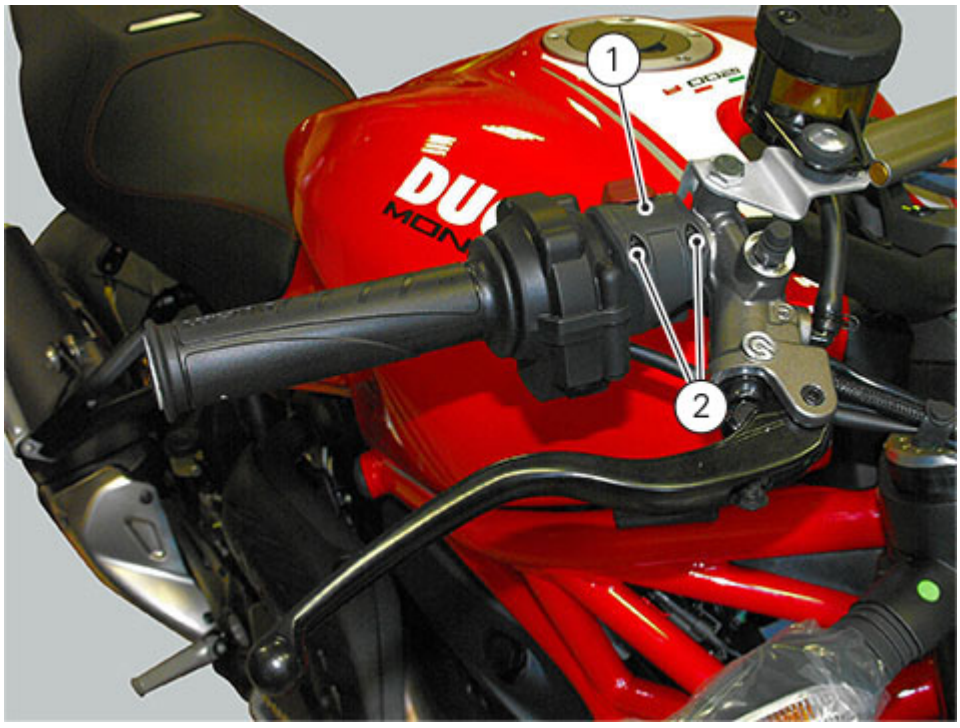

Disconnect throttle connector (3), which is located behind steering tube, in central position.
To make removal easier, after having released it from retainer on steering tube, slide it out from vehicle right side.

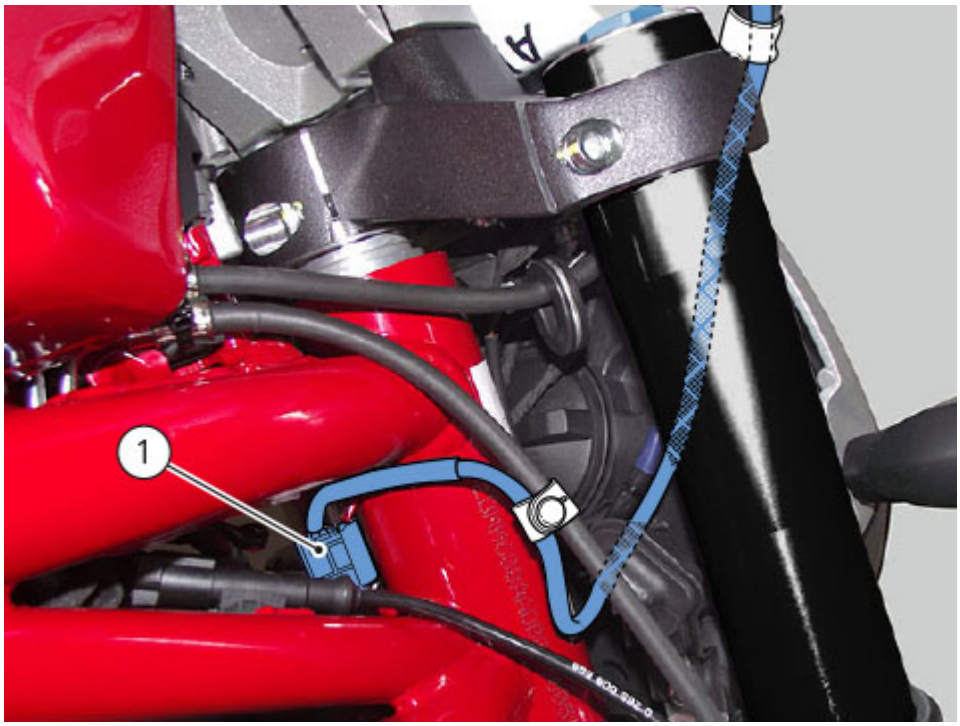

Slide out throttle control.

Refitting the handlebar

Apply the specified product to the underside of the screws (9).
Insert the screws (9) on the stud bolt (10).
Apply the recommended threadlocker on the thread in view of screws (9).
Fit stud bolt (10) by starting screws (9).
Tighten the screws (9) to a torque of 45Nm±5%, following a 1-2-1 sequence.

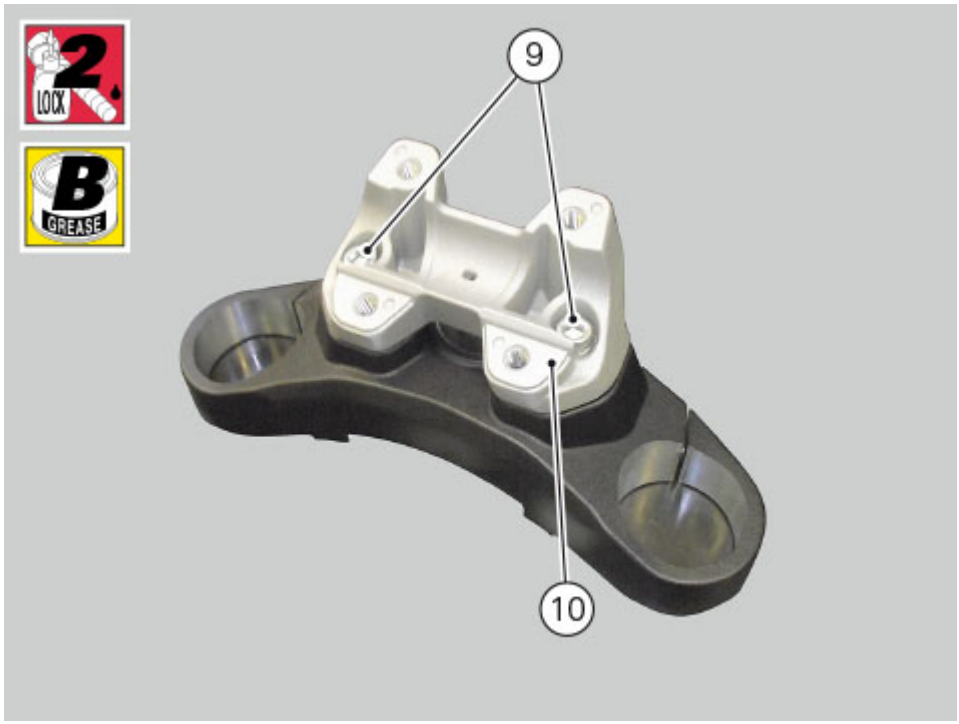

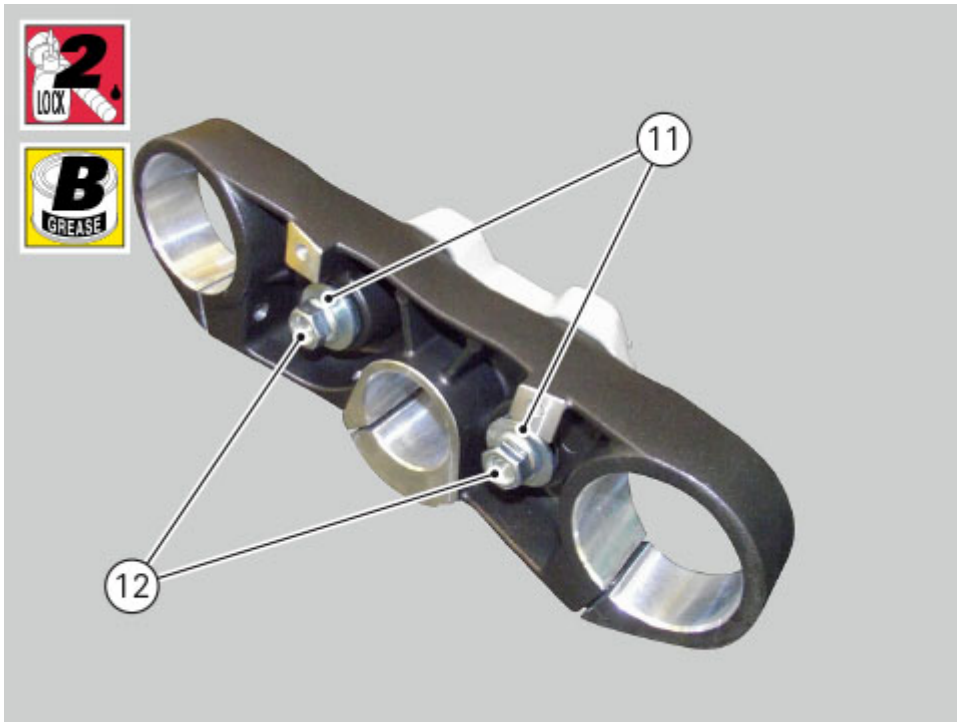

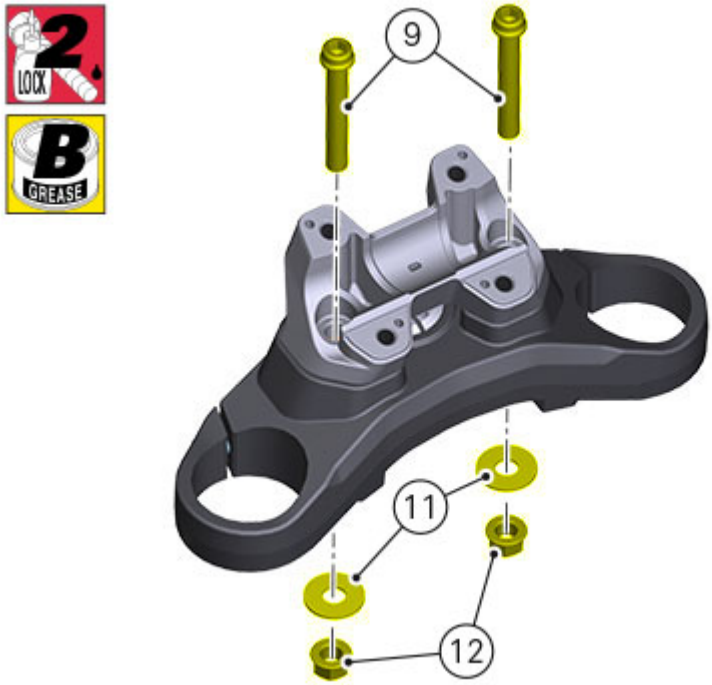

Position handlebar (8) in its seat on the stud bolt (10).
Reference points (A) on handlebar must be at the same distance from stud bolt (10) and flush with the stud bolt surface.

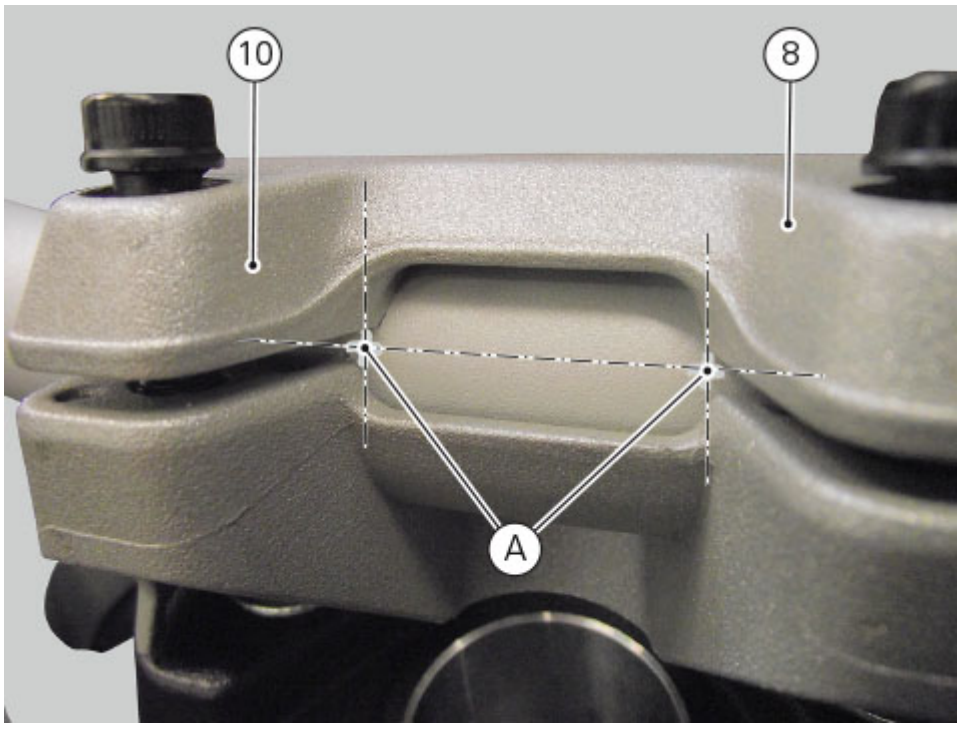

Apply the specified product to screws (6).
Refit the U-bolt (7) and insert the screws (6).
Tighten screws (6) to a torque of 25Nm±5%, following a 1–2–3–4–3 sequence.

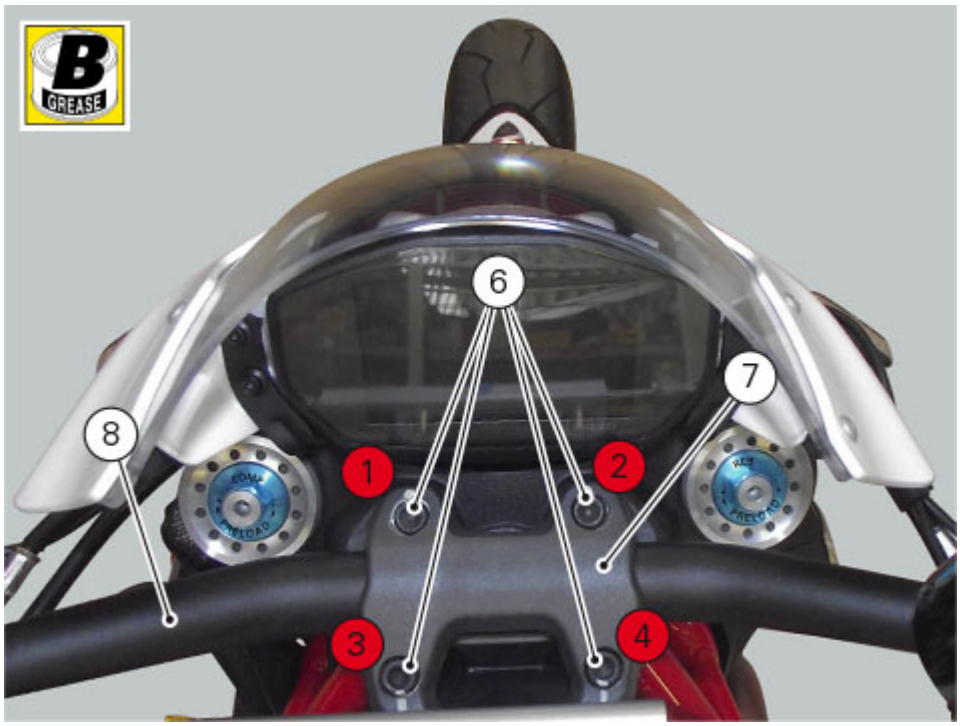

Refitting the handgrips

Working on the right side refit the throttle control (Refitting the throttle control)
Working on the left side of handlebar, lubricate it on left handgrip seat (5) with the specified lubricant, and fit it on handlebar.

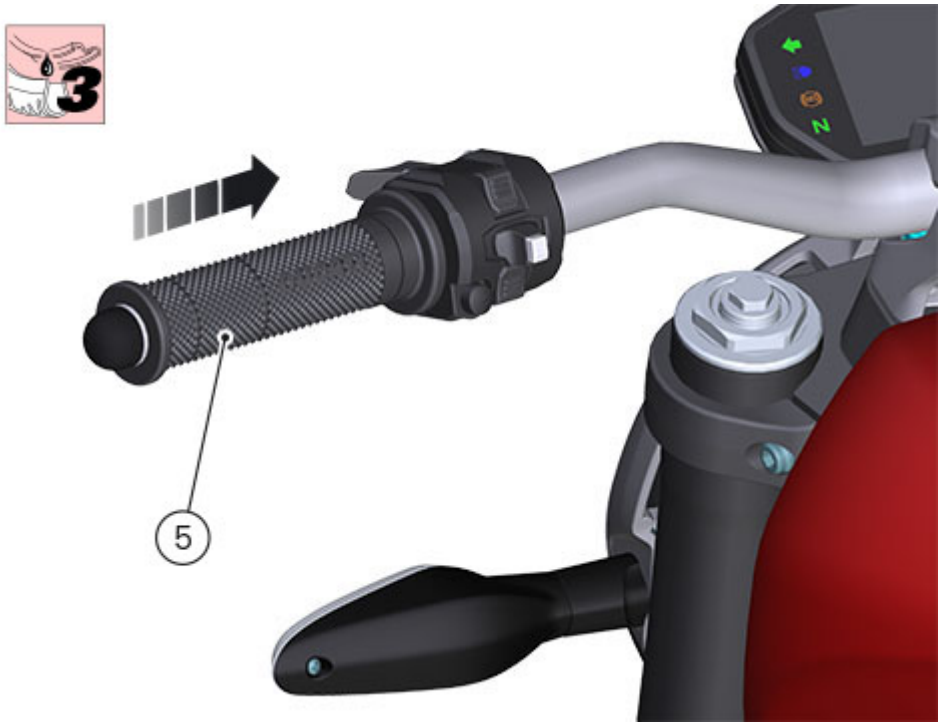

Pre-assemble bushes (17) and (18), together with left-hand counterweight (16), on screw (15).
Then insert the pre-assembled unit inside handlebar (left side) and tighten screw (15) to a torque of 10Nm±10%.

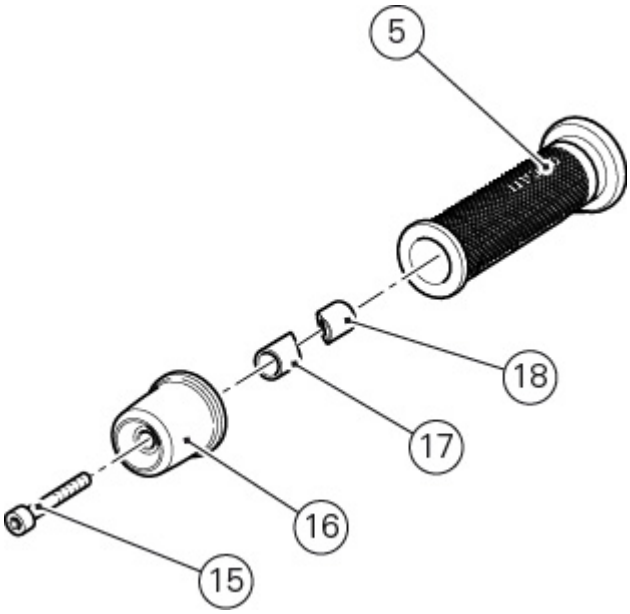

Left-hand switch position is mandatory: pin (C) must be inserted inside handlebar hole (D).

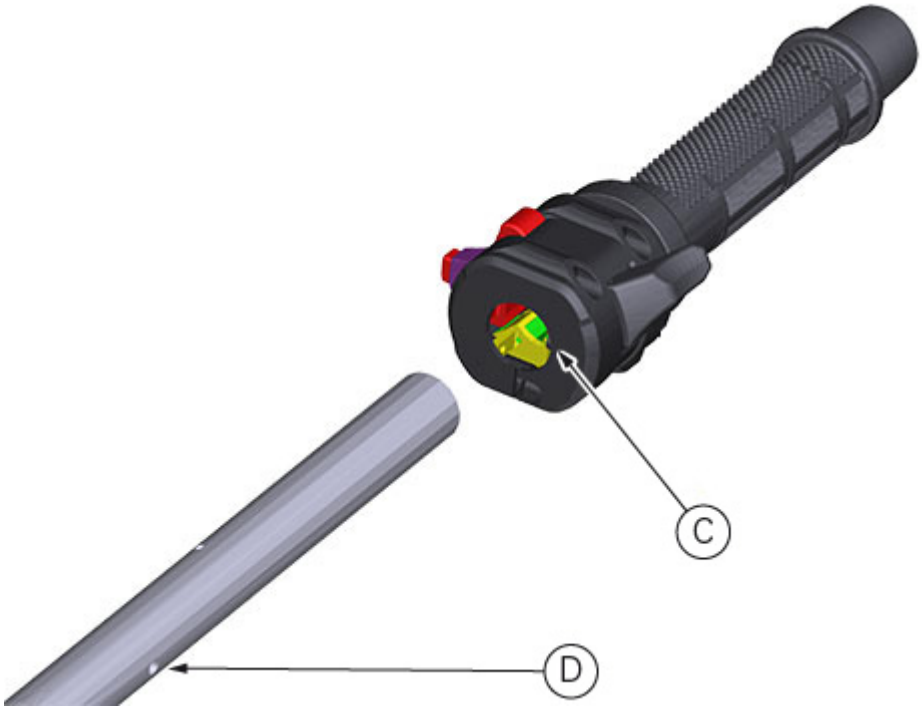

Fit left-hand switch (3) and tighten screws (4) to a torque of 1.3Nm ± 10%, starting from the upper screws and ending with the lower ones.

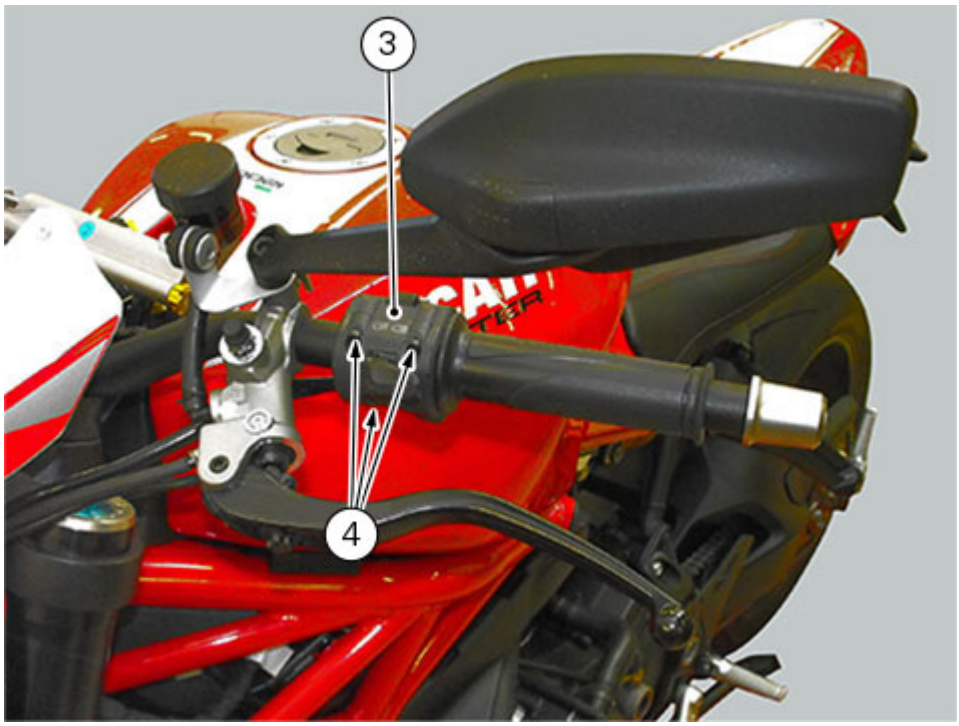

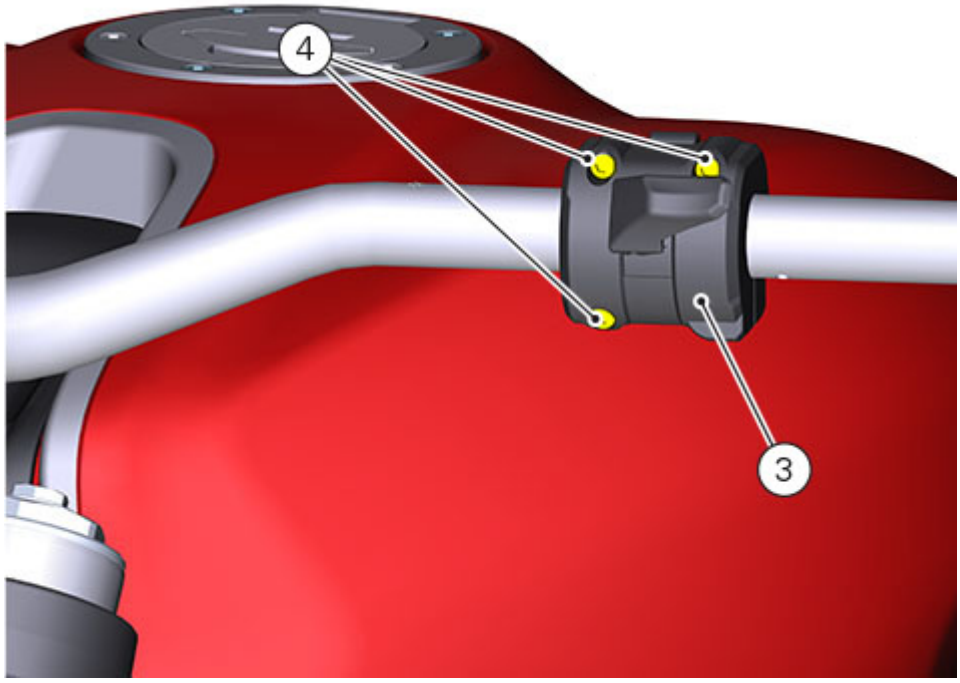

If removed, refit the clutch master cylinder assembly (Refitting the clutch master cylinder assembly)

Refit the right-hand switch (1) and tighten screws (2) to a torque of 1.3Nm±10%, starting from the upper screws and ending with the lower ones.



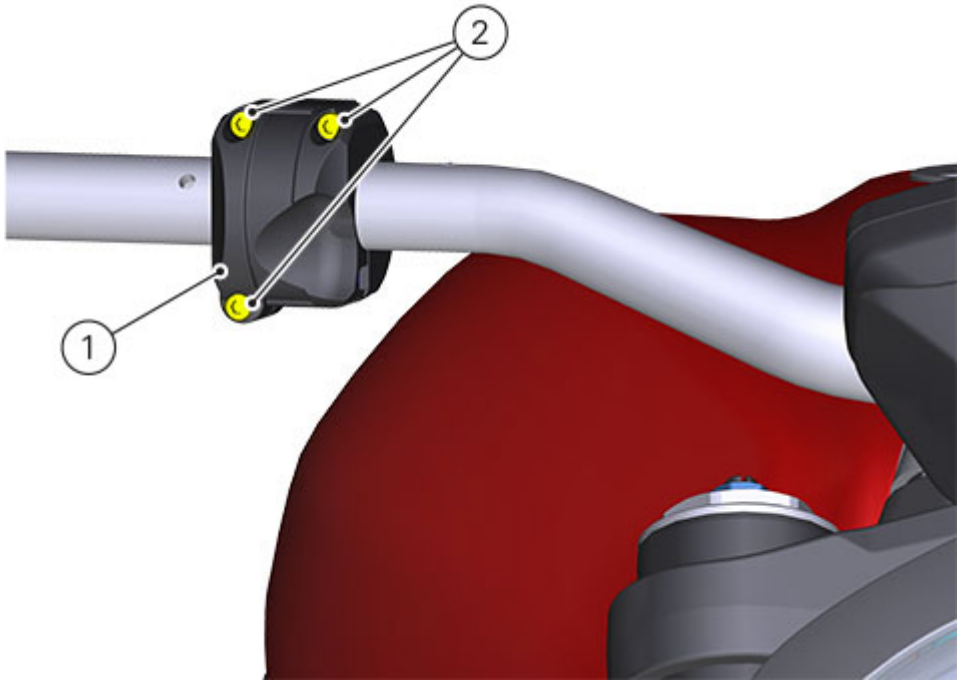

Take special care when fitting switch.
Switch position is mandatory: pin (A) must be inserted inside handlebar hole (B).

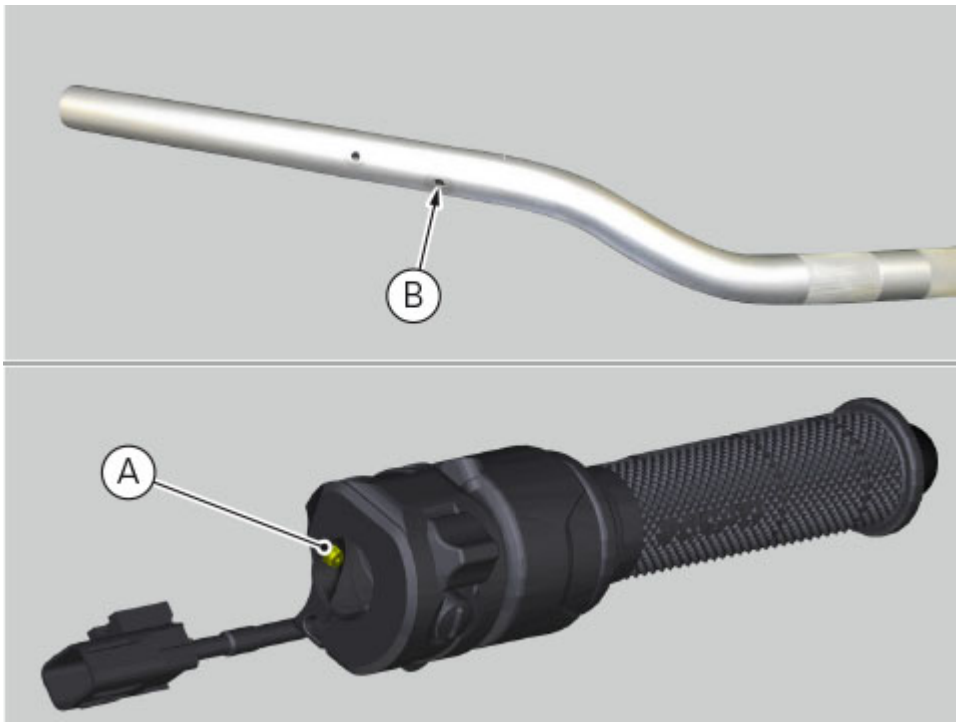

Connect right-hand switch connector (13) and left-hand switch connector (14).

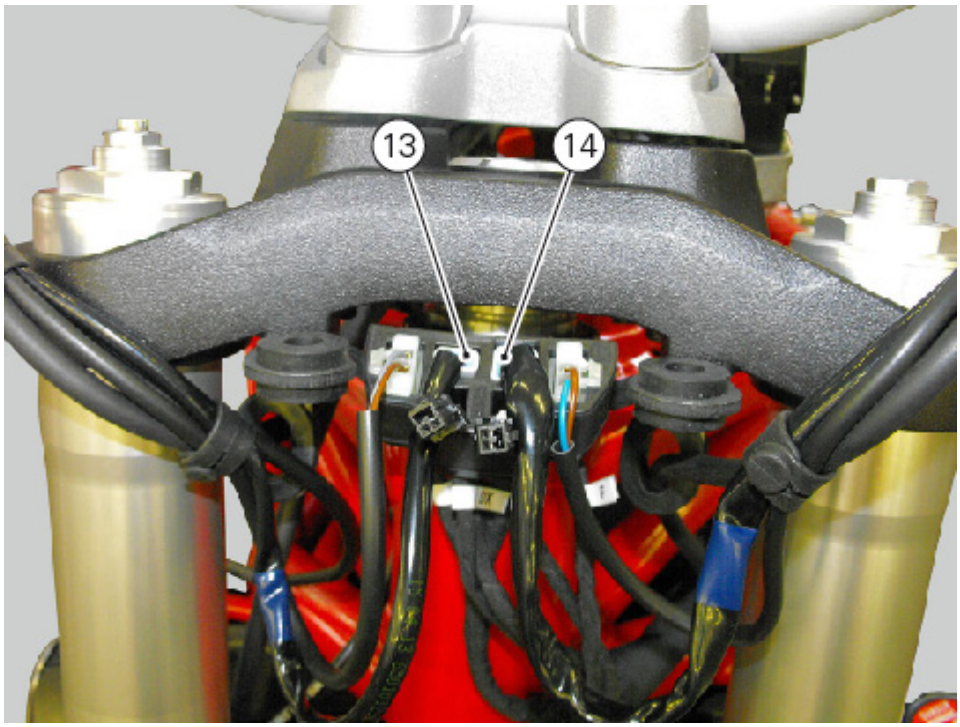

Refit the front hydraulic brake master cylinder (Refitting the front hydraulic brake master cylinder).
Refit the clutch master cylinder assembly (Refitting the clutch master cylinder assembly).
Refit the rear-view mirrors (Refitting the rear-view mirrors).
Fit ties and rearrange front wirings and headlight (Refitting the light assembly).

Removing the handlebar

Remove the rear-view mirrors (Removing the rear-view mirrors).
Release the headlight (Removing the light assembly).
Remove the throttle control (Removing the throttle control).
Remove the front brake master cylinder (Removing the front brake master cylinder).
Remove the clutch control (Removing the clutch master cylinder assembly).
Disconnect right-hand switch connector (13) and left-hand switch connector (14).

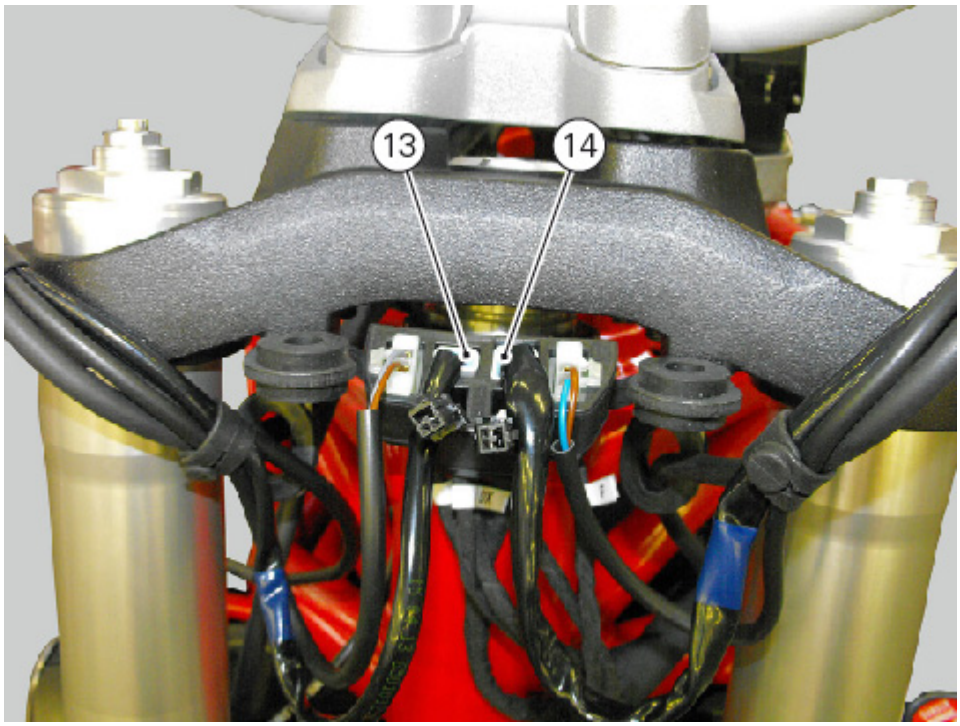

Undo the screws (2), and remove right-hand switch connector (1).

Note
Do not remove screws so as not to affect switch operation.



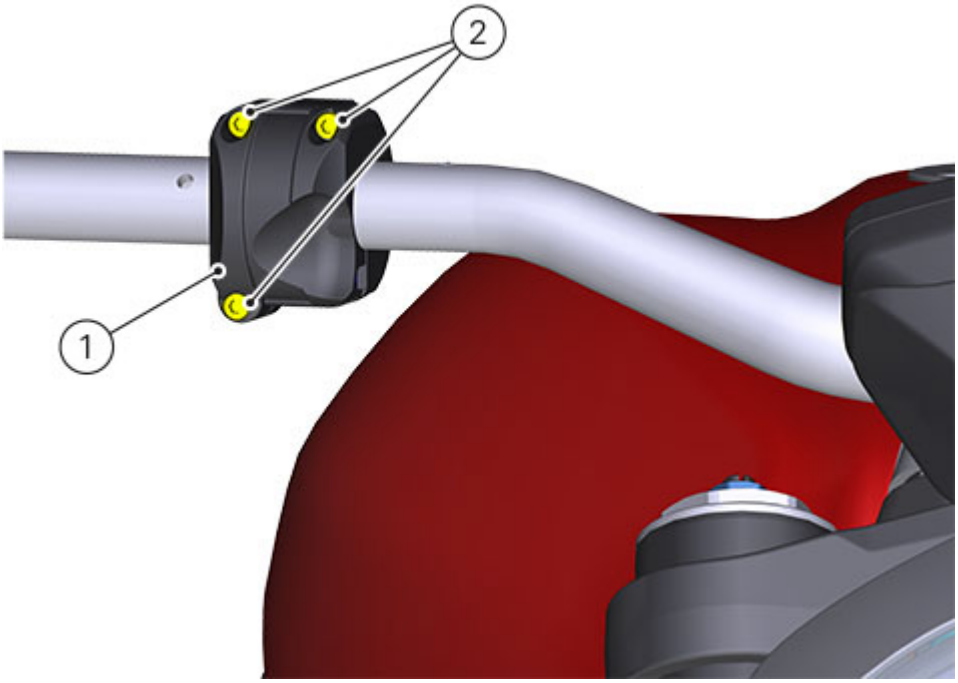

Undo the screws (4), and remove left-hand switch connector (3).

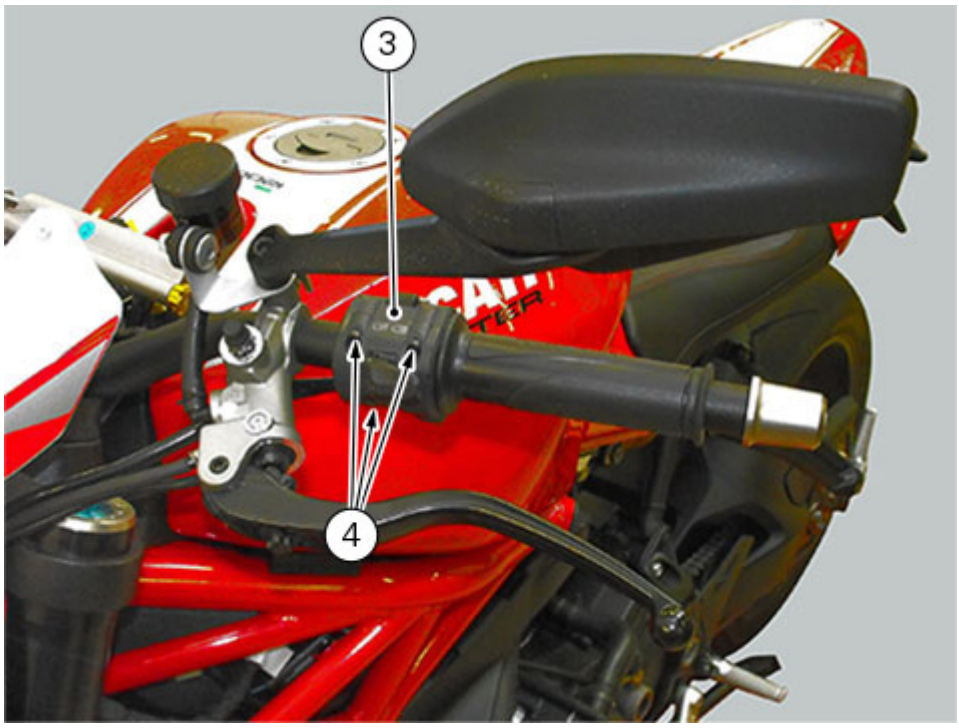

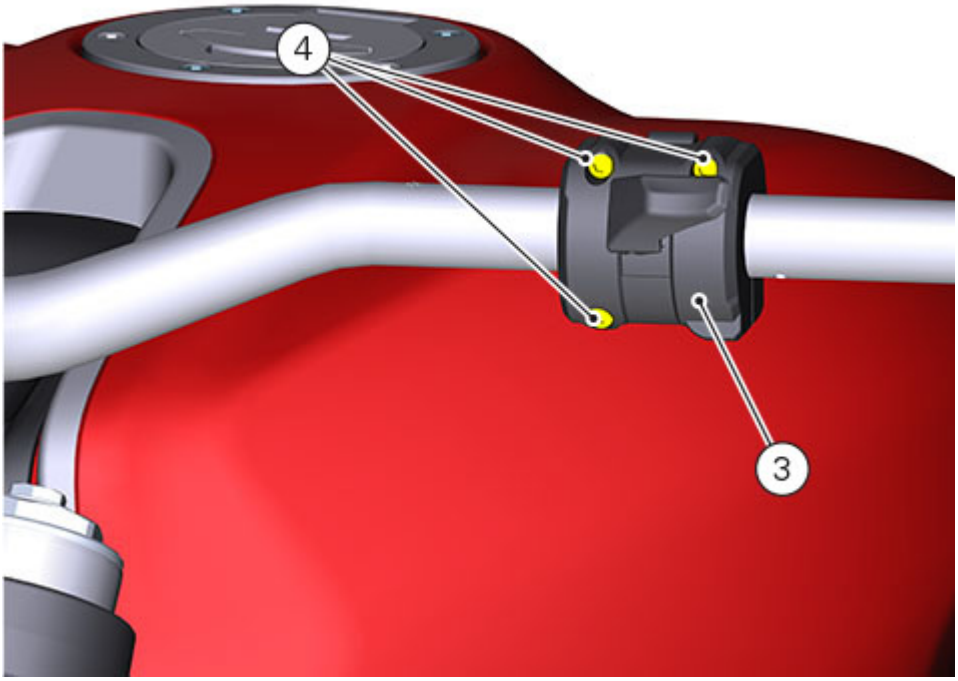

Removing the left handgrip

Loosen screw (15) and slide the counterweight fastening unit out of handlebar.
Then disassemble unit by fully loosening screw (15) and removing counterweight (16) and bushes (17) and (18).
Then slide out left handgrip (5) with the help of an air jet paying attention not to damage it.

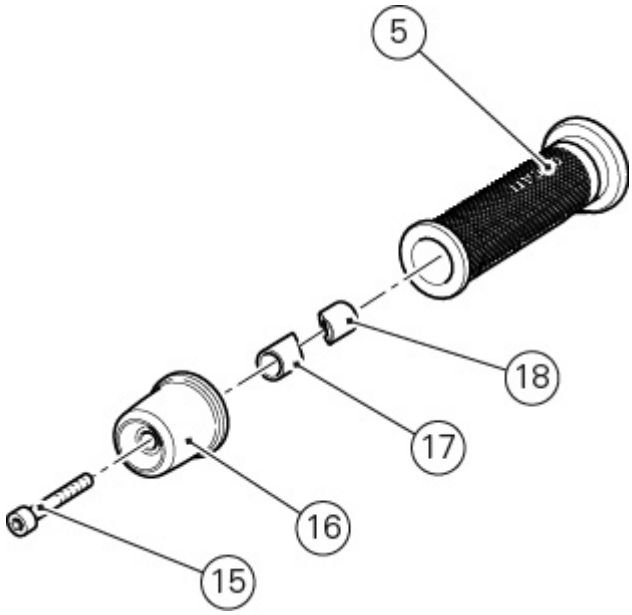

Undo and remove the screws (6).
Remove U-bolt (7) securing the handlebar.
Remove the handlebar (8).

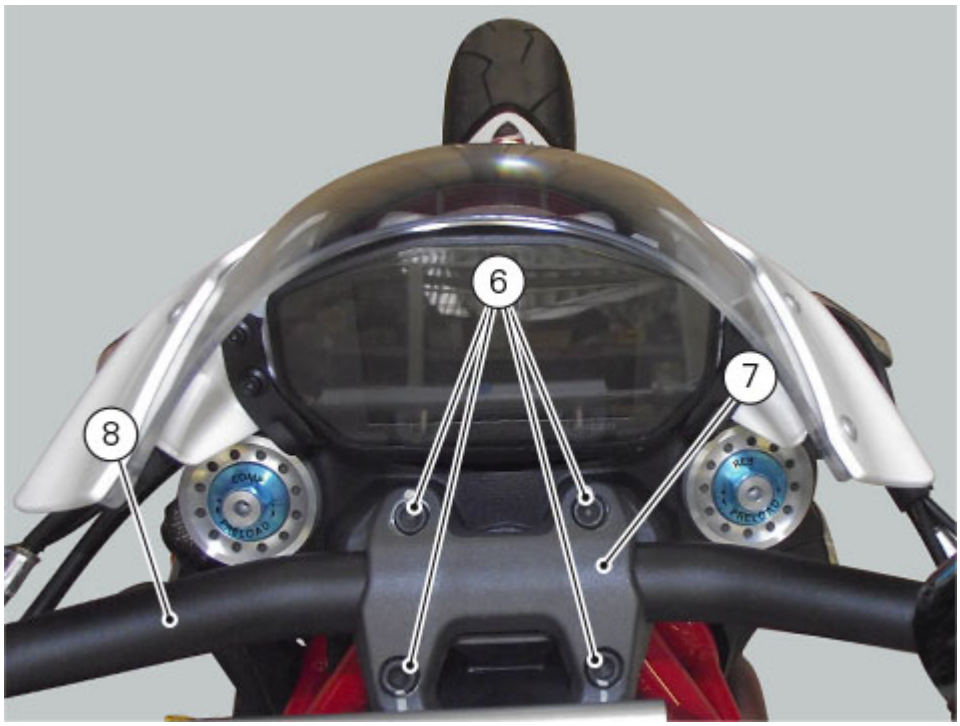

Remove the steering head (Removing the steering tube components)
Undo screws (9) holding nut (12) and remove stud bolt (10) from the steering head.
Collect washers (11).

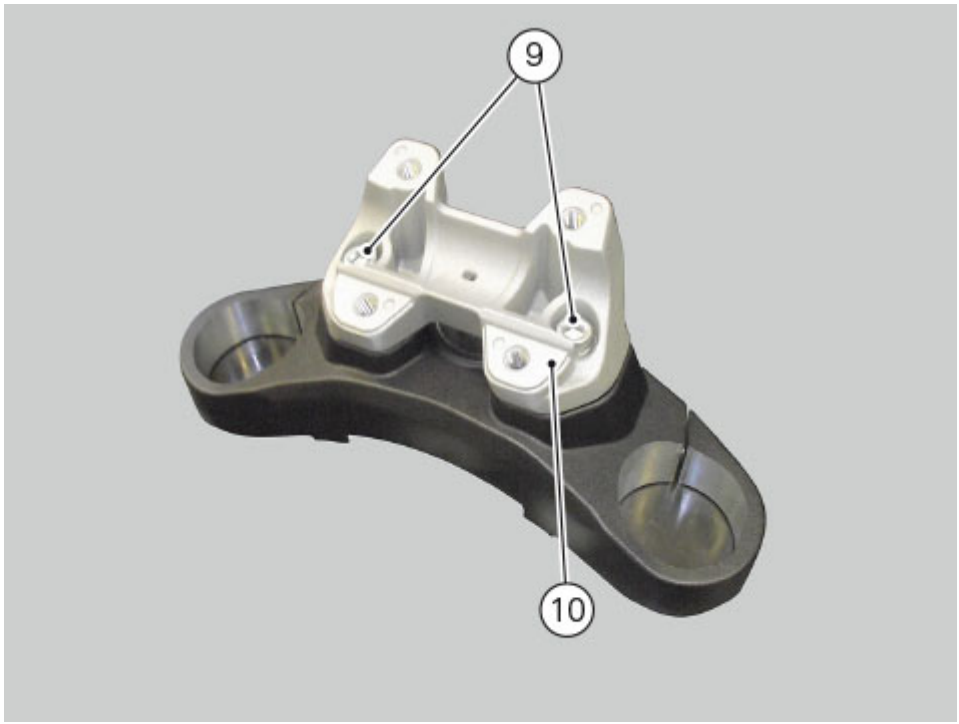

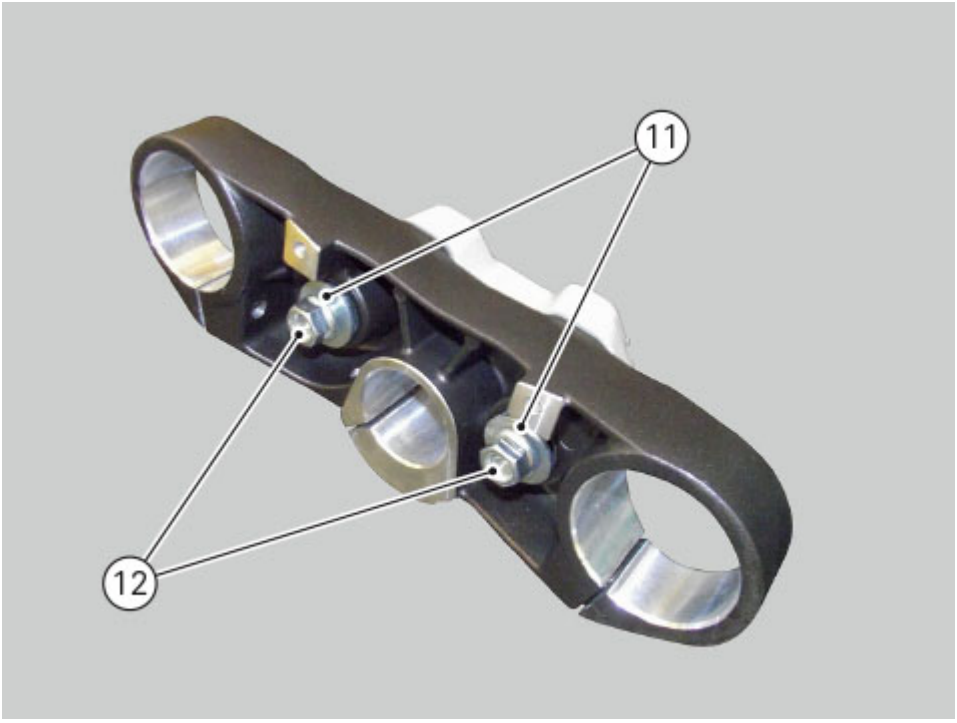
11
12

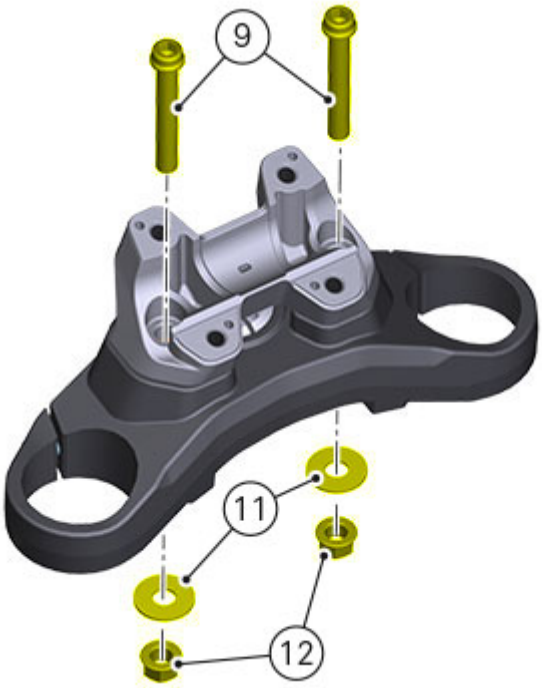
9
11
12

Refitting the clutch slave cylinder

Make sure the anti-rotation pin (7) is fitted on the clutch pushrod (6).

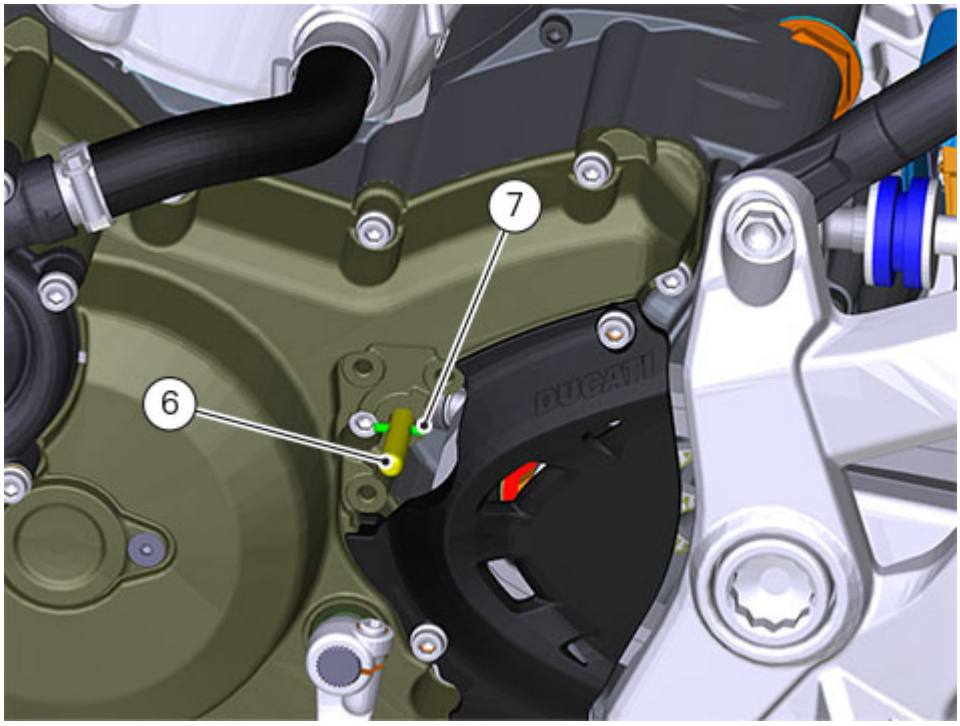

Fit the anti-rotation pin (7) in line with pins (B) on clutch-side casing, as shown in the figure.

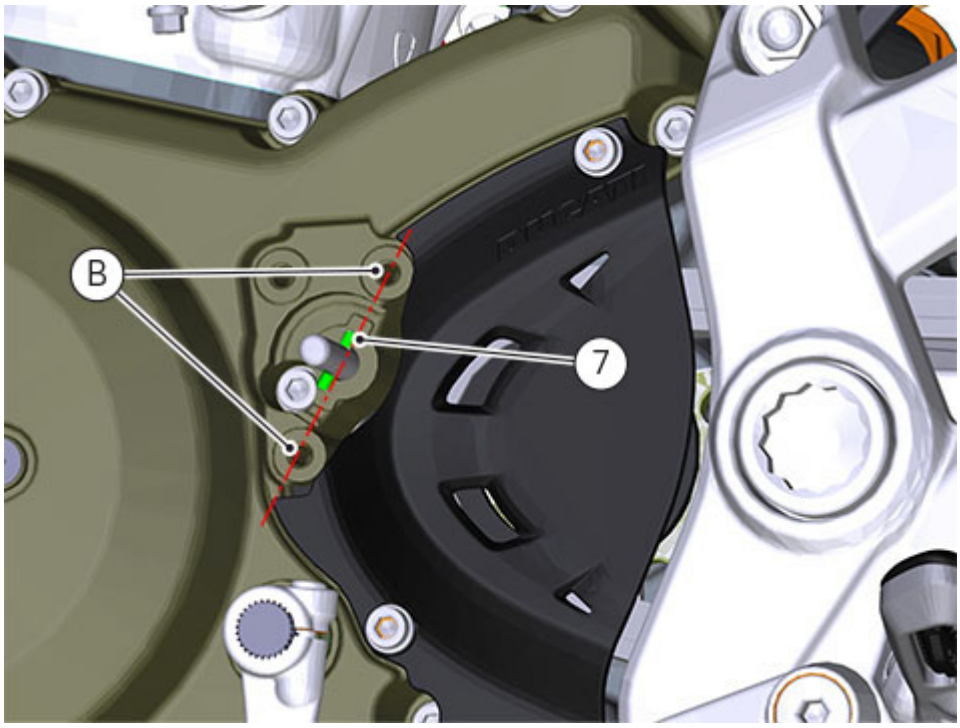

Fit seal (9) on anti-rotation insert (8).
Apply the specified product to seal (9).
Insert the anti-rotation insert (8) into clutch slave cylinder (1), making sure to match tab (C) on insert (8) with slot (D) on cylinder unit.

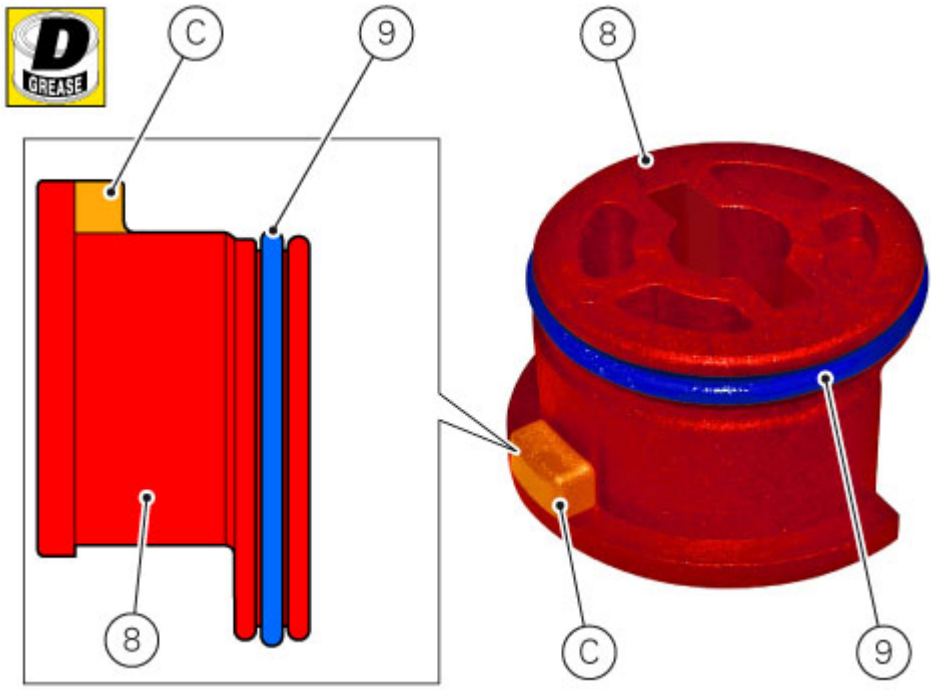
D
GREASE
C
9
8
8
C
9

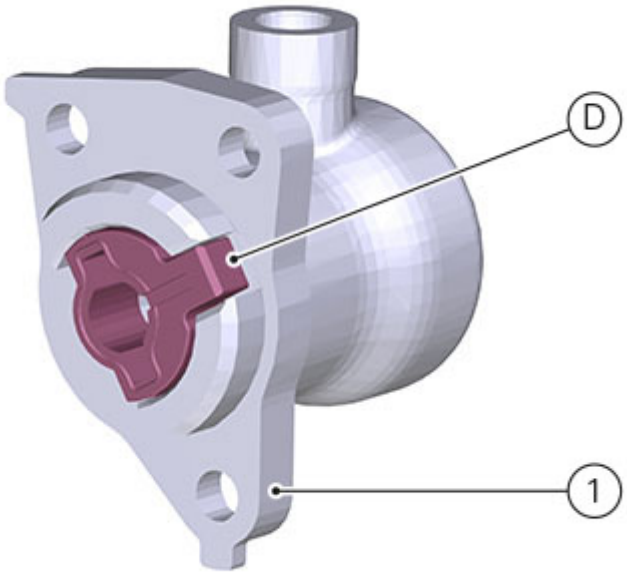
D
1

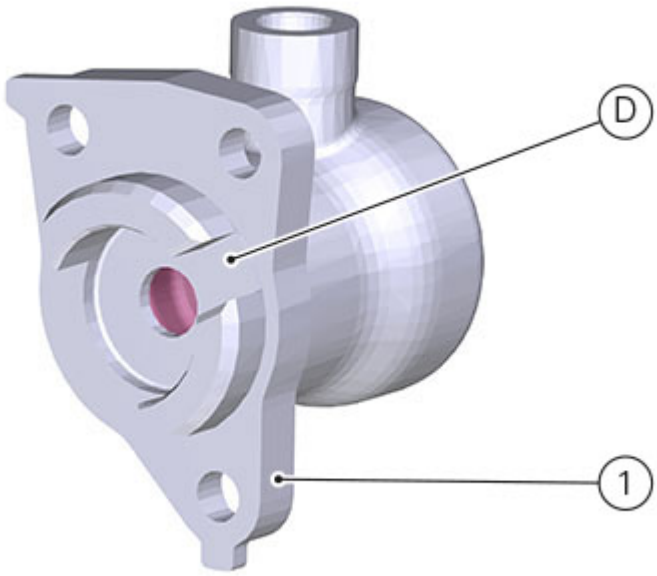

Insert clutch slave cylinder (1), including anti-rotation insert (8), on clutch pushrod (6) already positioned. The anti-rotation pin (7) must engage into the corresponding slots (E) on anti-rotation insert (8).

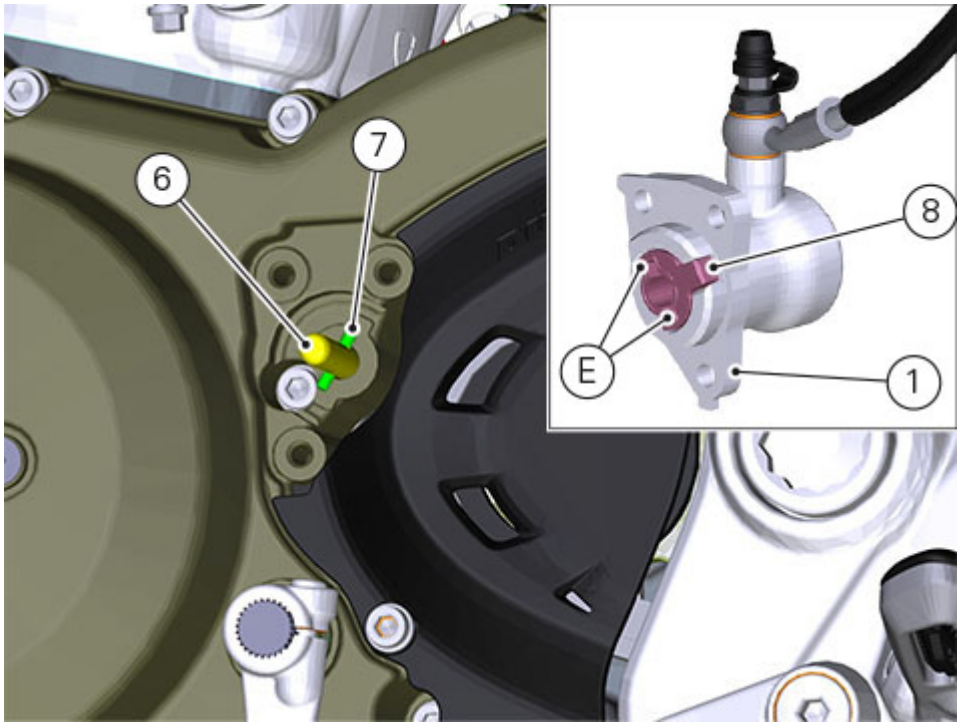

Fix the clutch slave cylinder (5) by starting the screws (4).

To bring the clutch slave cylinder (1) internal surface near the casing cover as evenly as possible, screw and tighten the screws (2) alternatively in steps.

Tighten screws (2) to a torque of 10Nm (Max. 12Nm ÷ Min. 9Nm), following a 1 - 2 - 3 - 1 sequence.

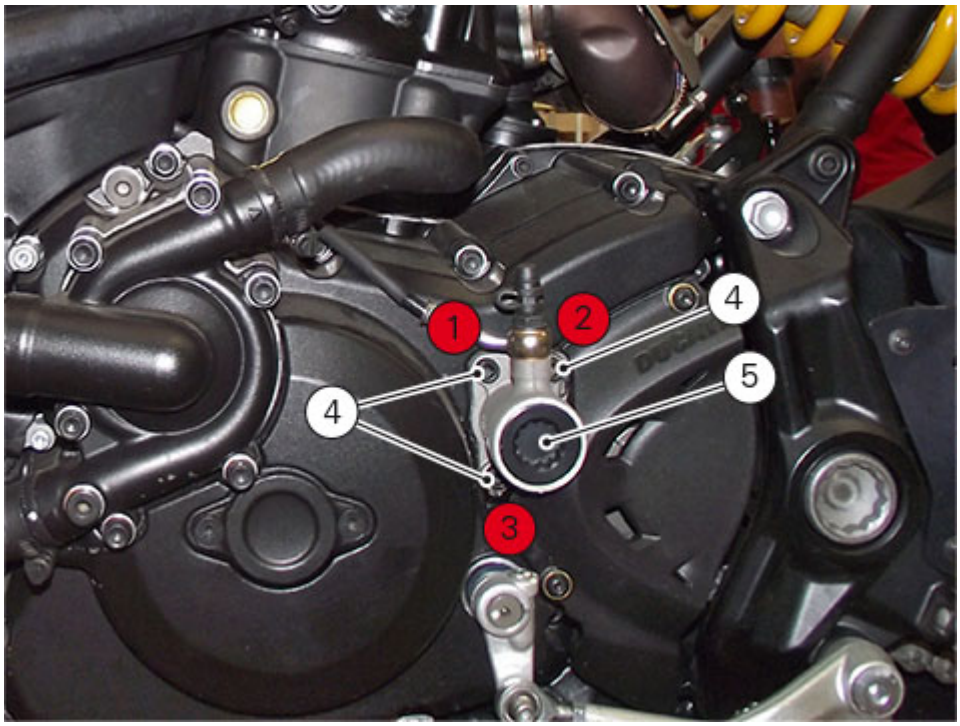

Fill the system (Filling the clutch hydraulic circuit).

Removing the clutch slave cylinder

Drain the clutch system (Draining the clutch system circuit).
Undo the screws (2) and slide out the clutch slave cylinder (1).

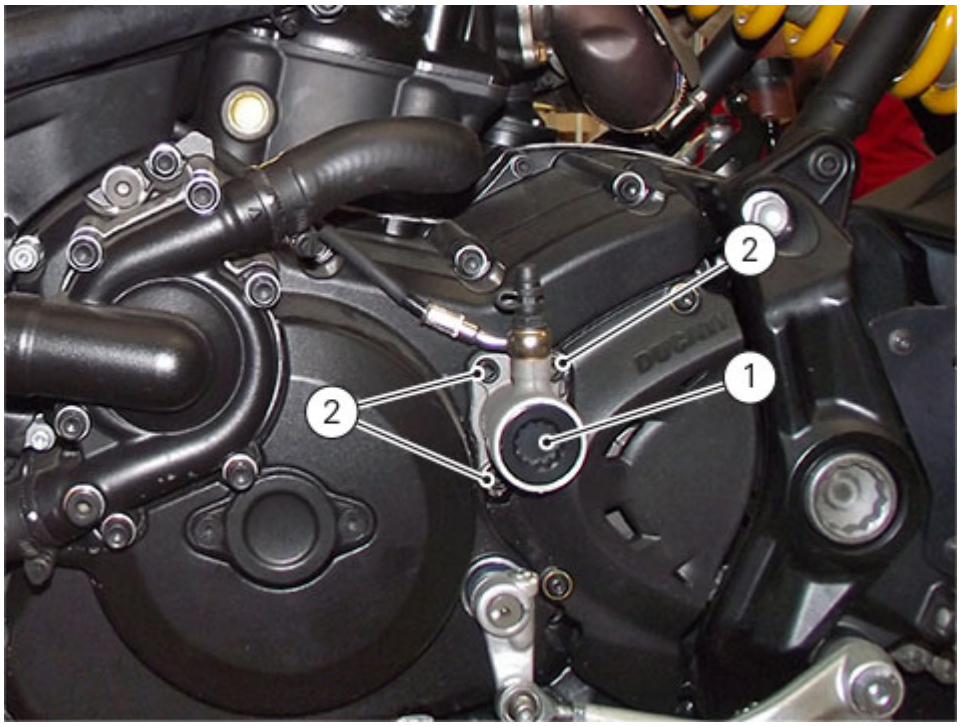

Remove dust seal cap (3) and loosen screw (4), taking special care to seals (5).

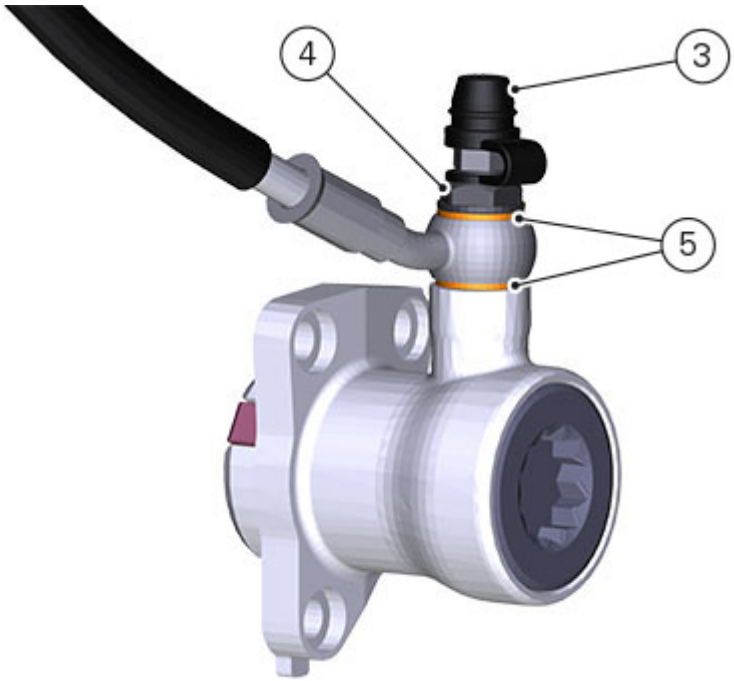

Push the internal piston (A) to force out all the fluid from inside the unit.

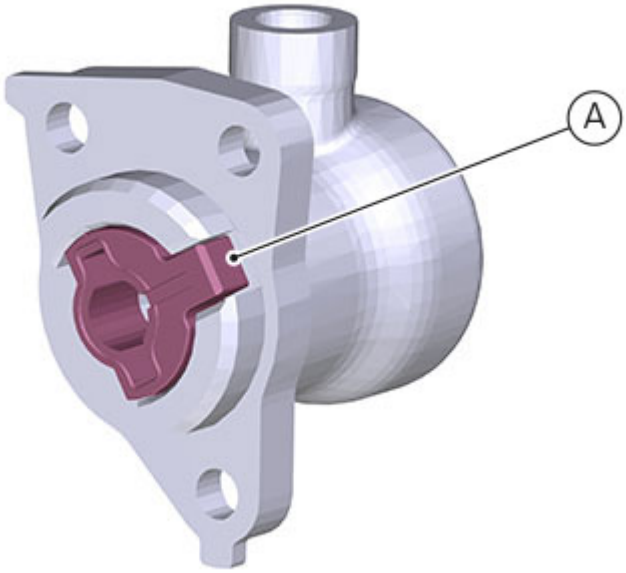
A

Refitting the clutch master cylinder assembly

Insert the clutch master cylinder assembly (3) inside handlebar left-hand side.
Position master cylinder so as to align it with handlebar reference (A).

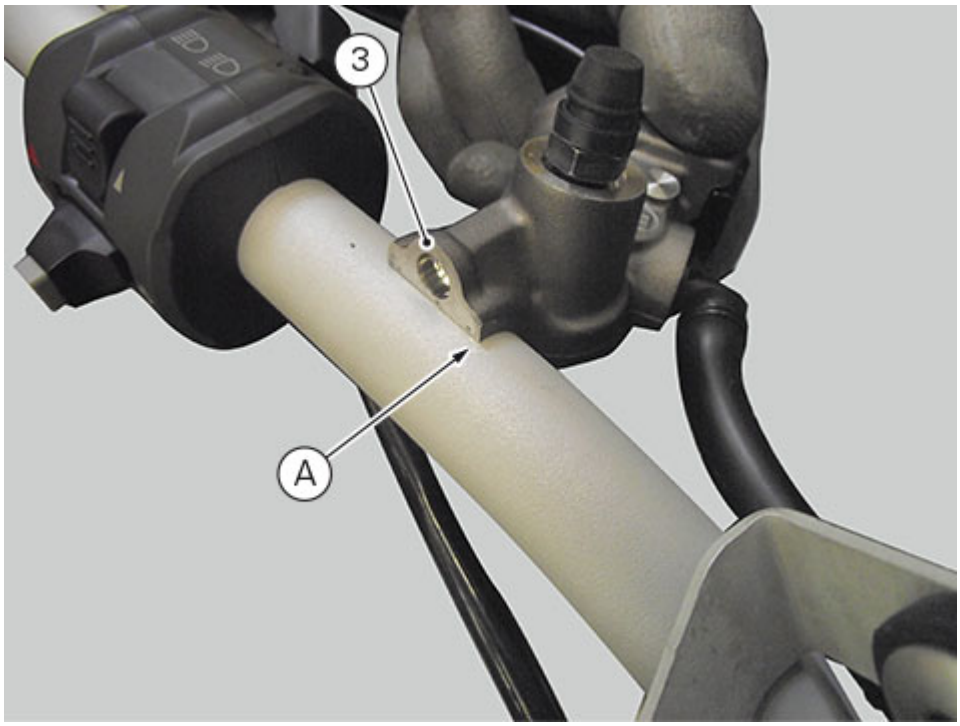



Couple clamp (6) with the clutch master cylinder control and fix them with screws (5).
Tighten screws (5) to a torque of 10Nm±10% following the sequence 1-2-1 and starting from the upper screw.

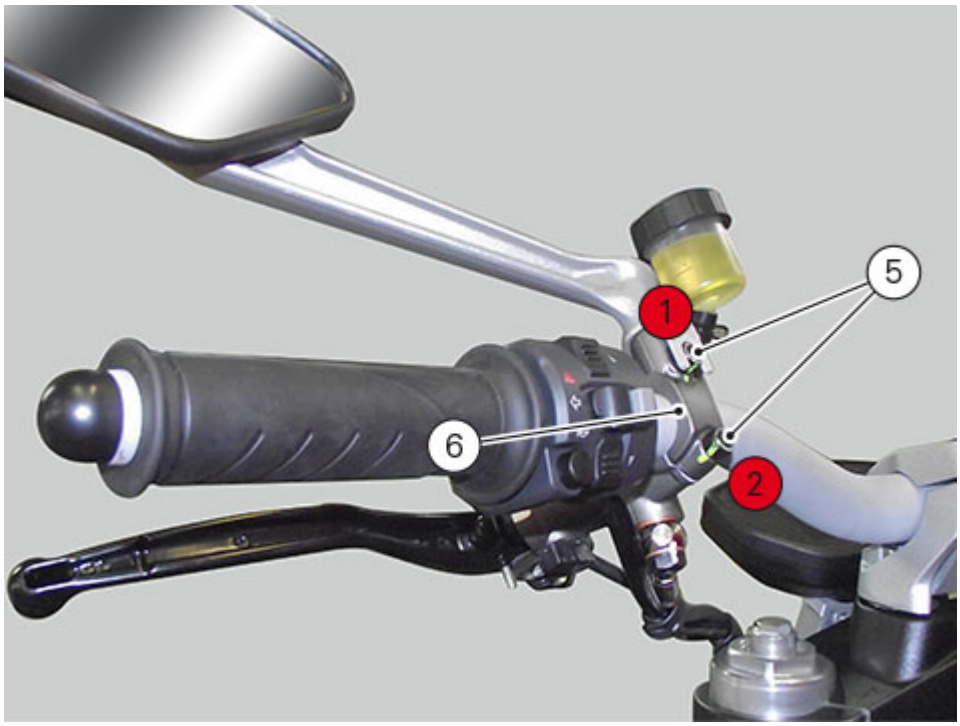

Position the hose (4) and sealing washers (2) on the master cylinder unit (3) and secure with the special screw (1), without tightening.

Warning
An incorrectly positioned hose can cause system faults and interfere with moving parts.

For the positioning of the clutch hose (4) and retaining clips, refer to "Refitting the clutch slave cylinder".
Tighten special screw (1) to a torque of 23Nm±10%.

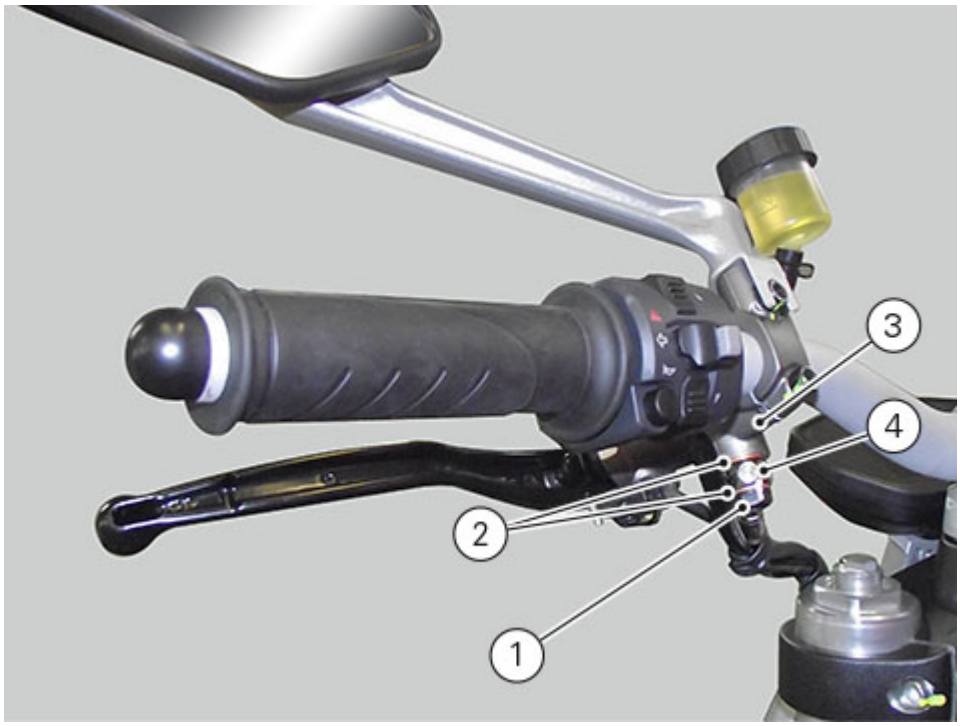

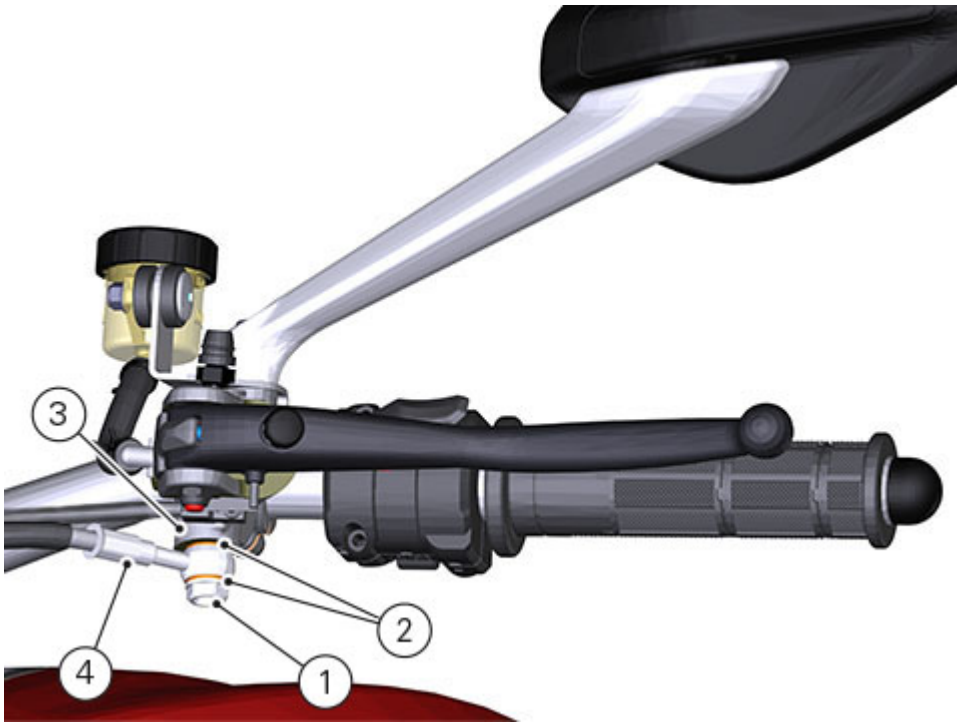

Check hose (4) correct positioning both on clutch lever and slave cylinder.

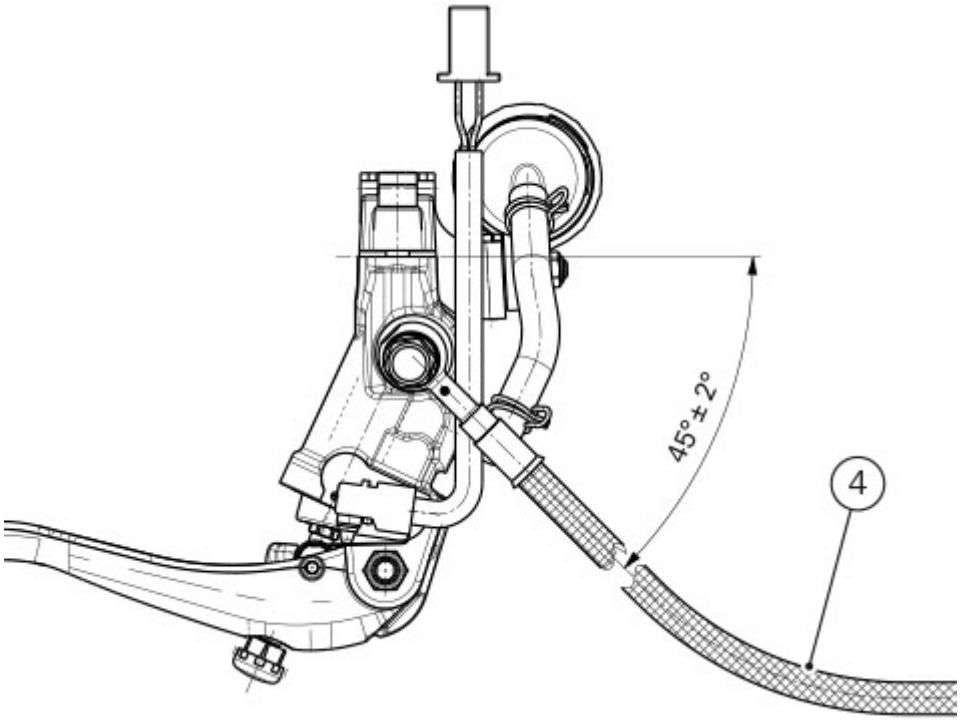

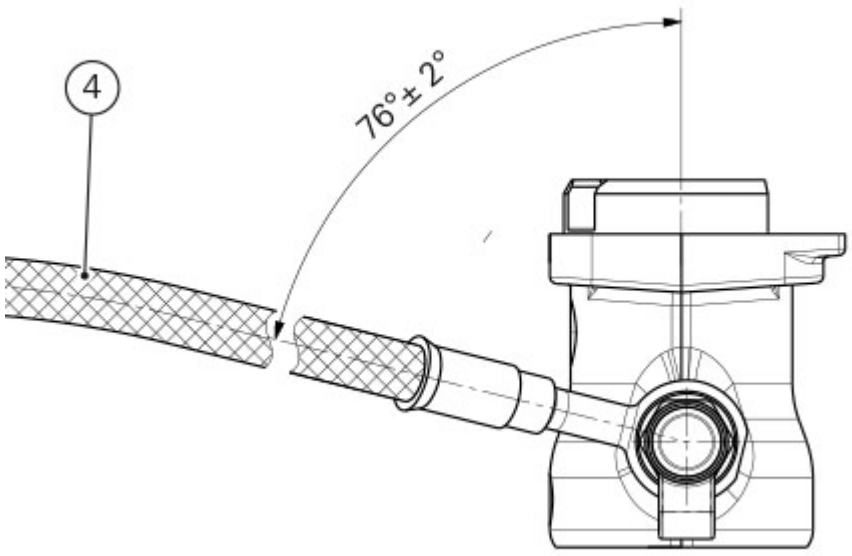
4
76° ± 2°

Removing the clutch master cylinder assembly

Warning
The clutch master cylinder manufacturer advises against servicing the brake master cylinder due to the safety critical nature of this component. Incorrect overhaul of this component could endanger rider safety.

Replacement operations shall be limited to the following parts: control lever, reservoir assembly, and master cylinder fasteners.

Drain the clutch system (Draining the clutch system circuit).
Remove the LH rear-view mirror (Removing the rear-view mirrors).

Unscrew the special screw (1) recovering the sealing washers (2), to release the clutch master cylinder unit (3) from the clutch control pipe (4).

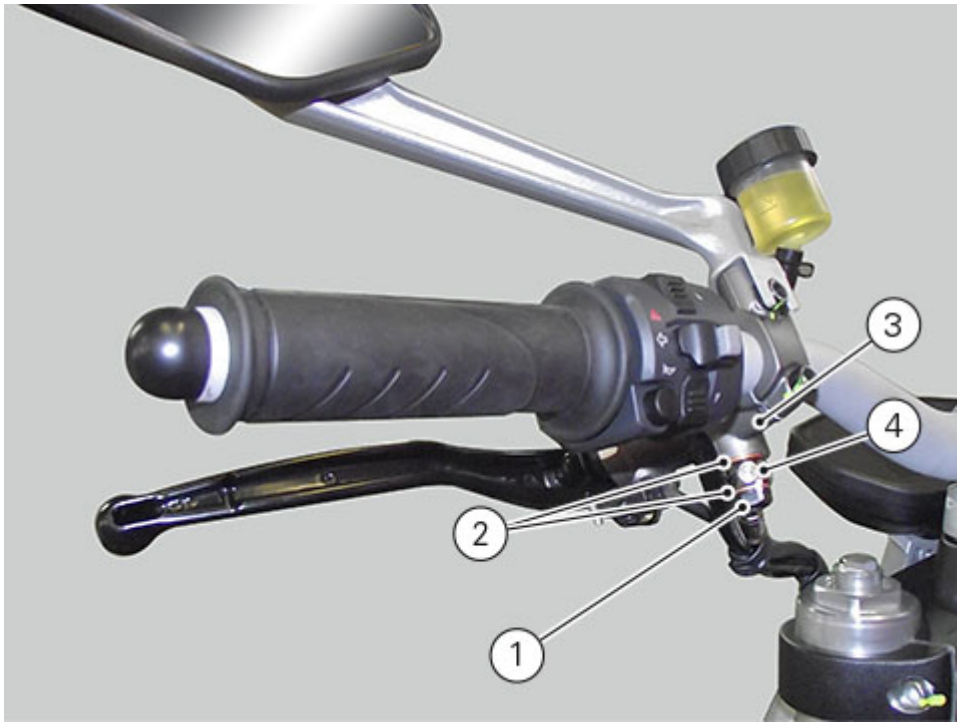

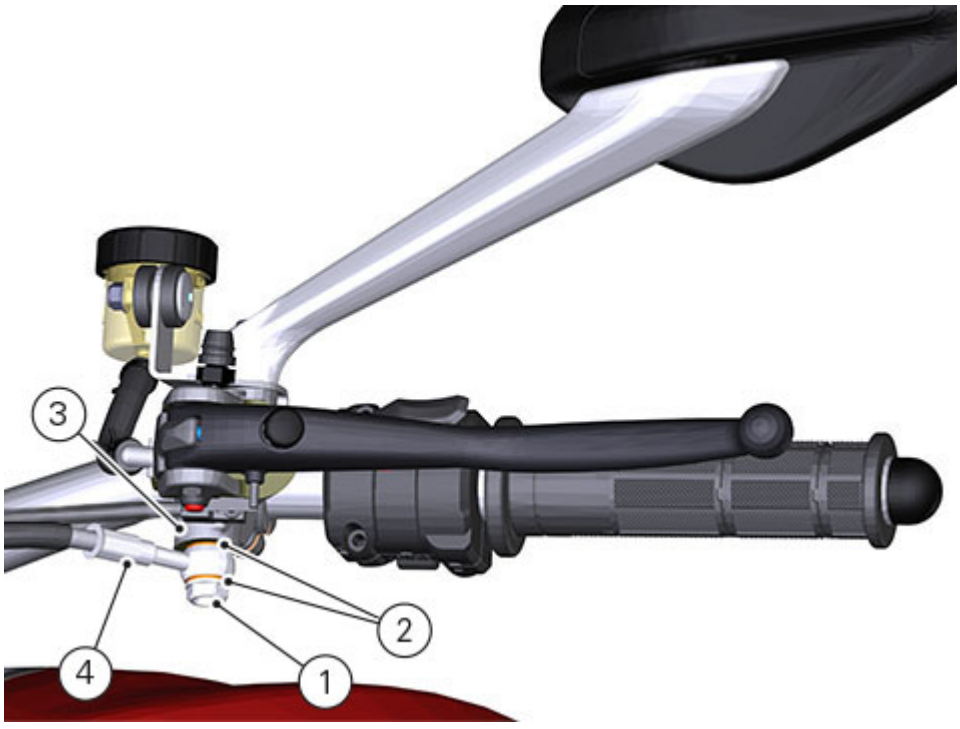

Undo the screws (5) securing the U-bolt (6), and then remove the clutch brake master cylinder assembly (3) from the handlebar.



Refer to the exploded view for indications on disassembly and replacement of unit components.

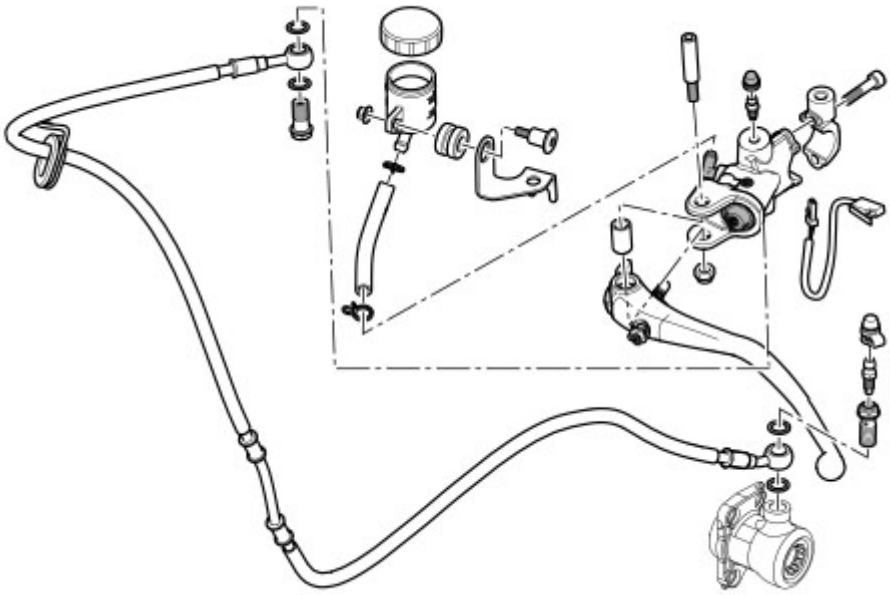

Refitting the ignition switch

Position ignition switch and tighten two new screws (4) with pre-applied threadlocker, to a tightening torque above 12Nm in order to shear screw heads.



Connect ignition switch connector (3) on vehicle LH side, restoring correct cable routing (Routing of wiring on frame).

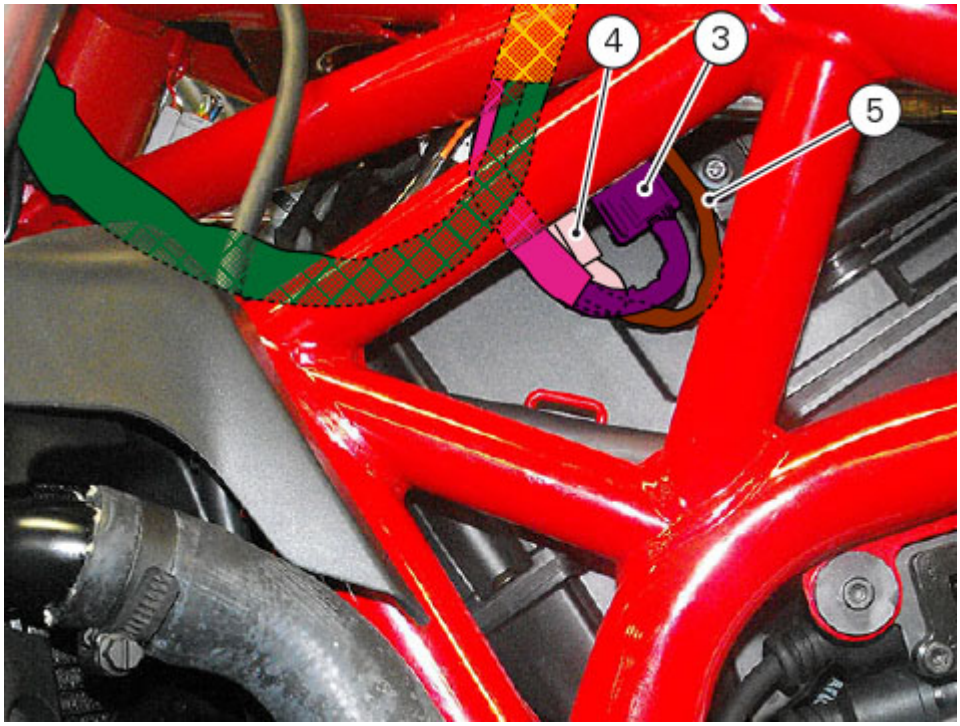

Refit the steering damper lever (1) (Refitting the steering damper).

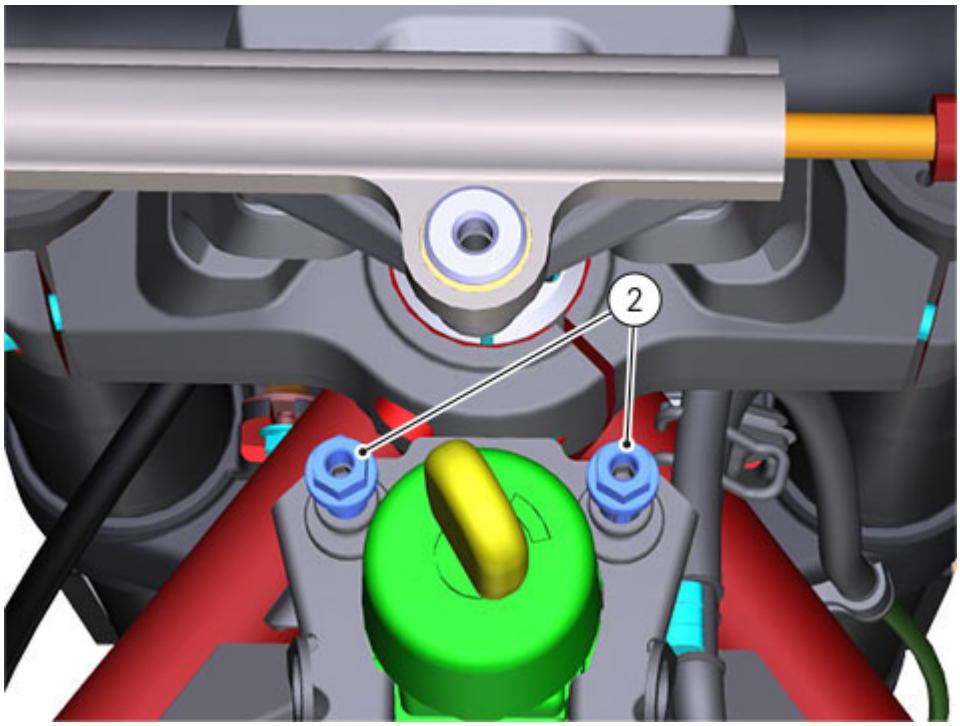

Refit the fuel tank (Refitting the fuel tank).

Removing the ignition switch

Remove the fuel tank (Removing the fuel tank).
Remove the steering damper lever (1) (Removing the steering damper).



Remove the two screws (2) on ignition switch using a special tool.

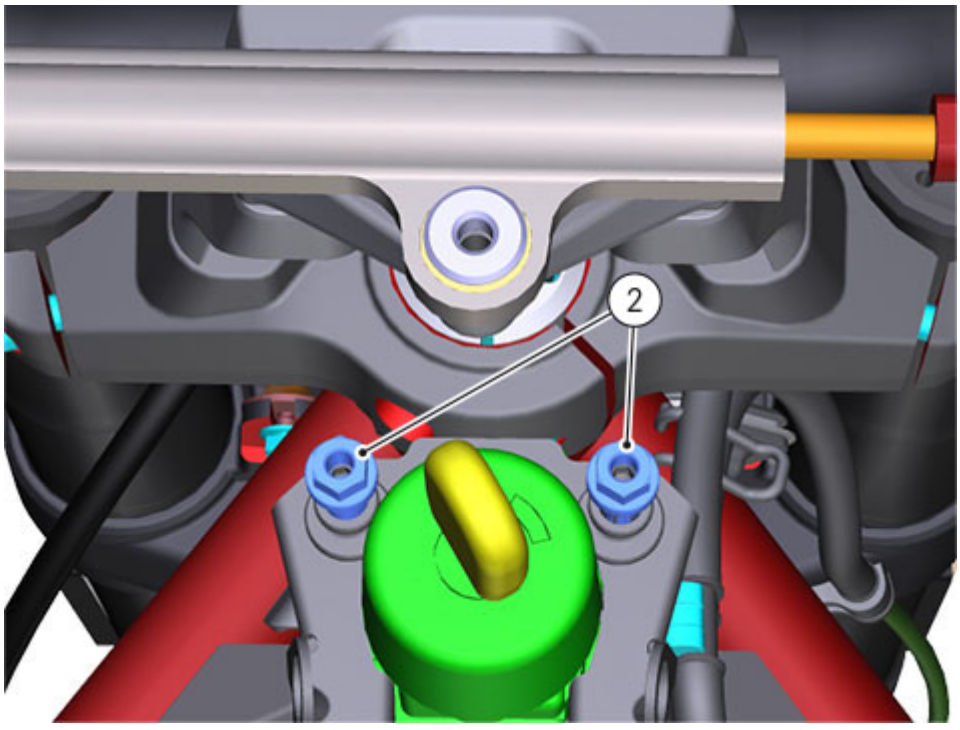

Disconnect ignition switch connector (3) positioned on vehicle LH side.

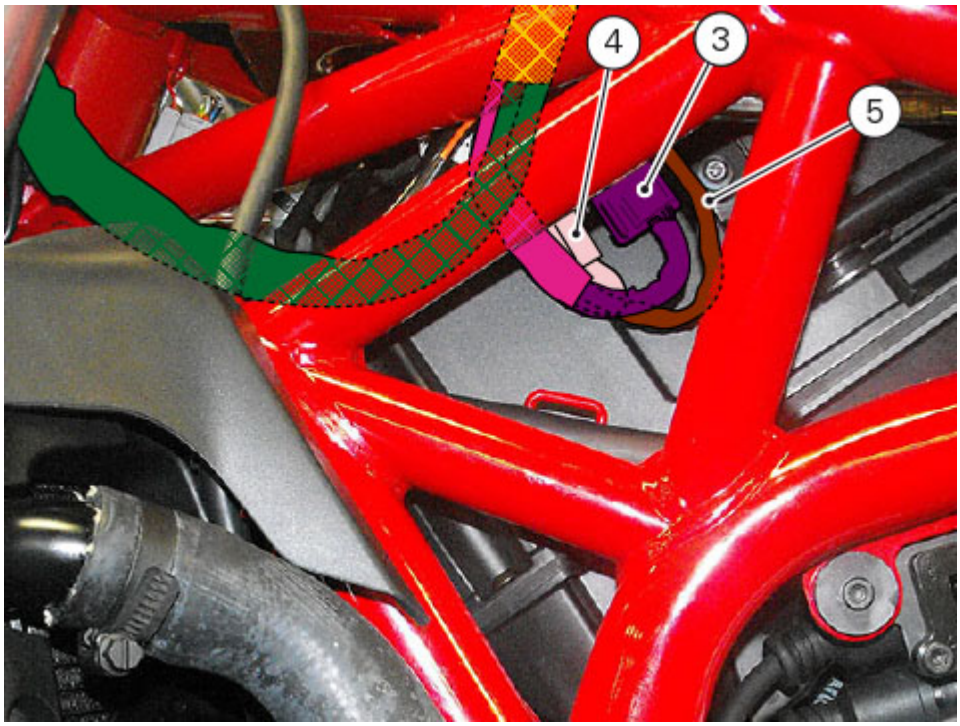

Remove the ignition switch.

Refitting the gear change control

Apply the threadlocker on shaft (1).
Install O-ring (3) onto shaft (1).
Grease screw collar (1) with the specified grease.
Insert the shaft (1) in the gear lever (2), and insert the other O-ring (3) and the washer (4).
Fit the gear lever (1) on the footpeg plate by inserting and tightening the shaft (1) to the specified torque of 23Nm ±10%.

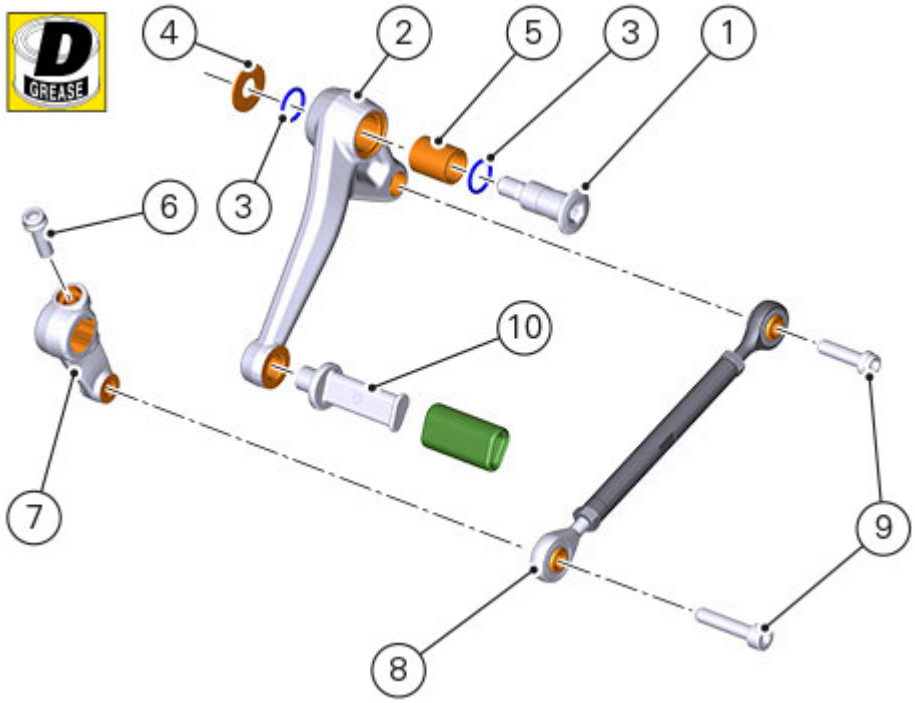

Fit lever (7) on gear transmission rod assembly (8), starting screw (9).
Tighten the screw (9) to a torque of 10Nm ± 10%.

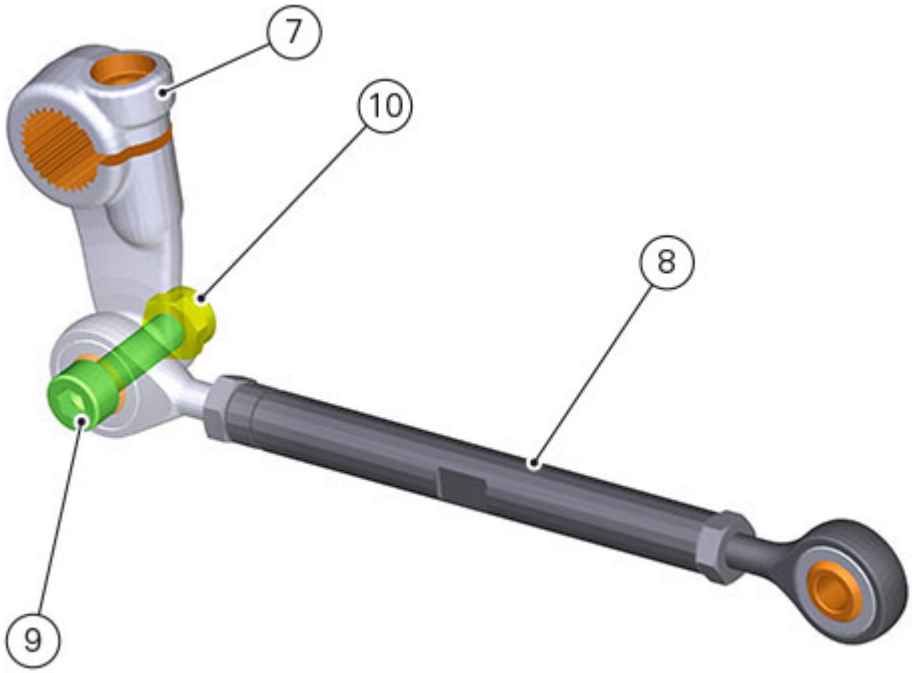

Fit the gear change unit inserting the lever (7) on the gear control pin, apply threadlocker on the screw (6) and insert it on the lever (7).
Tighten the screw (6) to a torque of 10Nm ± 10%.

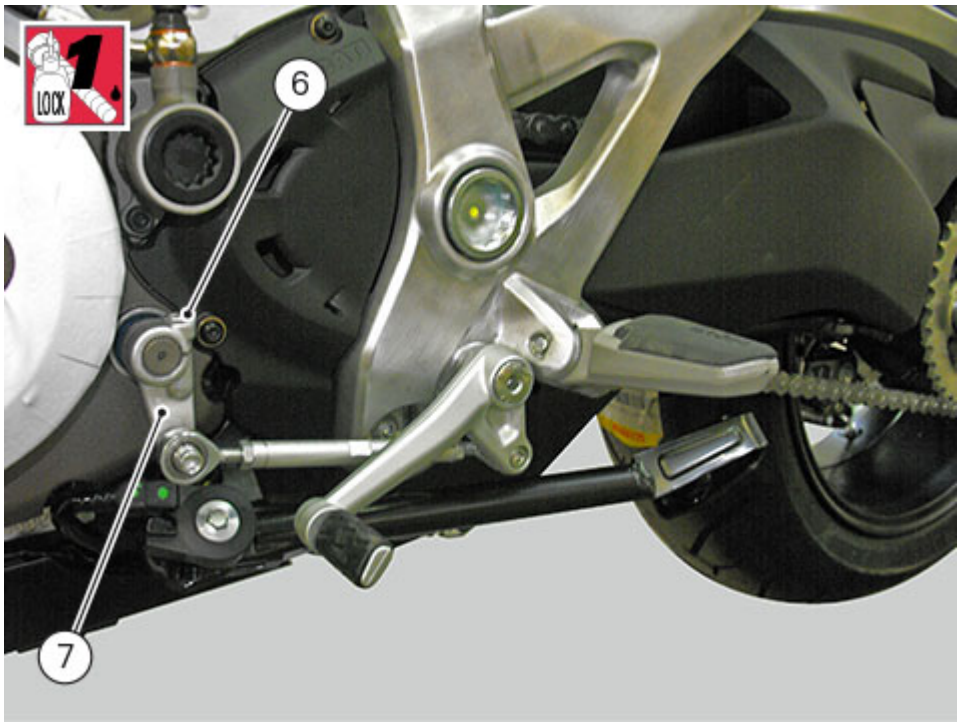

Adjust transmission rod (8) complying with the following values and applying the specified threadlocker.

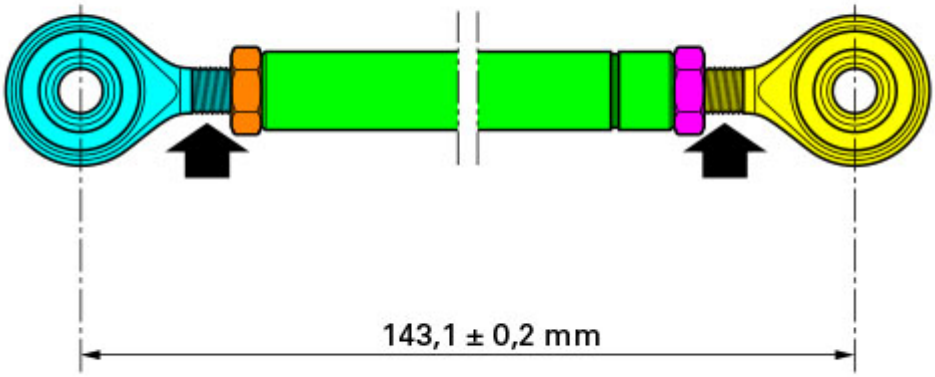

Then tighten transmission rod retaining nuts to a torque of 10Nm±10%.

Disassembling the gear change control

Refer to the exploded view for indications on disassembly and replacement of unit components.

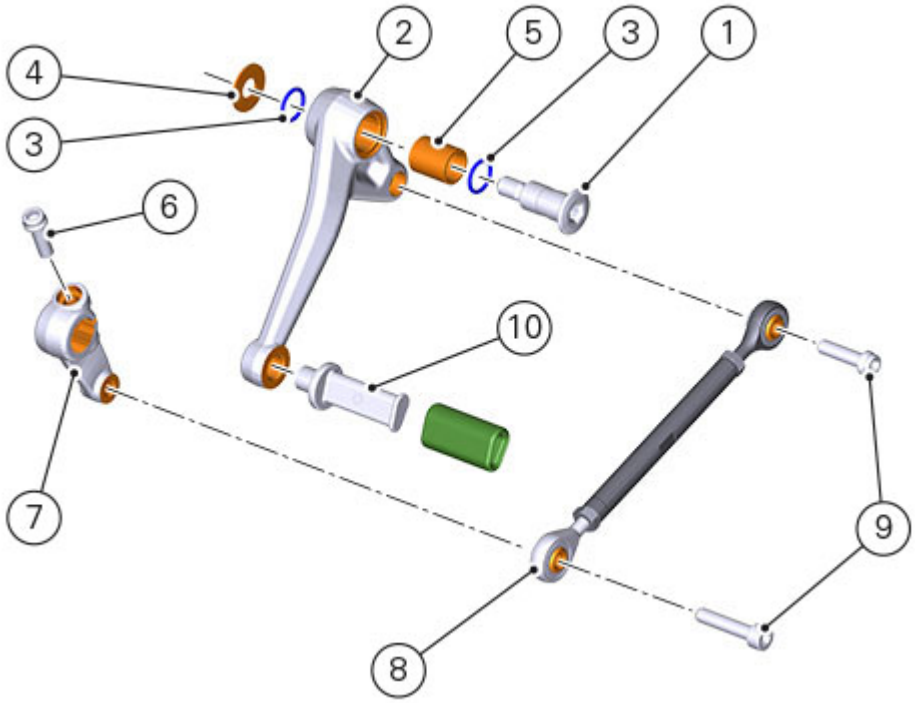

If the bush (5) inside the pedal (2) needs replacing, grease the external surface and drive the new bush into place using a press. The bush must be seated 2 mm below the outer face of the pedal.

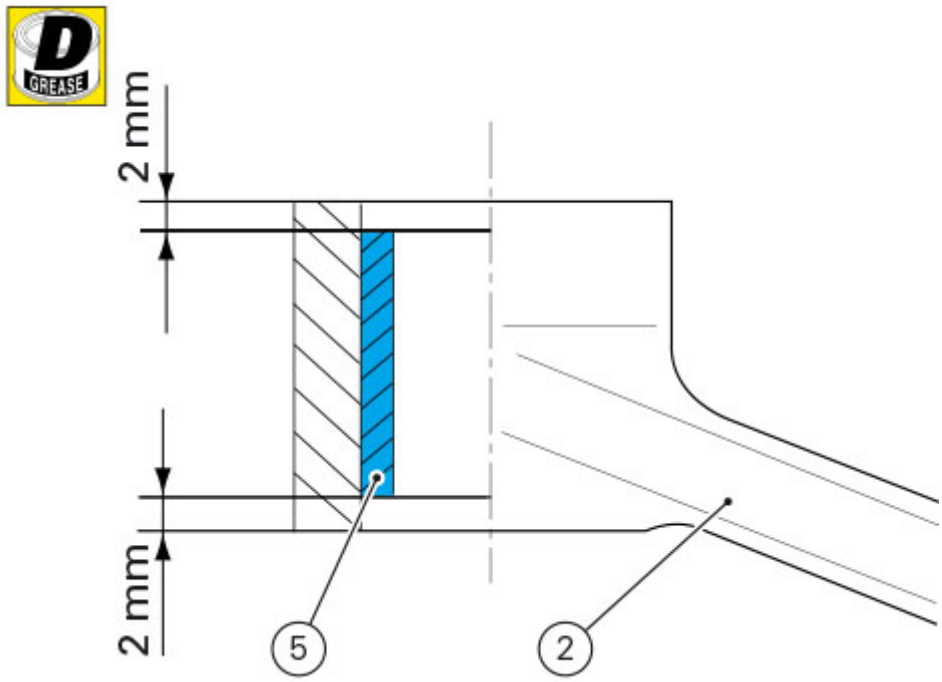

Warning

After working on the gear change control, check the position of the gear pedal.

To adjust the gear pedal position, follow the instructions under chapter "Adjusting the position of the gear and rear brake pedals.".

Removing the gear change control

Loosen and remove the pin (1) securing the gear pedal (2), and collect the O-rings (3), the washer (4) and bush (5).
Undo and remove the screw (6) securing the gear lever (7) to the gearbox shaft.
Remove the lever (7) complete with the gear control assembly.

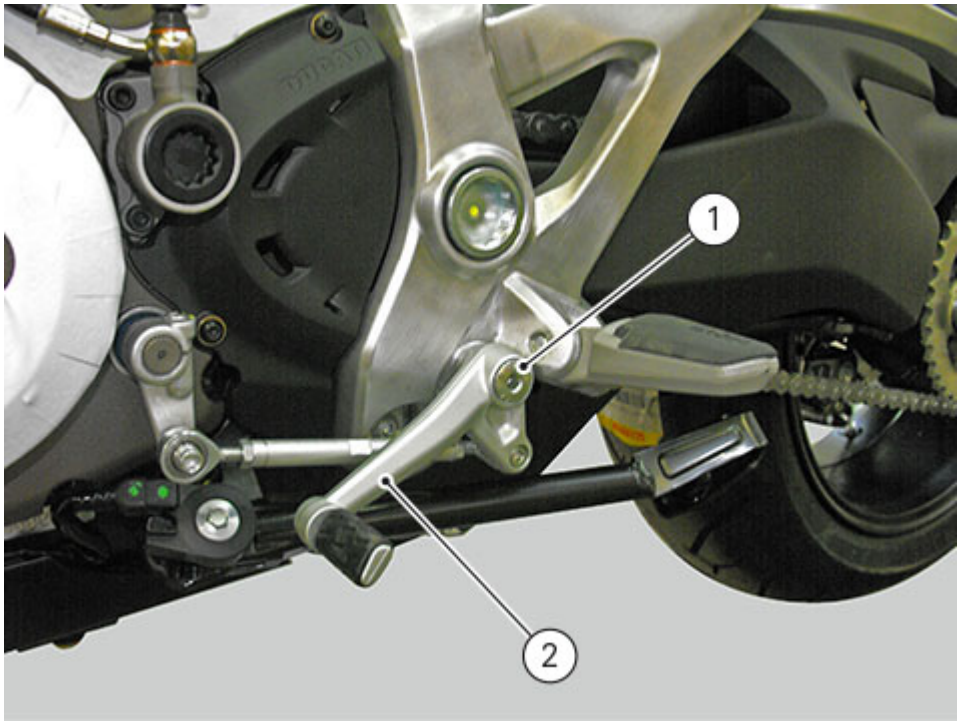

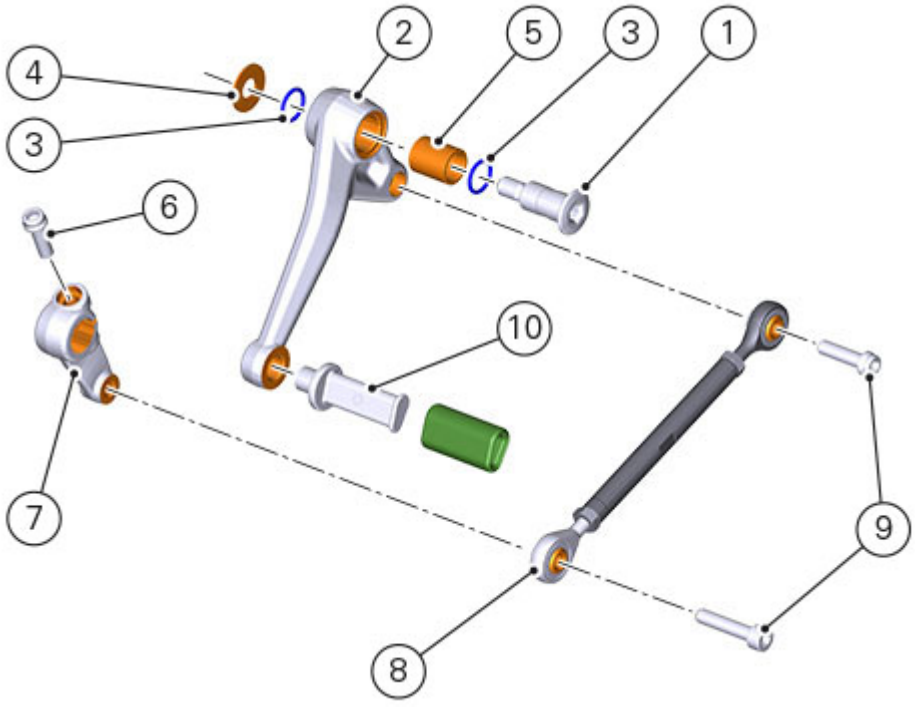

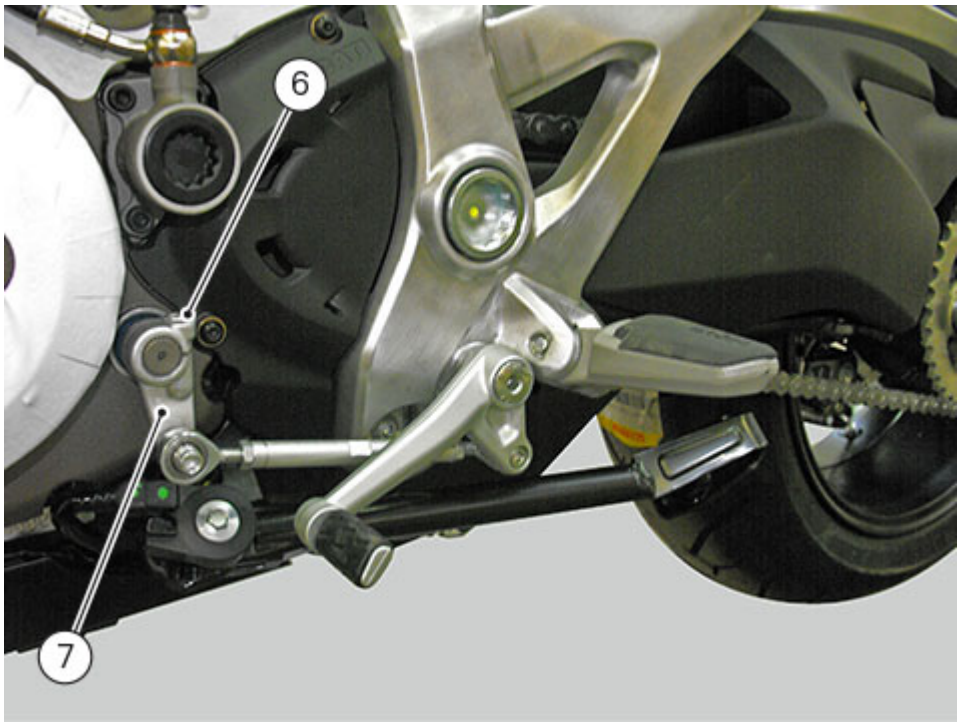

Note
Mark the position of lever with respect to the gear selector shaft.

To remove lever (7) from gear transmission rod assembly (8), loosen nut (10) of screw (9) then slide out transmission rod (8) and lever (7).

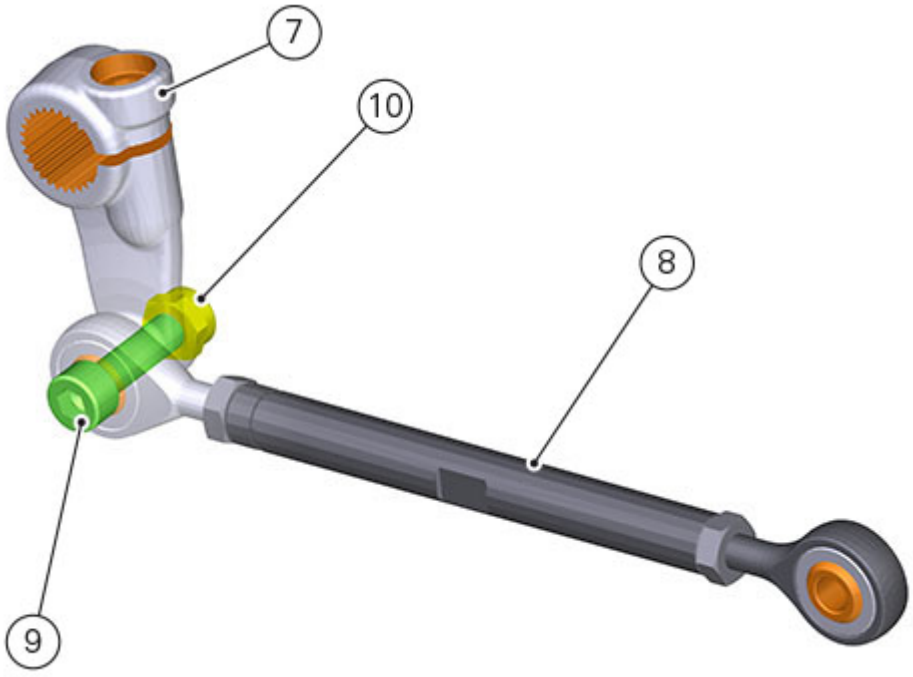

Refitting the front fork

Refit the fork legs setting them at the indicated height (E) to the bottom yoke.
(FOR USA VERSION, ONLY) Position turn indicators on fork legs (Refitting the light assembly).

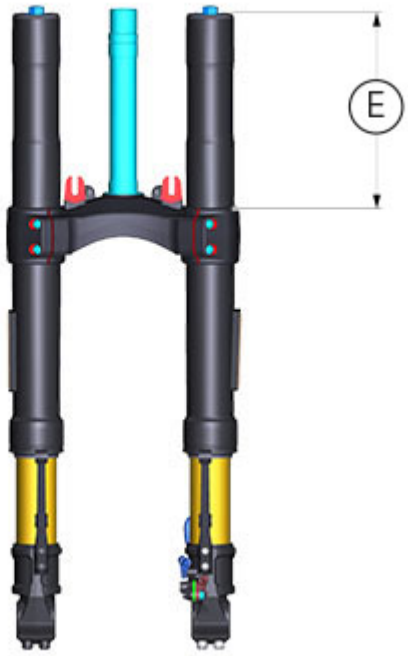

Warning

The difference in height between the two fork legs must be no greater than 0.1 mm.

Position fork legs (5) on bottom yoke (4) and steering head (3).
Fasten fork legs by tightening screws (1) to 24Nm ± 5% and screws (2) to 22 Nm ± 5% retaining bottom yoke (4) and steering head (3): tighten screws (2) in a 1-2-1 sequence.
Tighten one leg at a time.

Important

If the screws were removed upon disassembly, smear their threads with the specified grease before tightening.

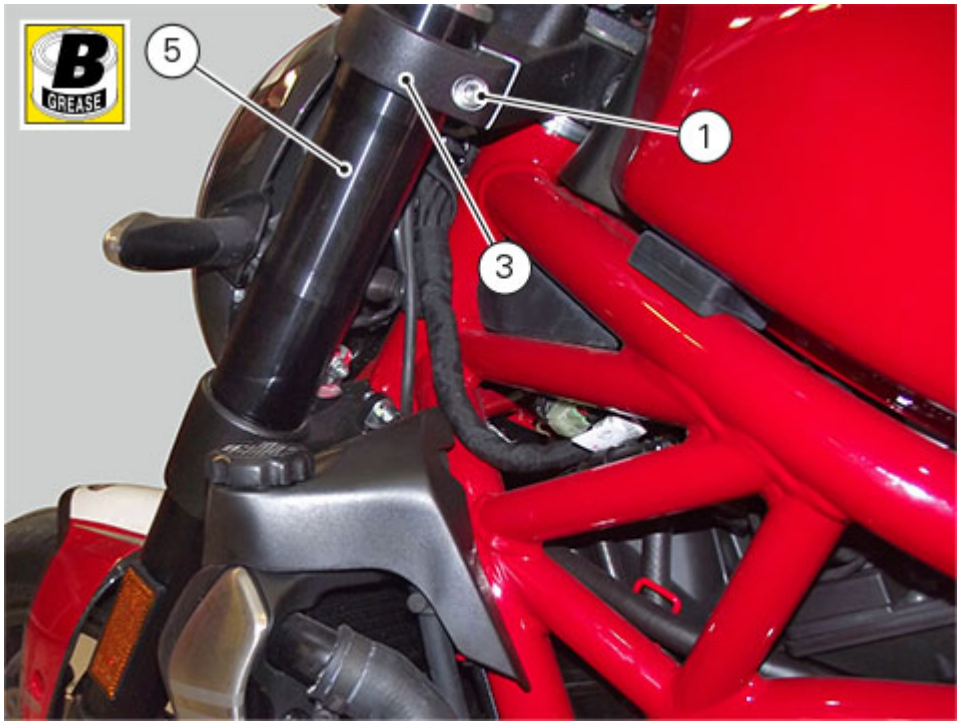

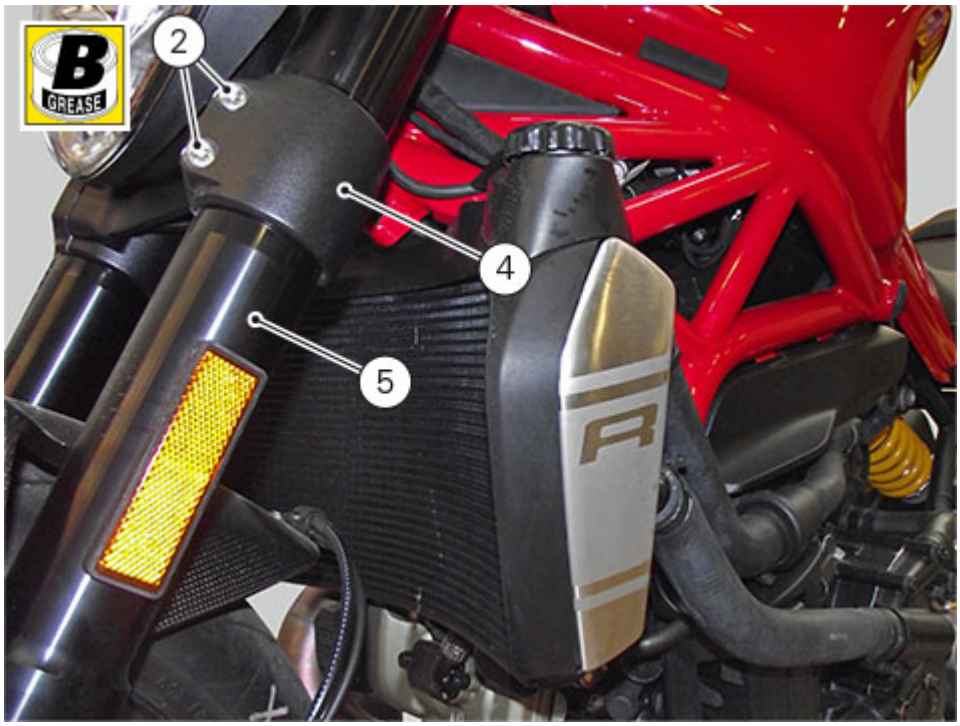

Refit any parts removed from the frame.
Refit the front mudguard (Refitting the front mudguard).
Refit the front wheel (Refitting the front wheel).
Complete turn indicator refitting procedure (FOR USA VERSION, ONLY).

To adjust the forks refer to section "Adjusting the front fork".

Warning

Do not use the motorcycle when front mudguard is not in place since this part supports the brake lines and avoids that they interfere with the wheel under braking.

Overhauling the front fork

General safety rules

Carefully read the procedures below before working on the fork for any reason whatsoever.
Please remember that suspension installation, maintenance and repair require specific knowledge, equipment and know-how.
After complete disassembly, always renew seals upon reassembly.
When tightening nuts or bolts close to one another, always follow a 1-2-1 sequence; comply with the specified tightening torques. Never use flammable or corrosive solvents to clean parts, since they could damage the seals.
If necessary, use specific detergents, in preference biodegradable, non corrosive, non flammable ones or having a high flash point, compatible with the seal materials.
Before reassembling, always lubricate the fork mating parts.
Always smear seal lips with some grease before reassembly.
When using a screwdriver to install or remove snap rings, O-rings, guide bushes or sealing rings, make sure not to scratch or damage the parts.

Note
It is recommended to overhaul one fork leg at a time.

Do not modify the fork components.

Safety and environment protection rules

Smaltimento
Do not dispose of the exhausted fluid into the environment; do not pour the product, either new or exhausted, inside drains, water courses or the soil. Collect and deliver waste to authorized collecting centres. Dispose of waste in compliance with the prevailing local and national standards.
European Waste Catalogue Codes recommended for waste disposal as indicated by Decision No 2001/118/EC: CER 13 02 05* (Mineral-based non-chlorinated engine, gear and lubricating oils waste).

Note
It should be noted that the above-mentioned CER code is a general and non-binding provision, provided based on product original composition and intended use. The user is thus responsible for selecting the CER code most suitable to the concerned product, based on product real use and taking into account any alterations and/or contaminations of the product, as well as any amendments to the prevailing standard on waste disposal.

Using the vice

Some service procedures might require the use of the vice to hold some fork components.

Warning
Incorrect use of the vice could damage the fork, even though damage might not be immediately visible, and jeopardise its safety features.

Carefully comply with the following instructions:
Only use the vice when it is absolutely necessary.
Always use a vice with jaws made from soft material.
Do not tighten vice too much.
Do not vice fork at positions where the least deformation might damage the part and cause suspension malfunction.
The figure below highlights the suggested areas that can be used to vice the fork: fork bottom end (A) and sleeve (B) in the area where the bottom yoke is fastened.

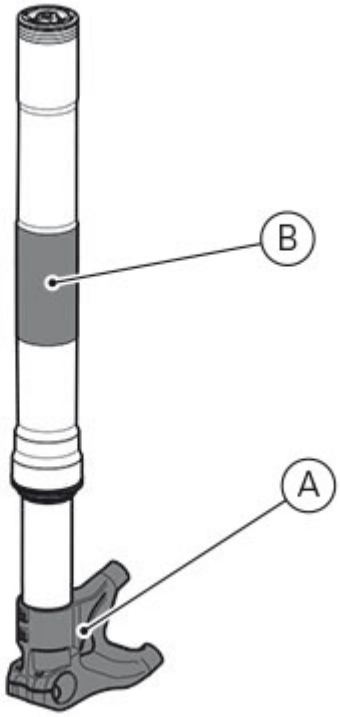

REMOVAL PROCEDURE

Remove the front wheel (Removing the front wheel).
Remove the forks (Removing the front fork).

Release all spring preload working on the adjuster on fork plug (Adjusting the front fork).
Note the preload value.
Vice fork (1).

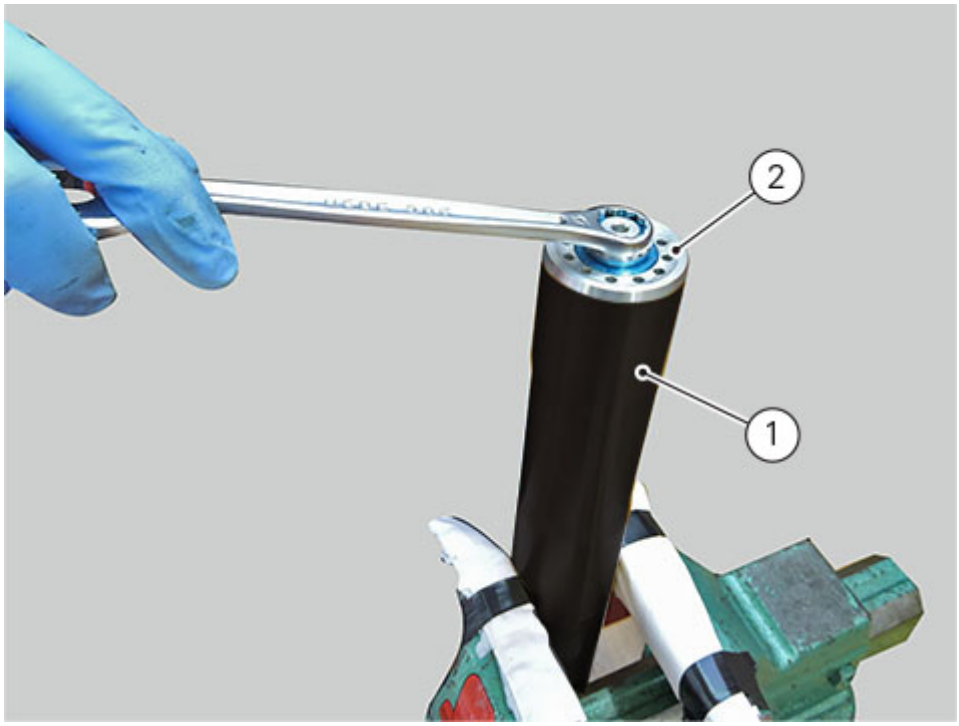

Loosen the top plug (2) using tool (A) no. **88713.2854**.

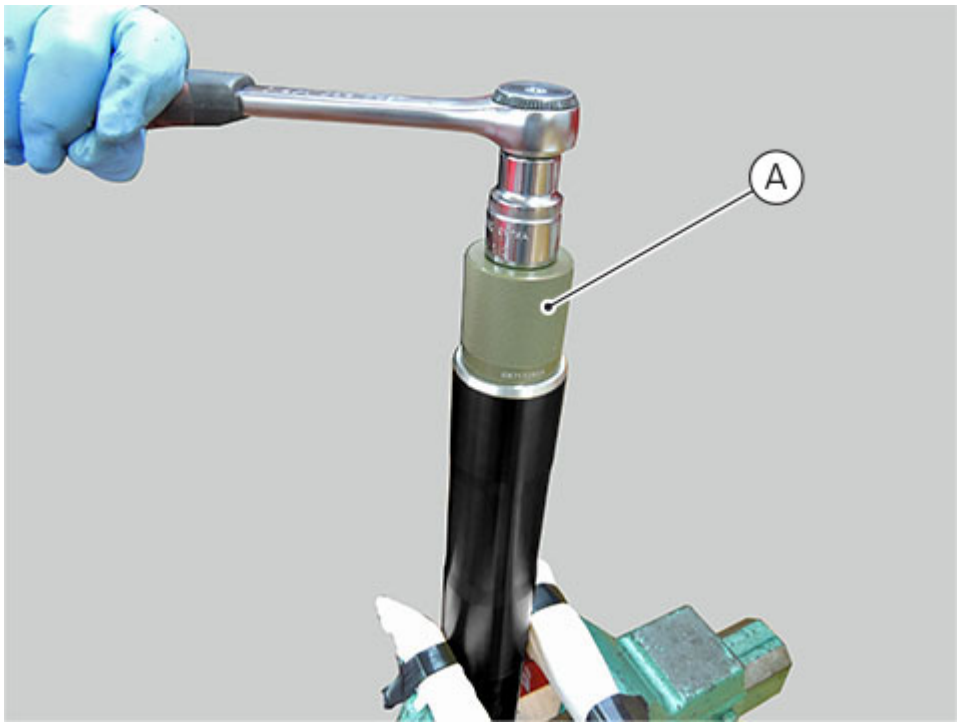

Take the outer sleeve (1) down.
Remove fork plug (2) by detaching it from the damper rod unit (3).

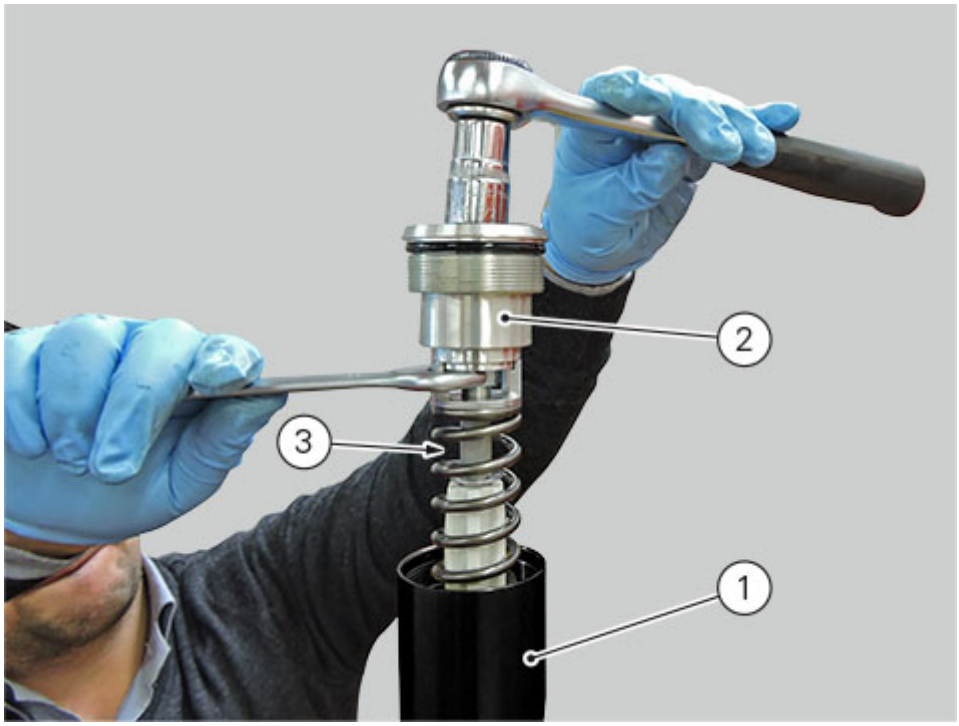

Drain fork fluid in a suitable container.



Remove spring spacer (4), spring (5) and preload tube (6).

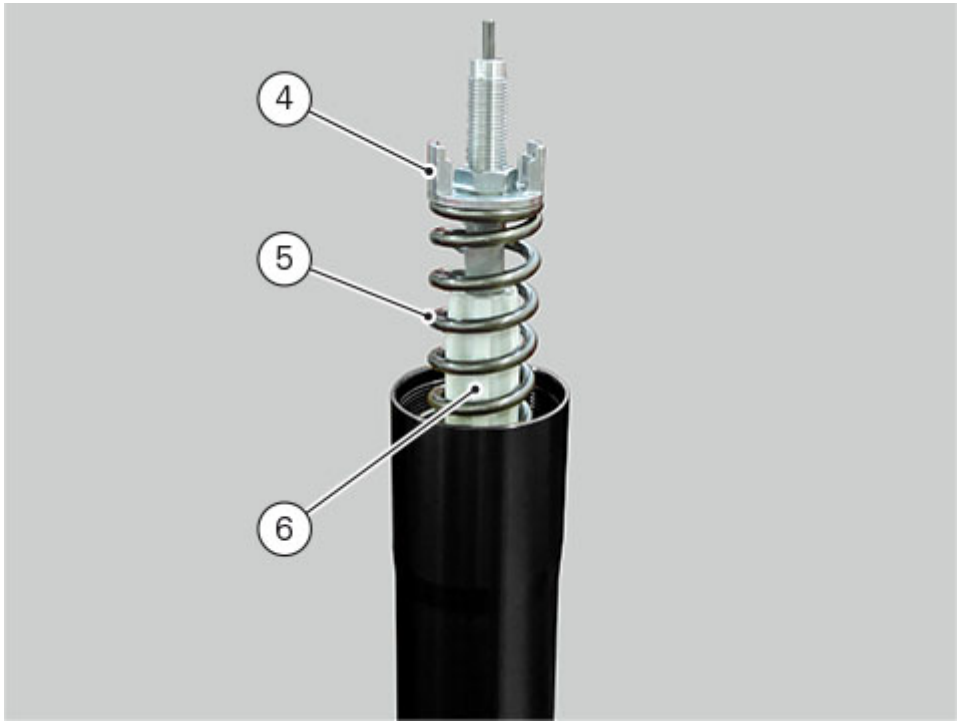

Separate the outer sleeve (1) from fork leg (7).

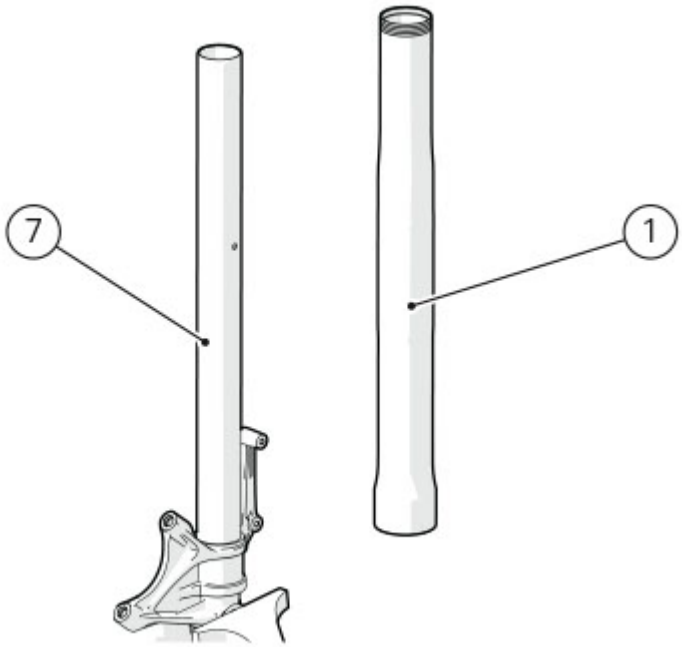

Remove dust seal (8), snap ring (9), oil seal (10) and shim (11).

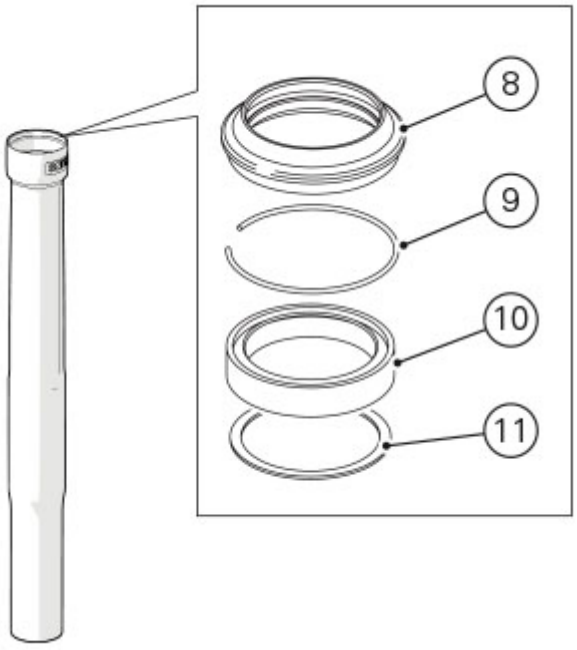

Using tool (B) no.**88713.3529** and tool no. **88713.2857** remove the two sliding bushings, the one with smaller diameter (12) and the one with bigger diameter (13).

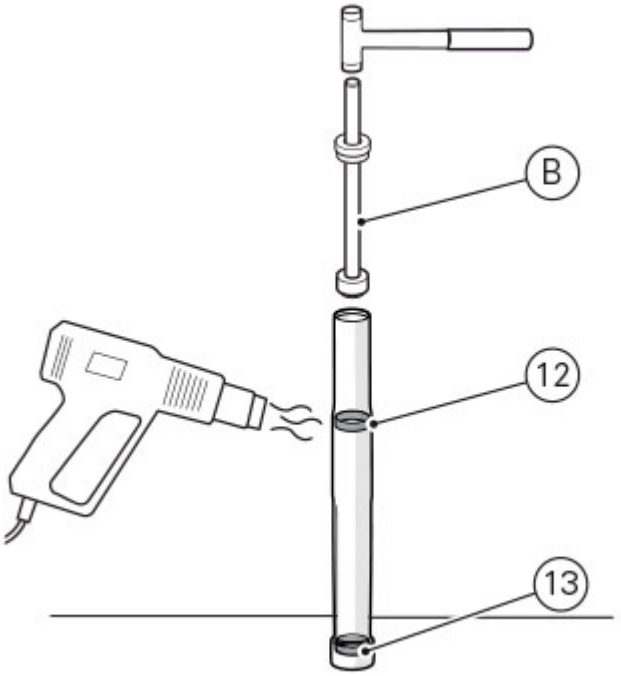

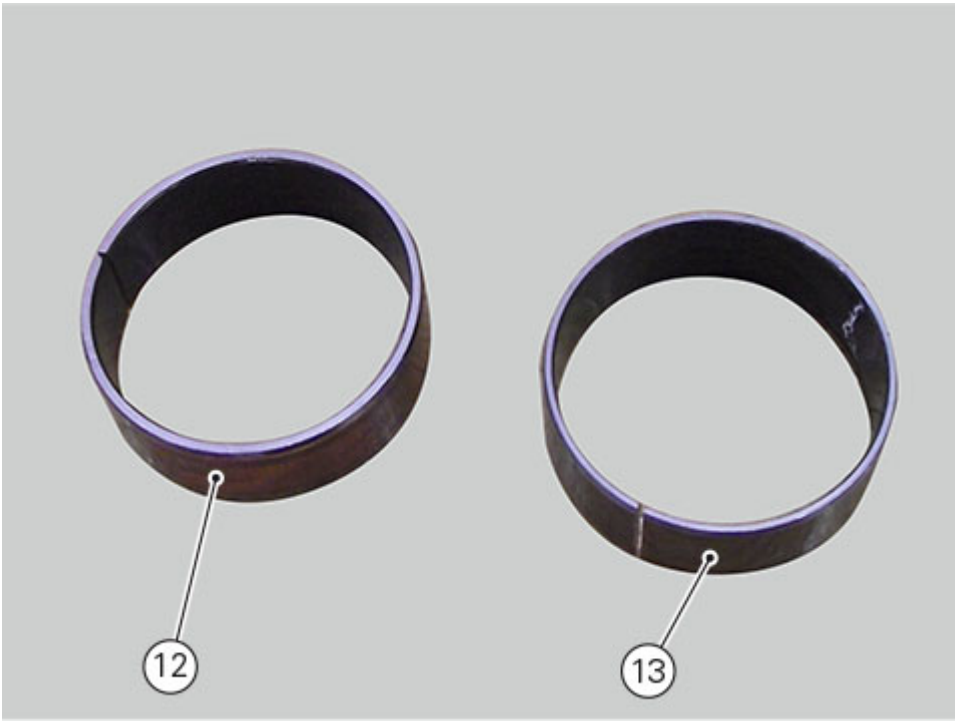

Important
To help bushing removal, heat up the outer sleeve in the areas of the bushings up to a temperature of 100°.

REFITTING PROCEDURE

Note
Thoroughly clean the fork sleeve internal surface and the stem outer surface.

Heat the outer sleeve, in the area close to bushings, up to approx. 100°C
Use a brush to apply the specified threadlocker on the upper bushing seat.
Using tool (B) no. **88713.3529** and tool no. **88713.2857**insert bushing (12) with smaller diameter fully inside sleeve (1).


2.
LOCK

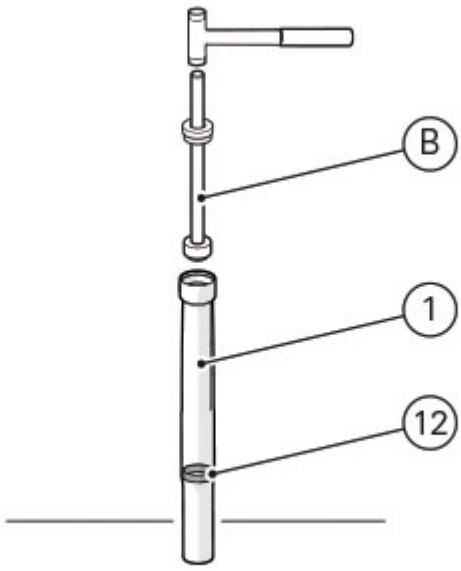
B
1
12





Apply specified grease to the lower bushing seat.
Using tool (B) no. **88713.3529** and tool no. **88713.2858** insert bushing (13) with bigger diameter fully inside sleeve (1).



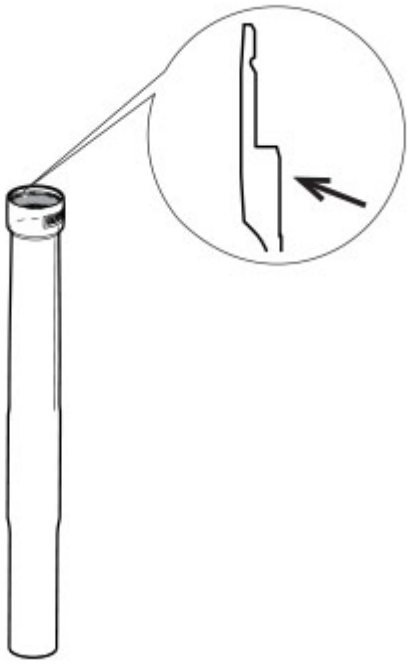

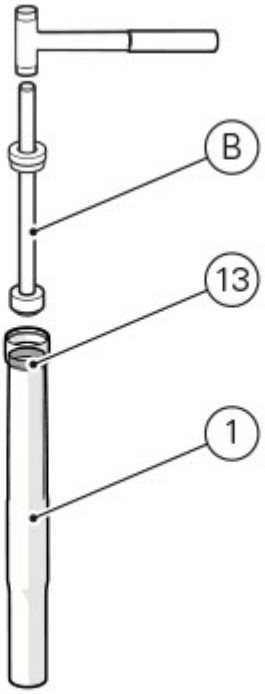



Use adhesive tape to protect the fork leg (7) end.

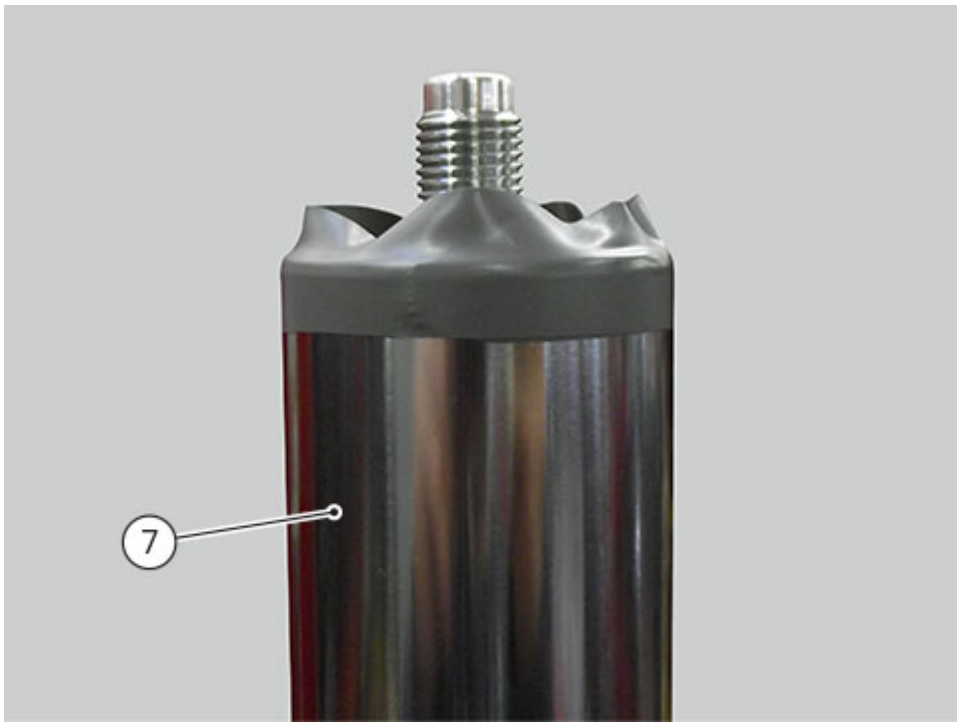

Fit shim (11).

Use fork fluid or seal grease to lubricate the fork leg.
Fit oil seal (10), snap ring (9) and dust seal (8).

Remove the adhesive tape.
Fit leg (7) into the outer sleeve (1).
With tool (C) no. **88713.1096** fit the oil seal fully home.

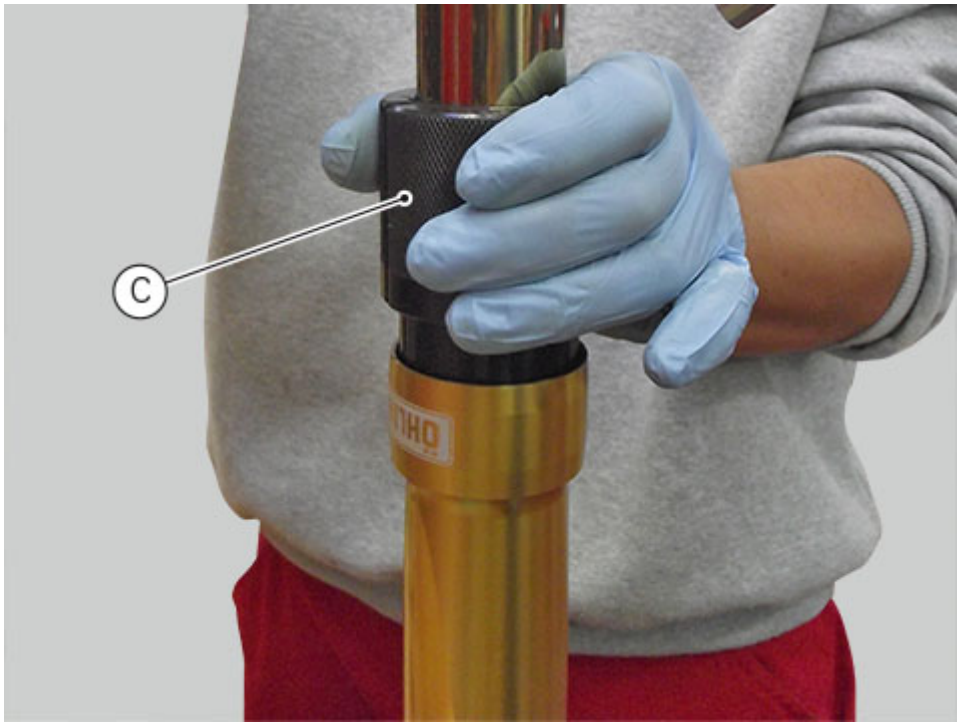

Fit snap ring (9).

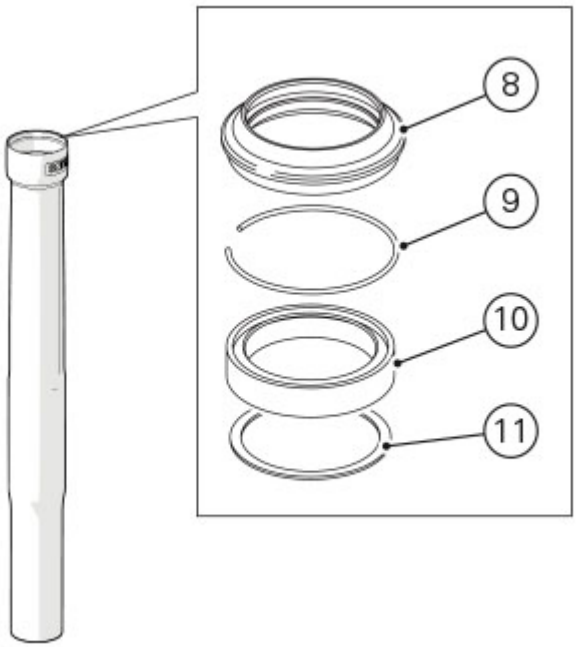

Fit dust seal (8).
Fill-in with the suitable oil.
Push damper rod down to facilitate filling and eliminate any air bubbles.



Restore the correct oil level value by siphoning the oil excess with tool (D) no. **88713.4486** Until reaching a value, with sleeve in fully lowered position, between oil free surface and sleeve end of 150 mm (without spring and preload tube).



Insert preload tube (6), spring (5) by paying attention to the insertion direction.

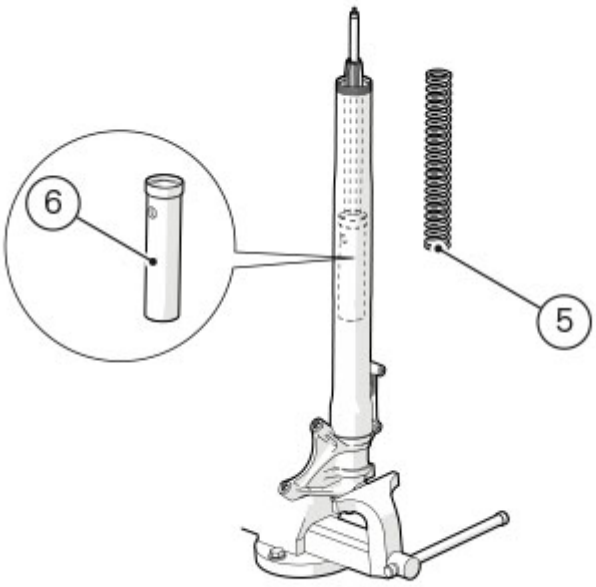

Important

The side with the writings must be facing upwards.

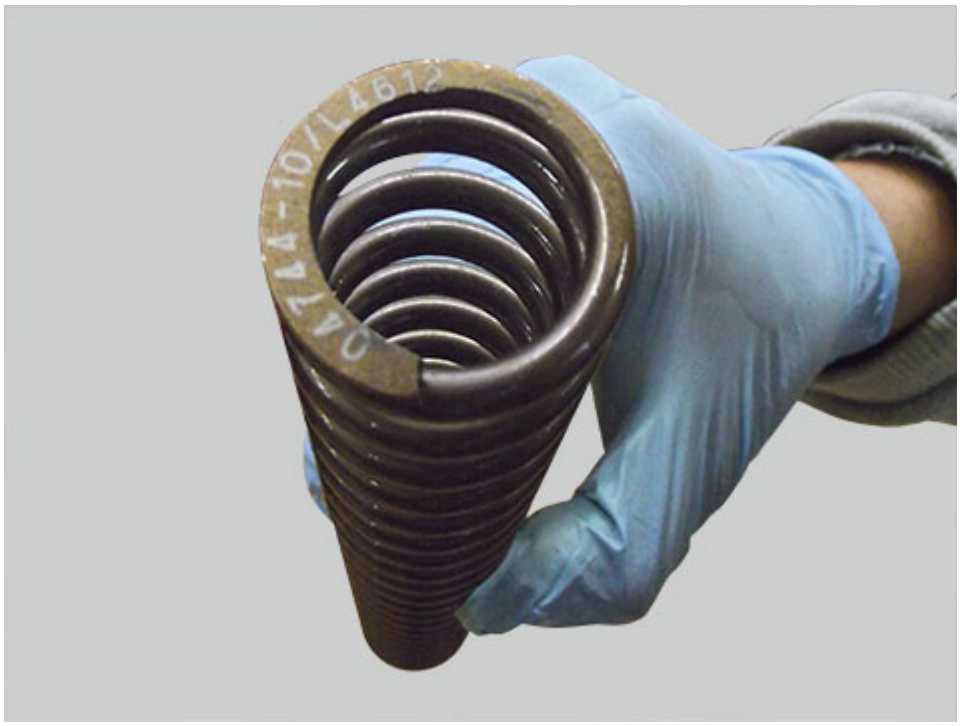

Fit spacer (4) and use tool (E) no. **88713.3203** to pull up the damper rod.

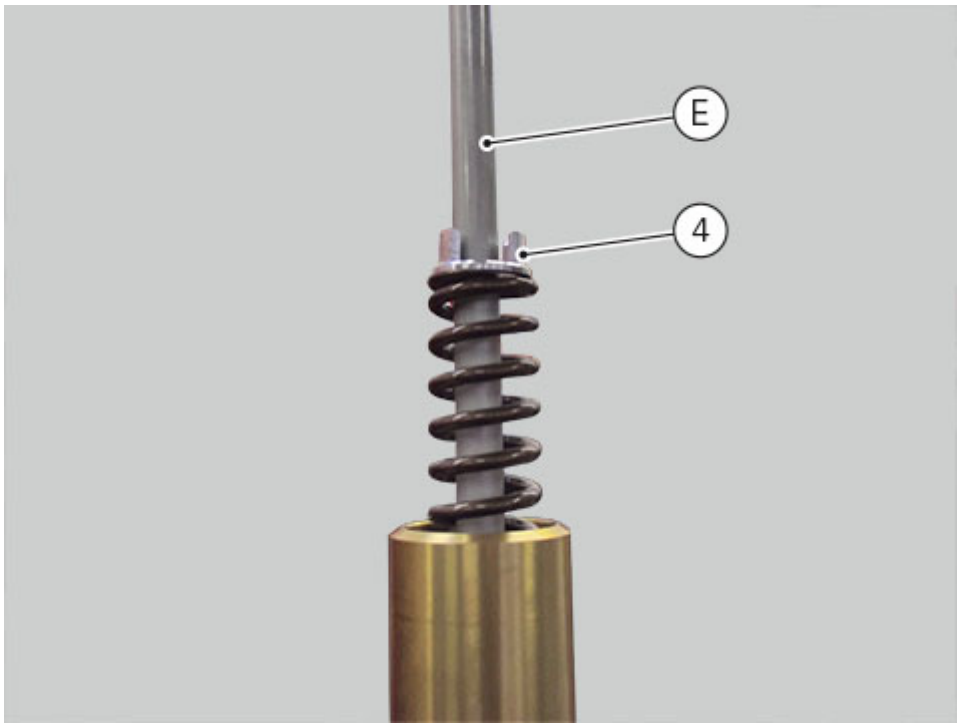

Block the damper rod and manually screw plug (2).

Tighten the damper rod on plug (2) to the specified torque of 20 Nm.

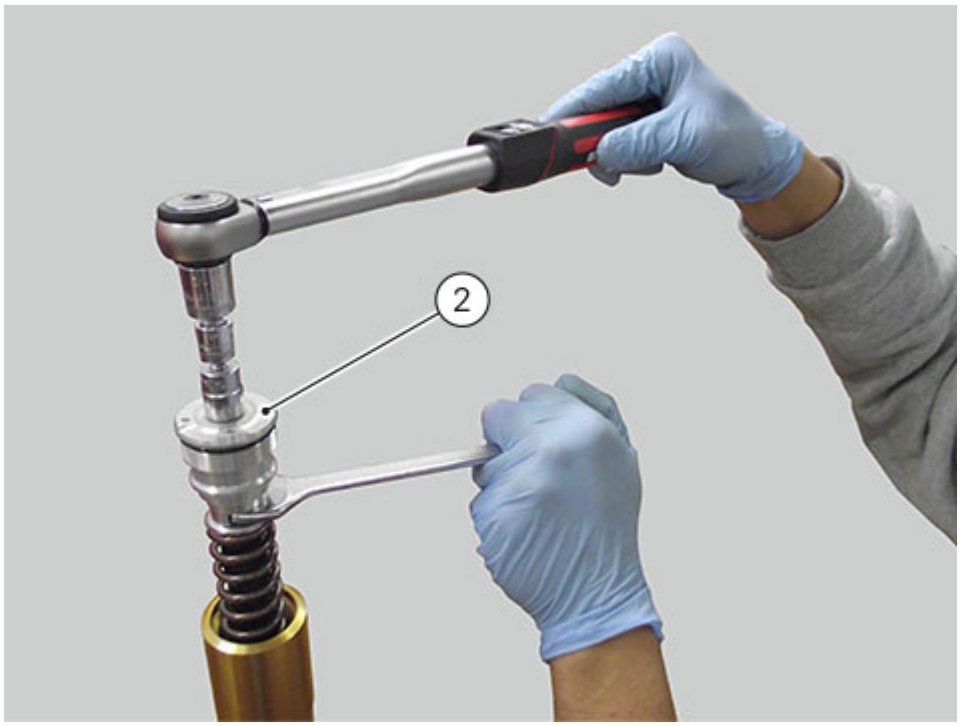

Tighten plug (2) on fork sleeve using tool (A) no. **88713.4743**to a torque of 25 Nm.
Restore the preload value, previously noted.

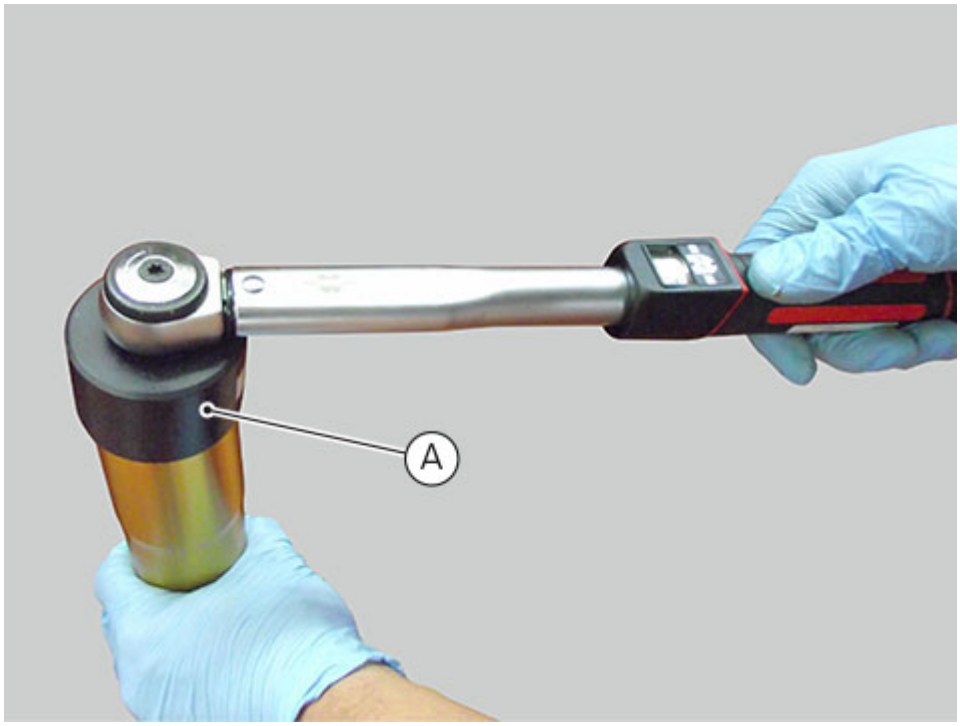

Refit the forks by respecting the removal height (E) shown in the figure (Refitting the front fork).

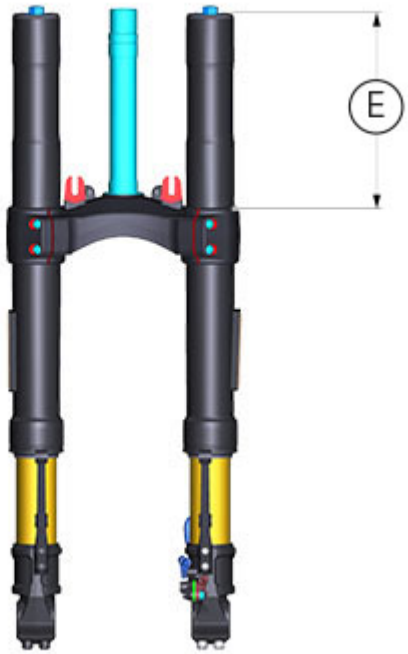

Refit the front wheel (Refitting the front wheel).

Removing the front fork

Warning

The following procedure applies to both vehicle versions.

Before removing the concerned part, you must first remove the following parts:

- front brake callipers (Removing the front brake system);
- front mudguard (- Removing the front mudguard);
- front wheel (Removing the front wheel);

Loosen the screws (1) securing the fork legs to the steering head (3).
(FOR USA VERSION, ONLY) Slide the fork legs (5) downwards in order to remove turn indicators from above (Removing the light assembly).
Loosen the screws (2) securing the fork legs to the bottom yoke (4).
Slide the fork legs (5) downwards to carry out all the necessary overhaul operations.

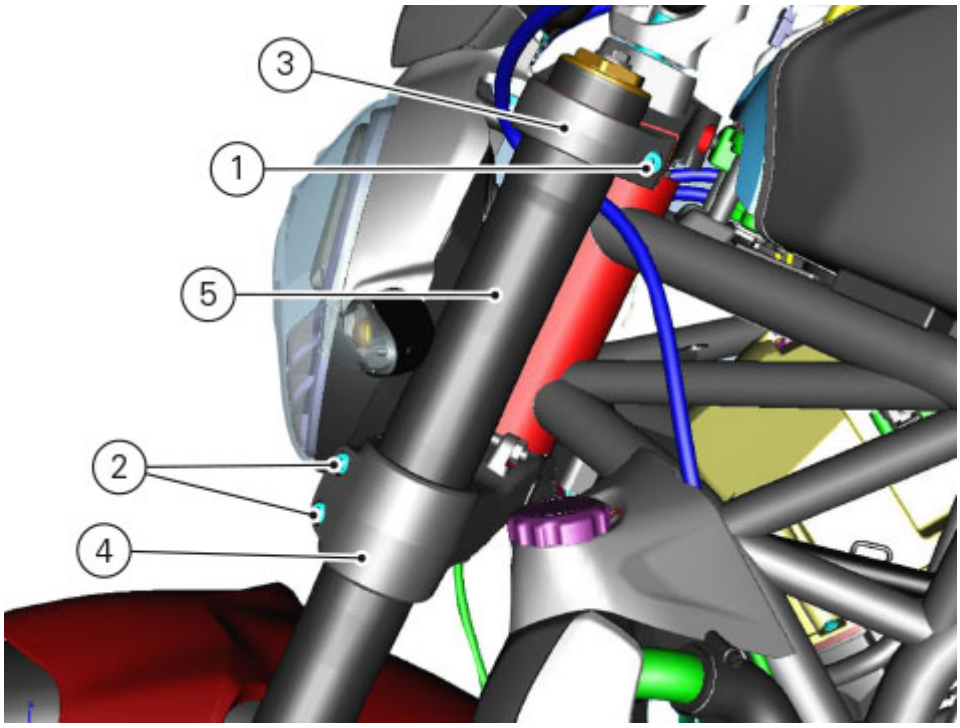

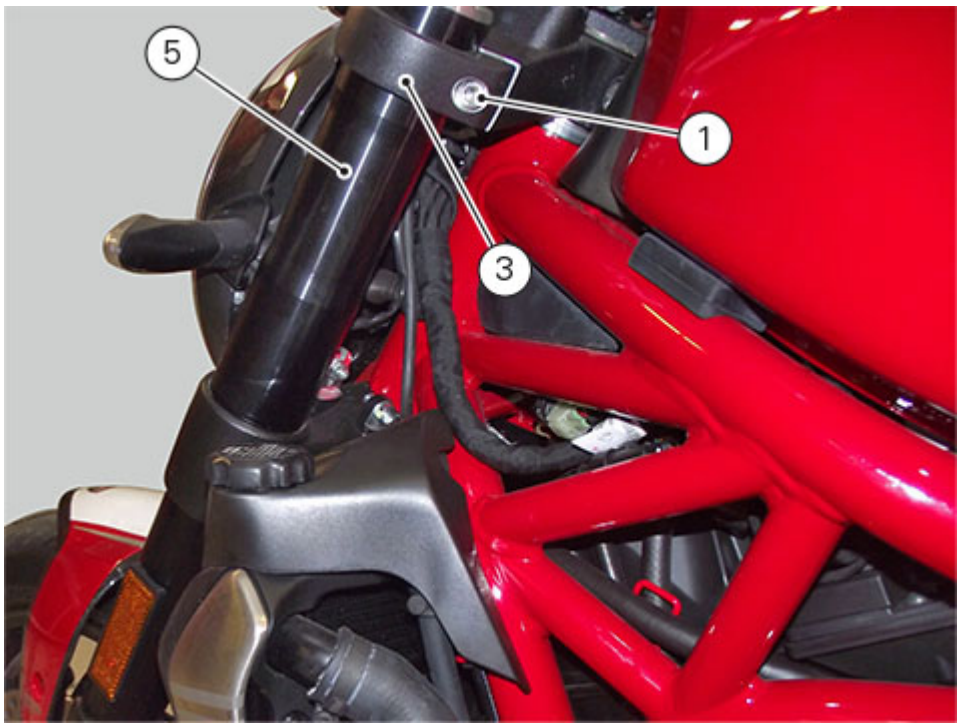

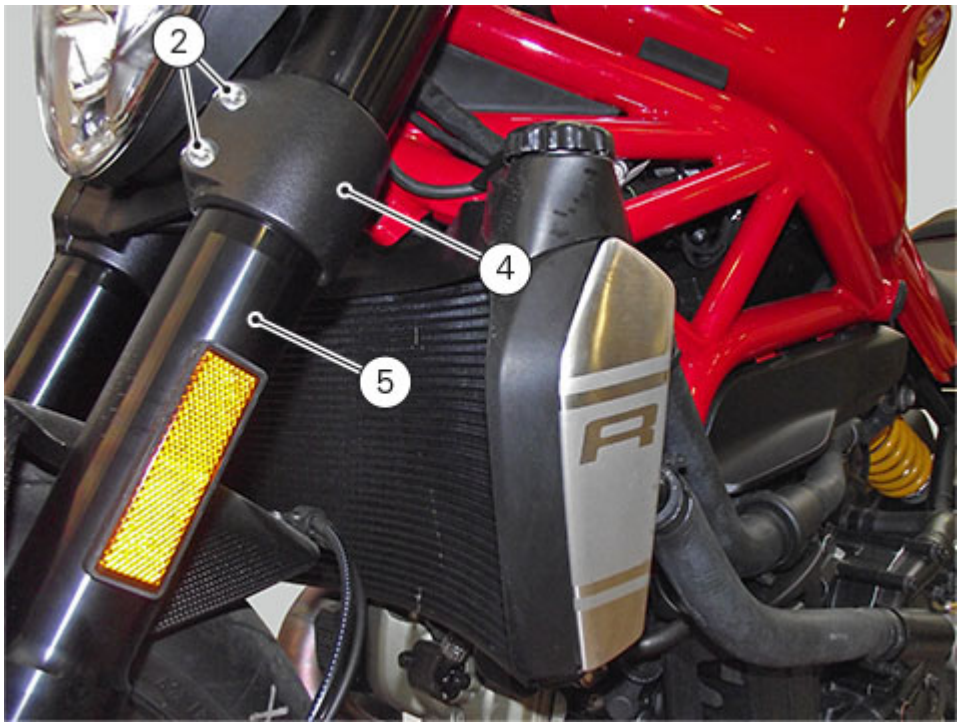
2
4
5

Refitting the steering tube components

Important

The steering tube bearings are identical but in no case may their components be swapped during refitting.

Clean all contact surfaces and lubricate with the recommended grease.
To fit the outer rings (8) of bearings (6) to the steering tube, use tool (D) no. **88713.1062**;
Proceed as follows:

- heat the steering tube to 150 °C;
- fit the outer rings (8) in their seats on the steering tube;
- fit the fixed bush (9) with threaded hole of the tool into the lower ring;
- fit the other movable bush (10) into the upper end of the tool and drive it fully home against the upper bearing race;
- tighten the nut (11), and use a wrench to seat the outer rings (8) fully in the steering tube;
- leave the tool fitted until the steering tube has cooled down to ensure that bearings are properly seated.

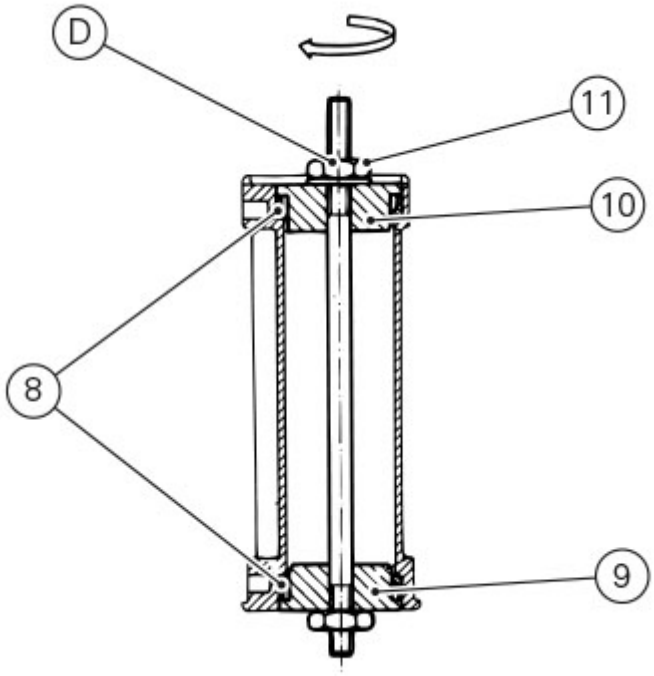

Insert the sealing ring (5) (with the rim facing upwards) and the inner ring (A) of the bottom bearing (6) onto the steering shaft after heating it for about 10 minutes to 120 °C.
Insert drift (E) part no. **88713.1072**.
Push the inner ring (A) on the sealing ring (5), manually pushing for at least 10-15 seconds.
Lubricate the inner ring (A) with the recommended grease.
Fit the ball race (B) on the steering shaft with the smaller diameter of the cage facing upwards, and grease the ball race.
Insert the steering shaft into the steering tube, and push it in until it is axially seated.

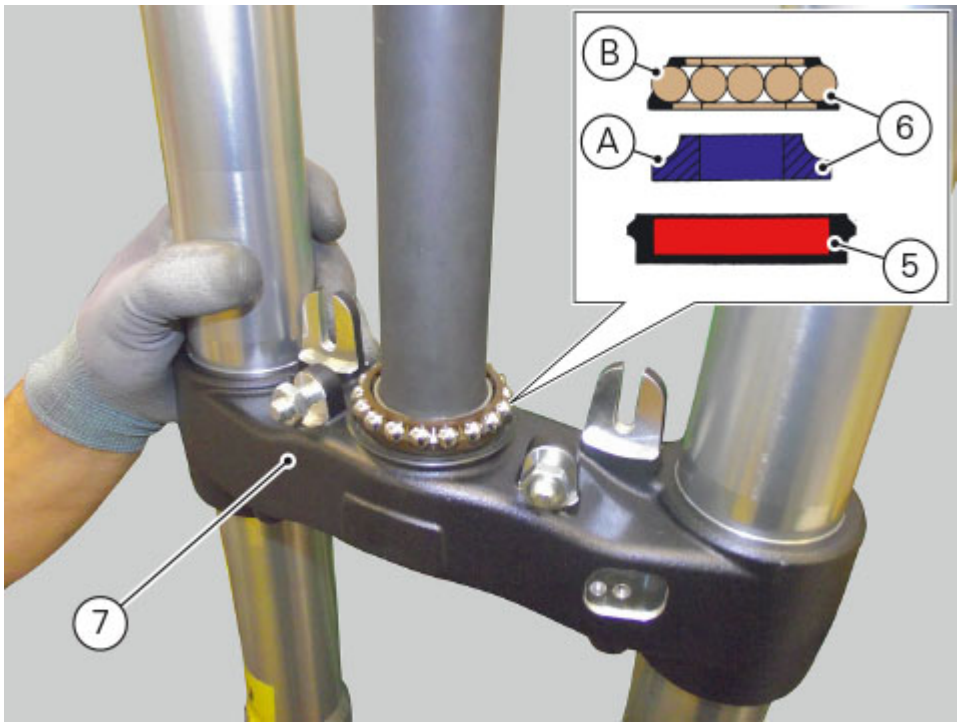

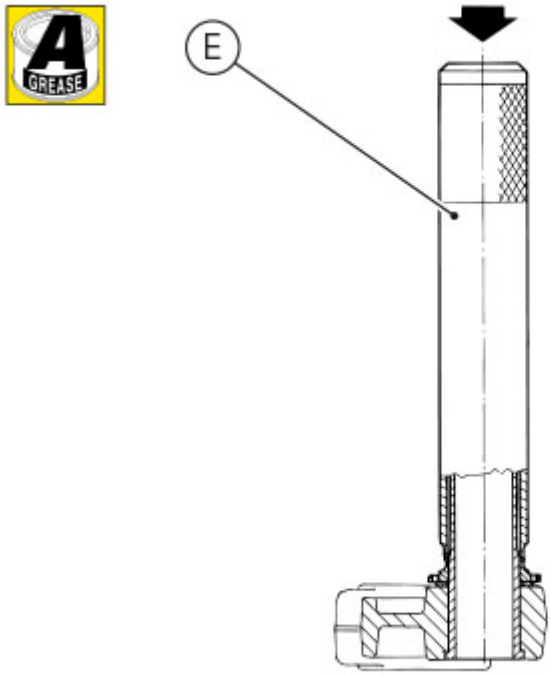

Fit the bottom yoke assembly to frame.
Grease the ball race (B) and fit it to the upper outer ring (8) of the frame.
Fit the inner ring (A) of the upper bearing (6) to the steering head, with the larger diameter side of the race facing upwards.
Install the sealing ring (5) with the flat side facing upwards.

Tighten the adjuster ring nut (3) by hand until it seats against the sealing ring (5).
Fit on ring nut (3) the special bush (C) part no. **88713.1058** and fit the torque wrench on it.
Apply recommended threadlocker on thread and tighten adjuster ring nut (3) to 30Nm±5%.

Fit the steering head (2) on the ring nut (3), aligning the fork leg seats with the corresponding seats on the bottom yoke.
Refit the fork legs. Grease screw (1) with the specified product.
Tighten screw (1) on steering head to a torque of 18N ±5%.

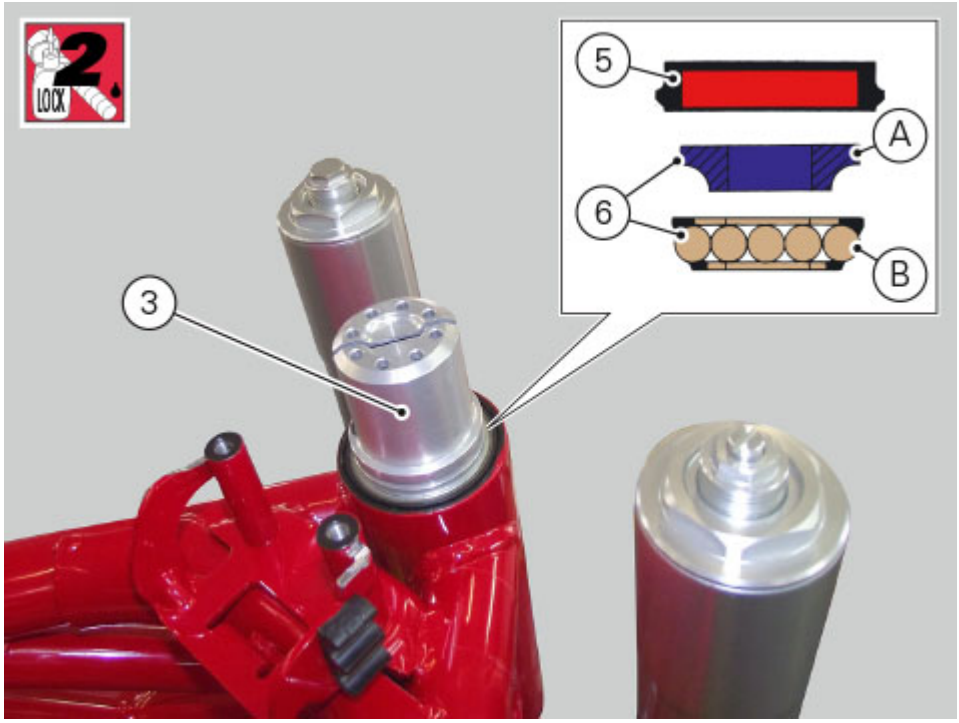

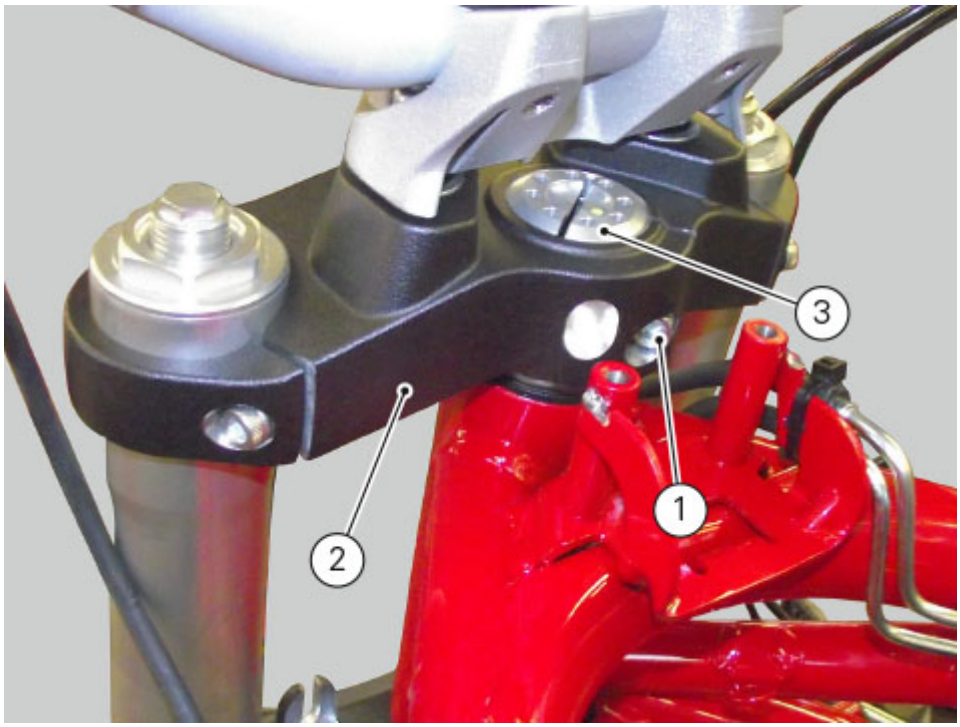

Refit the handlebar and the U-bolts (Refitting the handlebar).
Refit the light assembly (Refitting the light assembly).
Refit turn indicators (USA VERSION, ONLY) (Refitting the light assembly).
Refit the front wheel (Refitting the front wheel).
Refit tank and ignition switch (Refitting the fuel tank).

Removing the steering tube components

Remove the front brake callipers (Removing the front brake system).
Remove the front wheel (Removing the front wheel)
Remove ignition switch and tank (Removing the fuel tank).
Remove fork legs (Removing the front fork).
Remove turn indicators (USA VERSION, ONLY) (Removing the light assembly).
Remove the light assembly (Removing the light assembly).
Remove the handlebar and the U-bolts (Removing the handlebar).

Warning

All parts fitted to the steering head and bottom yoke, including wiring and hoses, can remain on the motorcycle provided they do not hinder the following operations.

Loosen the screw (1) securing the steering head (2) to the ring nut (3).
Remove the steering head (2).



With tool (C) part no. **88713.1058** loosen the ring nut (3) and unscrew it from the steering shaft.
Slide the sealing ring (5), the inner ring (A) and the ball race (B) of the upper bearing (7) off the steering shaft.

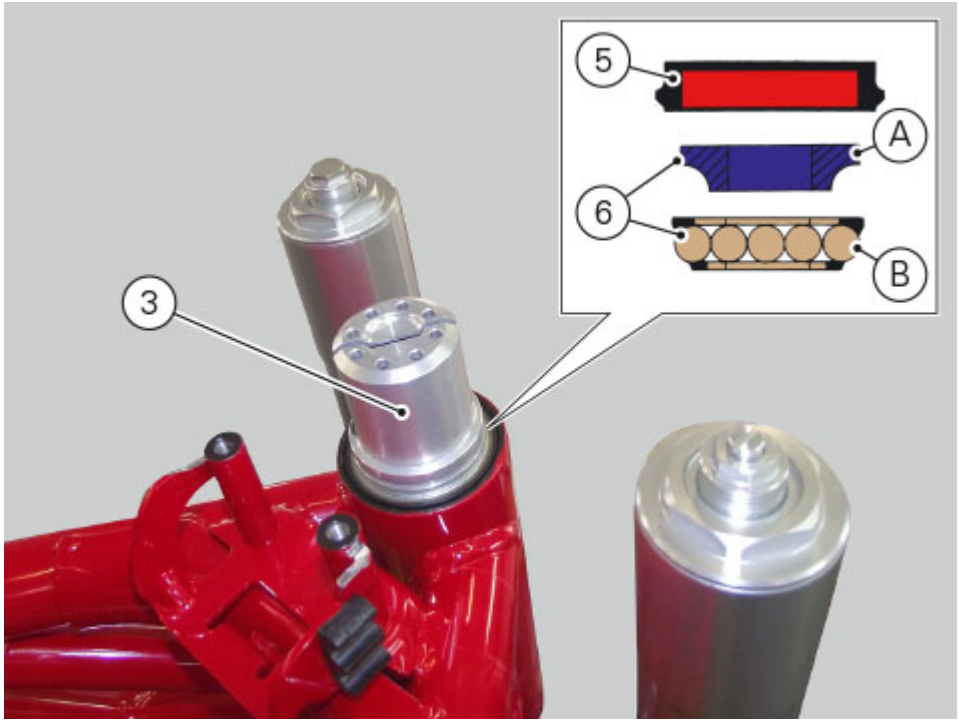

Remove the bottom yoke (7) complete with the steering shaft from the frame tube.
Remove the ball race (B) of the lower bearing (6).
The inner ring (A) of the lower bearing (6) and the sealing ring (5) will remain on the steering shaft.

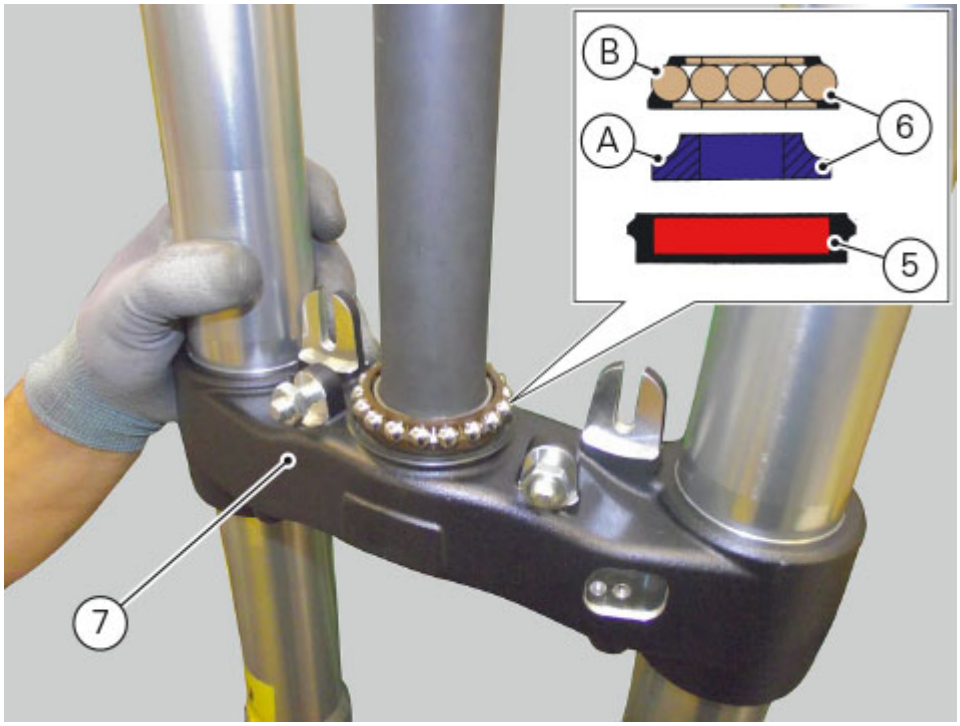

Using a universal puller (see figure), remove the inner ring (A) from the steering shaft, taking care not to damage the seat.

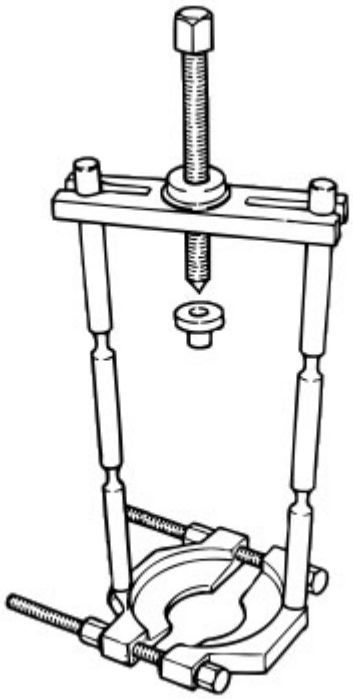

Important

The removed seals and bearings shall not be reused and must be replaced with similar new components.

Using a suitable punch, remove the outer bearing races (8) from the steering tube. Proceed with extreme care to avoid damaging the seats.

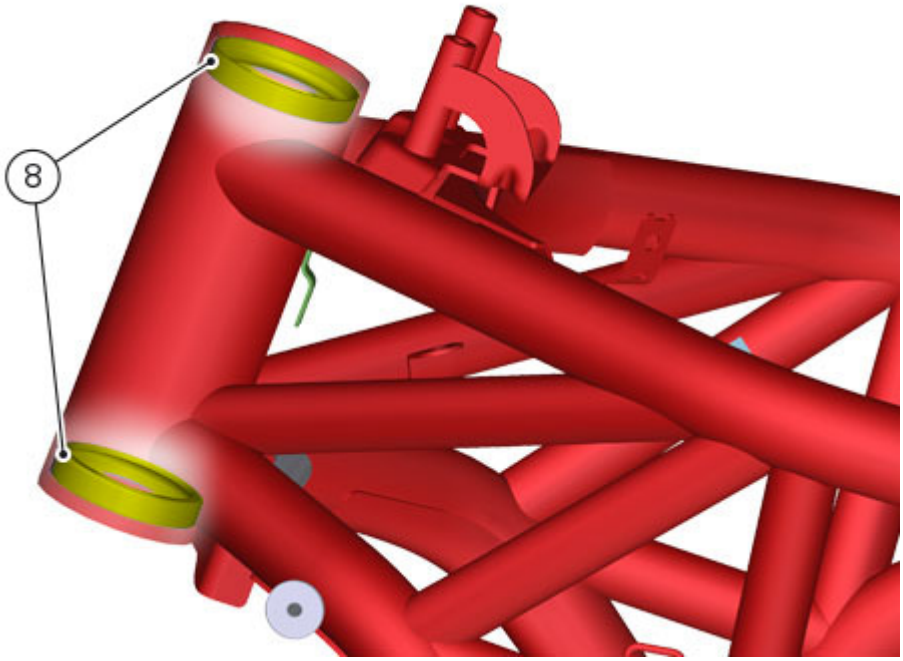

Steering angle adjustment

Loosen the nuts (2).

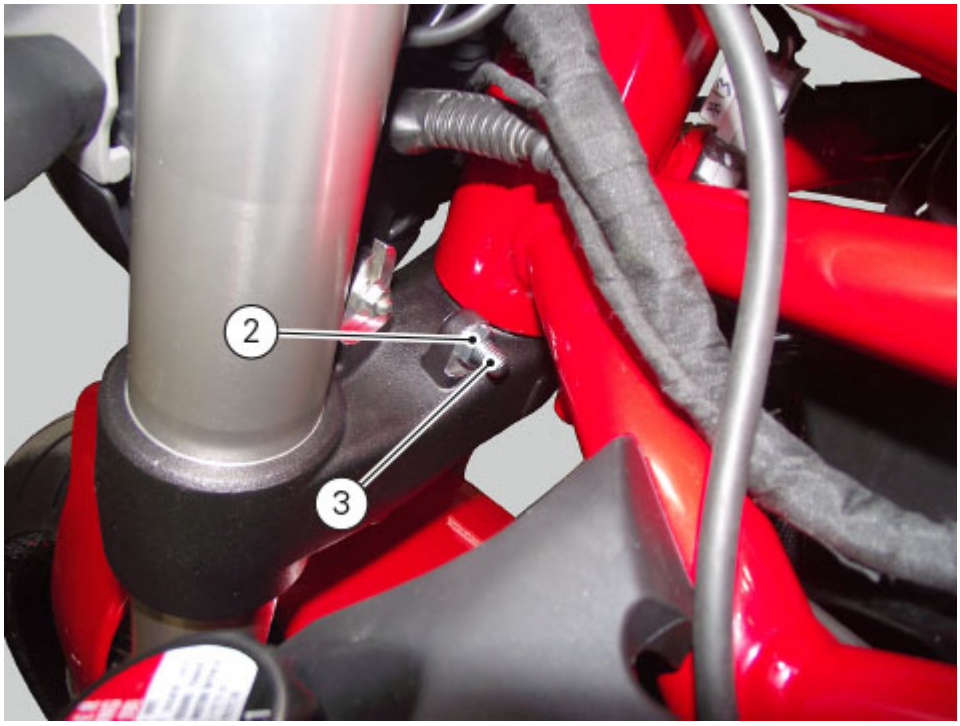

Start the nuts (2), fully home (without tightening) on the steering angle adjuster dowels (6), starting them on the opposite side with respect to the wrench.
Tighten steering angle dowels (3) on bottom yoke, until obtaining position (A) equal to (9±0.5) mm.
Tighten nuts (2) so as they are centred with respect to the thread in view of the steering angle adjuster dowels.

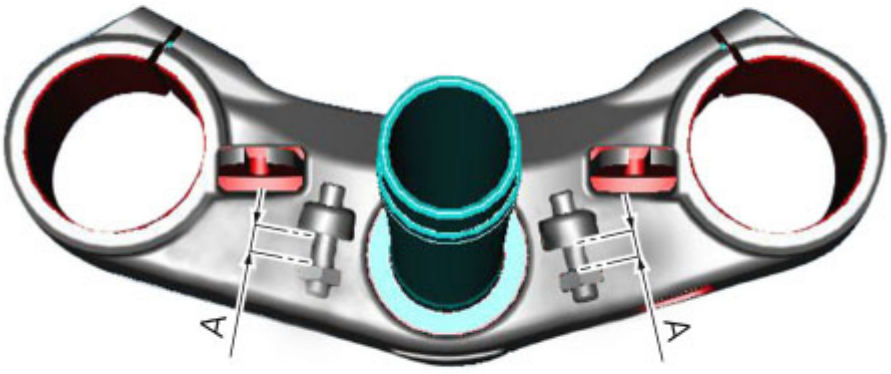

Adjusting the steering head bearing clearance

Adjust steering head bearing clearance as explained under section "Adjusting the steering head bearing clearance" of chapter "**Maintenance operations**".

If the problems found are not solved, check the wear of steering bearings (1) and replace them, if necessary, as described in paragraph "Removing the steering tube components".

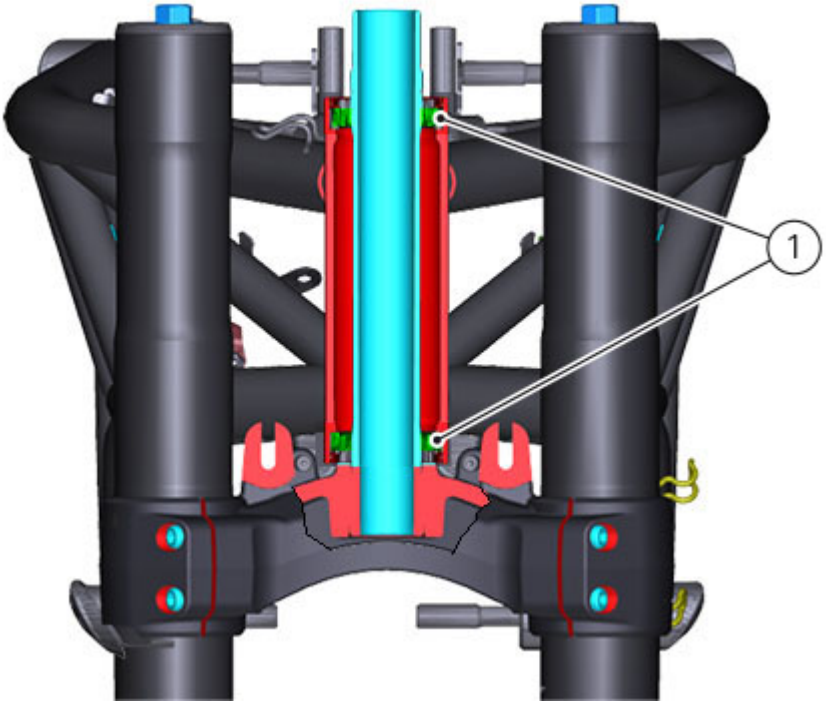

Refitting the steering damper

If previously disassembled, re-assemble the steering damper (A) by tightening the uniball (B) on rod (C) to a torque of 10Nm±10%, after having applied the indicated product.
If previously removed, apply the indicated product on ignition switch cover (10) special retaining nuts (9), then tighten them to a torque of 10Nm±10%.

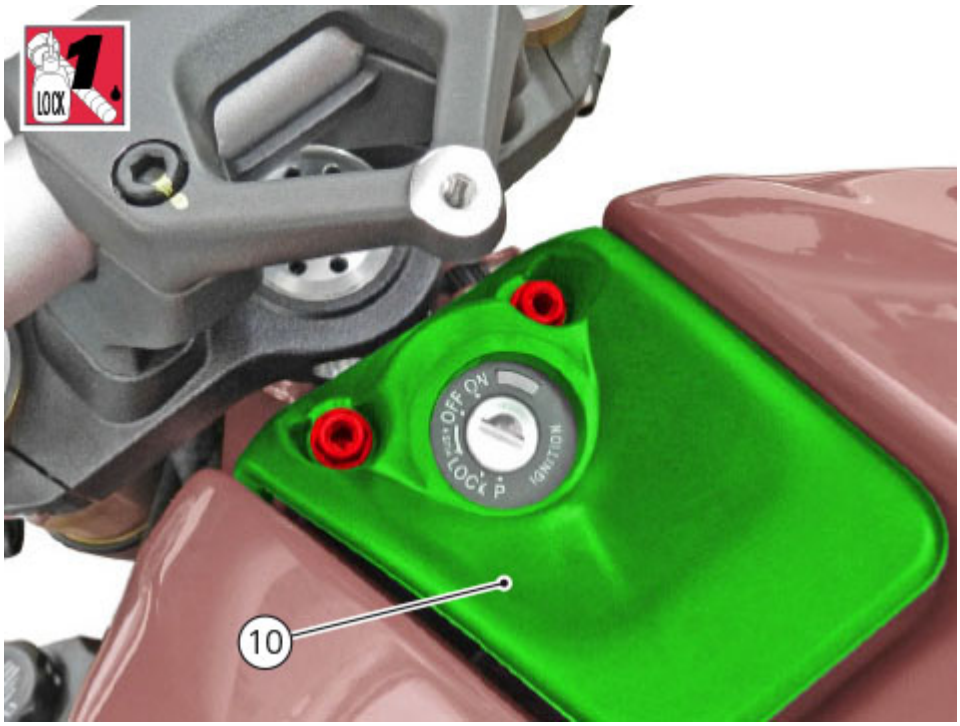

Position steering damper support bracket (8) and, after applying the specified product, tighten the two screws (7) to a torque of 8 Nm±10%.

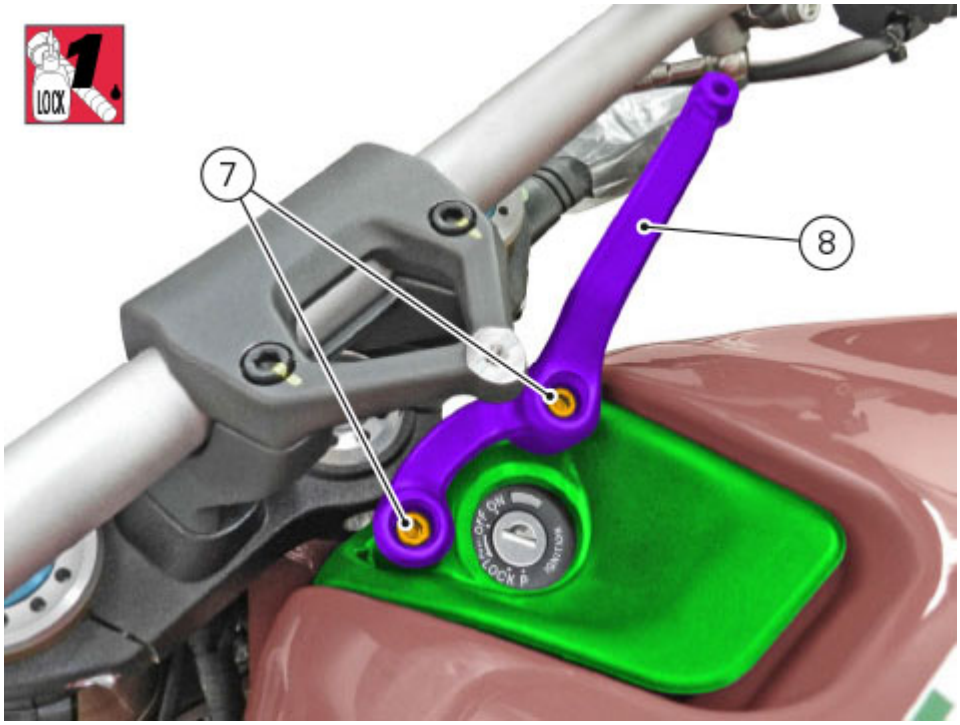

Position steering damper and tighten screw (3) to a torque of 10Nm±10% after having positioned the two O-rings (6), the lower countersunk head spacer (4) and the upper spacer with collar (5).

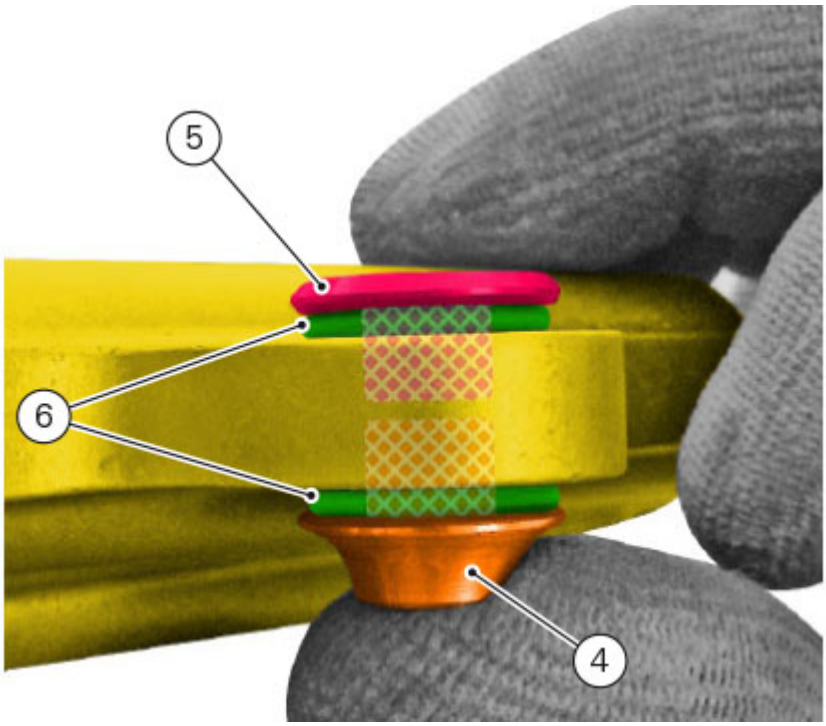

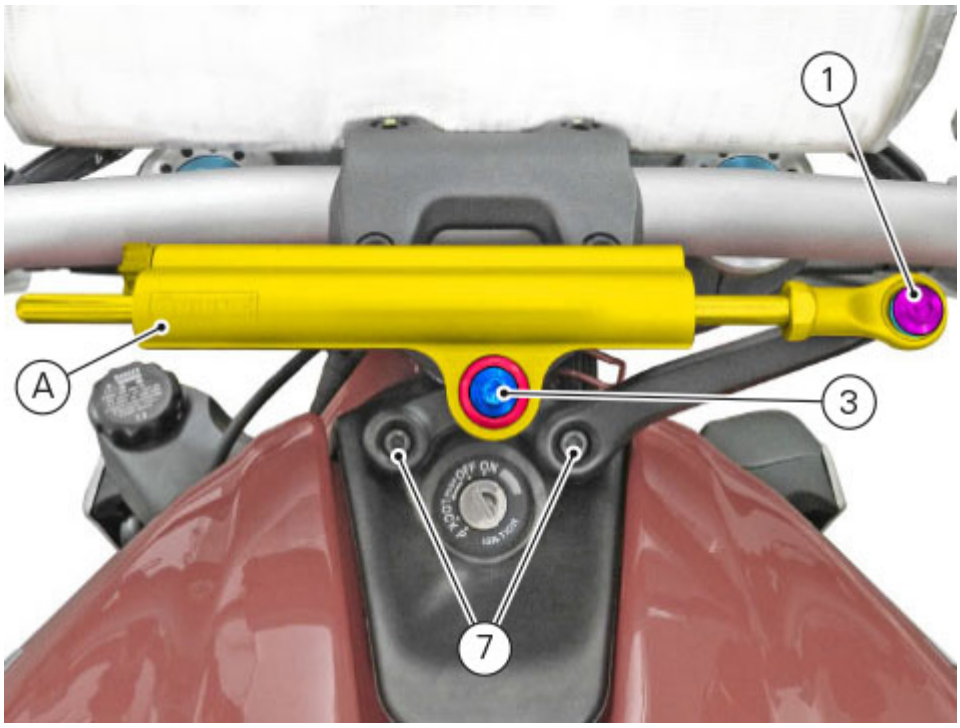

Then position washer (2) and secure steering damper (A) in place with screw (1).

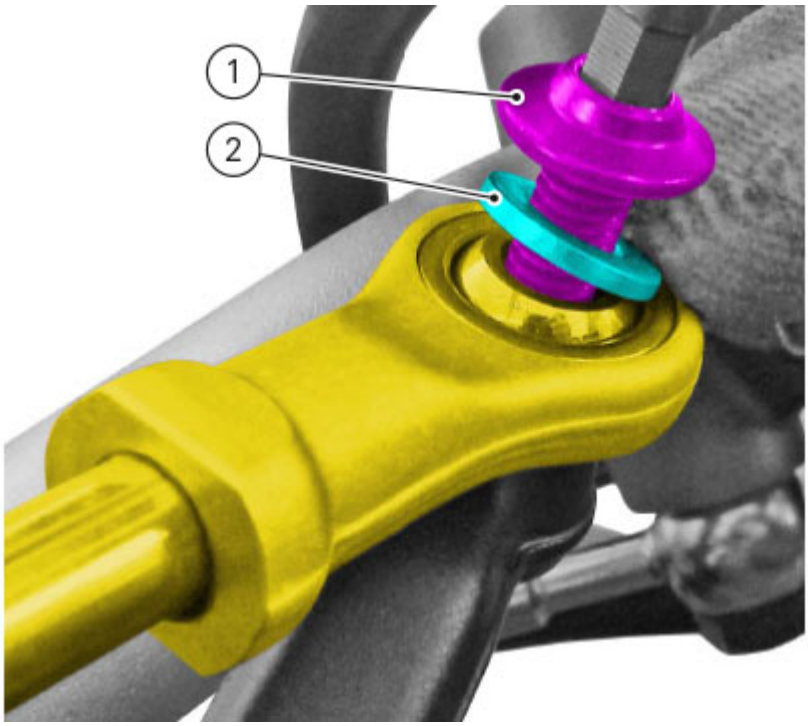
1
2

Removing the steering damper

Loosen screw (1) and collect washer (2).

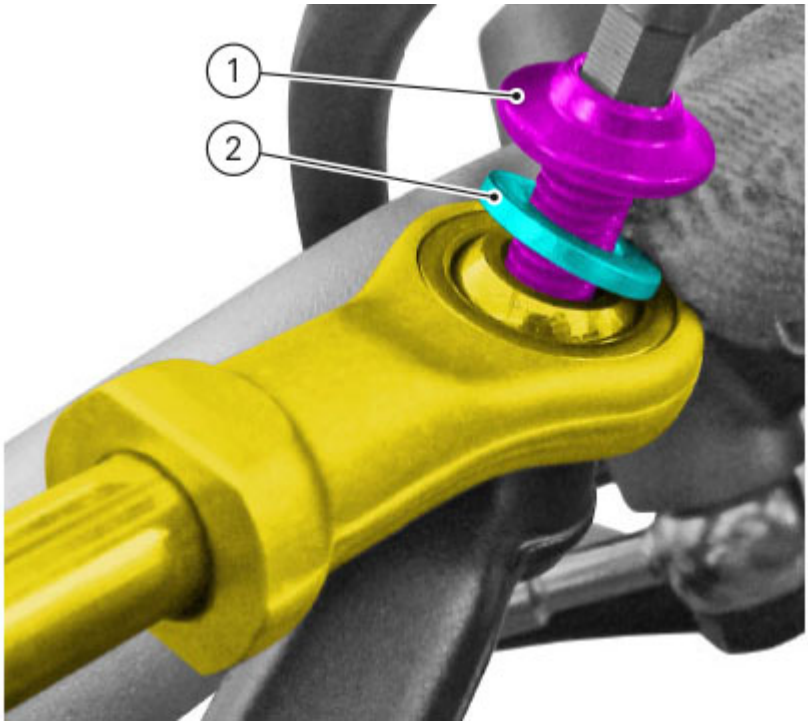

Remove central screw (3) of the steering damper (A).
Collect lower countersunk head spacer (4), upper spacer with collar (5) and the two O-rings (6).

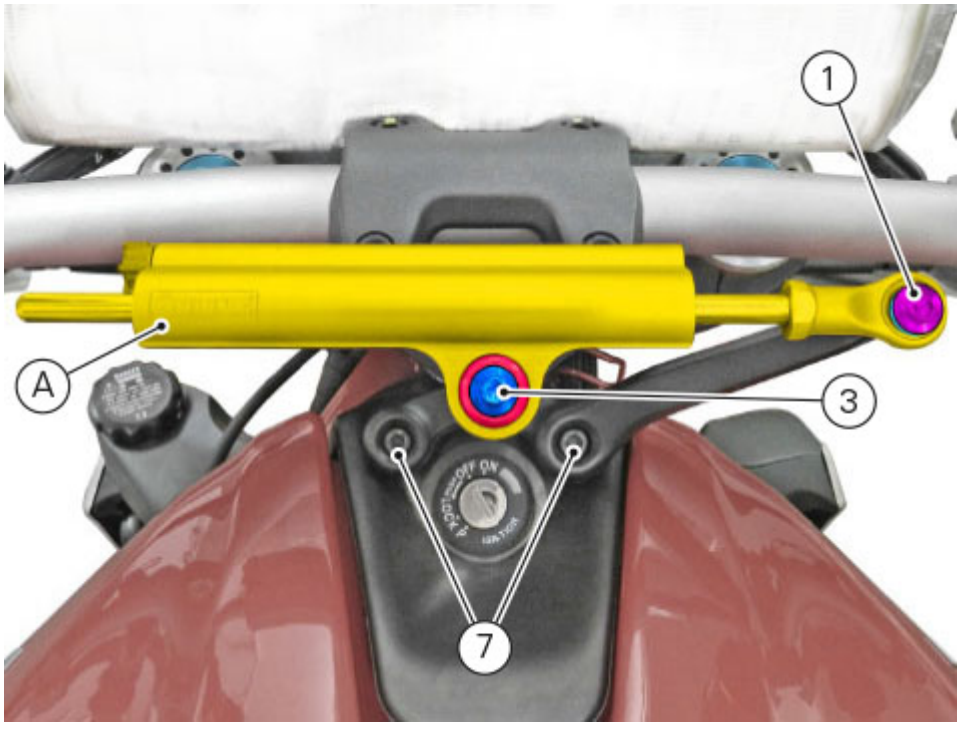

Remove the two screws (7) on steering damper bracket (8).

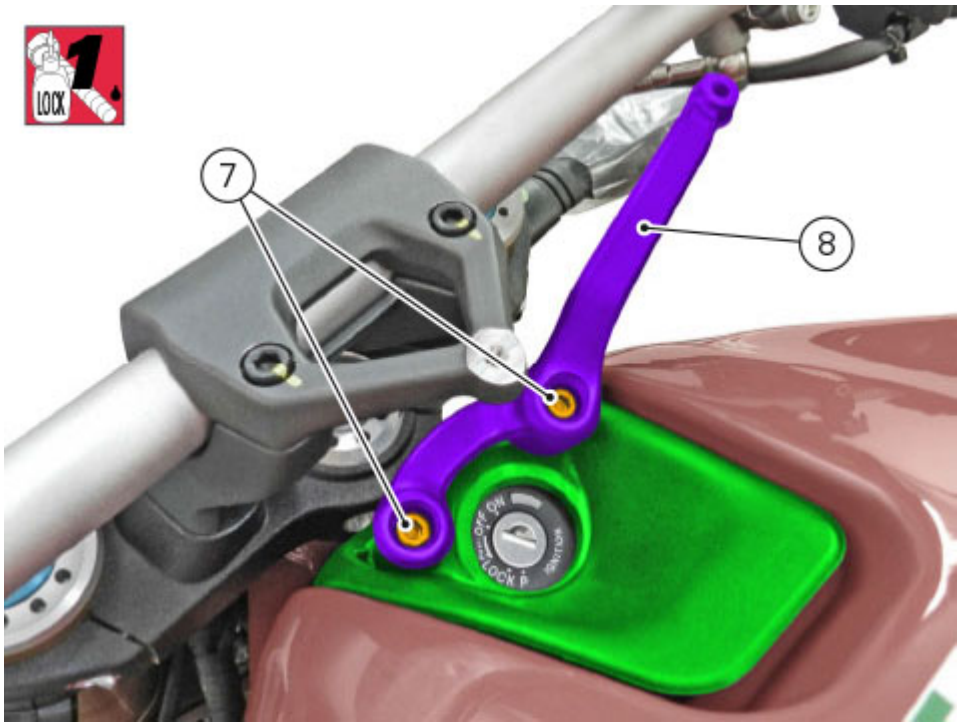
LOCK
1.
7
8
OFF ON
LOCK P
IGNITION

Refitting the rear suspension

Apply the specified product on thread and underside of top screw (2) and bottom screw (4).
Insert the shock absorber upper part inside vertical head support by starting screw (2)
Insert the shock absorber lower end inside swinging arm by starting screw (4).
Tighten screws (2) and (4) to the specified torque of 42Nm±5%.

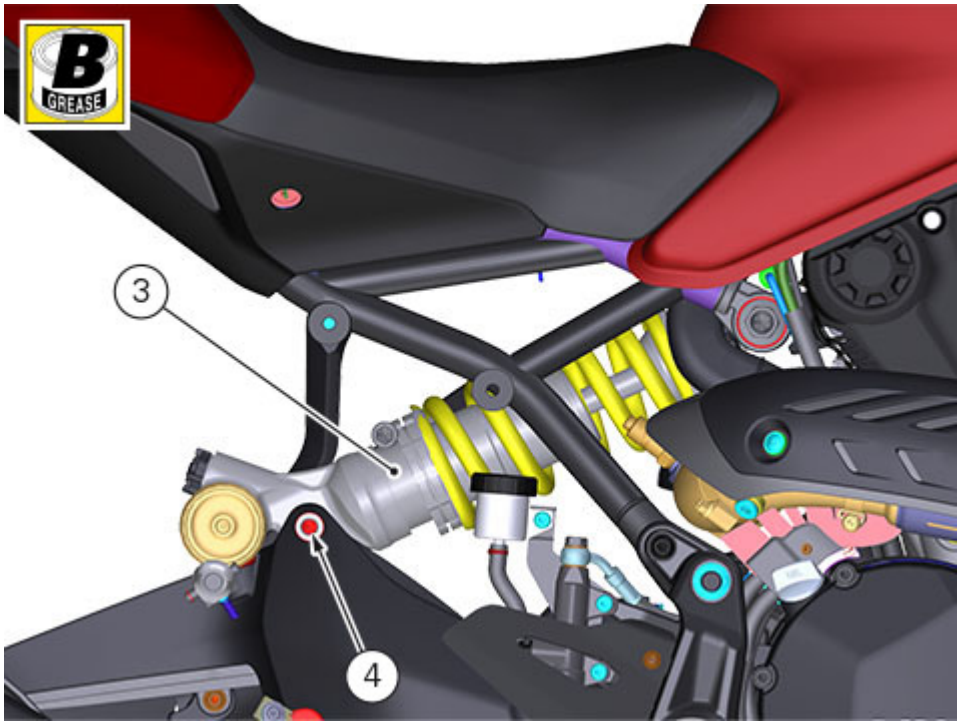

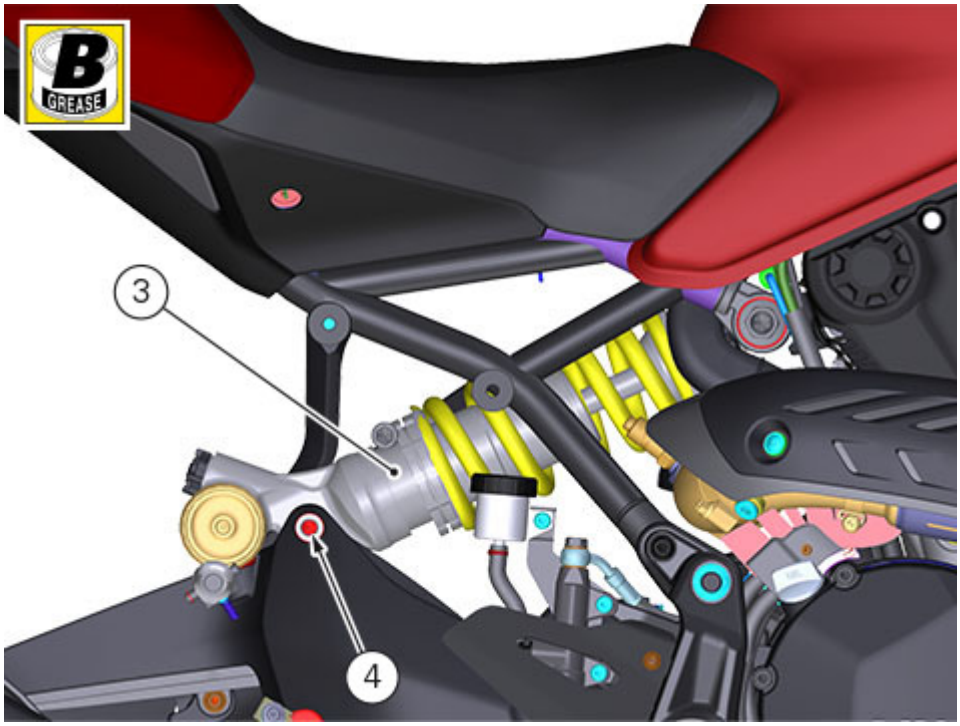

Working on both sides, tighten the screw (1) applying the specified product, and tighten it to a torque of 150Nm ±5%.

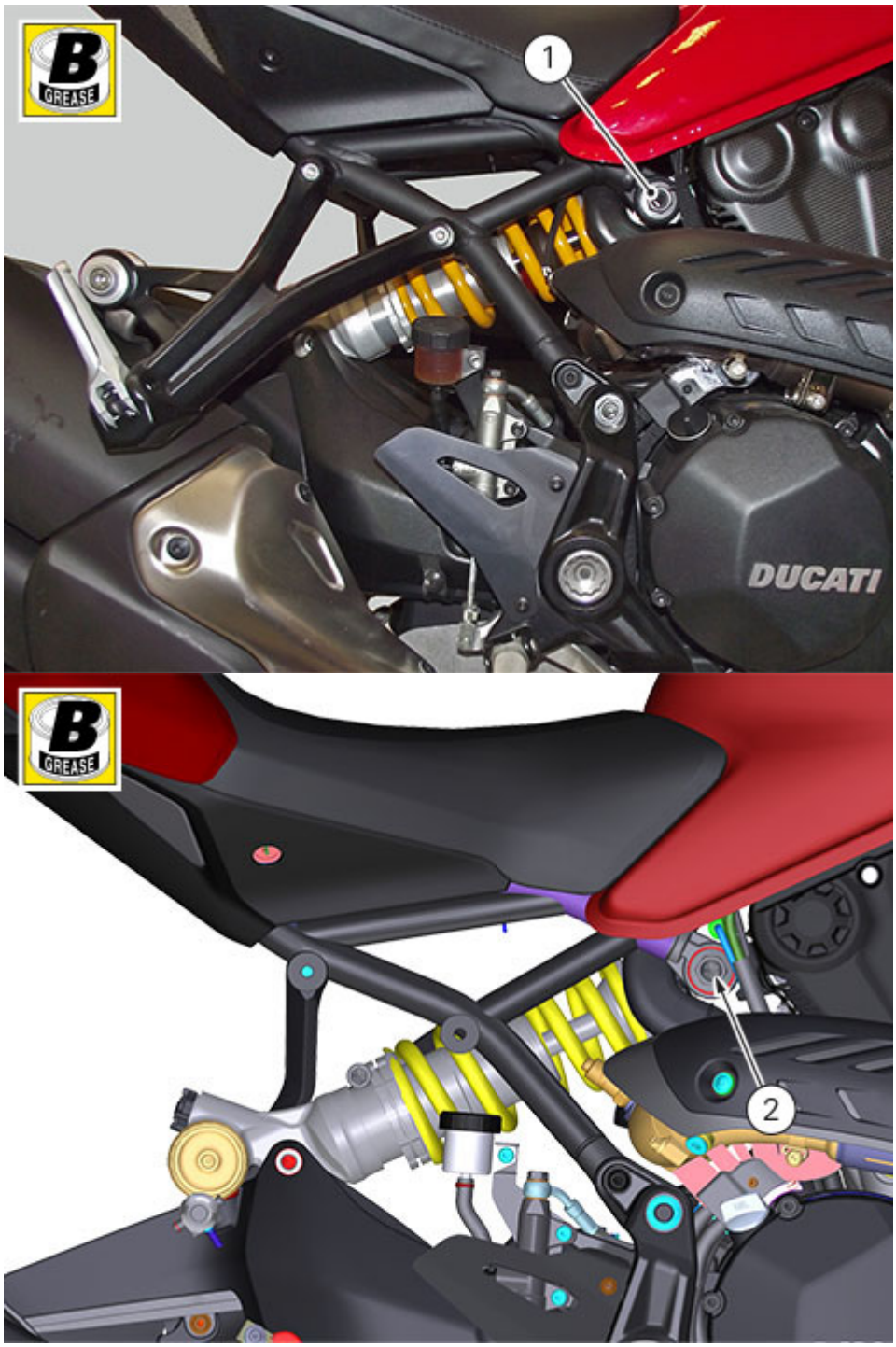

Refit the exhaust silencer (Refitting the silencer).
Refit the rear RH footrest support (A) (Refitting the footrest holder plate).

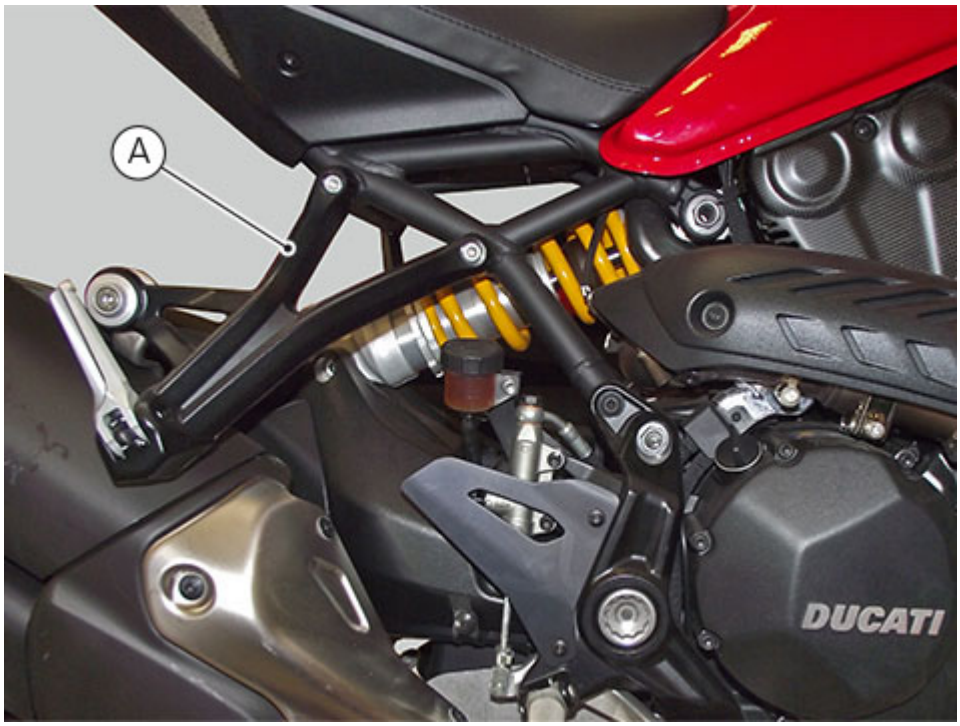
A
DUCATI

Overhauling the rear shock absorber

Spring preload

A Spring free length = 170 mm
B Length of installed spring = (158±1.5) mm
A - B Spring preload = 12 turns

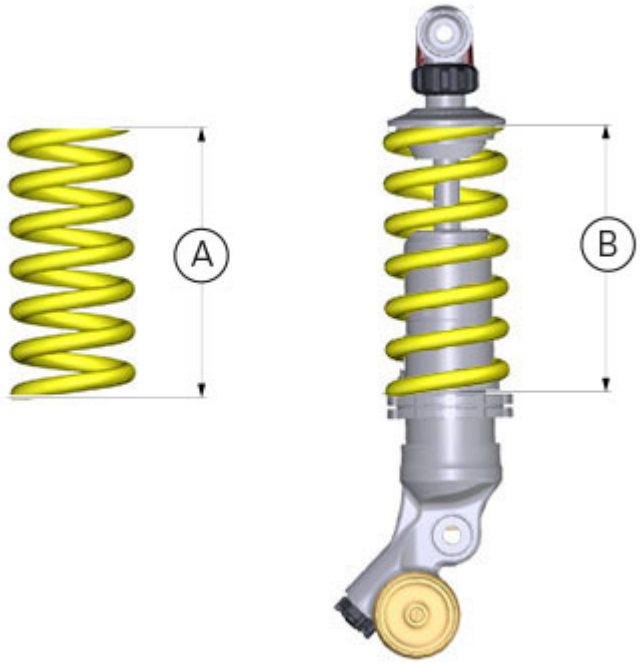

To adjust the spring preload, move the spring seat.
This will decrease or increase the initial spring force, which will lower or raise the motorcycle rear ride height.
The spring preload is fundamental for the suspension correct operation.
If the preload is incorrectly set, any other adjustments will not help to get the intended performance from the suspension

How to Set the Spring Preload

Mechanical Adjuster

Use a C-spanner.
Loosen lock nut (7).
Move the lower spring ring nut (8) to the required position.
Turn clockwise to increase the preload, turn counter clockwise to decrease it.

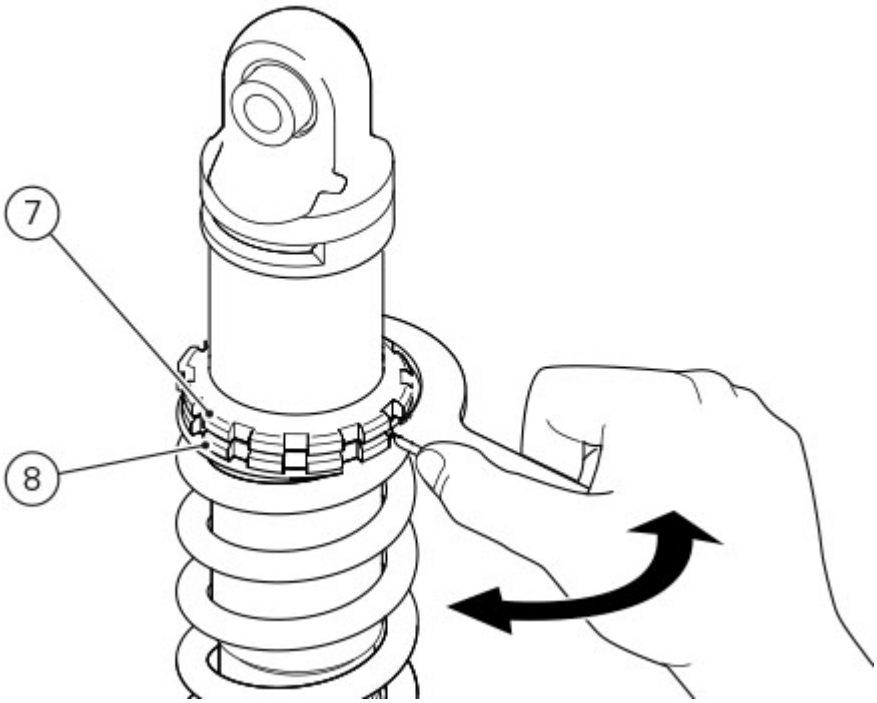
7
8

Removing the rear shock absorber

Remove the rear RH footrest support (A) (Removing the footrest holder plate).



Remove the exhaust silencer (Removing the silencer).
Support the rear side of the vehicle in a suitable way.
Working on both sides, loosen and remove special retaining screw (1) on rear subframe.



Loosen and remove the upper retaining screw (2) on rear shock absorber (3).

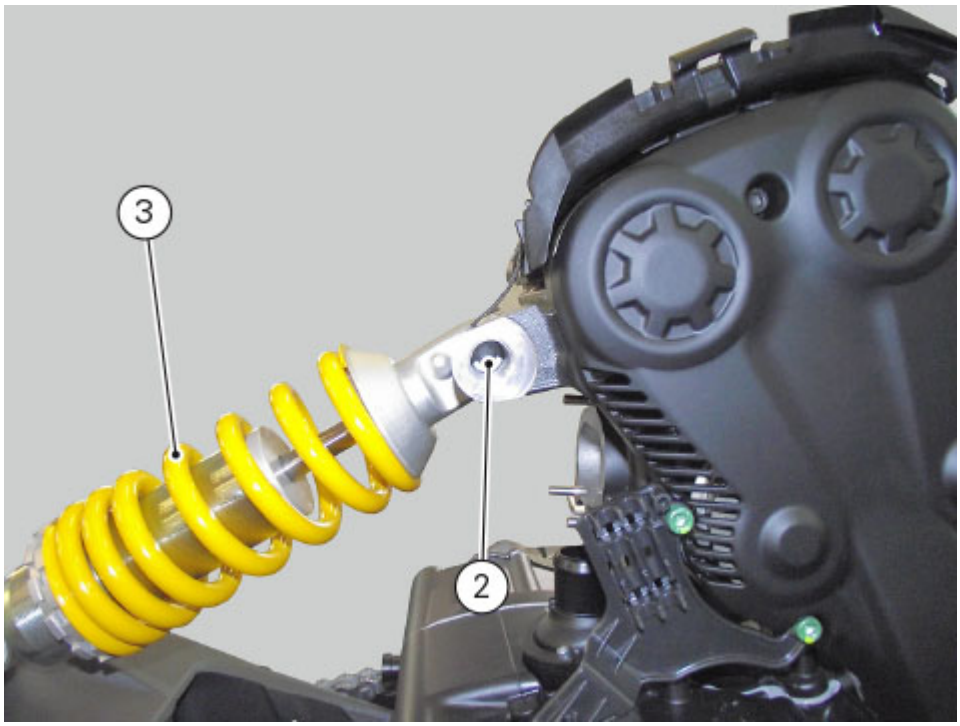

Loosen and remove lower screw (4) and slide out rear shock absorber (3).

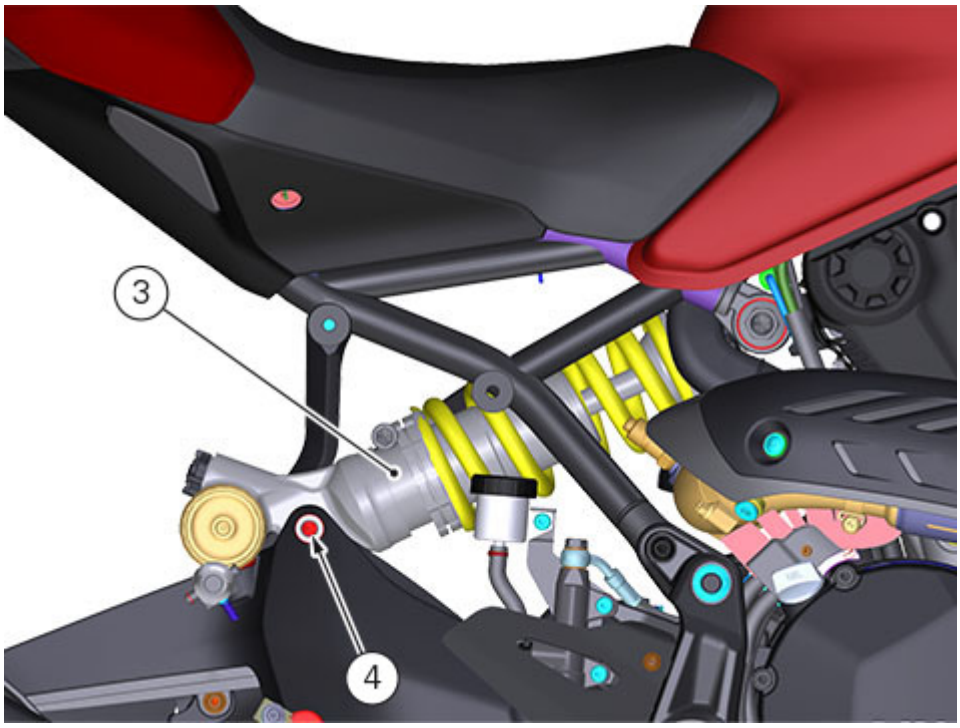

Rear suspension system

The rear suspension system uses a hydraulic monoshock absorber (1) that is completely adjustable.
Shock absorber pivots onto the swinging arm at the bottom and onto the vertical head at the top. The whole system gives the motorcycle excellent stability.
For rear shock absorber adjustment, refer to Section "Adjusting the rear shock absorber".

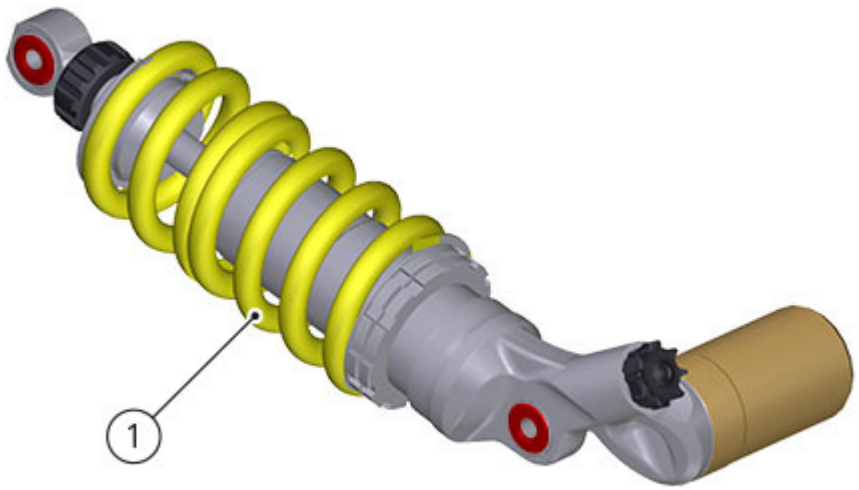

Refitting the rear swinging arm

Working on swinging arm left side, lubricate roller bearing cage seat with the specified product.
Using a suitable tool, insert the two roller bearing cages (20) and seals (21).

Warning
Roller bearing cages must be inserted so that the marks are facing outwards.

Warning
Seals must be inserted with the flat surface facing outwards.

Lubricate roller bearing cage inner surface (20) with the specified product.
Insert left bush (19) from swinging arm inner side and remove any excess grease coming out of roller bearing cages.

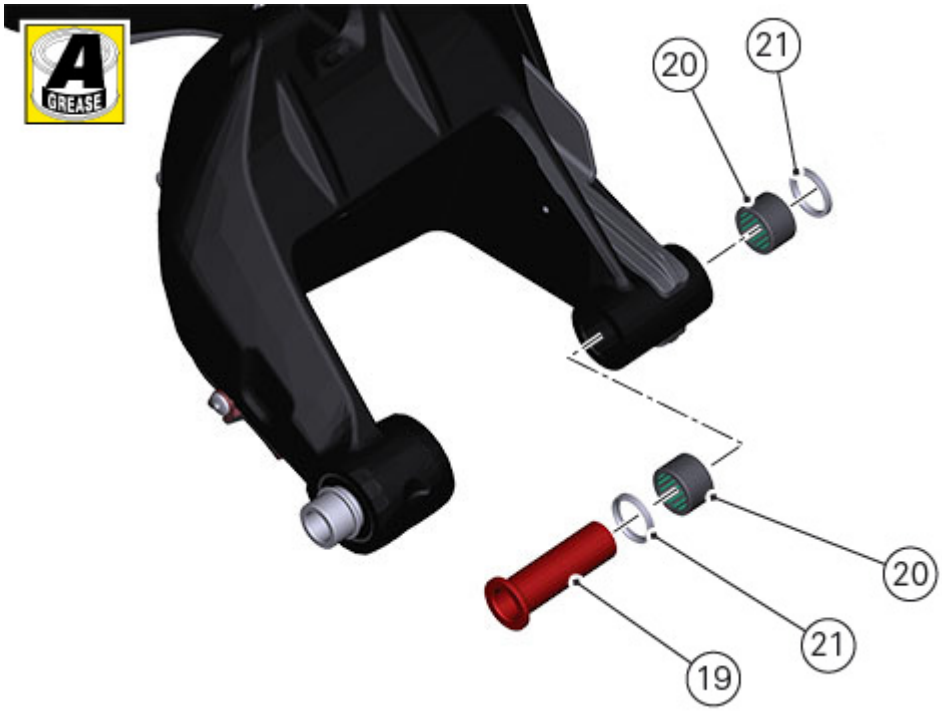

Working on swinging arm right arm, lubricate bearing seats with the specified product and insert inner spacer (23) and the two bearings (22) with a suitable tool.



Fit splash guard (24) by tightening screw (25) to a torque of 5Nm.



Fit lower chain guard (27) by starting screws (29) and (33) and tightening them to a torque of 5Nm.

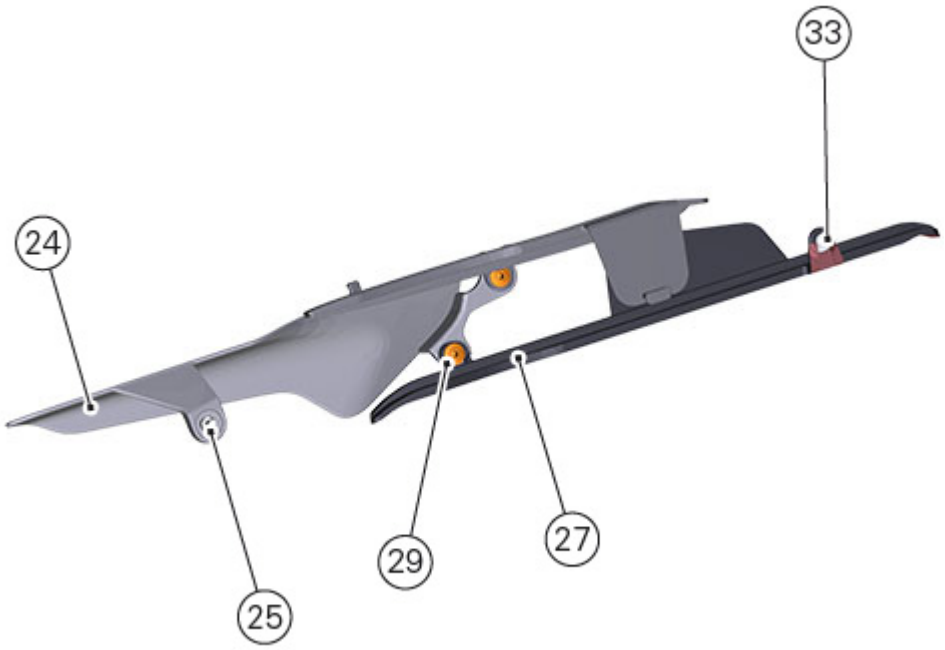

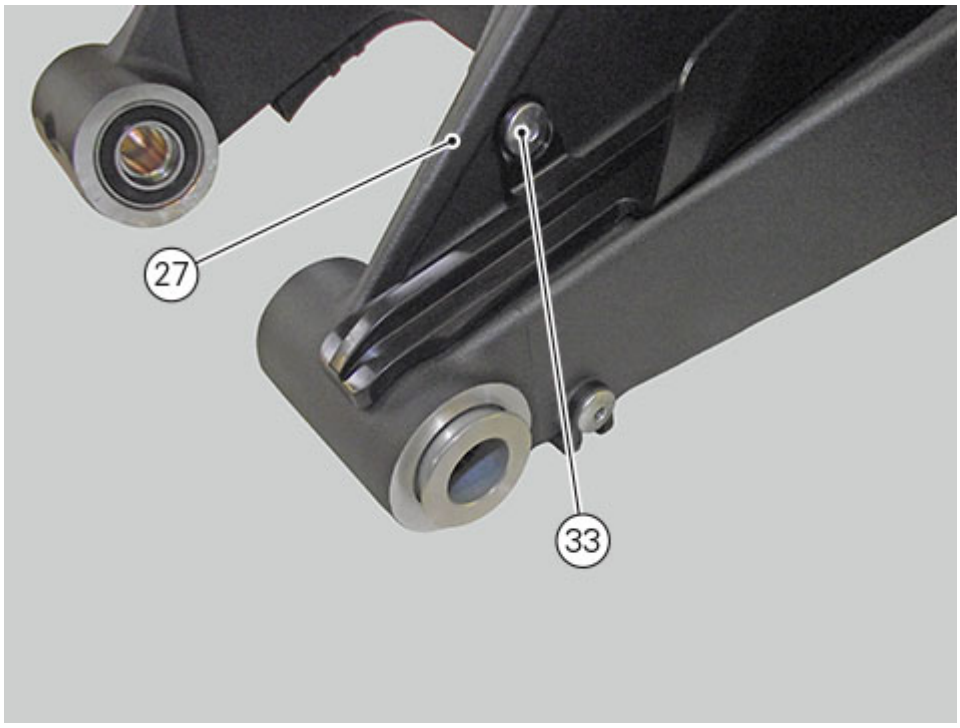

Engage chain guard (32) tabs (26) and (30) inside swinging arm.

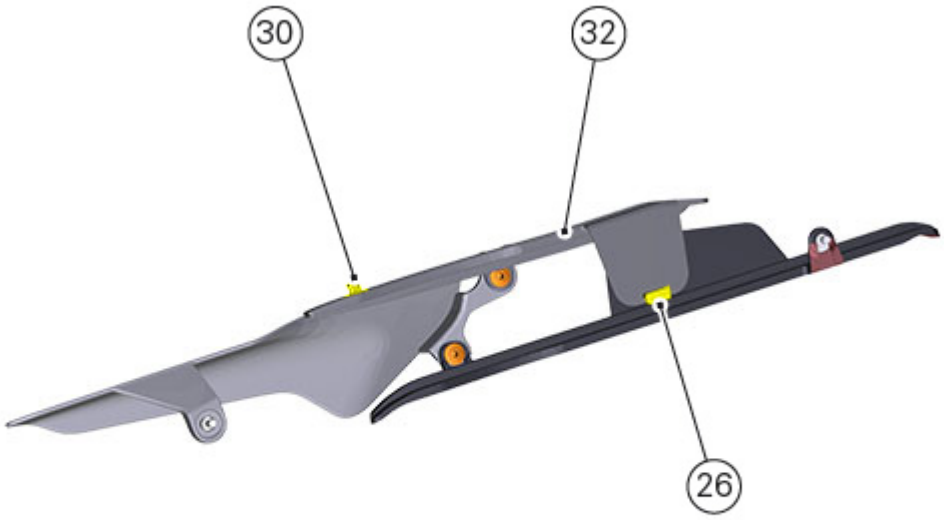

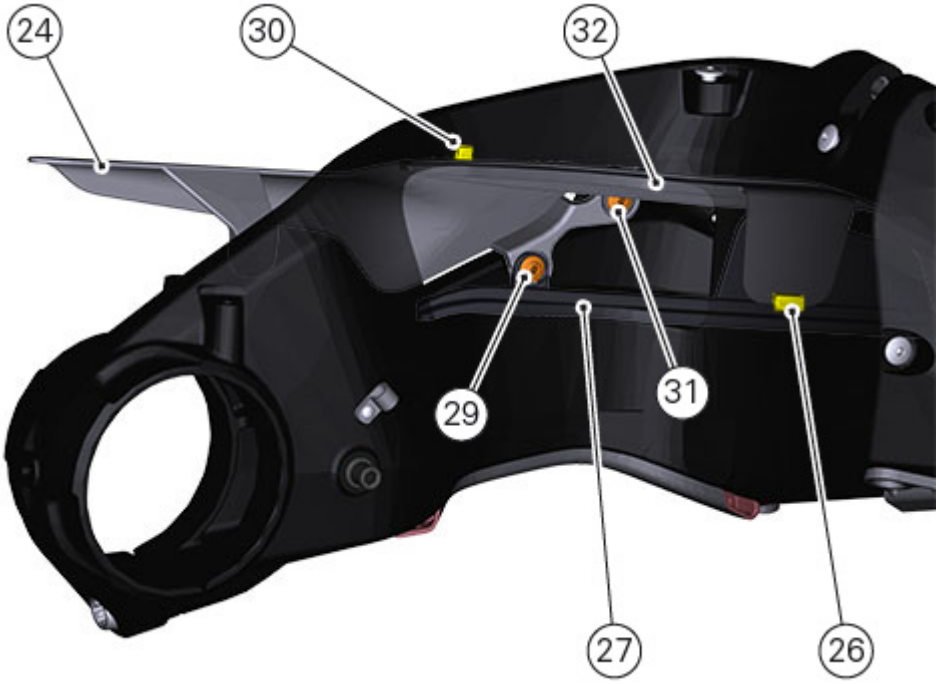

Position swinging arm on engine and secure it in place with pin (18), to be inserted from the left side.

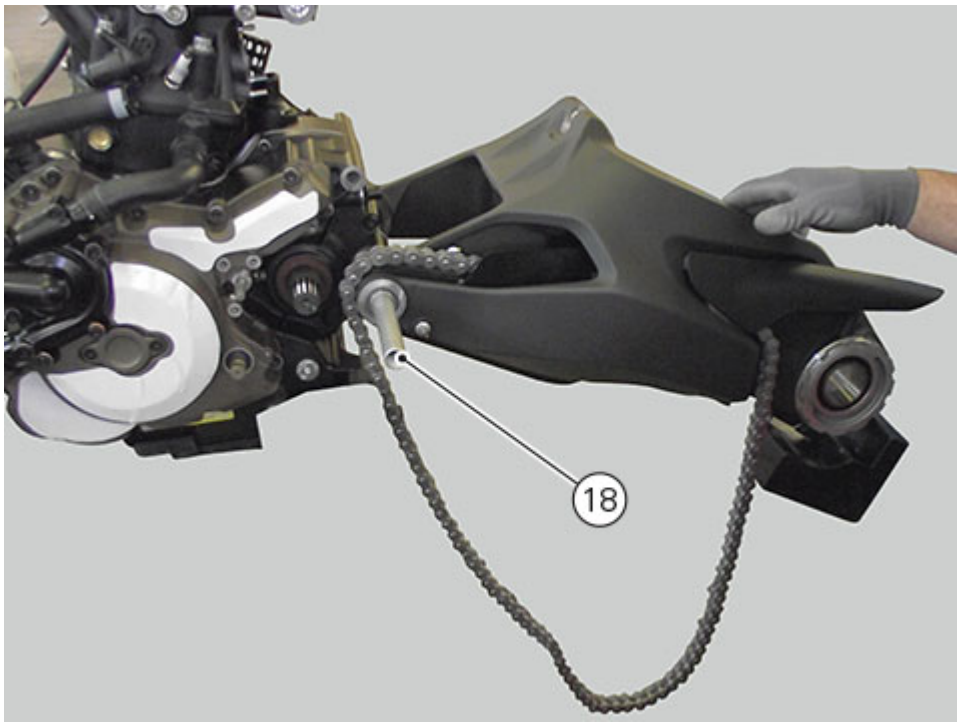

Working on both sides, insert the two spacers (16).

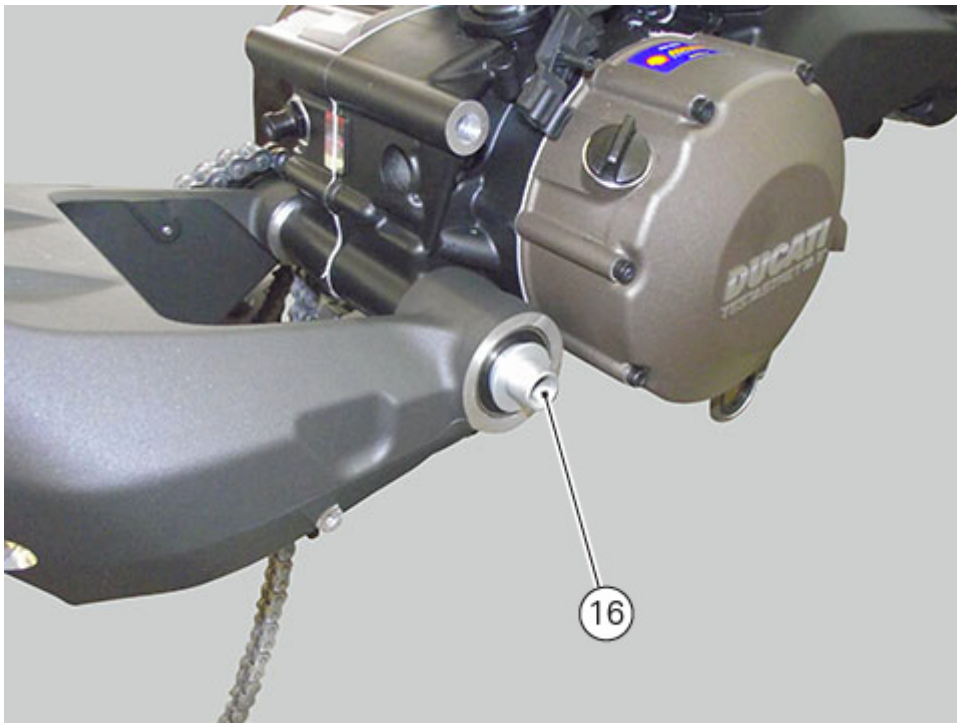

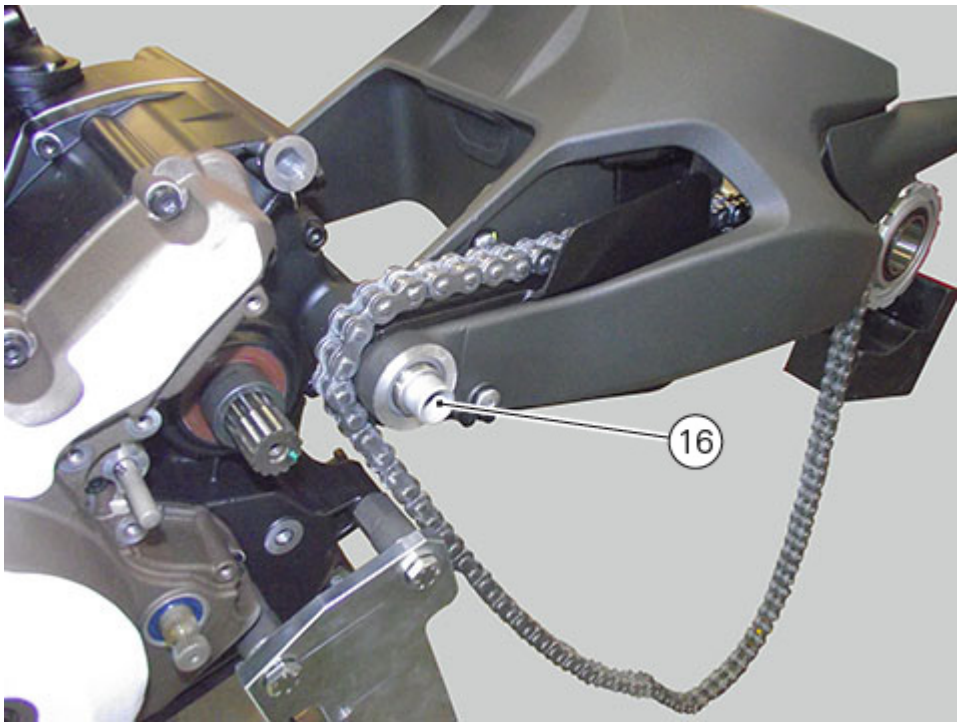

Refit the RH and LH footpeg holder plates (Refitting footpeg holder plate).
Refit the rear brake system (Refitting the rear brake control).

Inspecting the swinging arm shaft

Before refitting the swinging arm shaft (8), check it carefully for distortion.
Turn the shaft on a reference surface and measure distortion using a feeler gauge.
Replace swinging arm shaft (8) if the measured value is different from the one specified in section (Rear wheel).

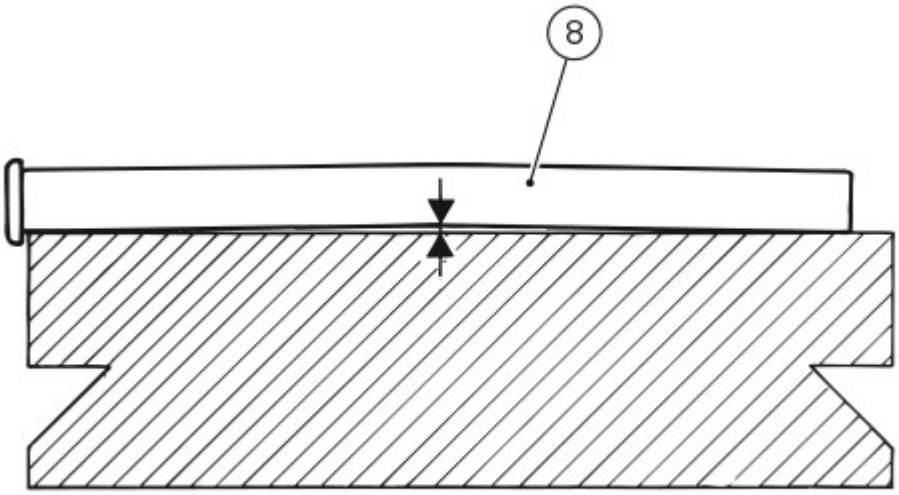

Removing the swinging arm

Before removing the concerned parts, you must first carry out the following operations.
Remove the footpeg holder plates (Removing the footpeg holder plates).
Remove the exhaust silencer (Removing the silencer).
Remove the rear wheel (Removing the rear wheel).
Remove the rear sprocket (Replacing the rear sprocket).
Remove the rear brake calliper (Removing the rear brake calliper).
Release the rear shock absorber bottom part (Removing the rear shock absorber).
Remove the rear eccentric hub (Removing the rear wheel eccentric hub and the rear wheel shaft).

Undo screw (1) of the speed sensor and remove sensor (2).

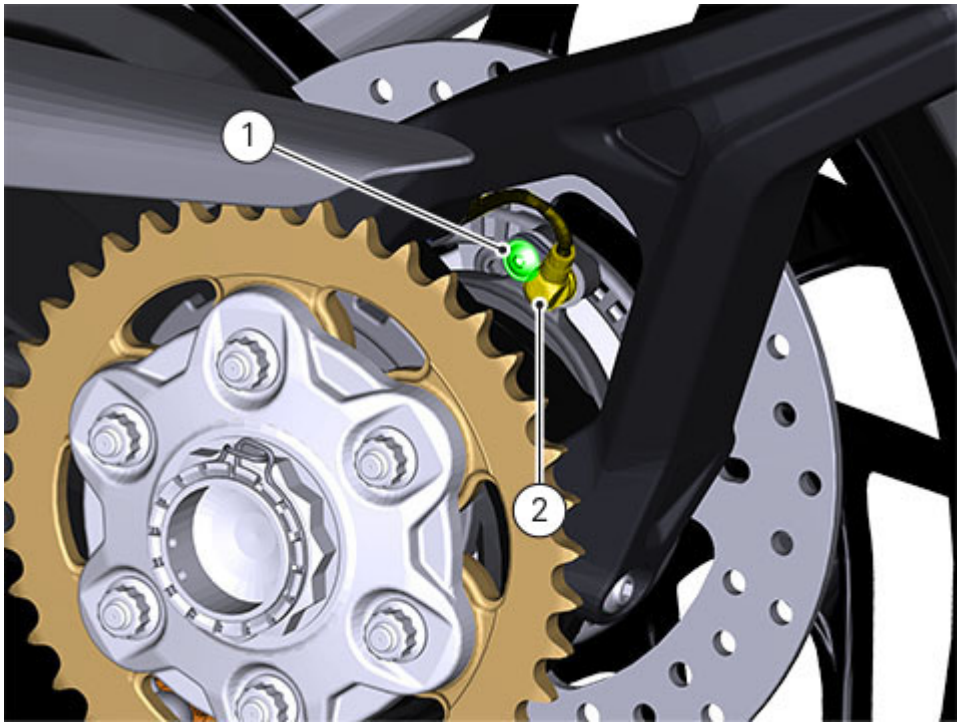

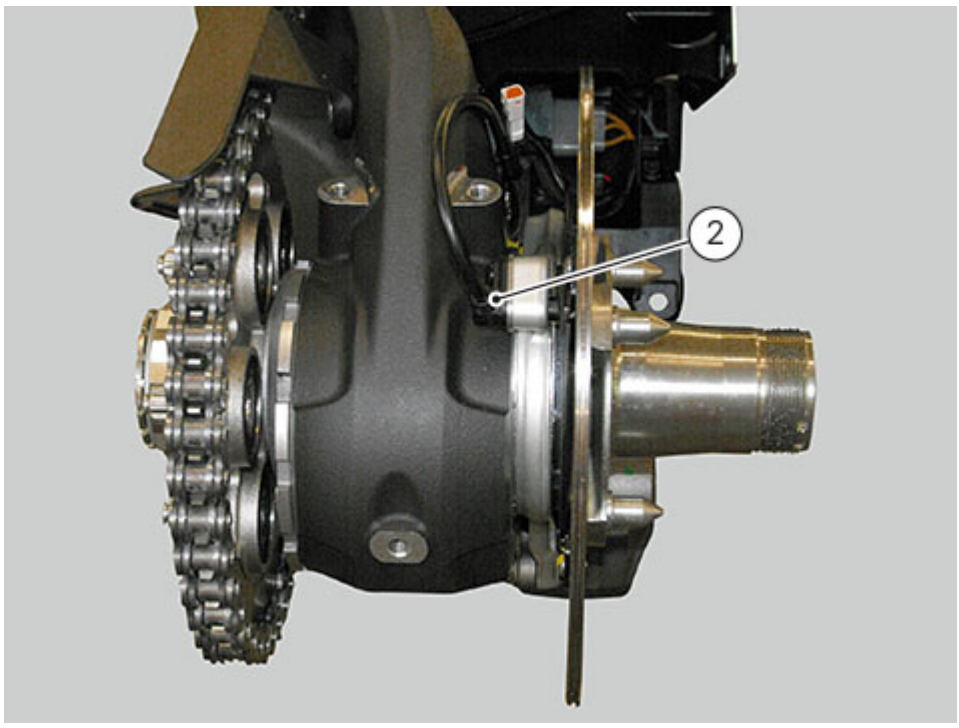

Loosen and remove the screws (3) of the cable ring.

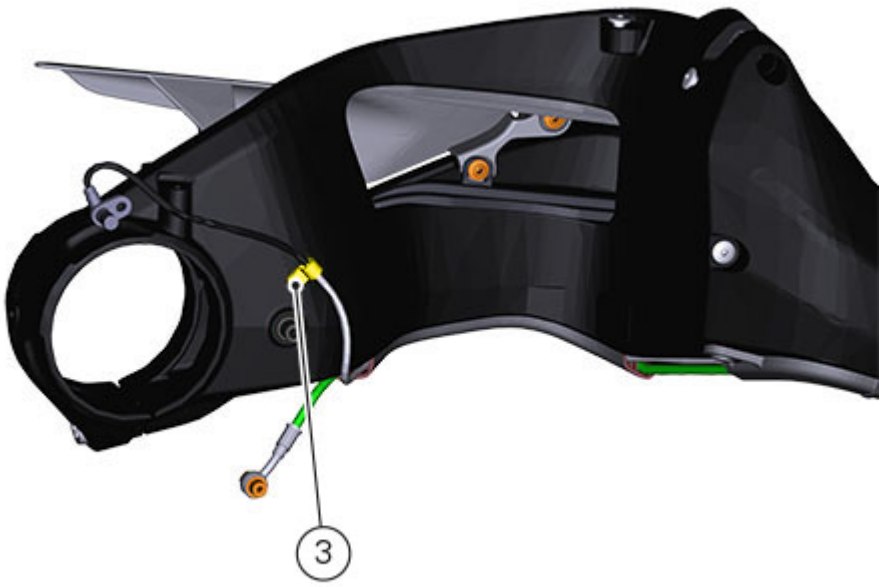

Remove chain sliding shoe (4) after undoing screws (5).
Release rear speed sensor cable (6) and remove cable ring (7) by loosening screws (8).

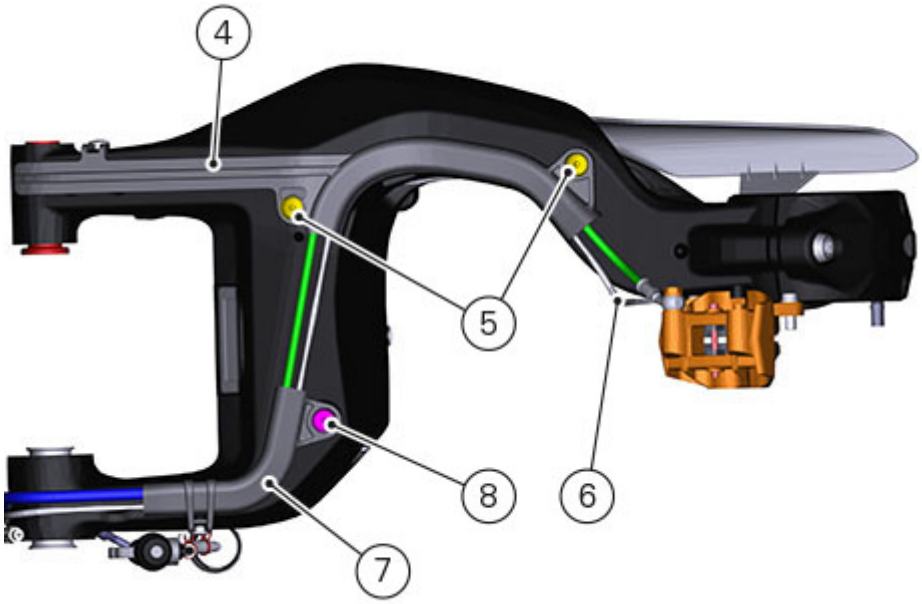

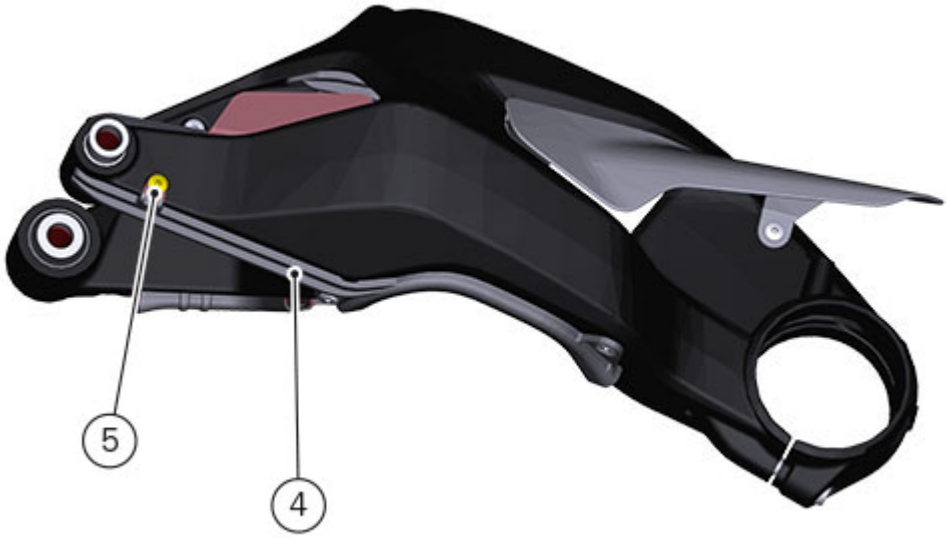

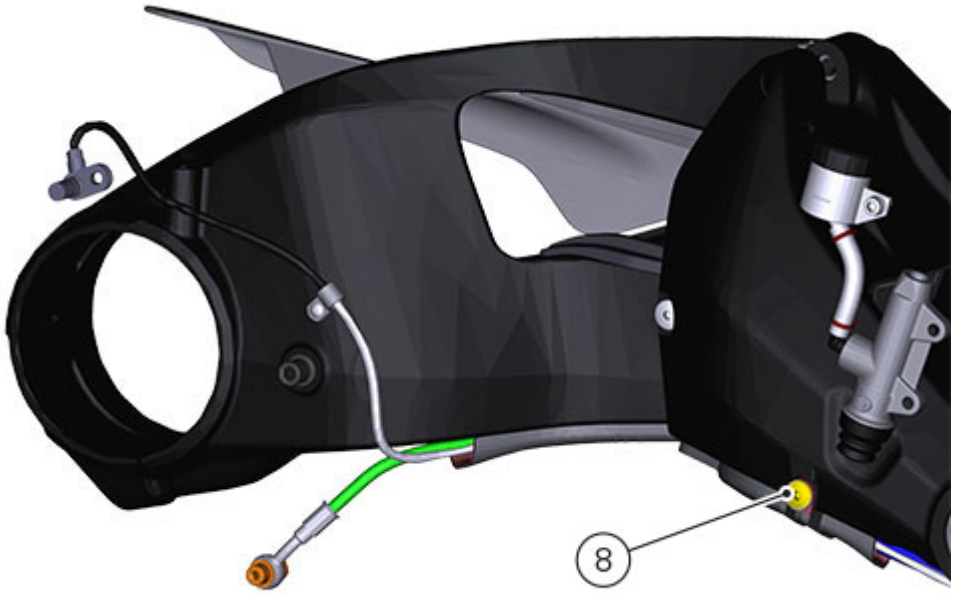

It is possible to check the supporting bearing play while the swinging arm (7) is still fitted on the motorcycle frame.
Try to move the rear of the swinging arm (7) in the four directions.
Any abnormal movement is a sign of worn bearings that could cause bike instability. Should this be the case, replace bearings (Removing the rear wheel eccentric hub and the rear wheel shaft).

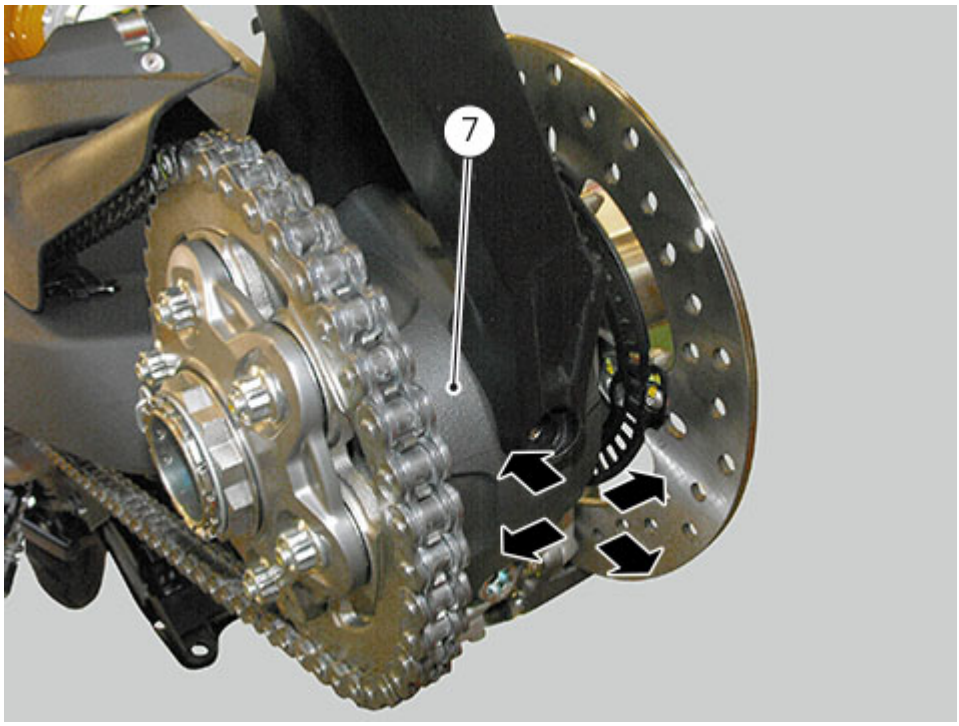

Once the play in the support bearings has been checked, the rear swinging arm (7) may be removed from the motorcycle.

Using a drift, fully extract the swinging arm shaft (18).
Remove the swinging arm assembly from the frame.

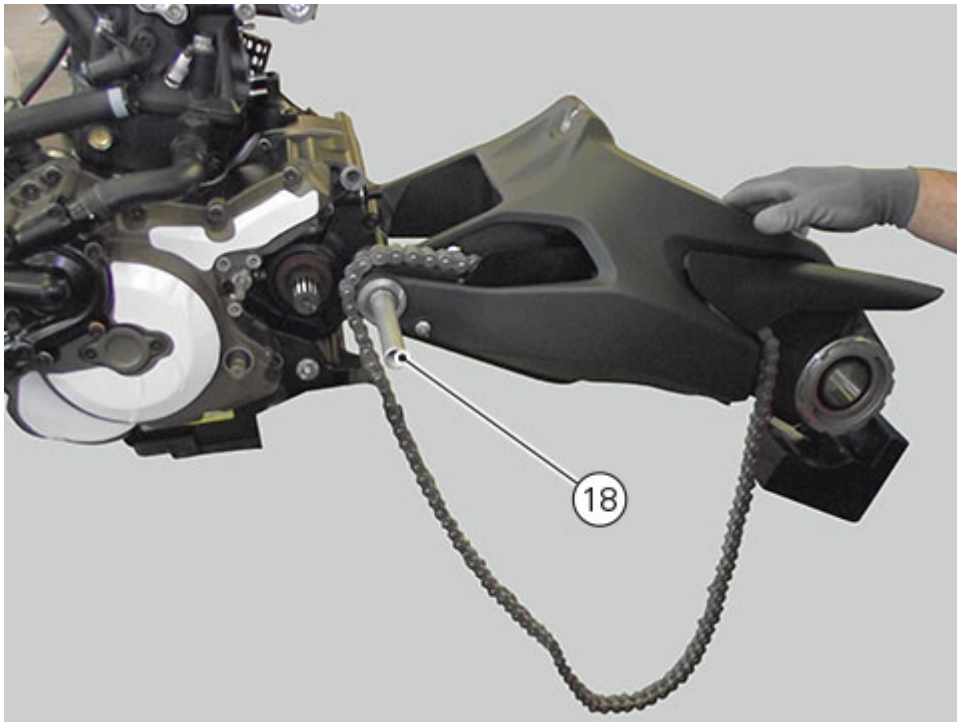

If necessary, remove the two spacers (19) and (17) from swinging arm right arm.

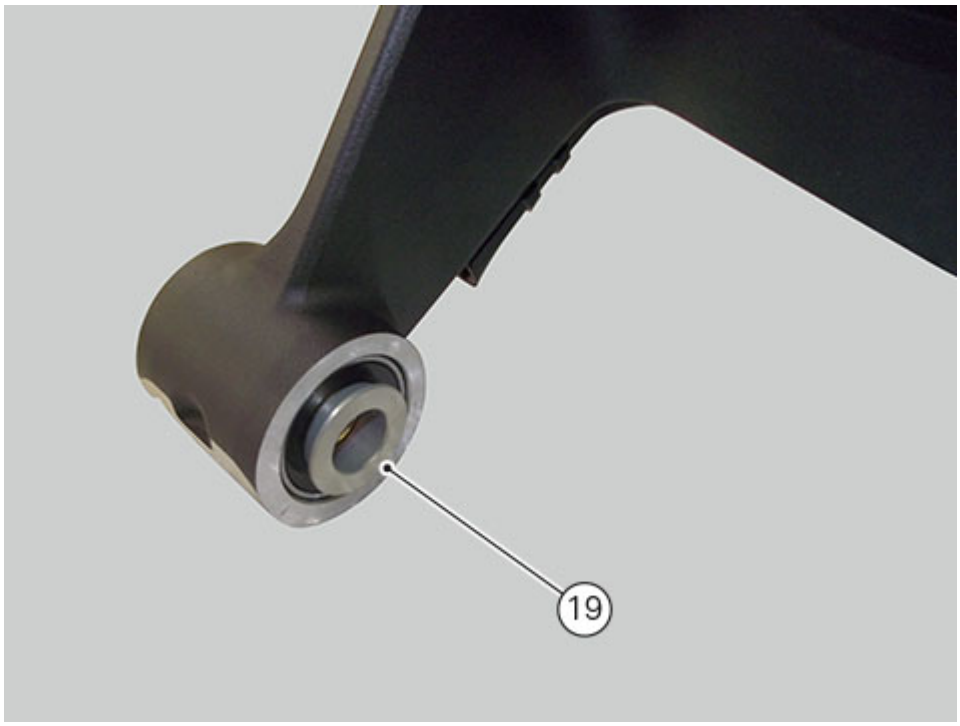



If necessary, use the special puller to remove bearings (22) and spacer (23).



Working on swinging arm left arm, if necessary, slide out bush (19) and the two seals (21).
Using the suitable puller, remove roller bearing cages (20).

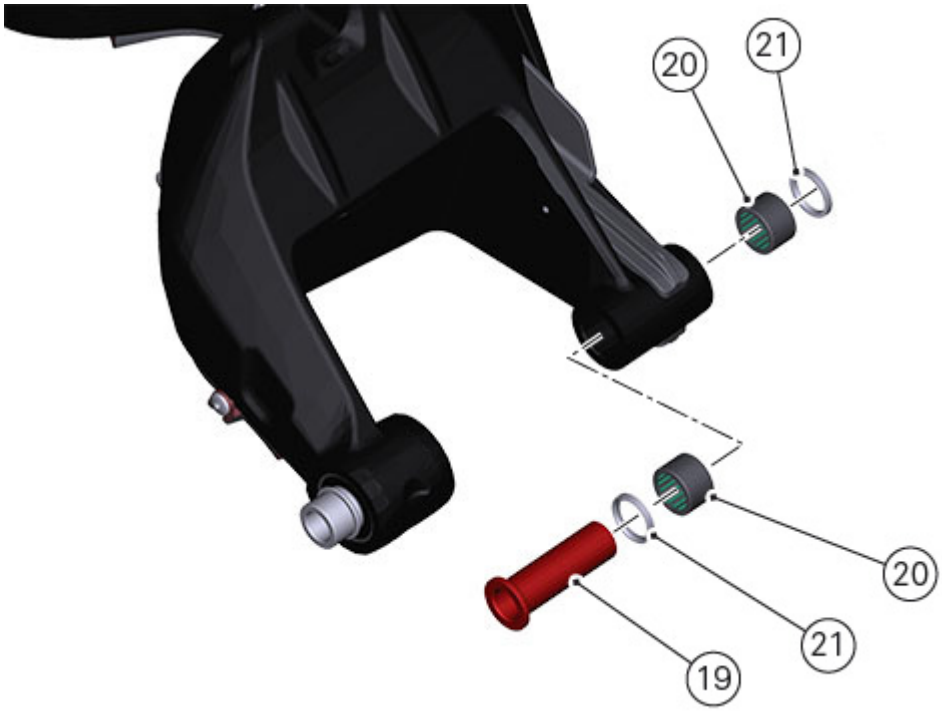

Refitting the rear wheel eccentric hub and rear wheel shaft

Refitting is the reverse of removal (Removing the rear wheel eccentric hub and the rear wheel shaft), with attention to the following points.
If the calliper bracket locating pin (10) was removed, apply the recommended threadlocker upon reassembly.
Tighten shaft (10) to a torque of 33Nm ± 5%.

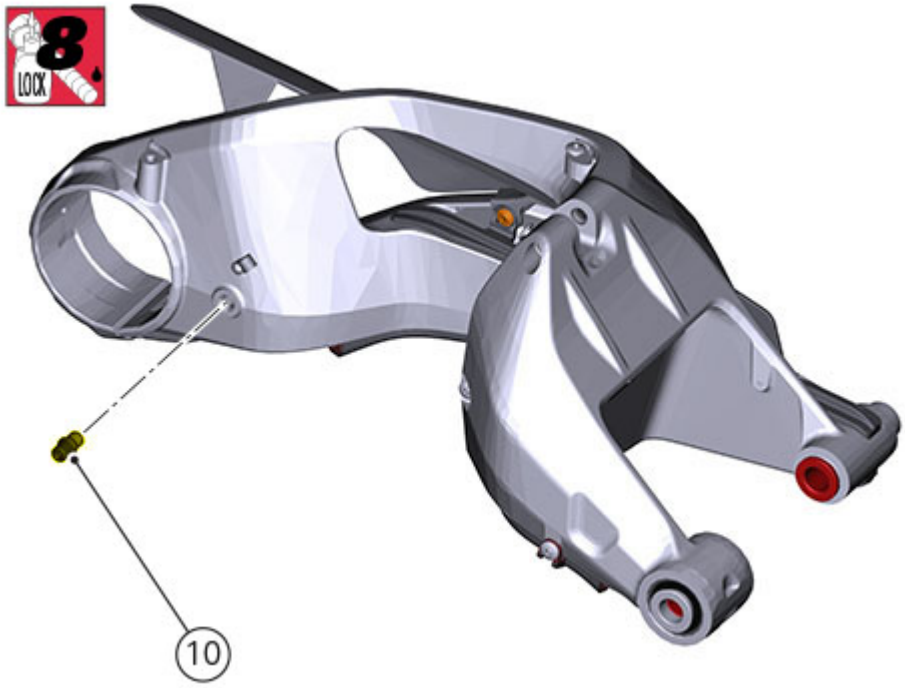

Before refitting, apply the specified product to the outer surface of eccentric hub (9).

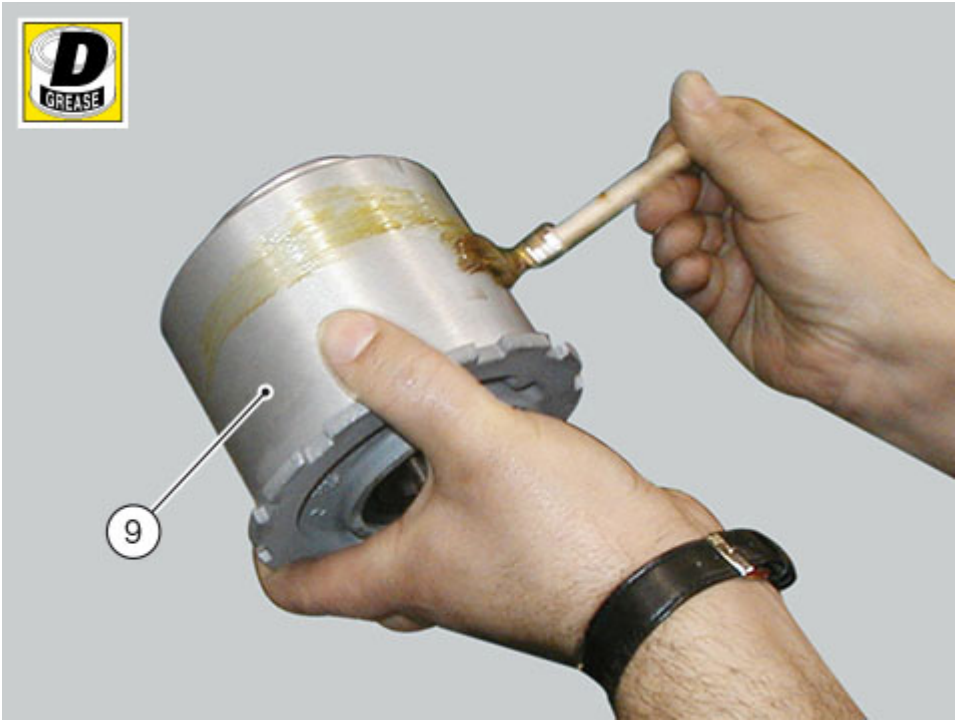

Fit the first washer (6).
Apply the specified product on seals (8) and position them in the seat of plate (7).
Fit plate (7) to swinging arm: pin (10) must be engaged in the plate (7).

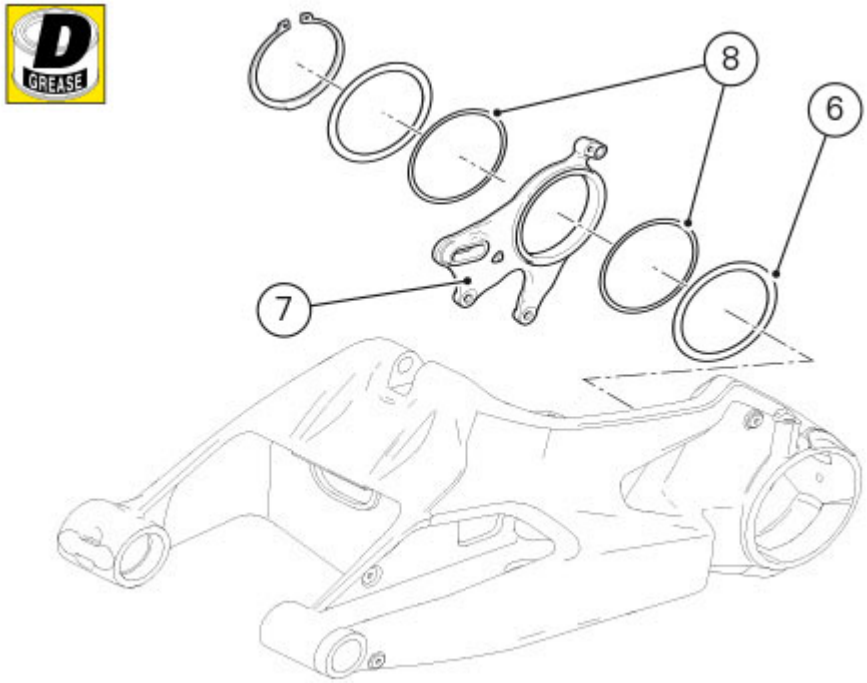

Refit the other washer (6).
Fit the circlip (5) with the sharp edge facing out.

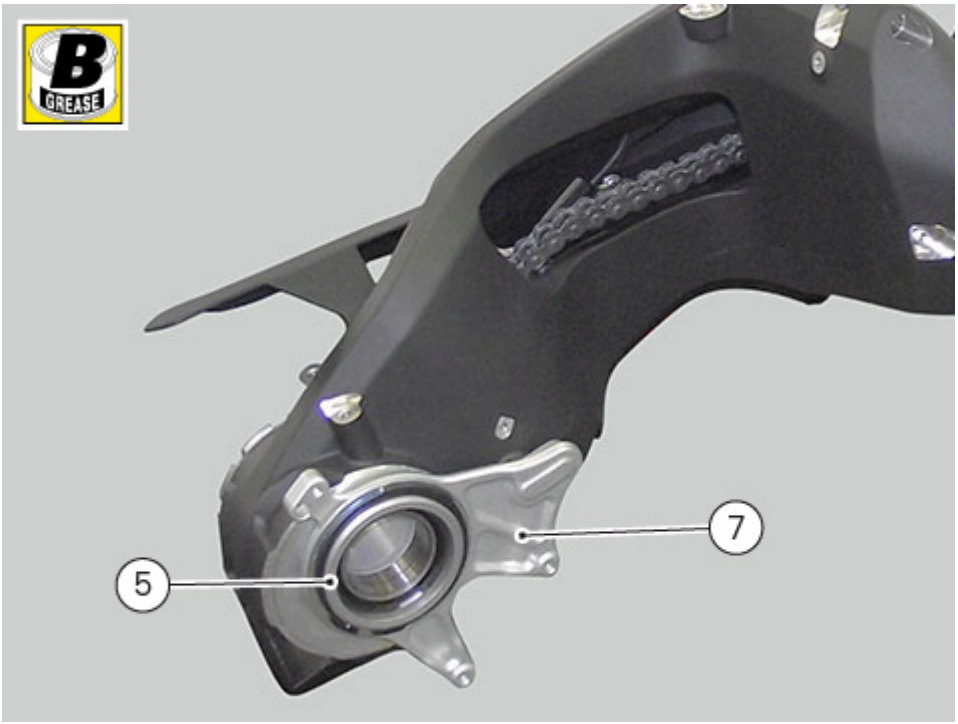

Make sure that the eccentric hub (9) position to swinging arm (11) is with the horizontal axis (D) of the hub hole (B) below the horizontal axis (C) of the hub seat.

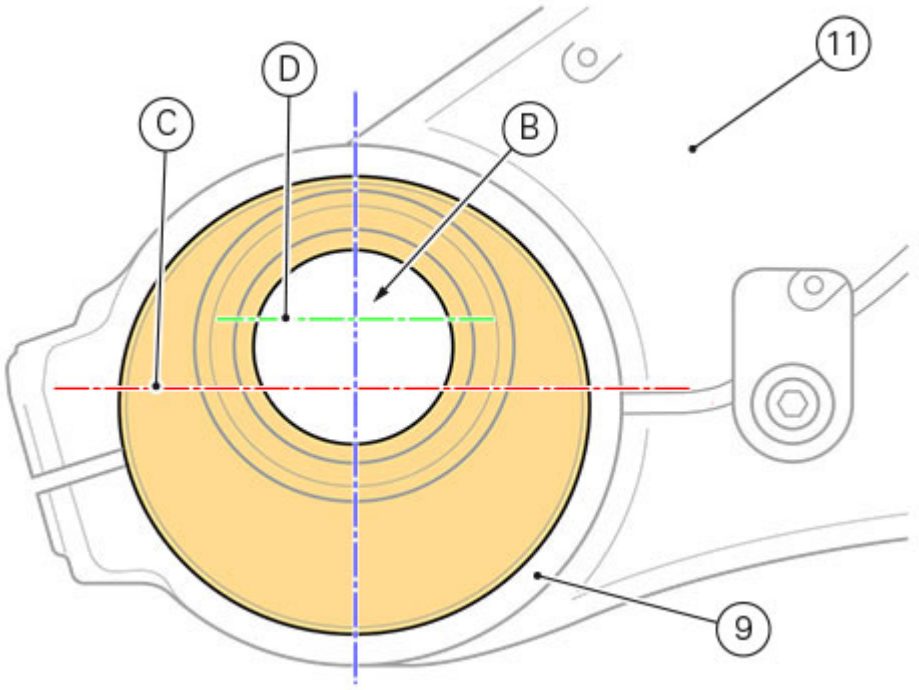

Apply an even coating of the specified product in the areas (A) of the shaft (3).

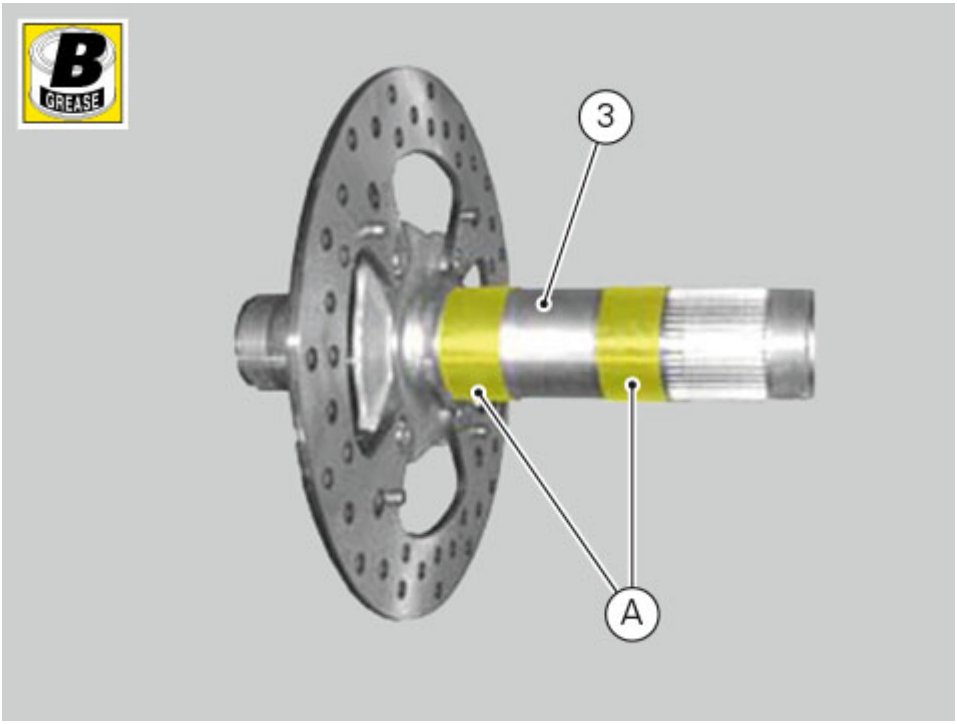

Insert the rear wheel shaft (3) in the hub.
Ensure the wheel shaft (3) is seated in the hub.
Fit bush (2) on wheel shaft (3).
Fit bush (2) on hub.
Apply the specified product on screws (A) and tighten them to a torque of 40Nm±5%.

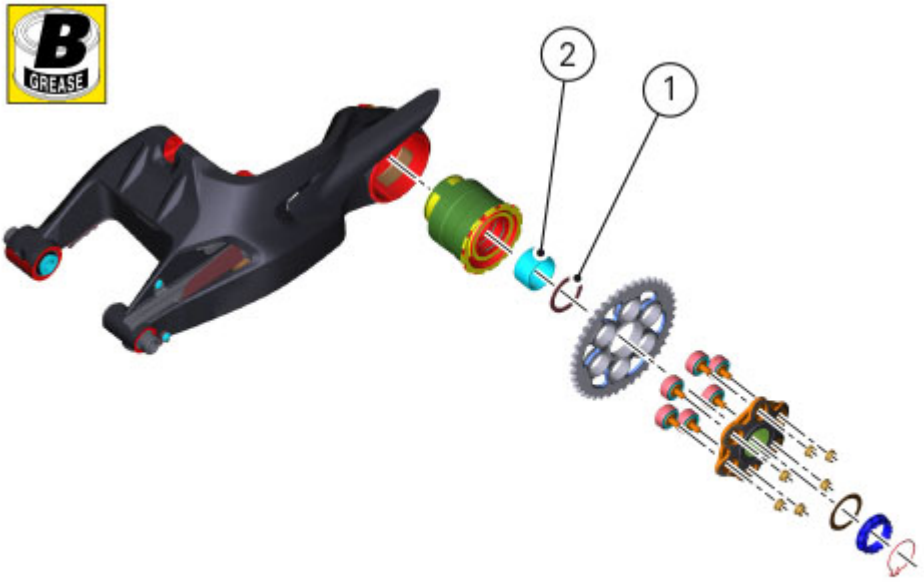
B
GREASE
2
1

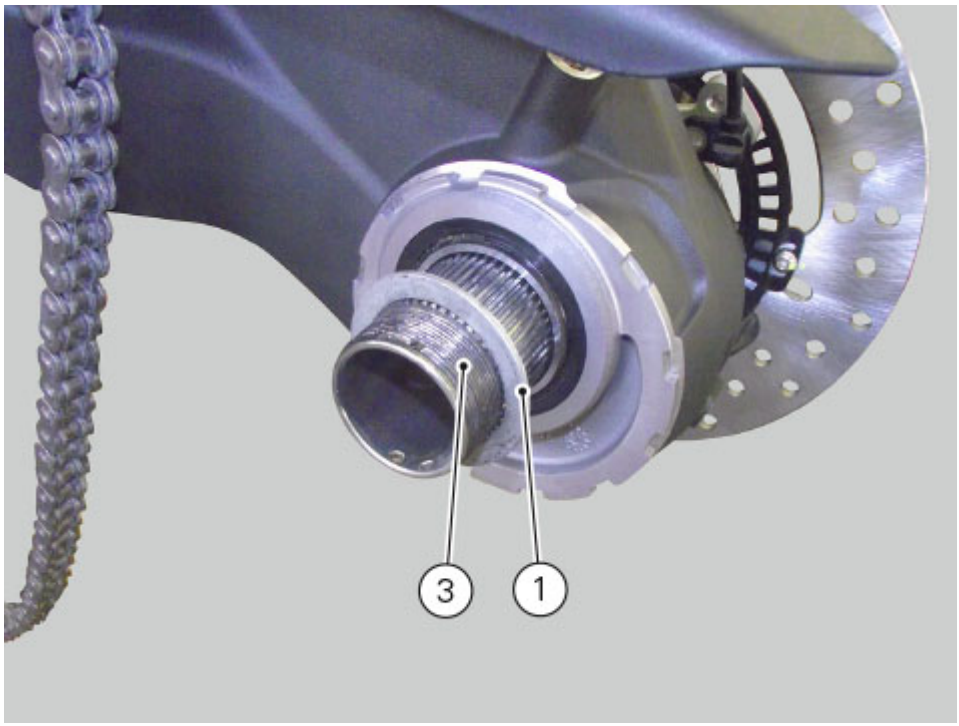
3
1

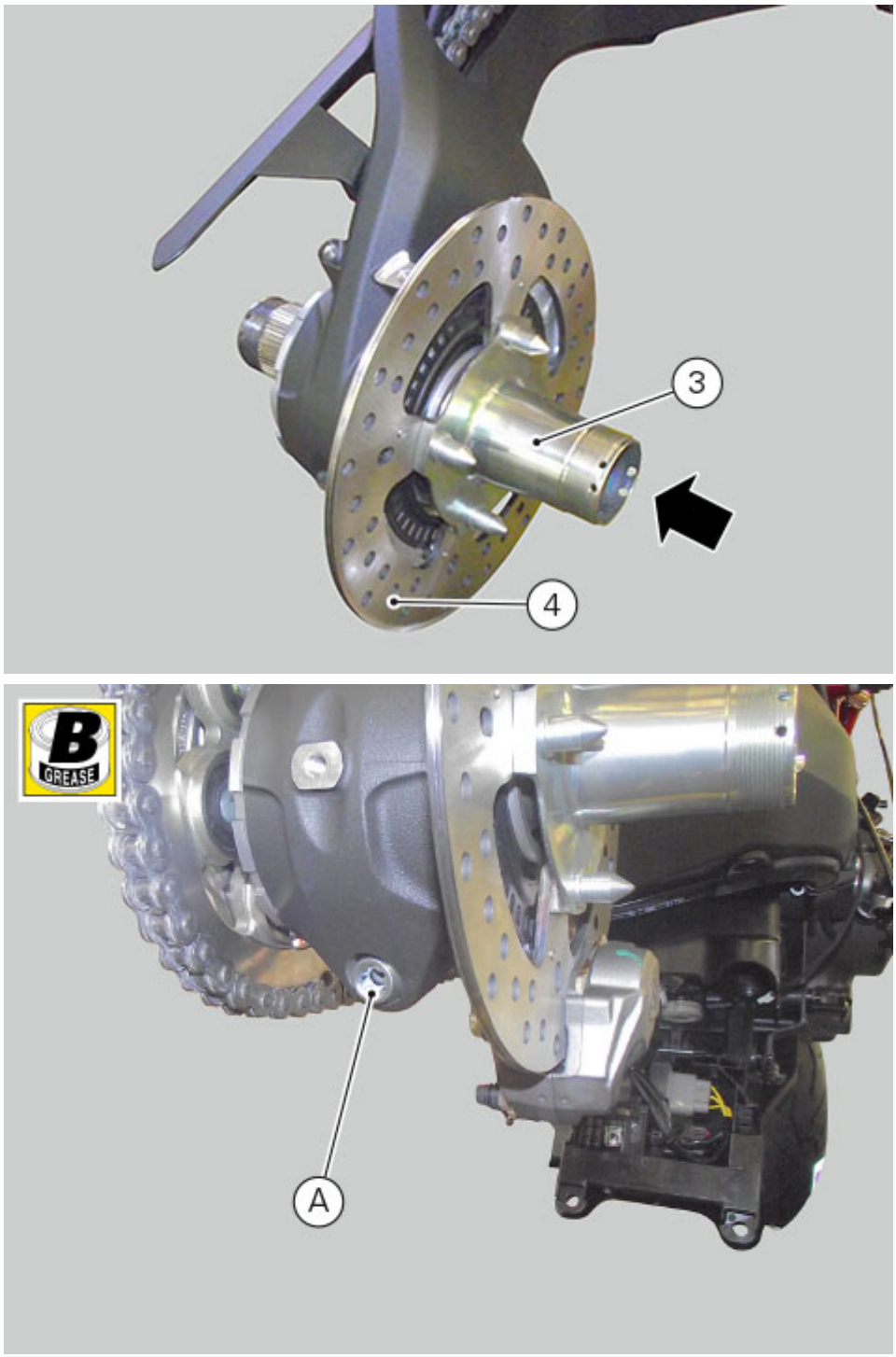

Refit the rear brake calliper (Refitting the rear brake calliper).
Refit the rear sprocket (Refitting the rear sprocket).
Refit the rear wheel (Refitting the rear wheel).
Refit the rear mudguard (Refitting the rear mudguard).
Refit the exhaust silencer (Refitting the silencer).
Tension the chain as described in Section (Adjusting the chain tension).

Removing the rear wheel eccentric hub and the rear wheel shaft

Remove the exhaust silencer (Removing the silencer).
Remove the rear wheel (Removing the rear wheel).
Remove the rear mudguard (Removing the rear mudguard)
Remove the rear sprocket (Replacing the rear sprocket).
Remove the rear brake calliper (Removing the rear brake calliper).

Loosen screw (A).
Remove the spacer (1) and the inner ring (2) on the chain side, and remove the wheel shaft (3) with the brake disc (4) from the opposite side.

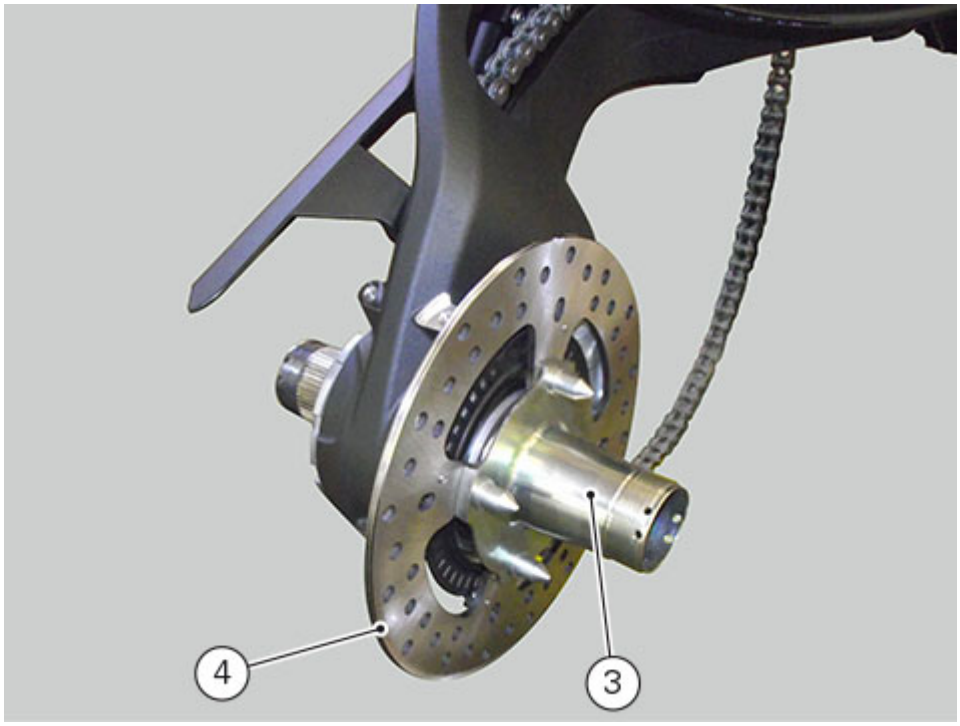

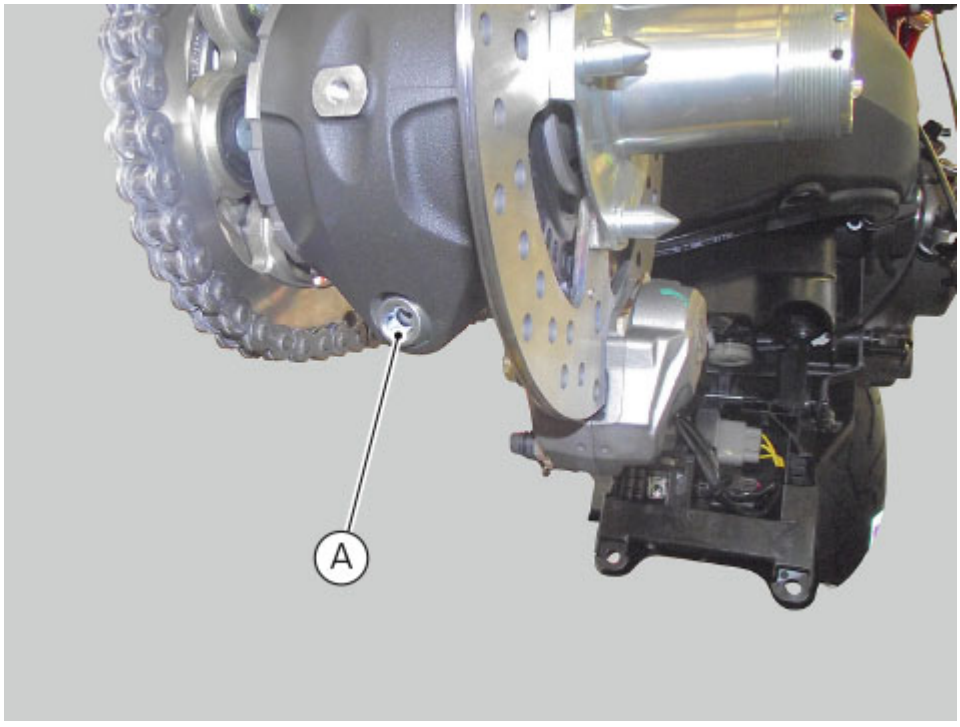

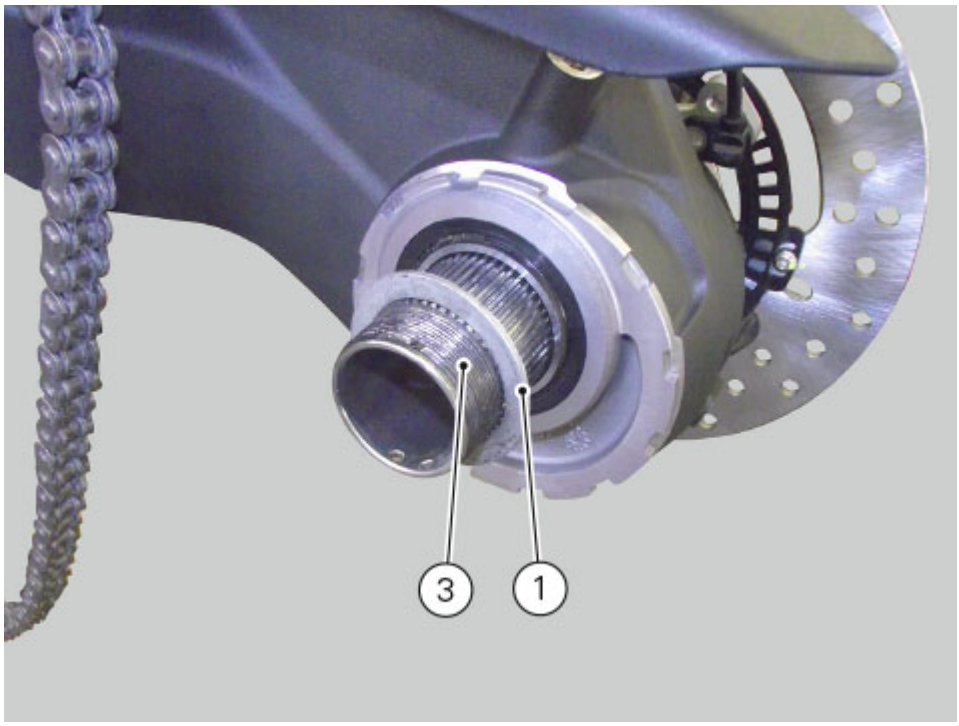



Remove snap ring (5) on eccentric hub wheel side, calliper holder plate (7) with O-rings (8).



Attention

The rear hub is very important for vehicle dynamic safety; it is available as a single spare part since you must not service its internal parts; part no. 756.1.008.1A.

Lubricating the chain

O-ring chains have sealed, life-lubed link studs and bushes.
However, these chains need to be lubricated at regular intervals to protect metal parts of the chain and the O-rings.
Lubrication also serves to keep the O-rings soft and pliable to ensure the maximum sealing efficiency.
Using a brush, apply a thin protective layer of high-density gearbox oil along the entire length of the chain both inside and outside.

Washing the chain

Chains with O-rings must be washed in oil, diesel fuel or paraffin.
Do not use fuel, trichloroethylene or other solvents which will damage the rubber O-rings.
For the same reason use only sprays specifically formulated for use with O-ring chains.

Refitting the rear sprocket

Check the cush drive dampers (6) condition and, if necessary, replace them by removing them from the flange.
Refitting is the reverse of removal "Replacing the rear sprocket".
Apply the specified product to the outer diameter of rear sprocket holder flange (4).
Fit rear sprocket flange (4) onto rear sprocket (5), engaging cush drive damper pins (6).
Apply the specified product to the threads of nuts (8).
Start nuts on cush drive damper pins threaded end (6).
Tighten the nuts (8) to a torque of 48Nm±10%, following a cross pattern.

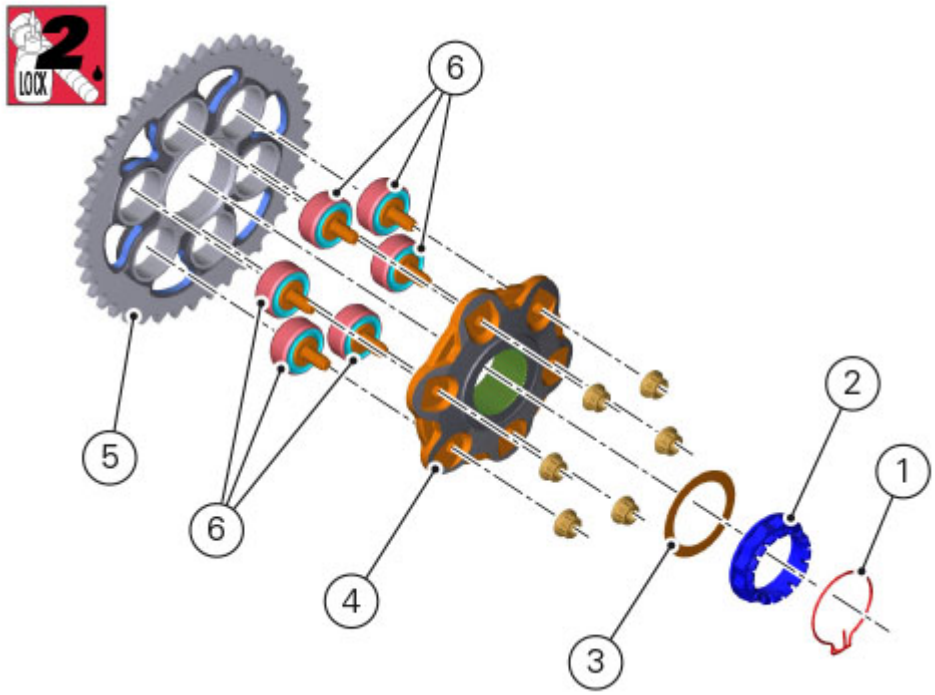

Check for wear as described under section "Inspection of the final drive".
To refit the nut (2), follow the specifications for the wheel locking nut, in section "Refitting the rear wheel".

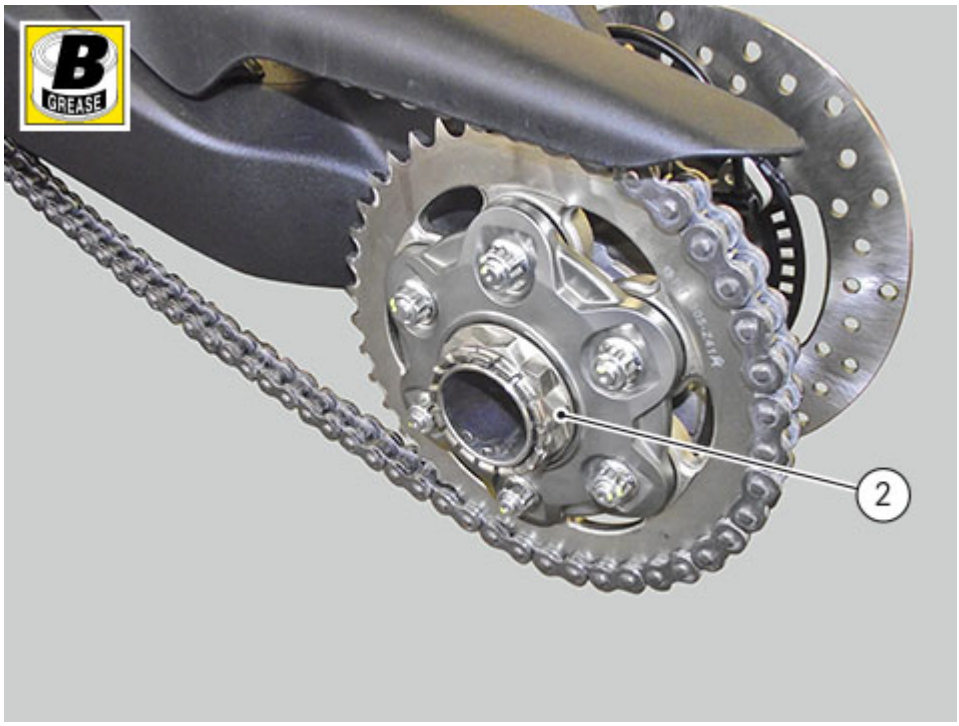

Replacing the rear sprocket

Slacken the chain (Adjusting the chain tension).
Remove the exhaust silencers (Removing the silencer).
Remove the rear wheel (Removing the rear wheel).

Restrain wheel shaft against rotation.
Remove the circlip (1).
Using a suitable socket wrench, loosen nut (2).
Fully unscrew the nut (2) and remove the washer (3) and the flange (4) with the sprocket (5).
Using a mallet, tap the sprocket flange (4) with the cush drive damper (6) off the rear sprocket (5).

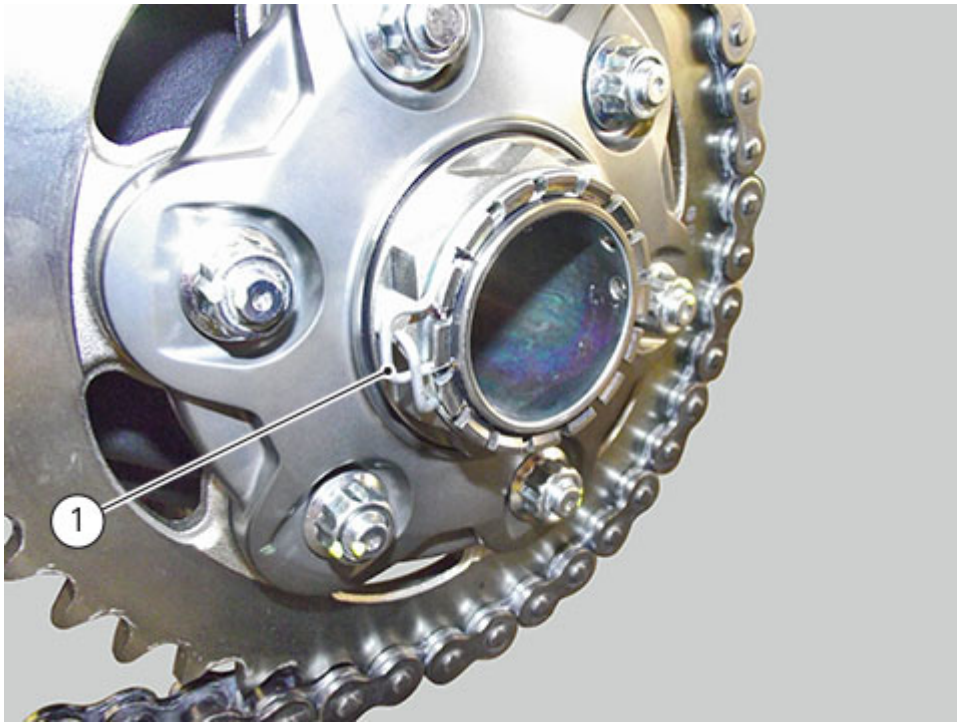

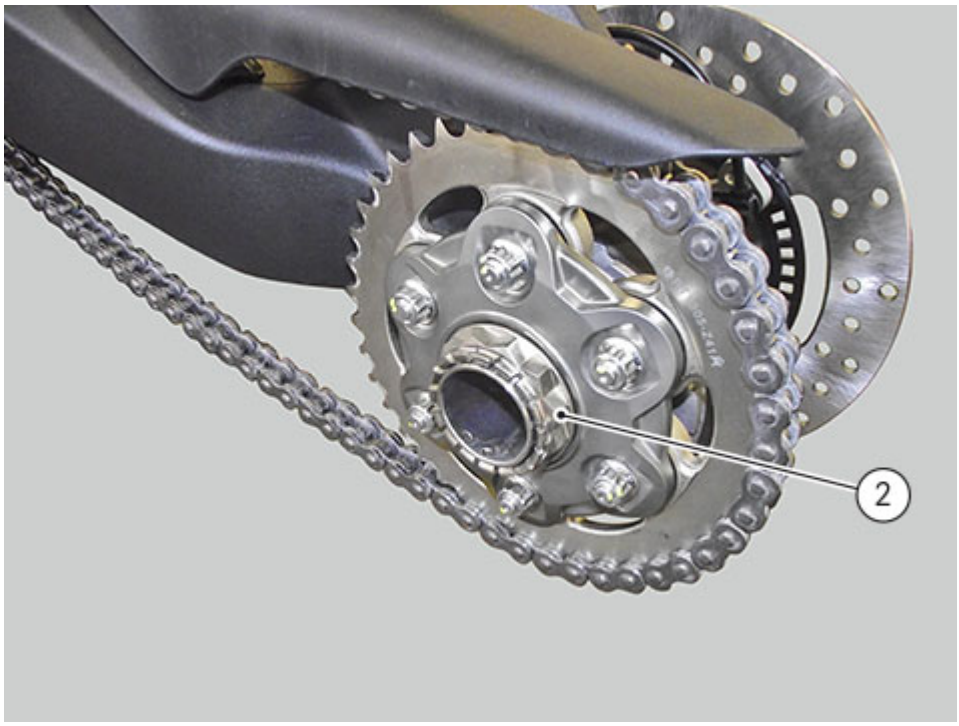

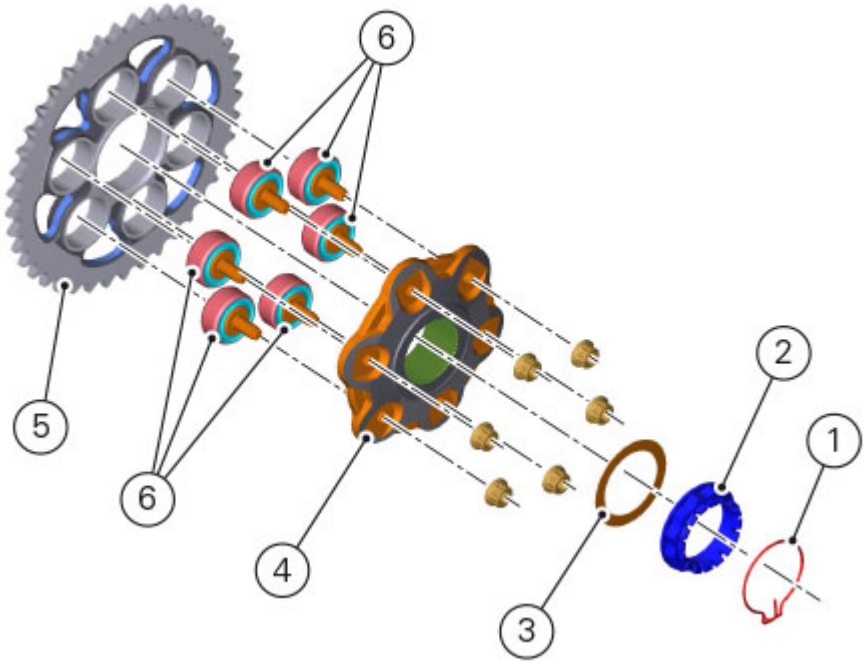
6
5
6
4
3
2
1

Refitting the front sprocket

Check that the spacer (6) is installed on the gearbox secondary shaft.
Refit the ring (8).
Grease the O-ring (7), and install it on the front sprocket spacer (6).
Fit the spacer, from the O-ring side, on the secondary shaft and drive it fully home against the inner ring of the bearing.

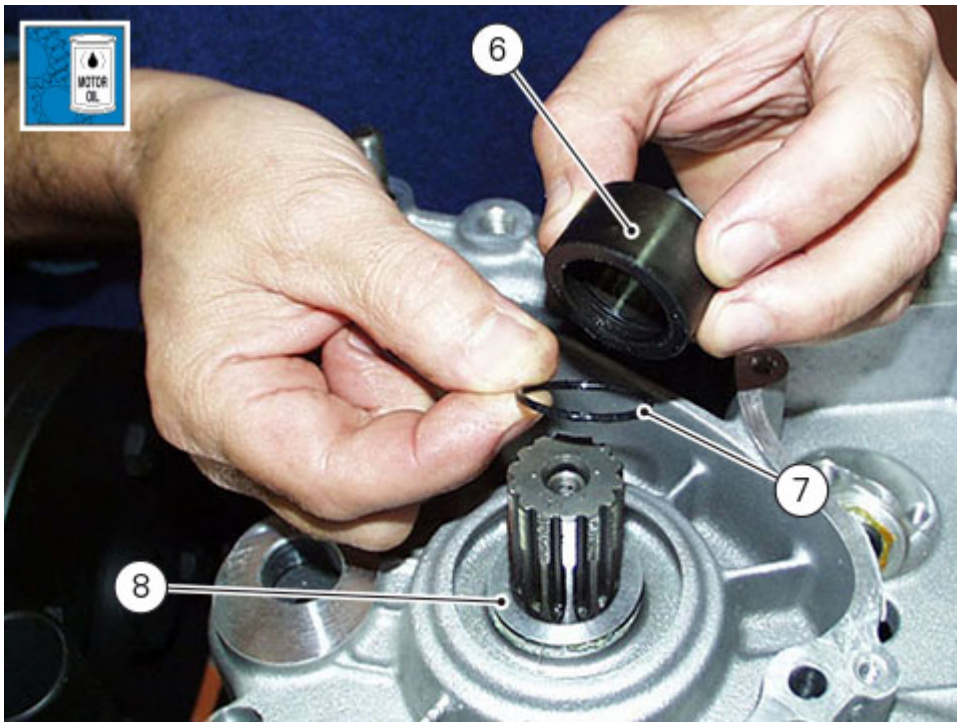

Check that the splines of the gearbox secondary shaft and the sprocket are in perfect condition.
Fit the front sprocket (5) on the gearbox secondary shaft, orienting it as shown.
Fit lockwasher (4).
After having applied the recommended threadlocker, tighten the nut (3) to a torque of 186Nm±5%.
Bend the washer (4) over the nut.

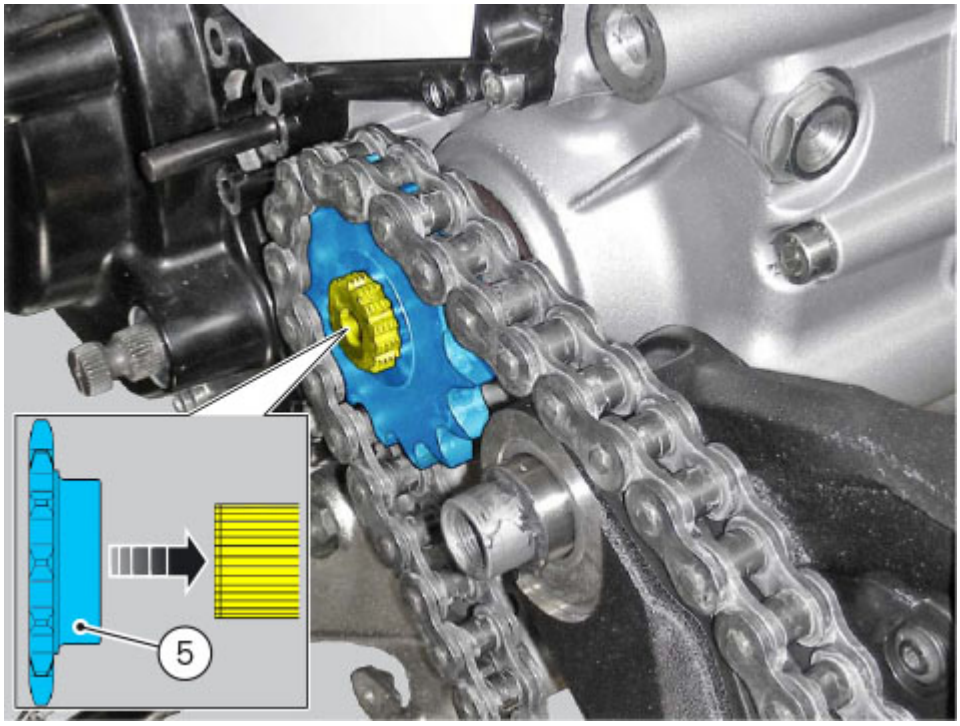

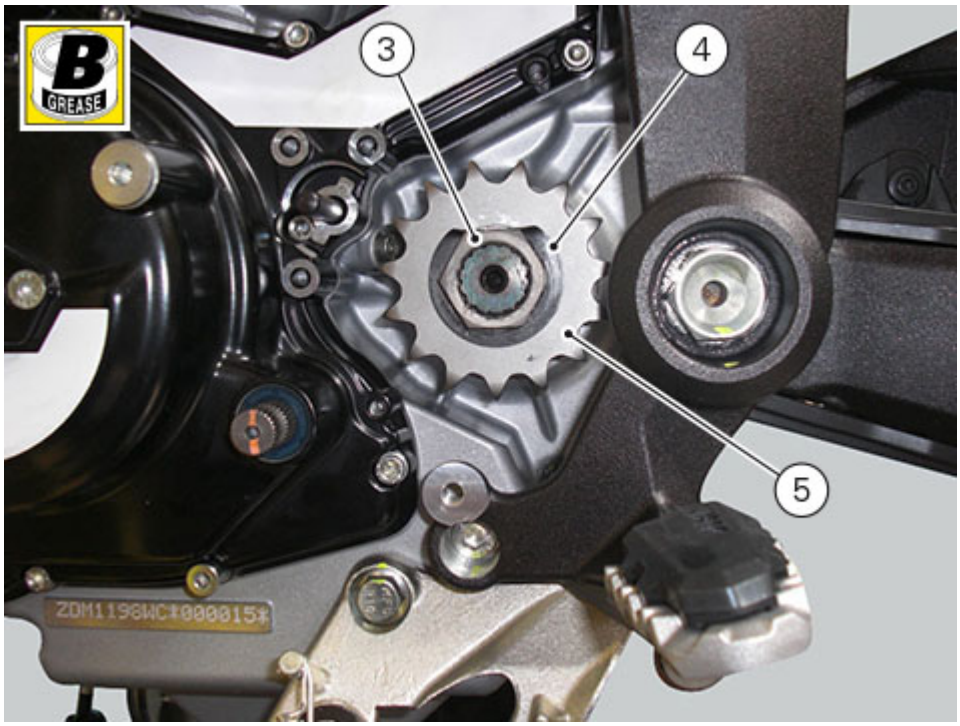

Fit the chain and close it using the tool (X) no. **88713.1344**, which was used to open the chain.
The tool consists of a holder (A), a punch (B), a body (C), two wrenches (D) and (E) and a plate holder (F).
Connect the two ends of the chain with the external link, and manually fit the plate onto the pins.

Warning
Lubricate the pins abundantly; try to avoid touching them with your hands.

Fit the holder (A) onto the external link.
Fit the punch (B) into the body (C) and the plate holder (F).
Fit the body (C) onto the holder (A) which holds the chain in position.
Manually turn the bolt (G) until the plate holder (F) is seated against the plate itself.
Use wrenches (D) and (E) to turn the bolt (G) clockwise until the chain pin is in contact with the holder (F).
Remove the holder (A) from the tool.
Manually turn the bolt (G) until the punch (B) is brought into contact with the pin to be riveted, taking care that they are aligned.
Use wrenches (D) and (E) to turn the bolt clockwise until the punch (B) is seated against the chain plate.
To complete riveting, repeat the entire procedure with the second pin.

Warning
Carefully check the two pins: the figure shows the correct result of the procedure.

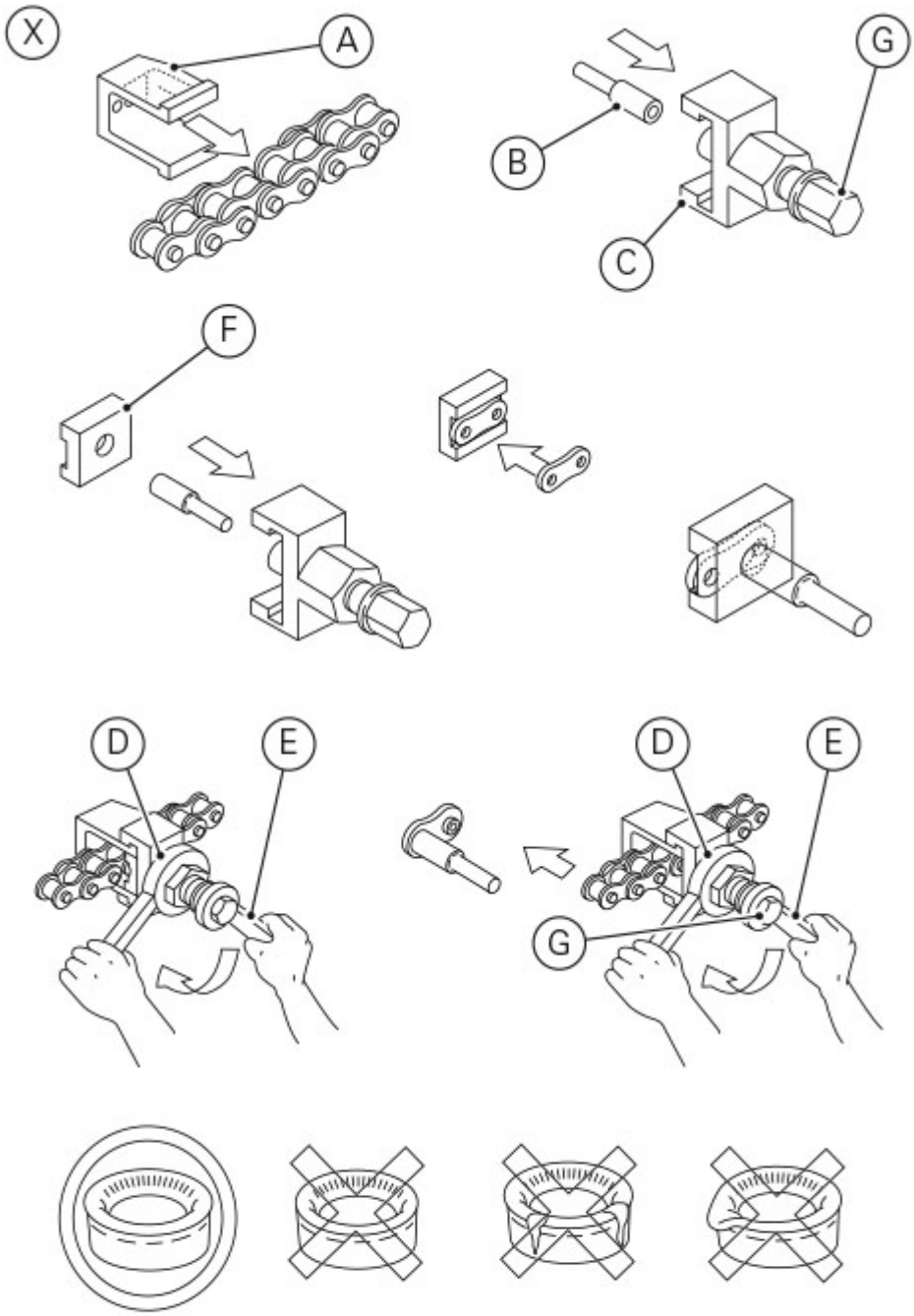

Tension the chain (Adjustment of chain tension).
Apply the recommended threadlocker to the screws (2).
Fit the sprocket cover (1) and tighten the screws (2) to a torque of 6Nm±10% after having applied the specified threadlocker.

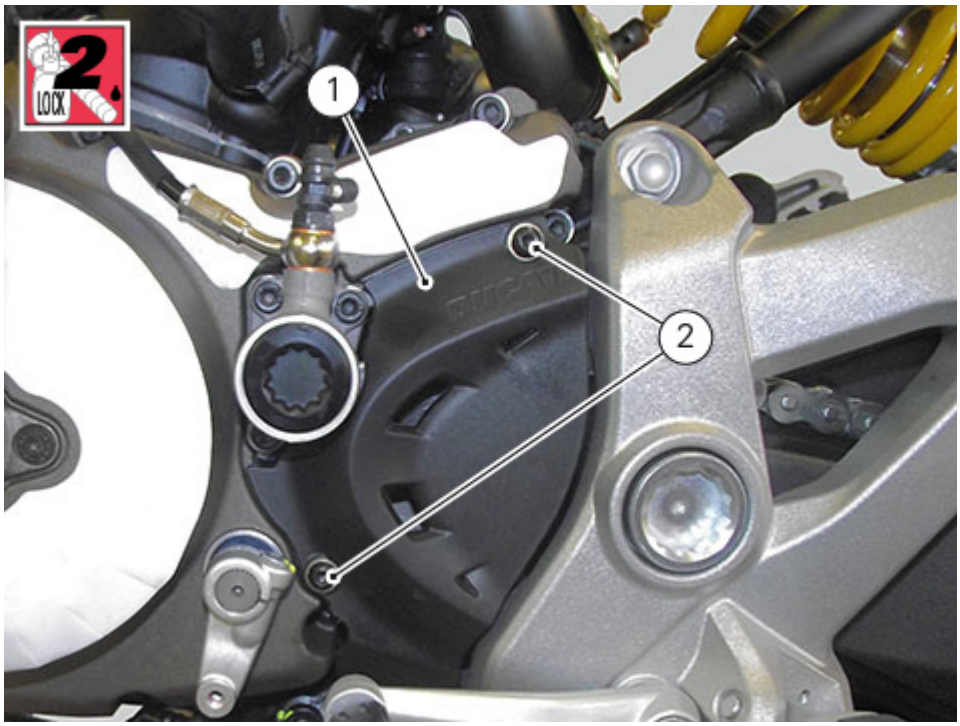
2.
LOCK
1
2

Removing the front sprocket

Undo the screws (2), and remove the chain cover (1).
Slacken the chain (Adjusting the chain tension).

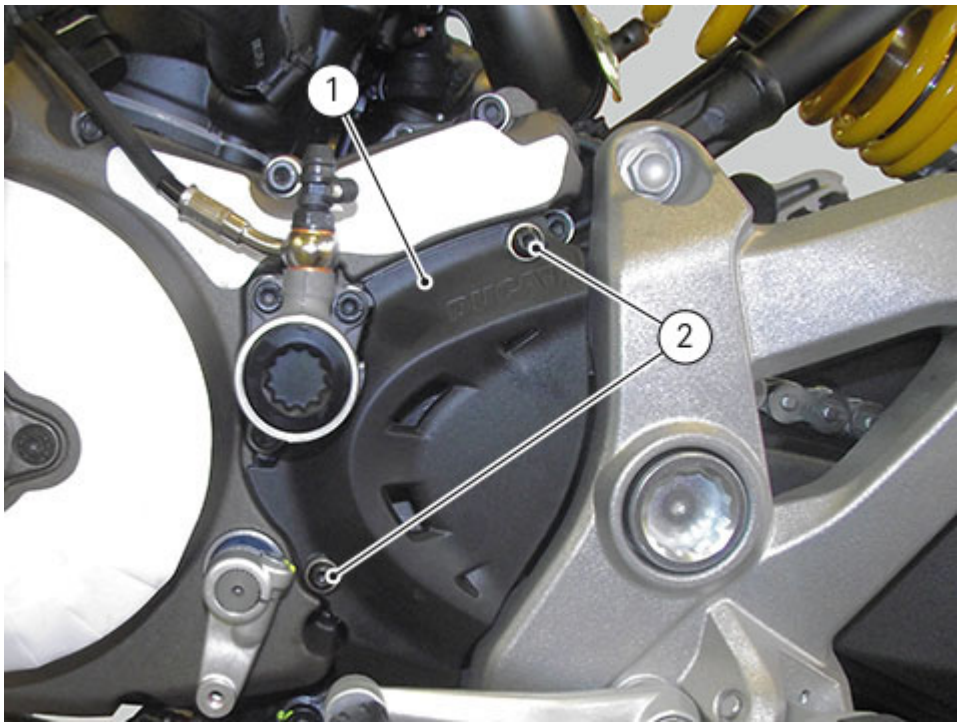

Remove the chain using tool (X) part no. **88713.1344**.
The tool consists of a holder (A), a punch (B), a body (C) and two wrenches (D) and (E).
Fit the link to be opened into the holder (A).
Fit the punch (B) into the body (C) and manually undo the screw until the punch no longer protrudes.
Fit the holder (A) and the link into the body (C).
Manually turn the bolt (F) on body (C) so that the punch (B) gets against the pin, taking care that they are aligned.
Fit the hexagon wrench (D) into the hexagonal part of the body (C) and the wrench (E) onto the bolt.
Turn clockwise the bolt (F) until the pin comes out.

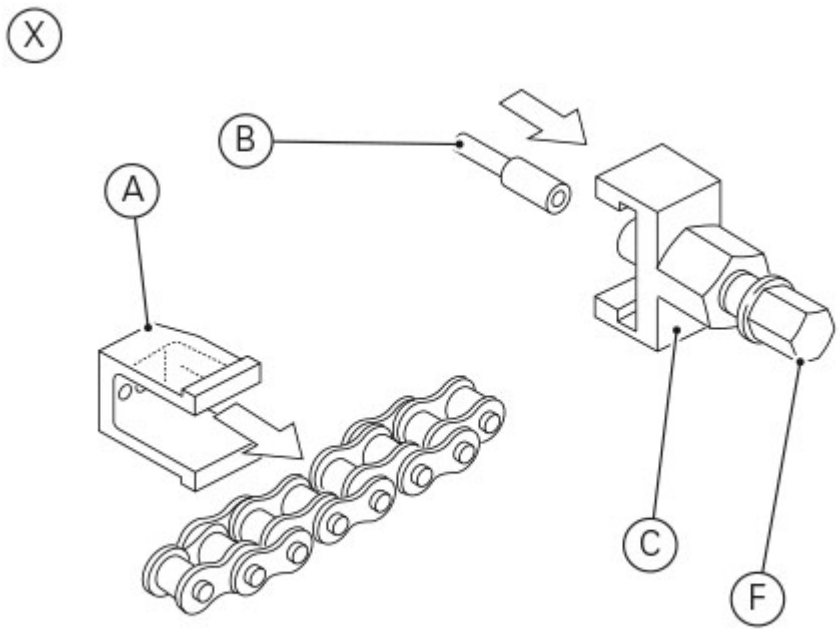

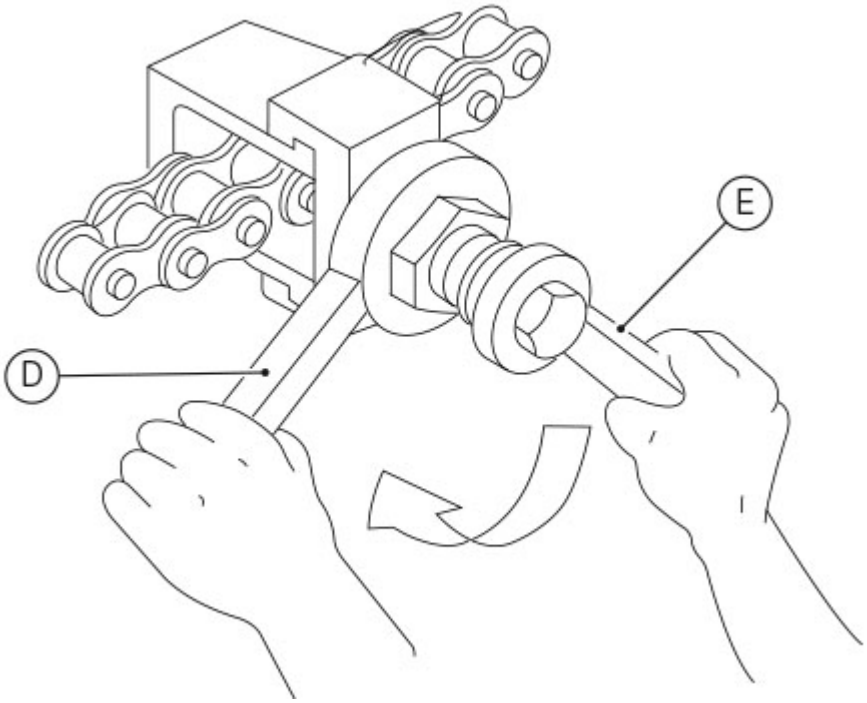

Remove the chain.
Engage the first gear and loosen nut (3).
Remove the nut (3) and the lockwasher (4) on the sprocket.
Remove the front sprocket (5) from the gearbox secondary shaft.

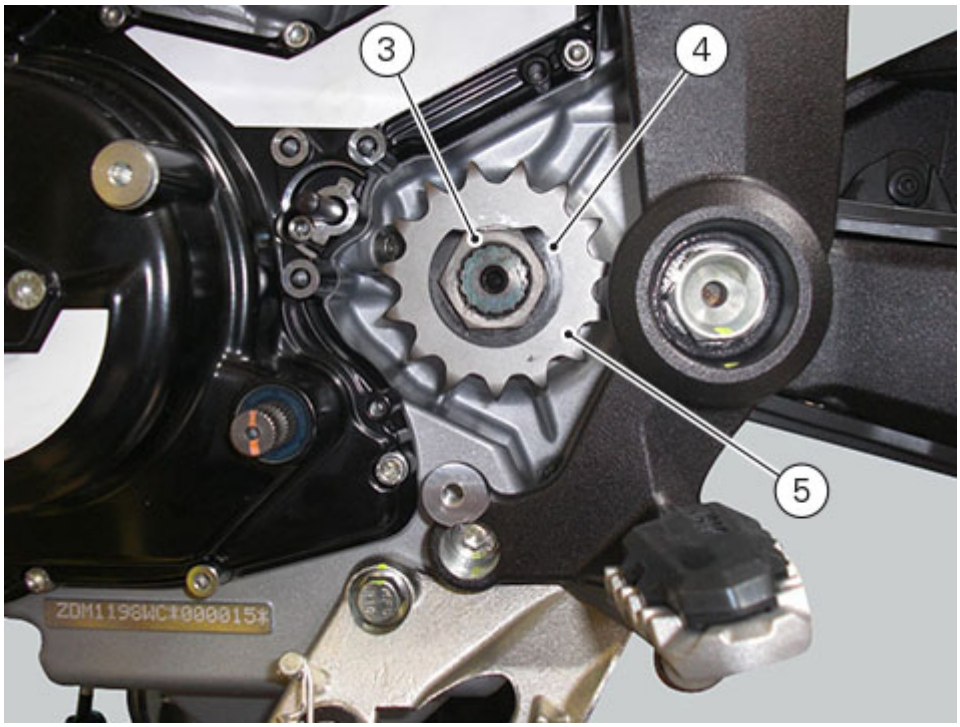

Remove the spacer (6) with O-ring (7) and washer (8) from the gearbox secondary shaft.

Important
The O-ring must be renewed upon removal.

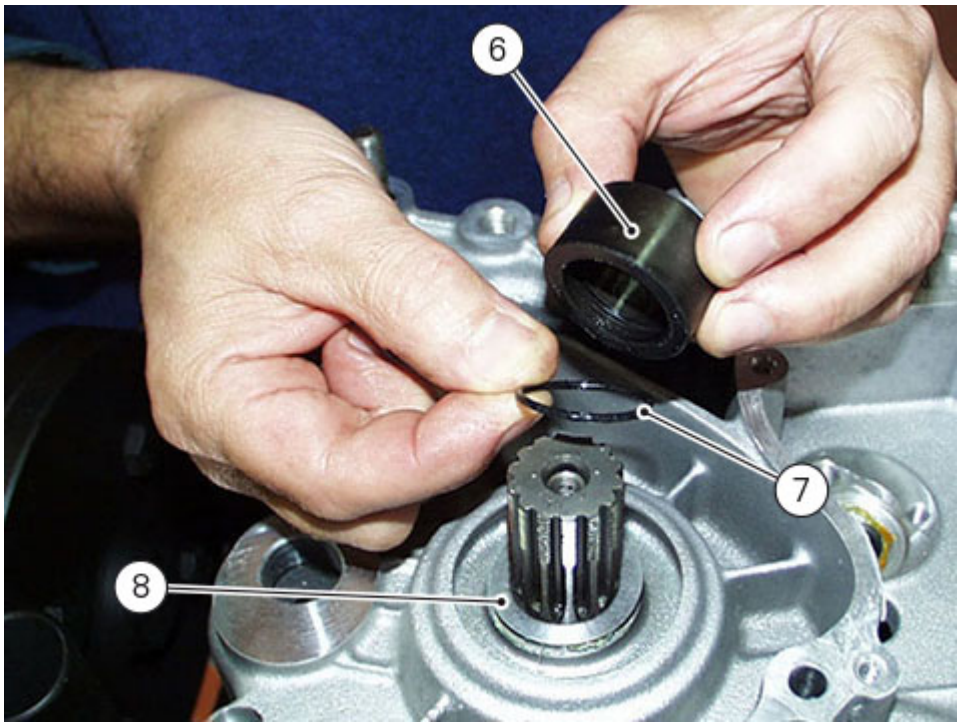
6
7
8

Inspection of the final drive

To check the final drive wear, visually check the front sprocket (1) and the rear sprocket (2).
If the teeth are worn as shown in the figure (dotted line), the final drive must be replaced.

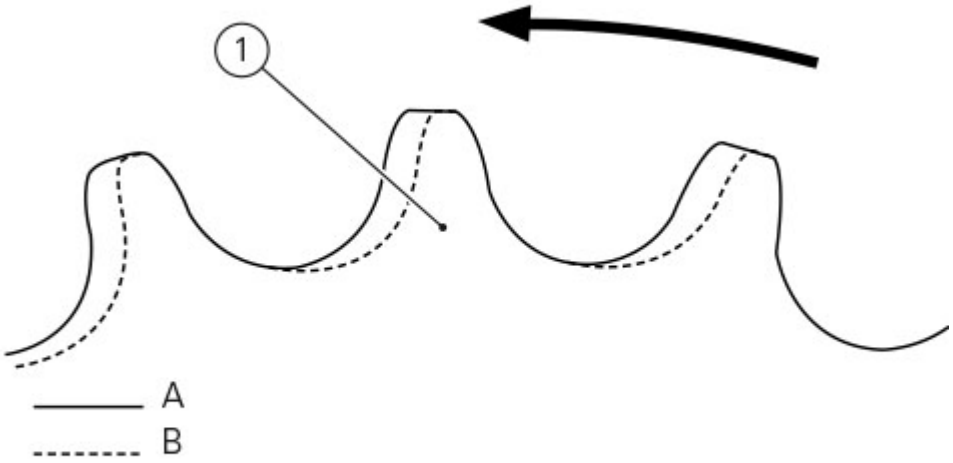

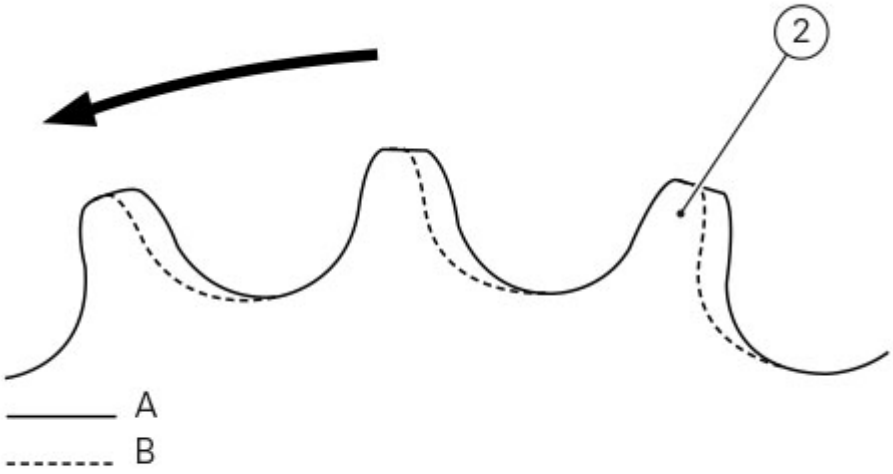

Warning
Make sure that the rear sprocket, front sprocket and chain are all replaced together as a set.

Refitting the footpeg holder plate

LH PLATE

Position the LH plate (4) and start special screw (9).

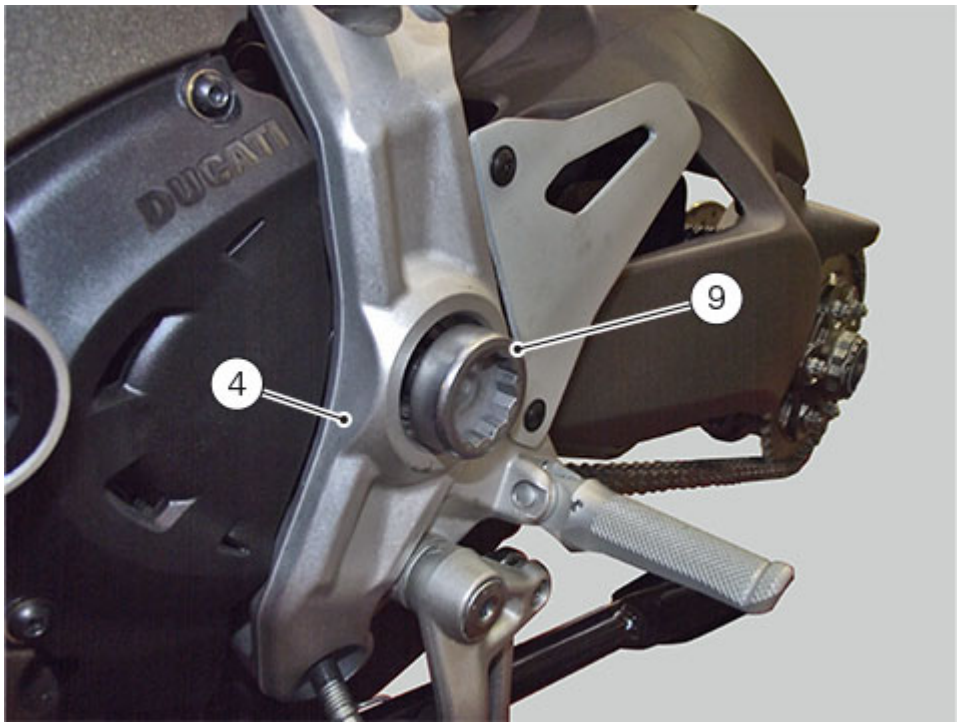

Working on the left side, position upper pin (8) securing LH plate (4) to engine, and start upper nut (6) on vehicle RH side, securing the two plates together.

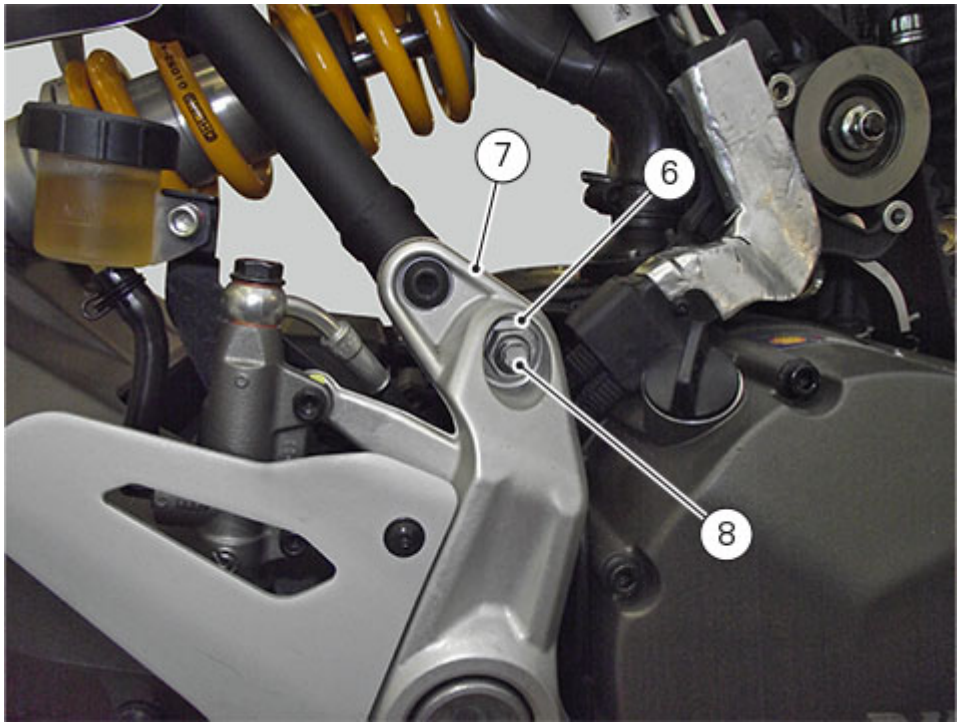

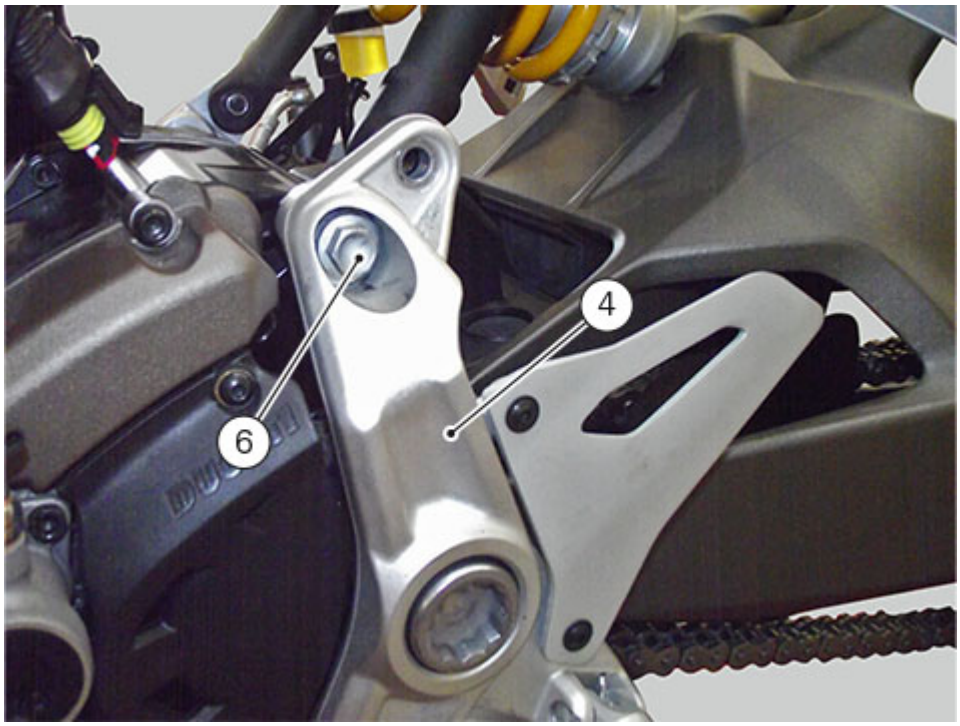

Start the lower retaining screw (5) of the LH plate (4).

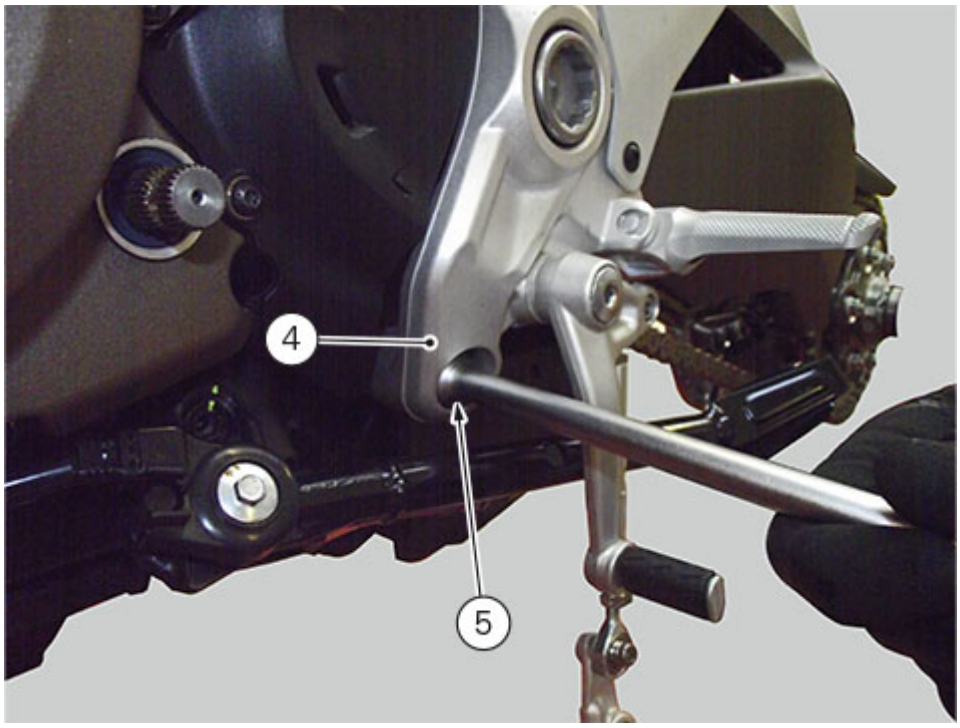

Start screw (3) securing LH plate (4) to rear subframe, with the relevant rear nut.

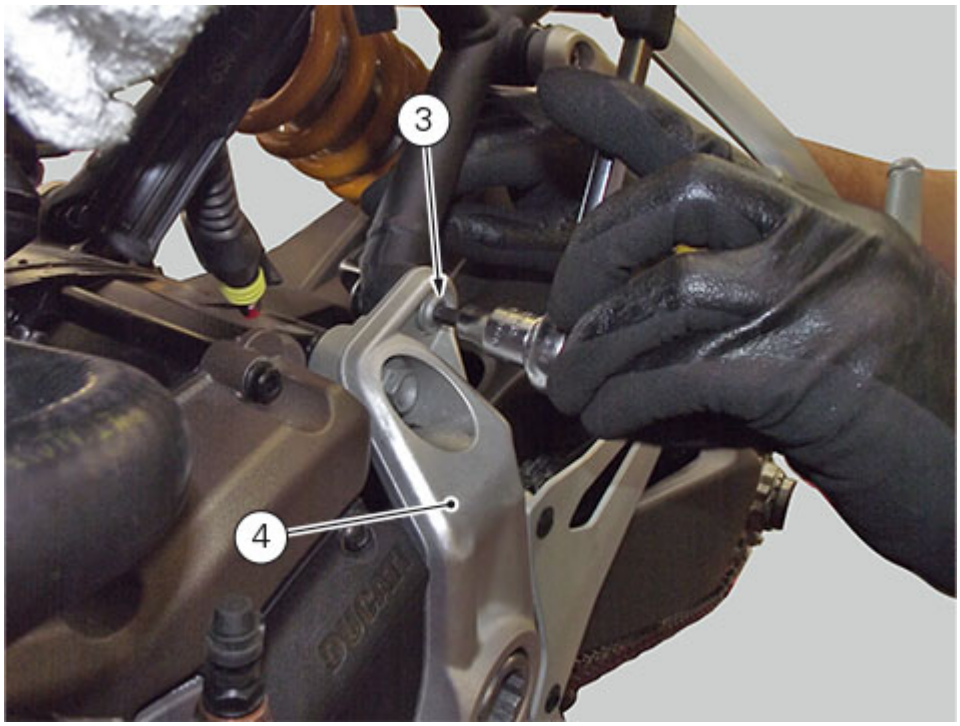

Place gearbox rod on splined shaft (2) and tighten screw (1) to a torque of 10Nm±10%.

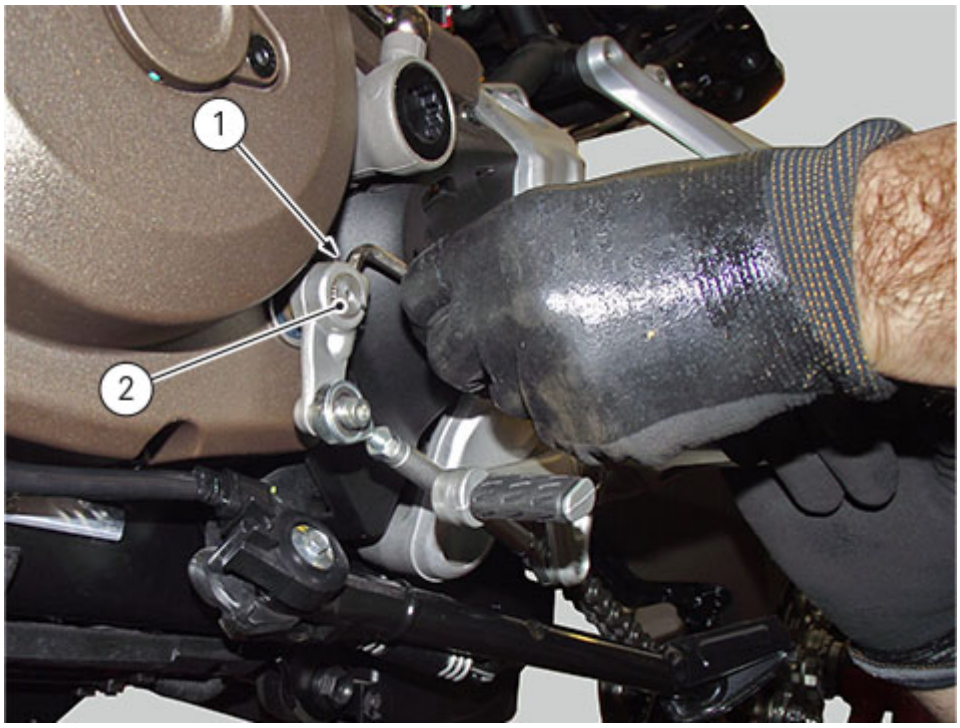

Tighten screw (3) with pre-applied threadlocker to a torque of 24Nm±5%.

Note
When screw is installed for the third time, replace it with one of the same type with pre-applied threadlocker.

Tighten upper pin (8) with nut (6) to a torque of 60Nm±5% after having applied the indicated product.
Tighten lower screw (5) to a torque of 45Nm ±5% after having applied the indicated product.
Tighten special screw (9) to a torque of 45Nm ±5% after having applied the indicated product.

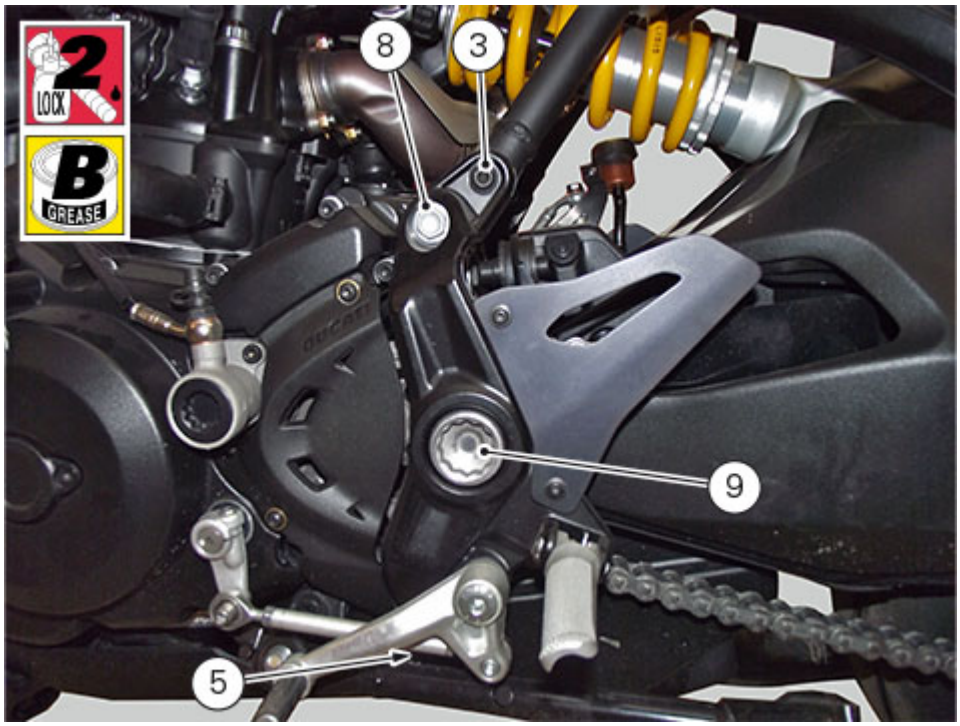

RH PLATE

Refit the complete rear brake control, by restoring the RH footpeg holder plate outfit with brake master cylinder, reservoir and lever as well as from wirings and hoses (Refitting the rear brake control).
Restore rear brake connector (18) connection and cable passage with tie (17).

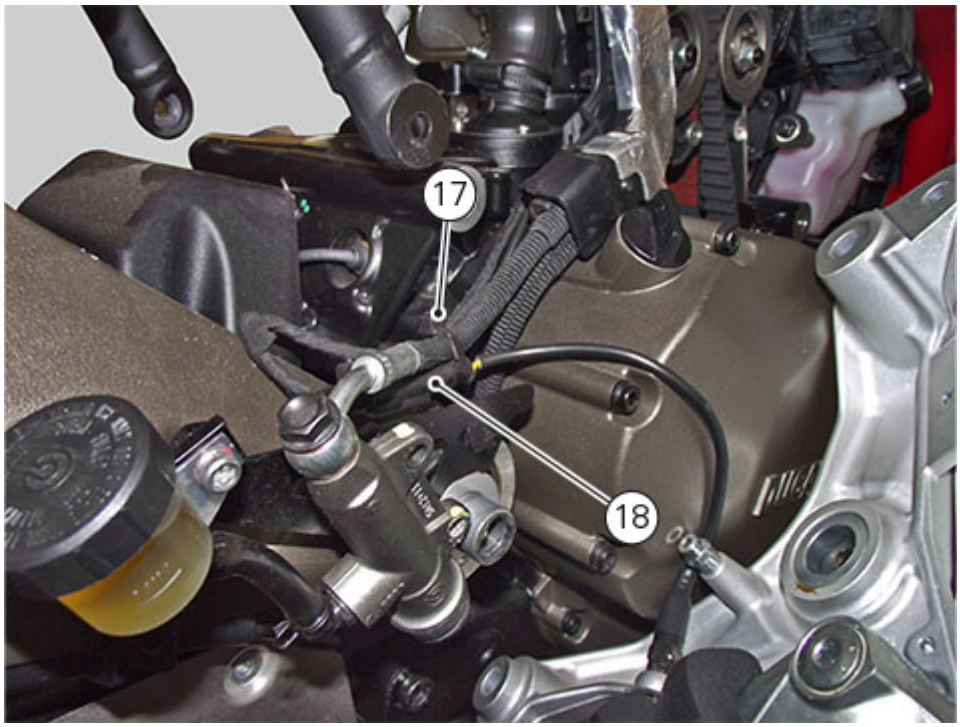

Position the RH footpeg holder plate (7) and start special screw (16).

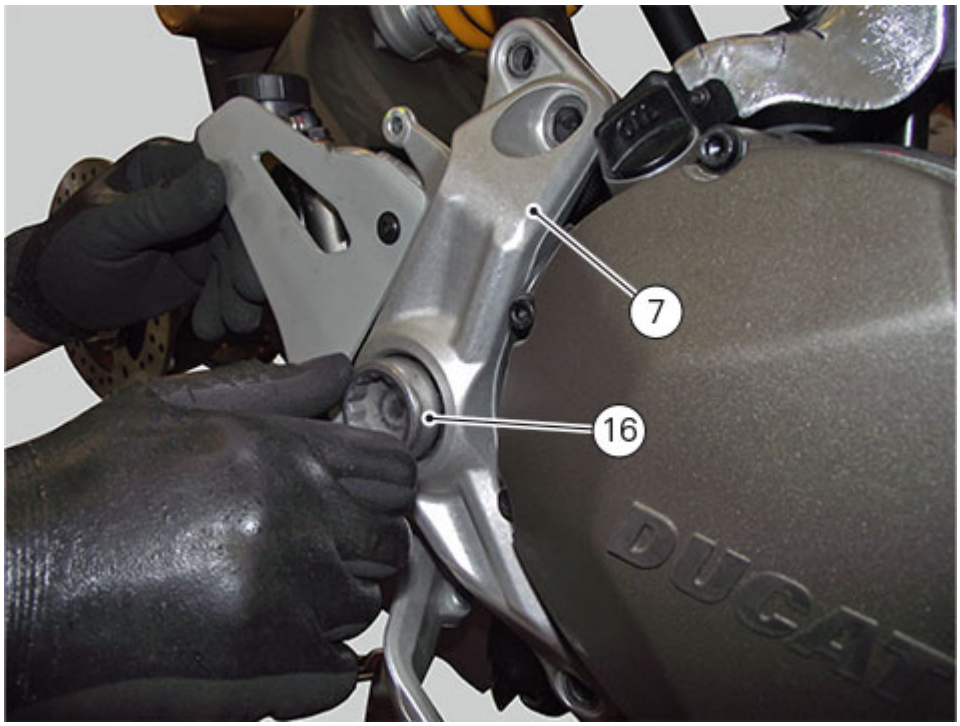

Start lower retaining screw (15).



Start upper retaining screw (13) on rear subframe, together with nut (14).



Tighten the two retaining screws (12) of the brake master cylinder (11) to a torque of 2Nm±10%.

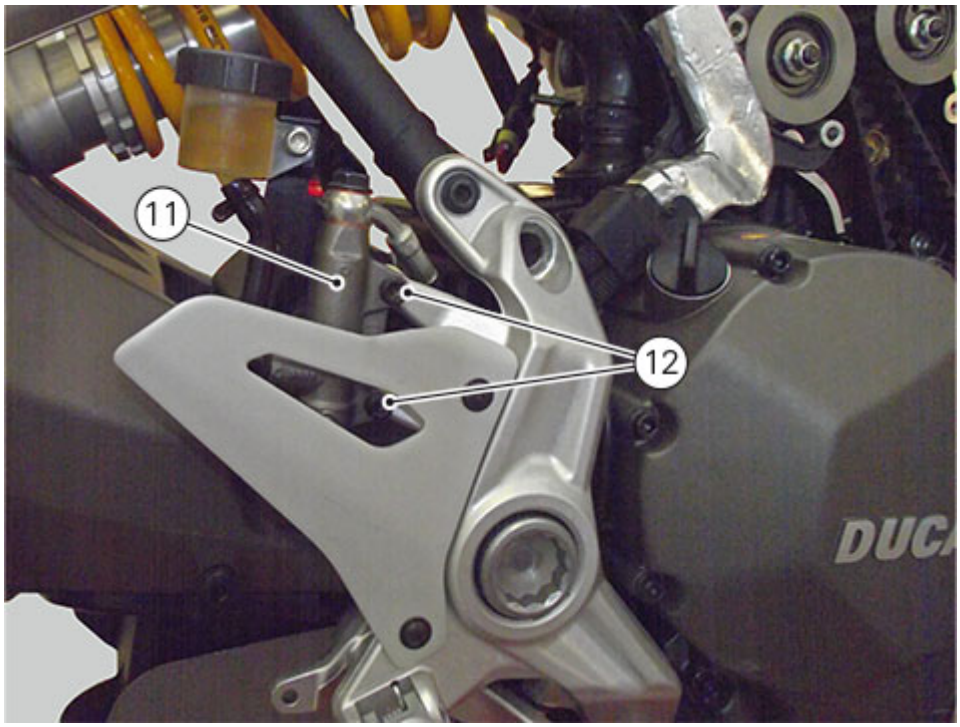

Position pin (8) in its seat working on vehicle LH side, and start upper retaining nut (6) on RH side.

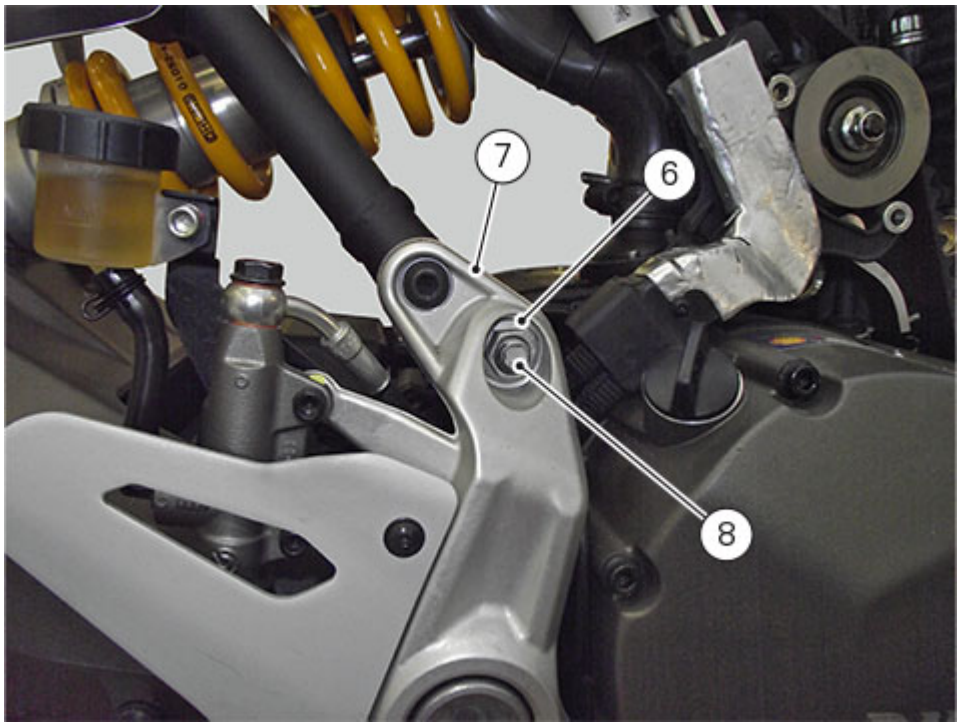

Restore retainer (10) on brake master cylinder rod (11).

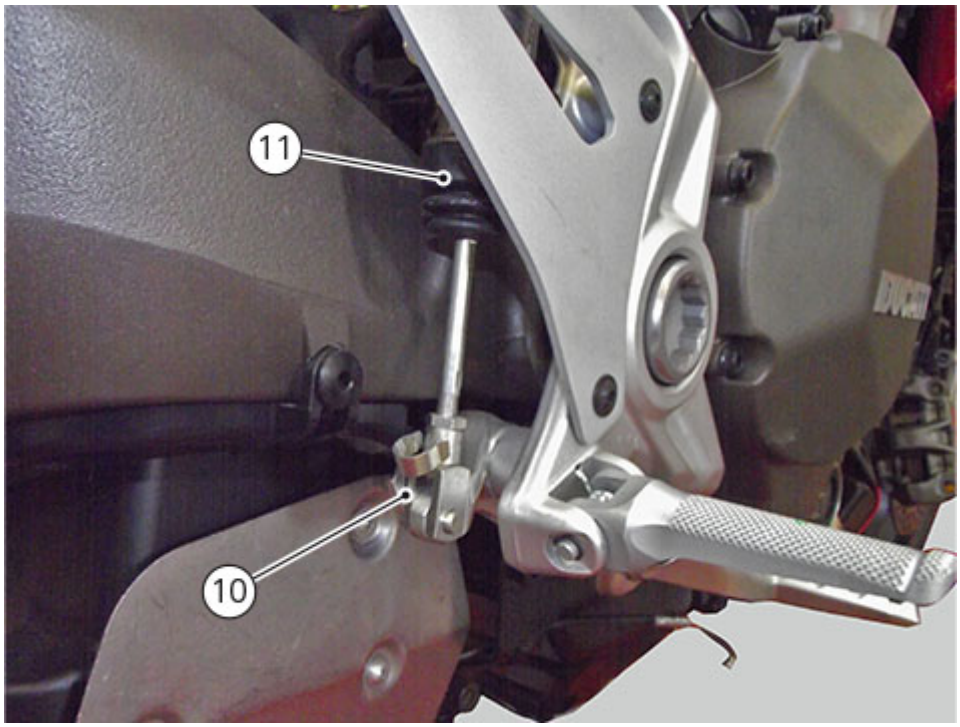

Tighten screw (13) and nut (14) with pre-applied threadlocker to a torque of 24Nm±5%.

Note
When screw is installed for the third time, replace it with one of the same type with pre-applied threadlocker.

Tighten upper pin (8) with nut (6) to a torque of 60Nm±5% after having applied the indicated product.
Tighten lower screw (15) to a torque of 45Nm ±5% after having applied the indicated product.
Tighten special screw (16) to a torque of 45Nm ±5% after having applied the indicated product.

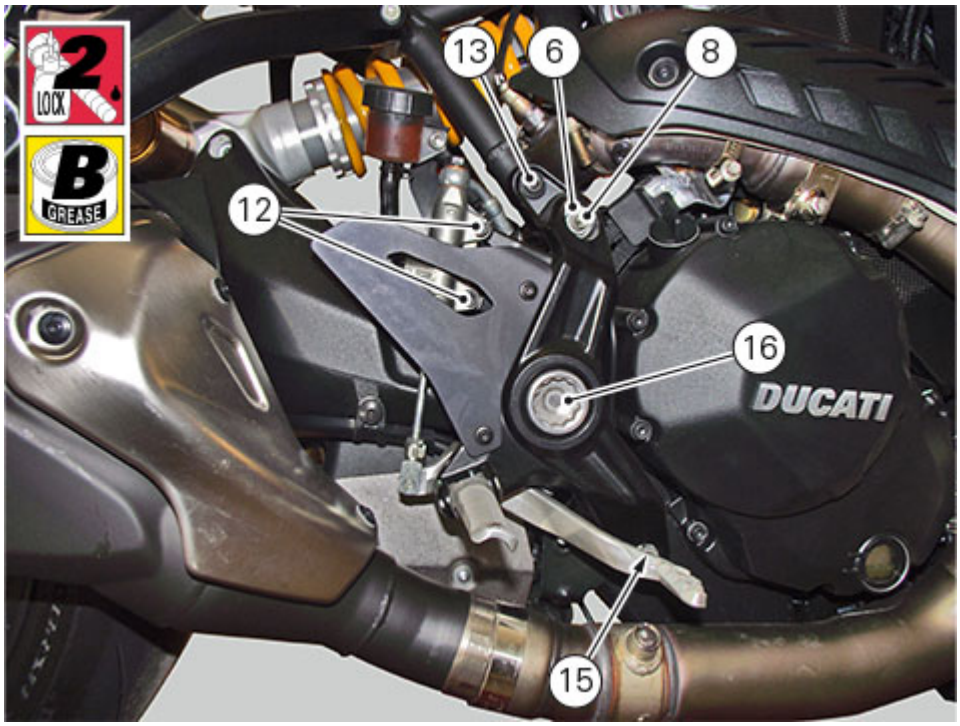

HEEL GUARD

Follow the same procedure for both heel guards.
If heel guard (19) has been removed, position it on the relevant footpeg holder plate and tighten the two screws (20) to a torque of 8Nm±10%, after applying the indicated product.

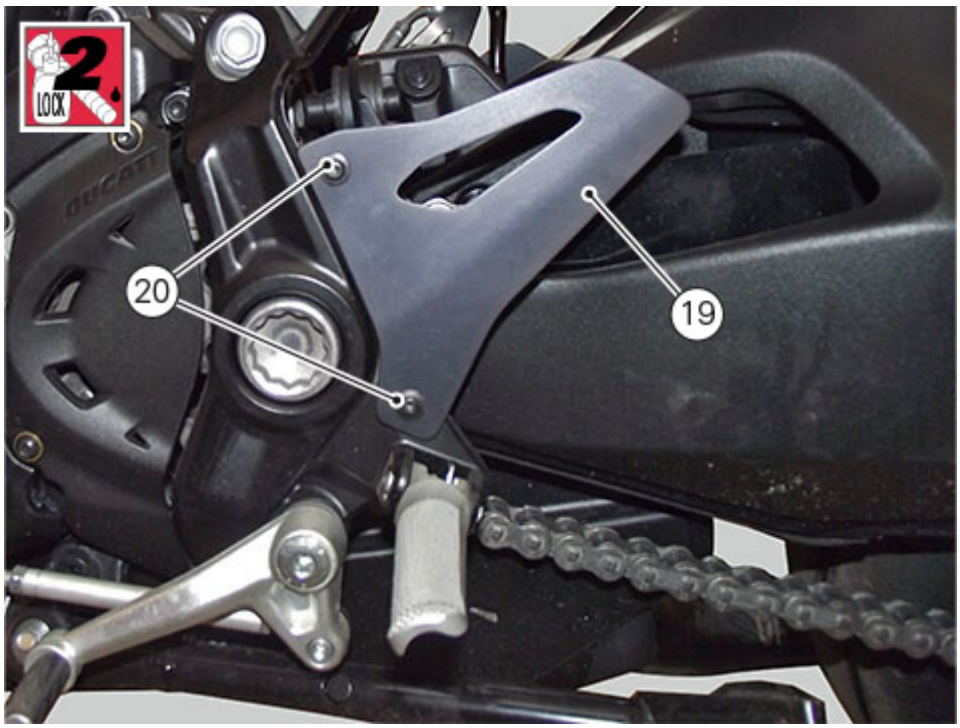

Removing the footpeg holder plate

LH PLATE

Loosen screw (1) of gearbox rod and slide it out of splined shaft (2).

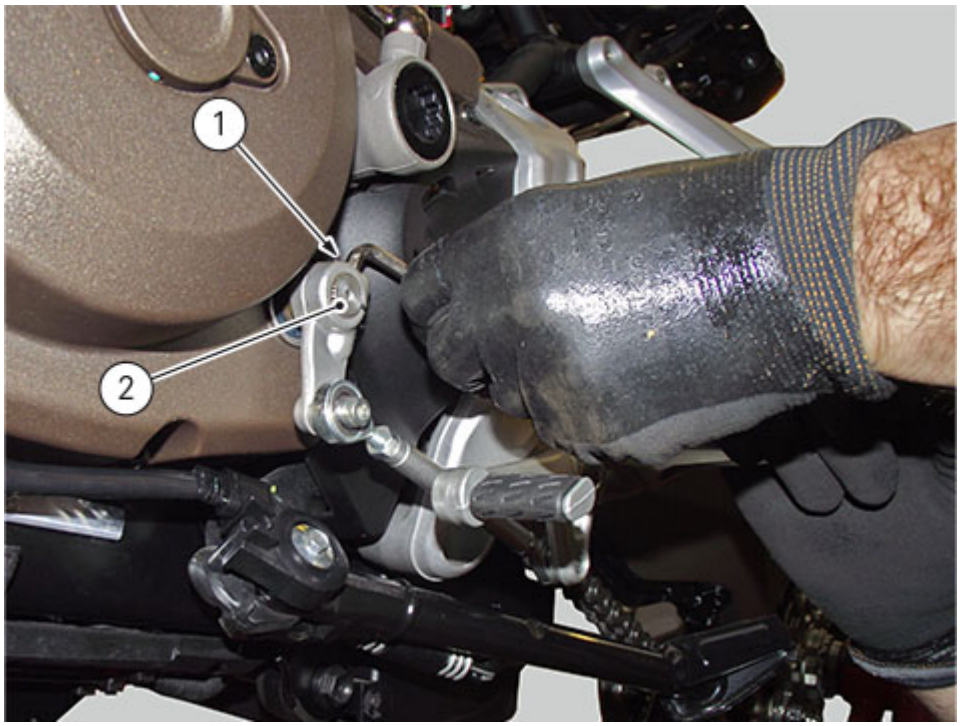

Loosen screw (3) securing LH plate (4) to rear subframe.

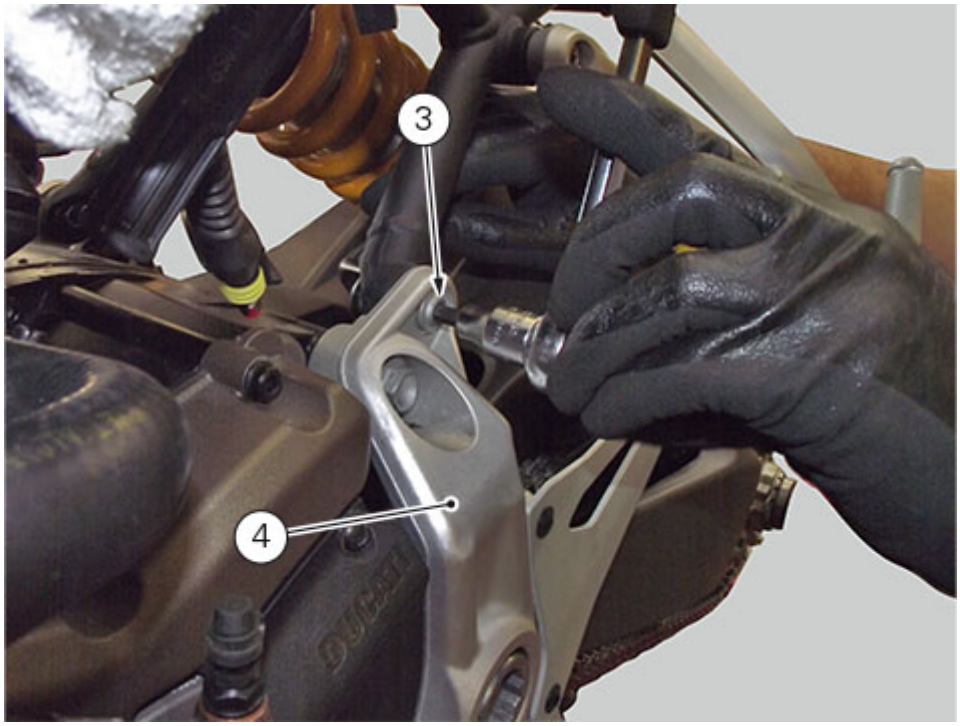

If footpeg has to be disassembled, refer to chapter "Removing the footpegs".

Undo the lower retaining screw (5) of the LH plate (4).

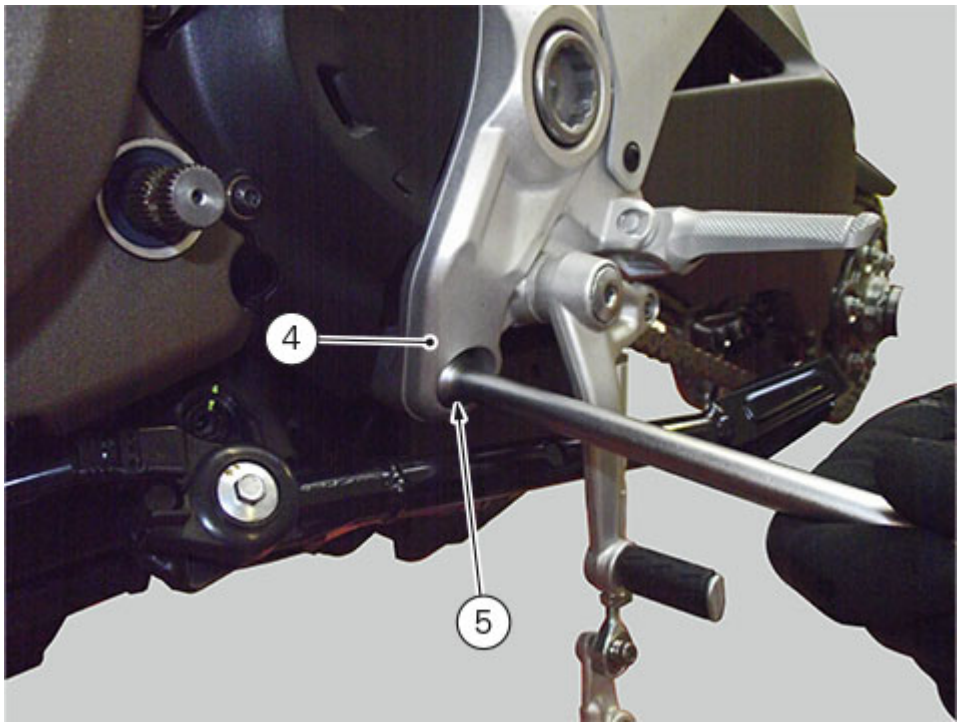

Loosen upper nut (6) on RH plate (7) and slide out upper pin (8) securing LH plate (4) to engine, from vehicle LH side.

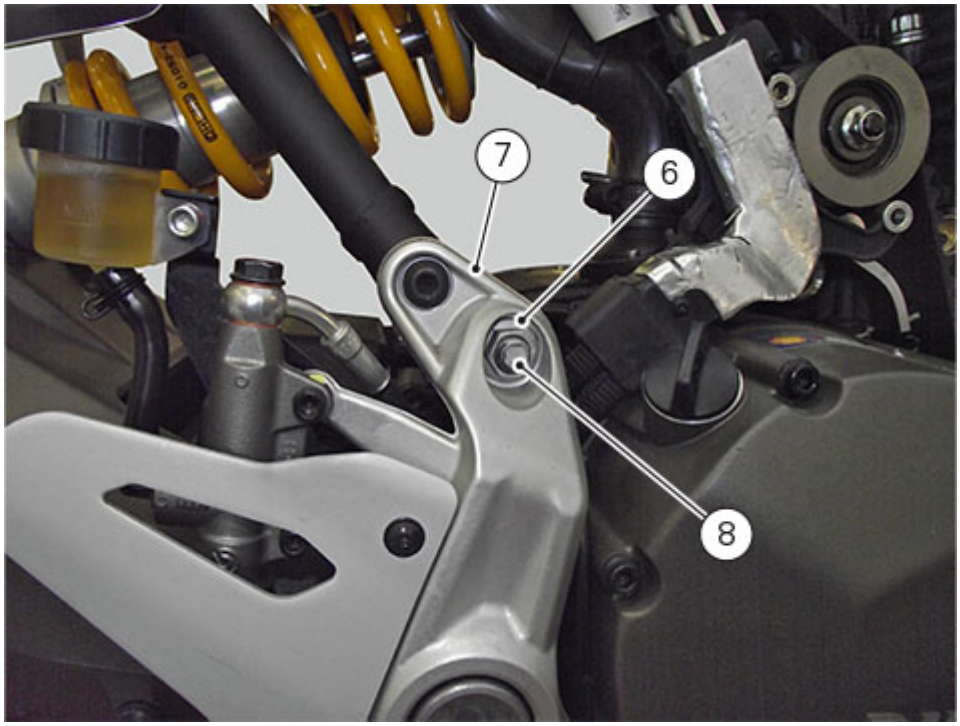

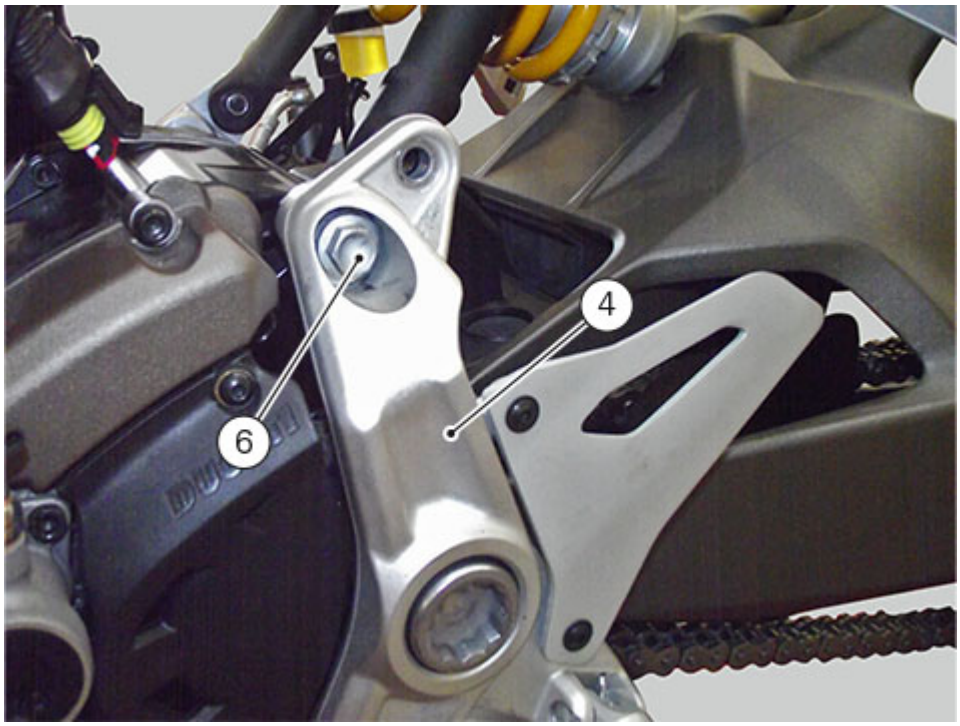

Loosen special screw (9) and slide out LH plate (4).

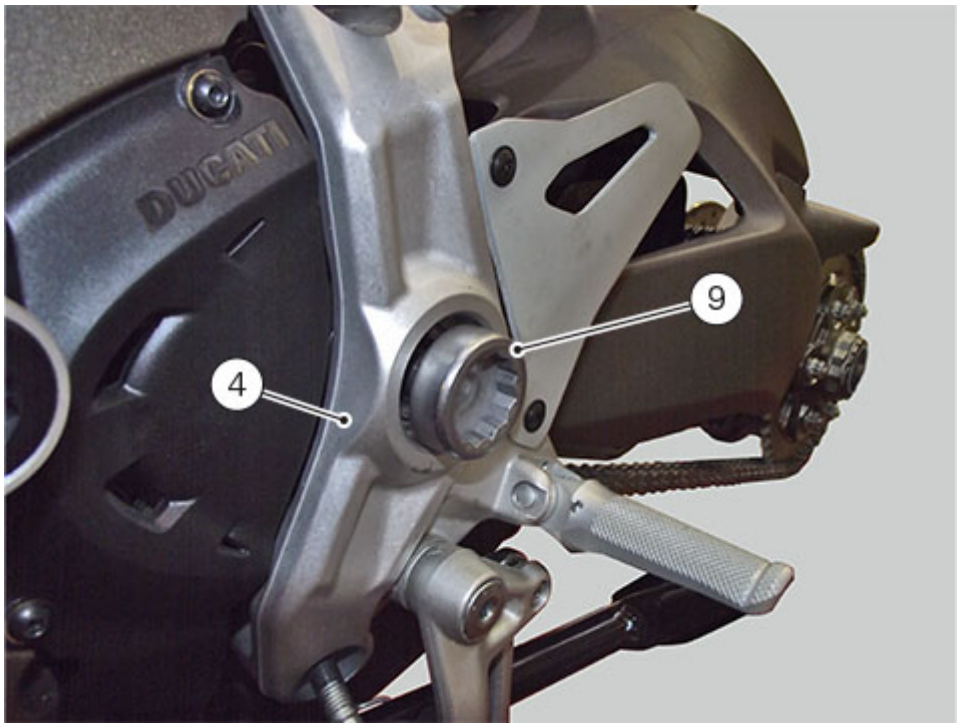

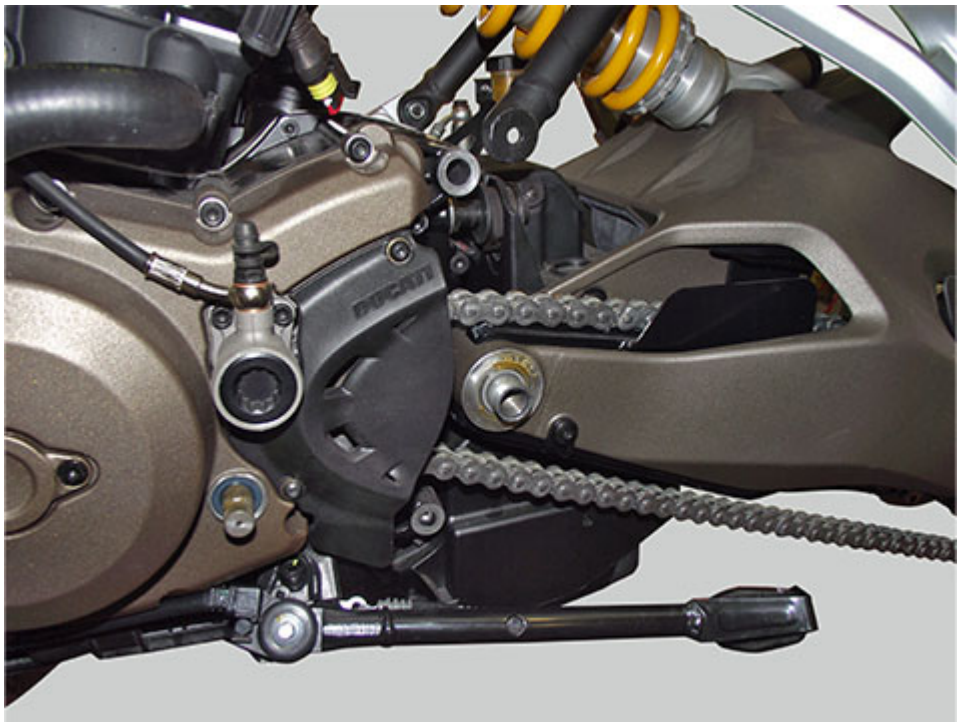

RH PLATE

Remove the complete rear brake control, by releasing RH footpeg holder plate from brake master cylinder, reservoir and lever as well as from wirings and hoses (Removing the rear brake control).
Working on vehicle RH side, release retainer (10) on rear brake master cylinder rod (11).

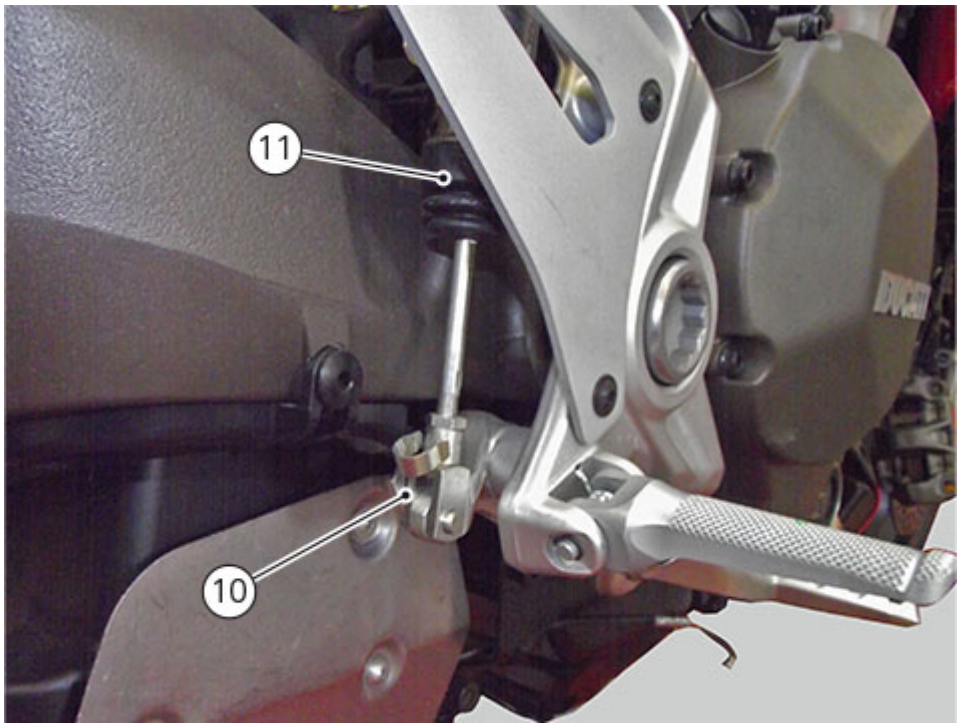

Loosen upper retaining nut (6) on RH plate (7) and slide out pin (8) on vehicle LH side.

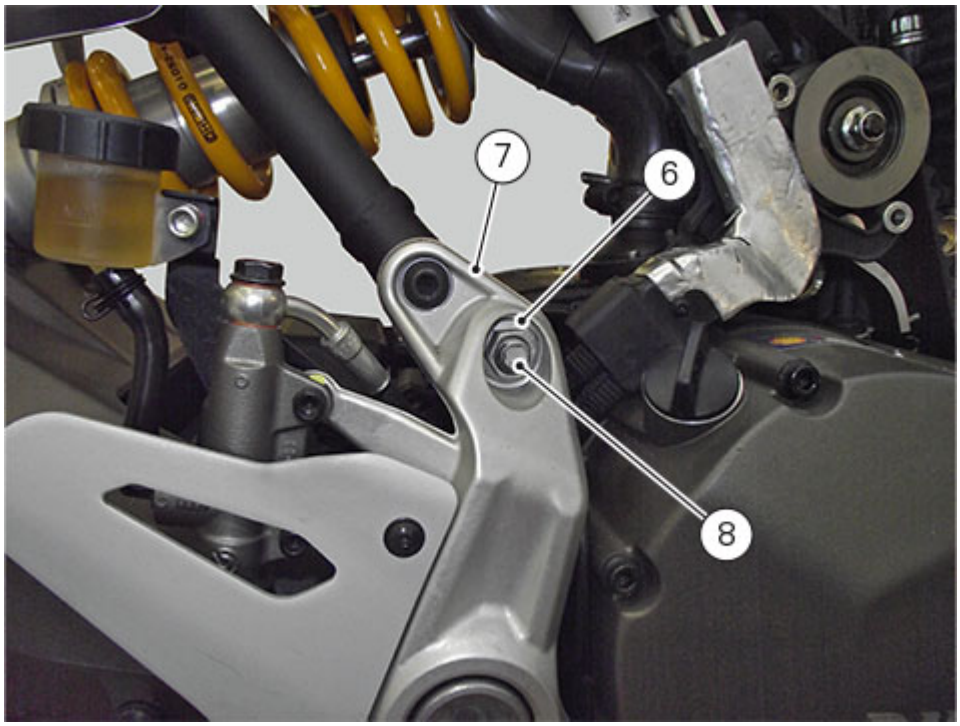

Remove the two retaining screws (12) from rear brake master cylinder (11).

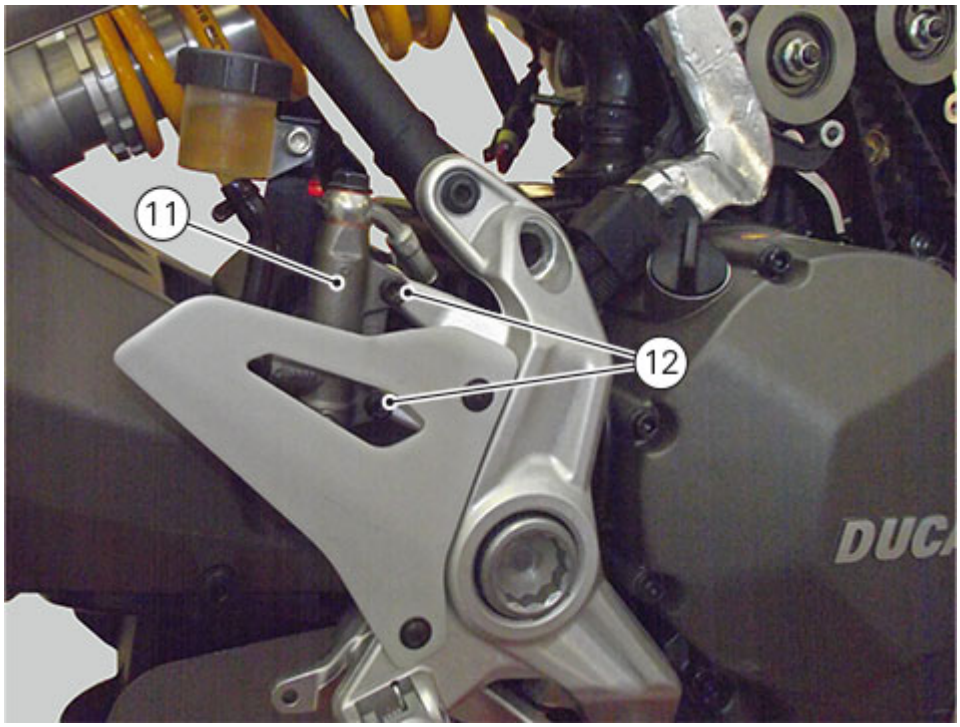

Loosen upper retaining screw (13) on rear subframe, collecting nut (14) from behind.



Undo the lower retaining screw (15) of the RH plate (7).



Remove special screw (16) and slightly slide out RH plate (7).

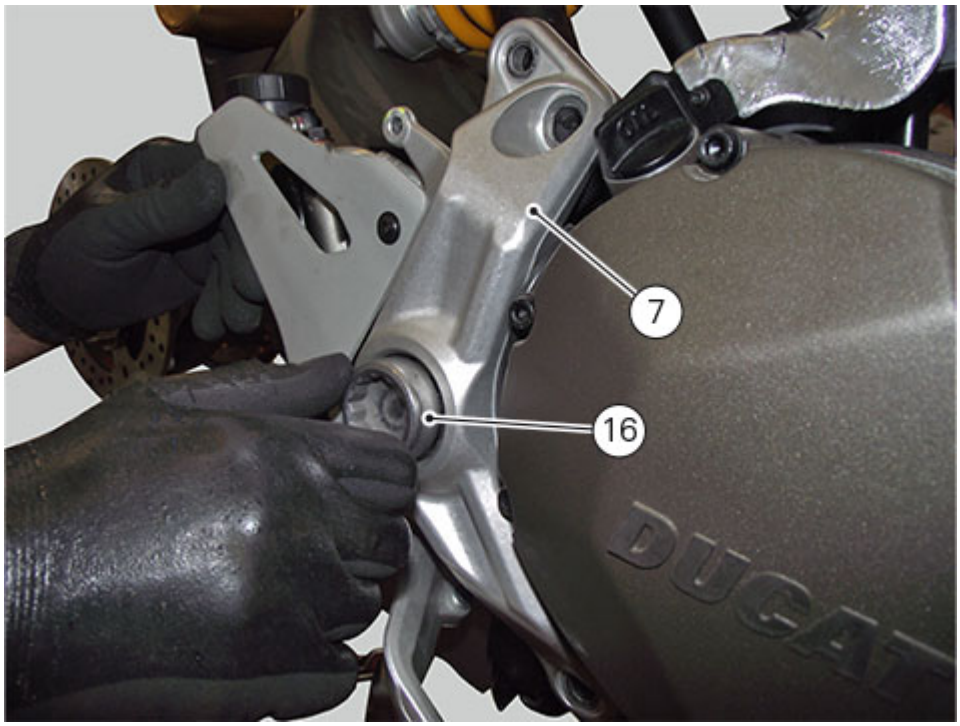

Remove tie (17) and disconnect rear brake connector (18).
Then slide out the complete RH plate.

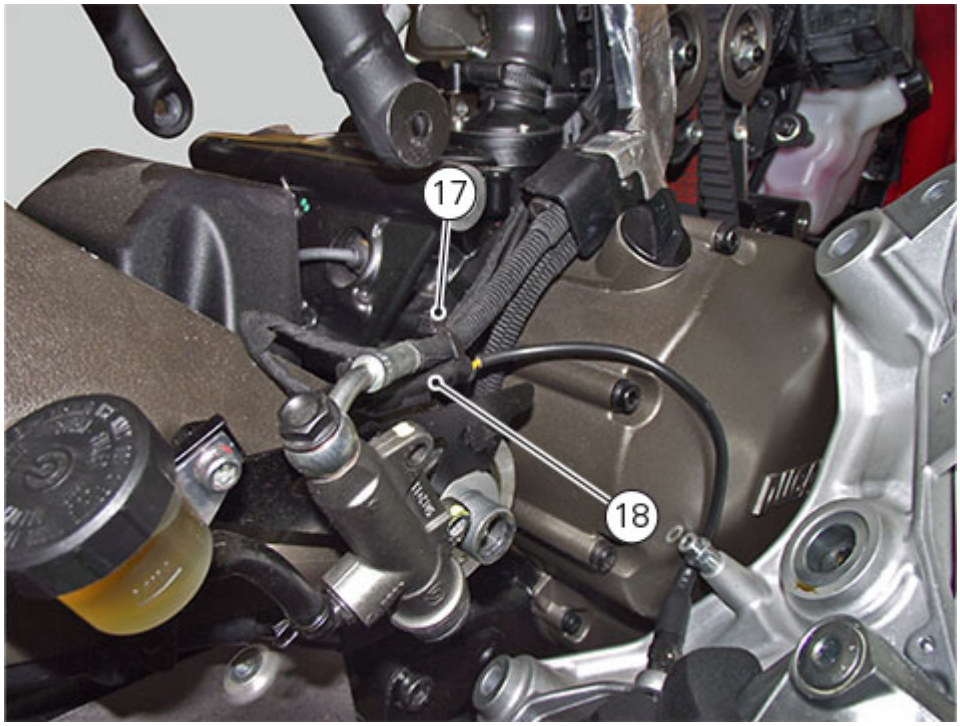

If footpeg has to be disassembled, refer to chapter "Removing the footpegs".

HEEL GUARD

Follow the same procedure for both heel guards. If heel guard (19) has to be removed, remove the two screws (20) and slide it out of the relevant footpeg holder plate.

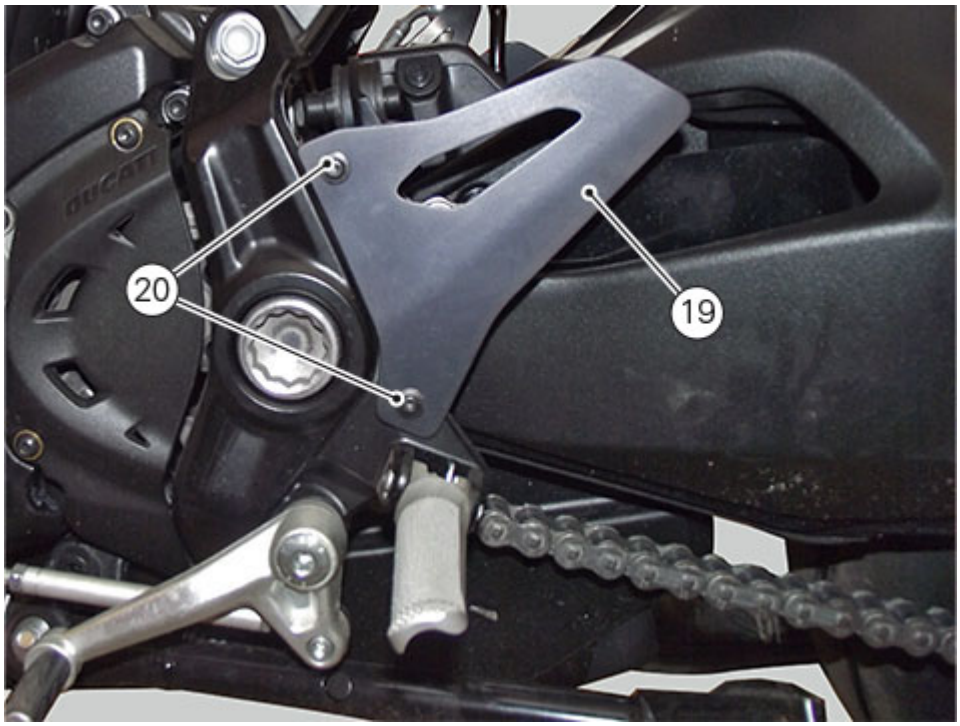
20
19

Refitting the footpegs

Note
The operations described in this section relate to one footpeg, but they apply also to those on the other side of vehicle.

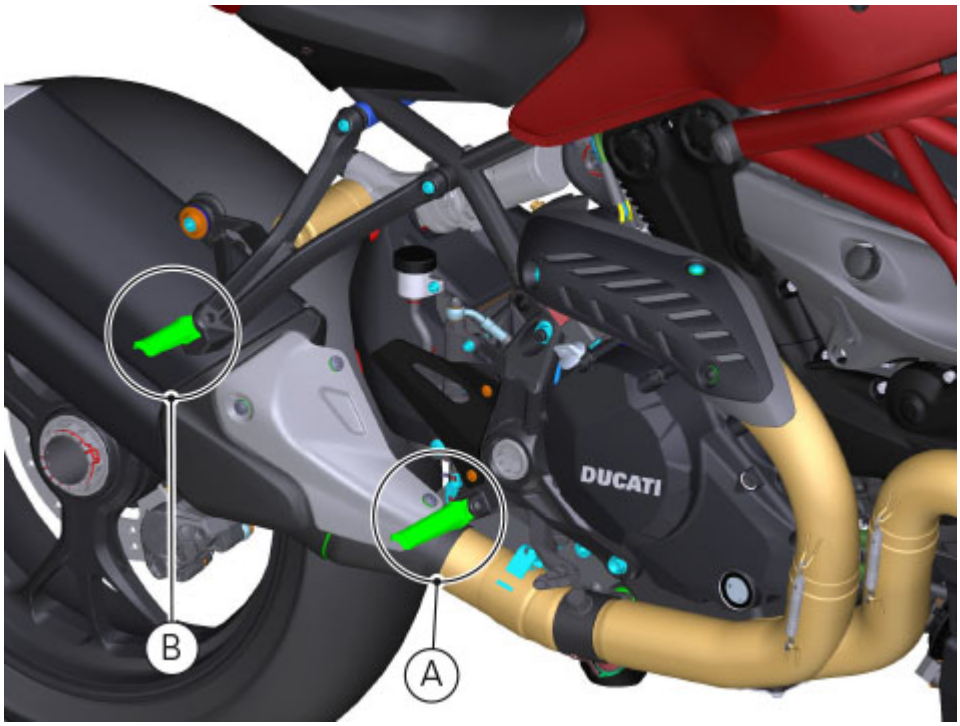

A: front footpegs
B: rear footpegs

Refitting the front footpegs (A)

Position spring (4).
Position footpeg (3) inserting the end (C) of spring (4) in the hole (D) of the frame plate.
Fit pin (2) as shown.
Lock pin (2) using circlip (1).

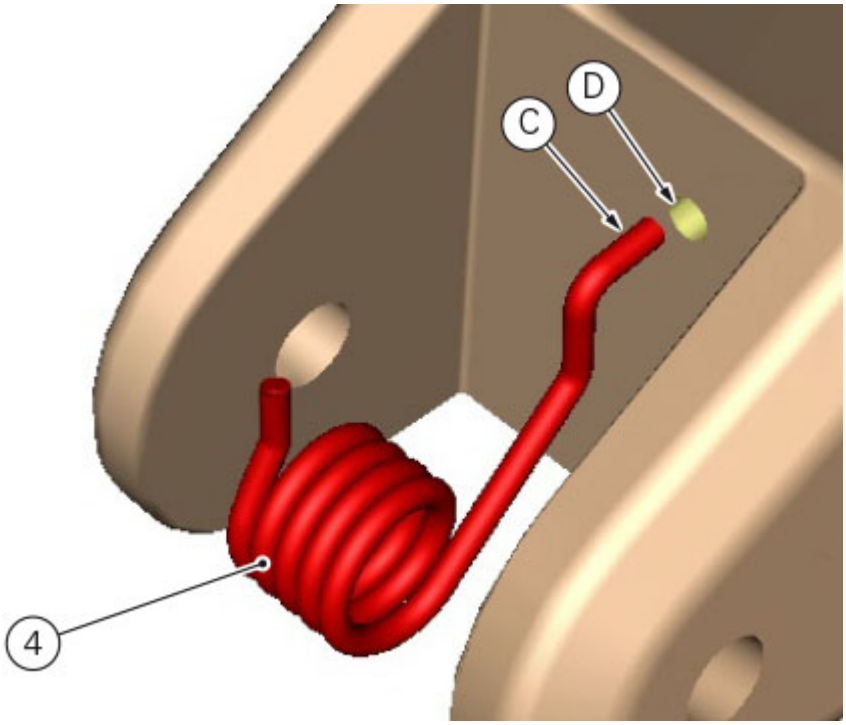

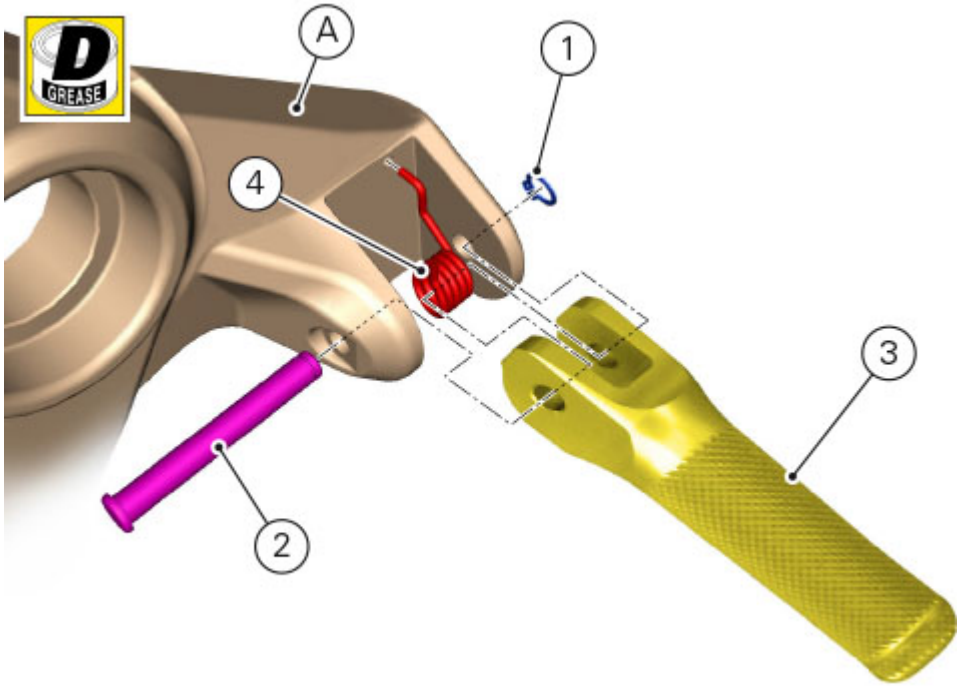

Refitting the rear footpegs (B)

Insert spring stopper (9) on plate (7), aiming it as shown.
Apply the indicated product to pin (6) and spring (11).
Insert the spring (11) into the special hole of the footpeg (7).
Fit the ball (10) on the spring (11).
Fit the footpeg to rear footpeg holder plate (7) fitting pin (6), positioning parts as shown.
Fasten pin using circlip (5).

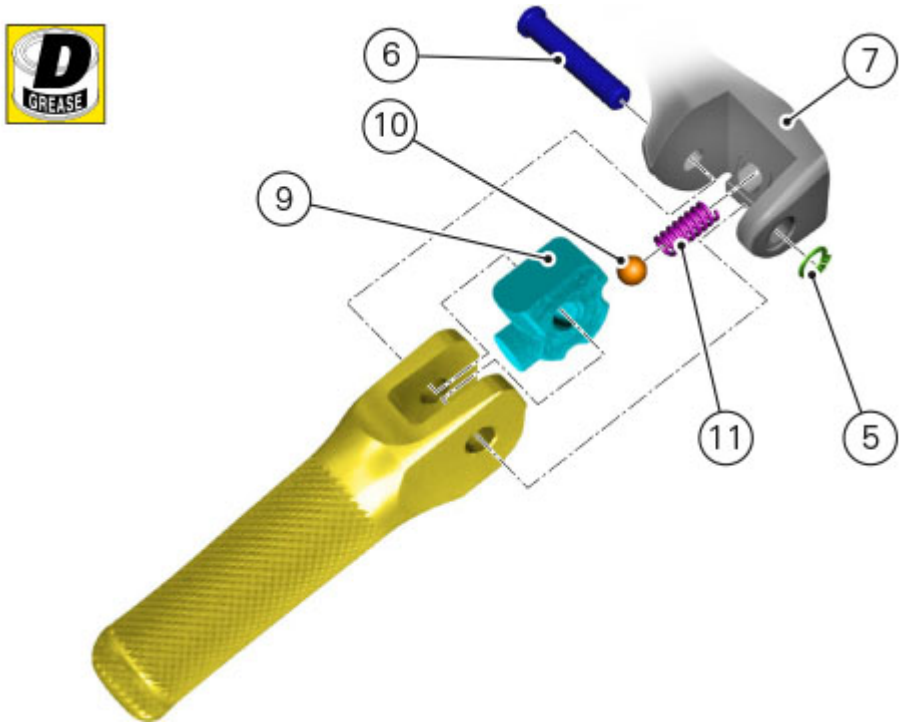

Removing the footpegs

Note
The operations described in this section relate to one footpeg, but they apply also to those on the other side of vehicle.

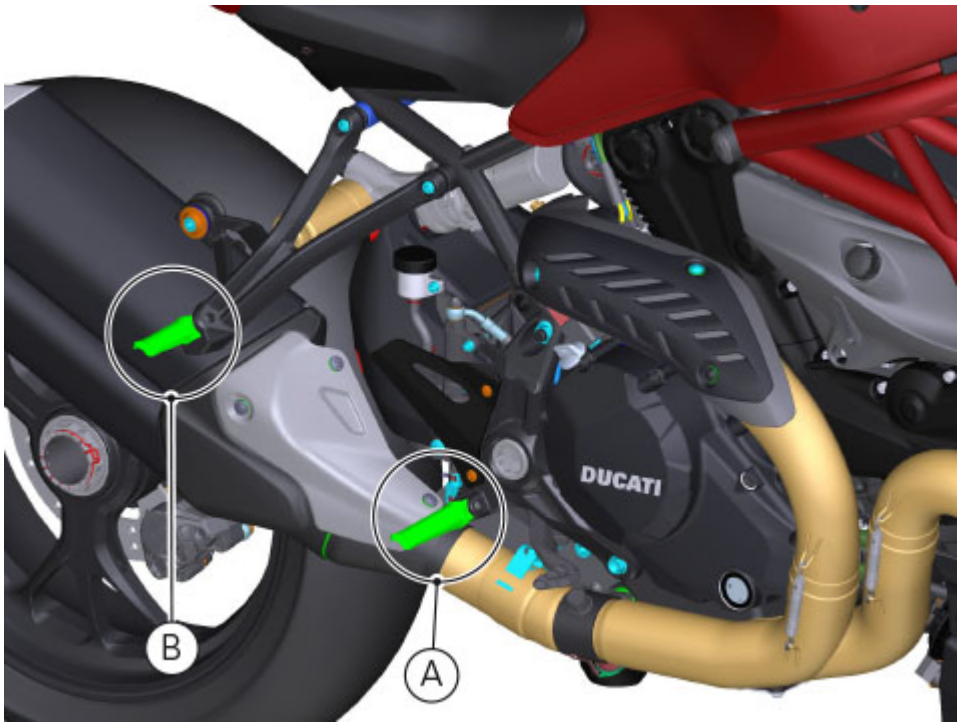

A: front footpegs
B: rear footpegs

Removing the front footpegs (A)

Remove the circlip (1) thereby releasing the pin (2).
Slide out pin (2), while supporting the footpeg (3).
Slide out footpeg (3) from its seat and collect spring (4).

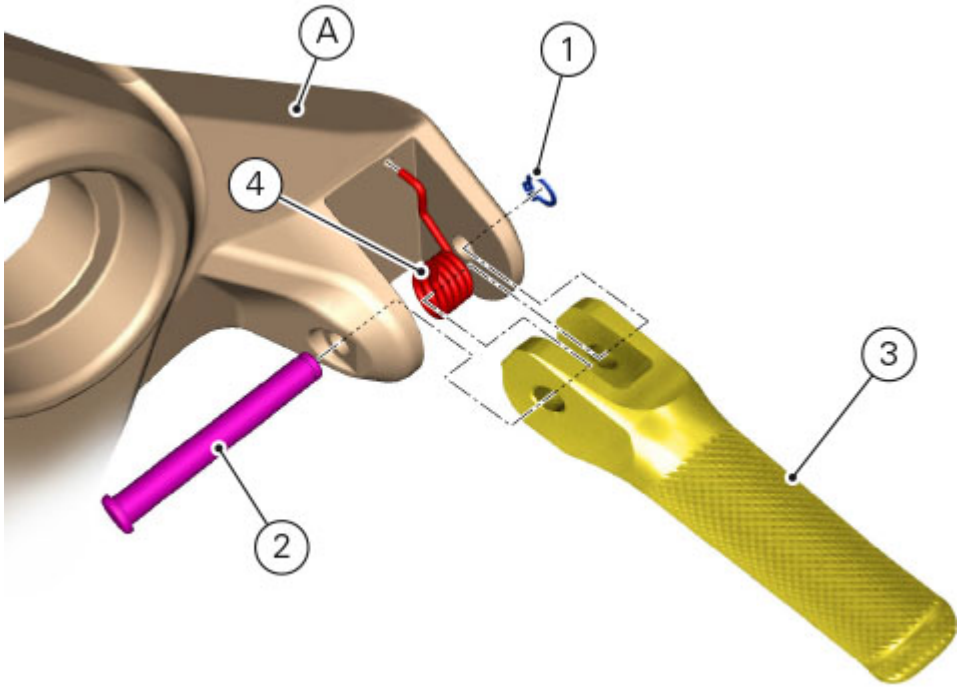

Removing the rear footpegs (B)

Remove the circlip (5) thereby releasing the pin (6).
Slide out pin (6) from rear footpeg holder plate (7), collecting footpeg (8) and, on the rear side, also footrest stopper (9) with ball (10) and spring (11).

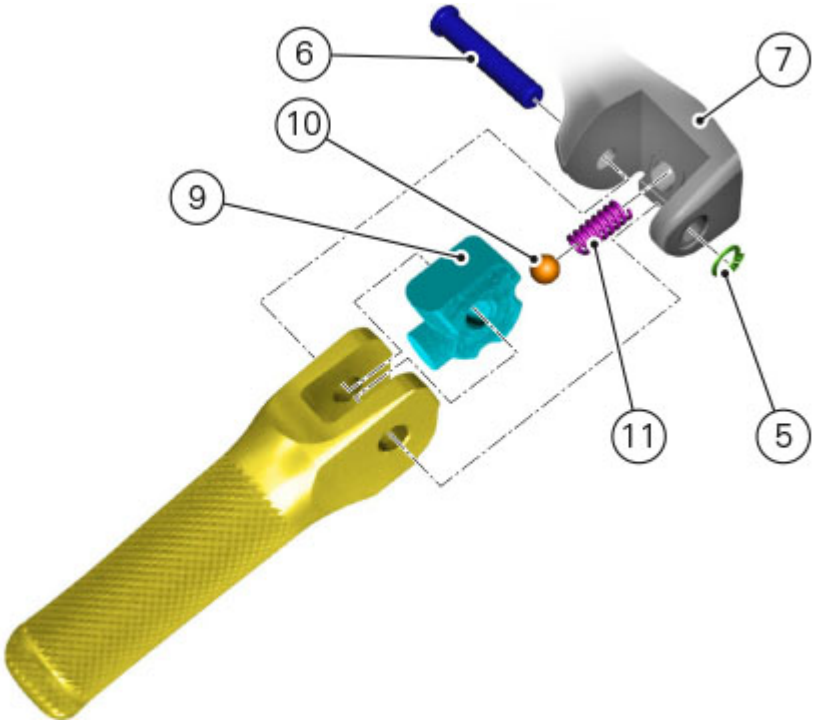

Refitting the side stand

Reassembling the side stand

Grease the side stand leg (8) with the specified product and fit it to the bracket (3). Secure it with the pin (7) and the nut (9).

Tighten nut (9) to a torque of 24Nm ± 10%.

Position the side stand return springs (5) and (6) and attach them to fasteners (B) and (C) on bracket and stand.

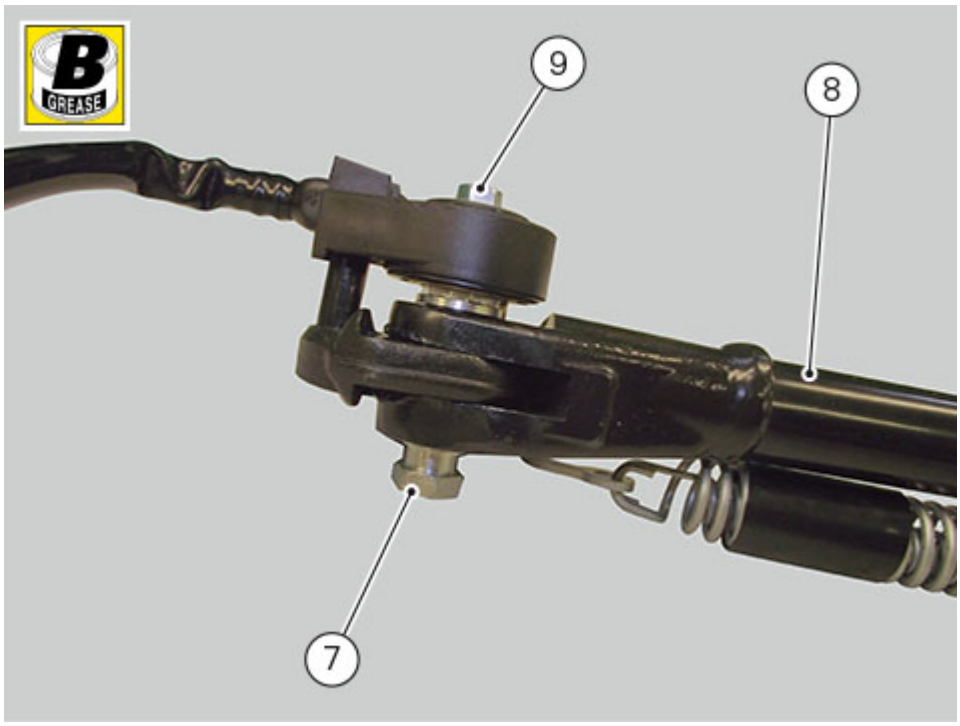

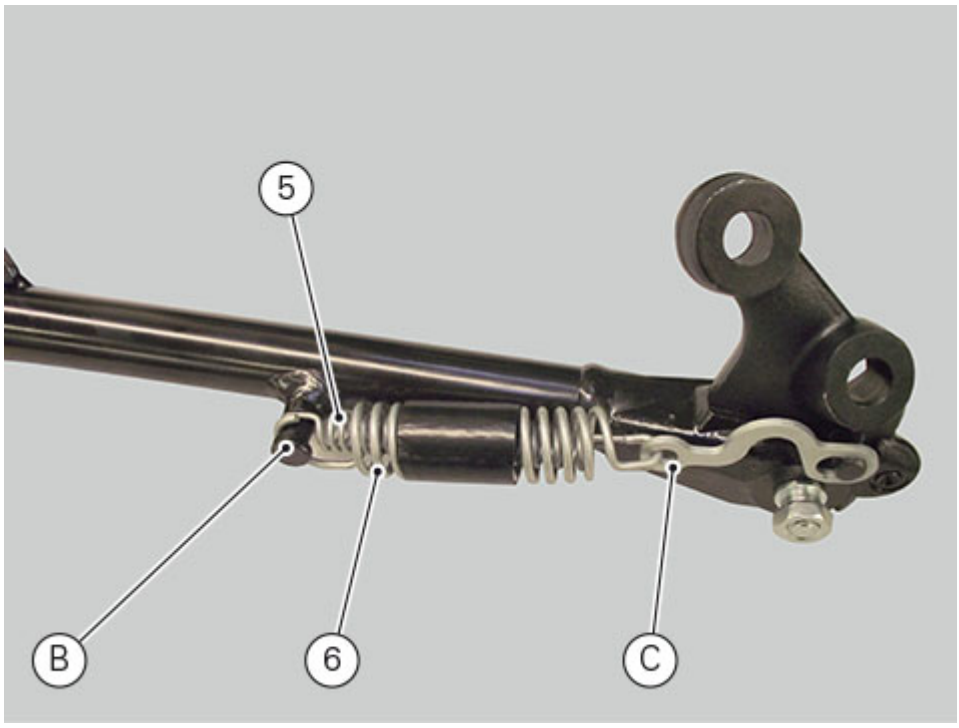

Place the switch (1) on the plate, on its pin (7).

Fit the retaining screw (4) with the specified threadlocker and tighten to a torque of 5Nm±10%.

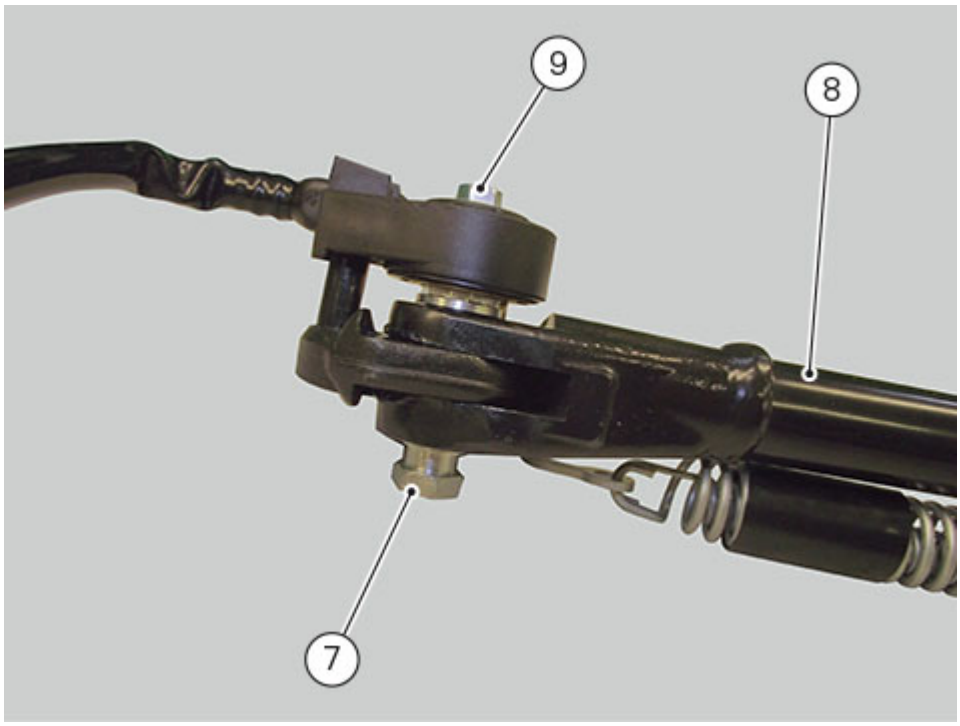

Refitting the side stand
Position the side stand support bracket (3) to the frame and fit the two screws (2) smeared with the specified threadlocker.
Tighten the screws (2) to a torque of 36Nm ± 10%.

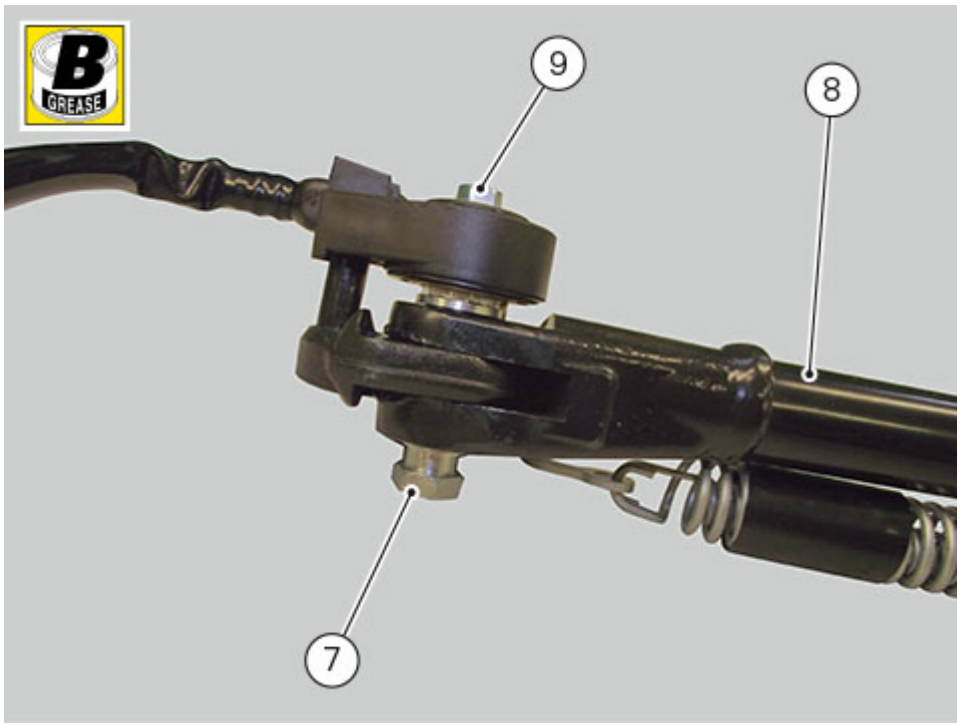

Connect the side stand switch connector (A) to the main wiring.
To position stand switch wiring, refer to table "Routing of wiring on frame".

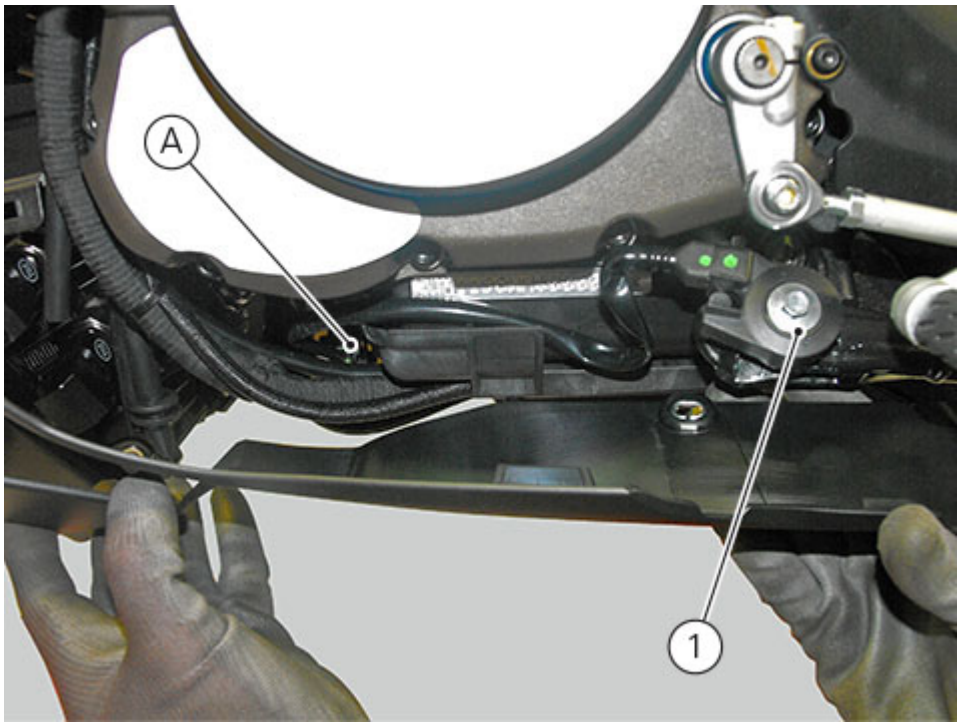
A
1

Removing the side stand

Remove the oil cooler lower cover (Removing the lubrication system).
Disconnect connector (A) of the stand switch (1) from the main wiring.

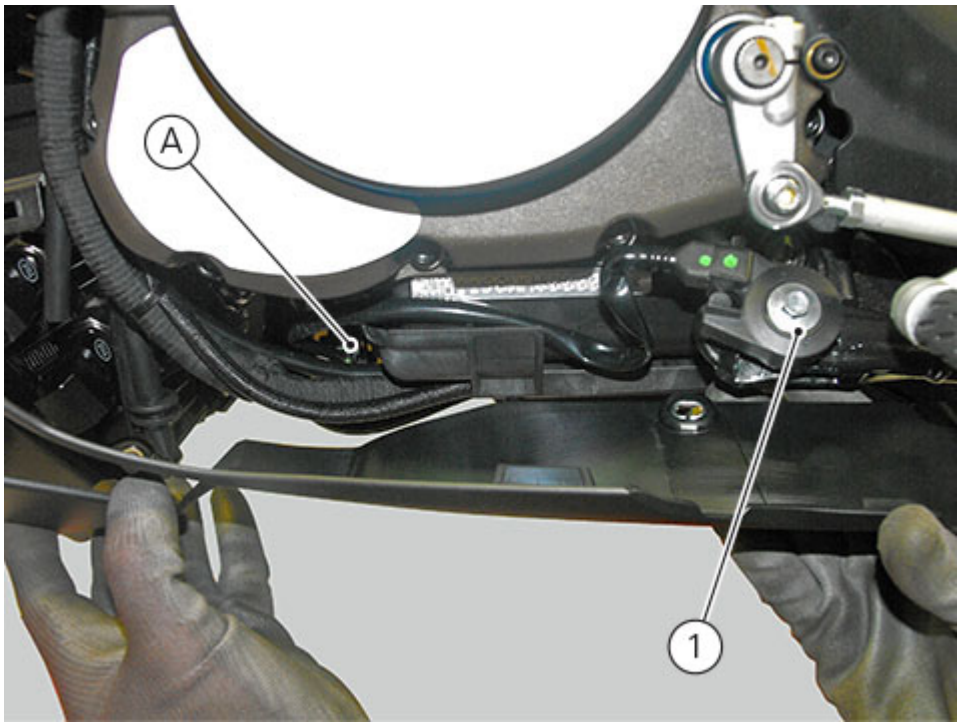

Undo the two fastening screws (2) of the side stand support plate (3) to the engine and remove the complete side stand.

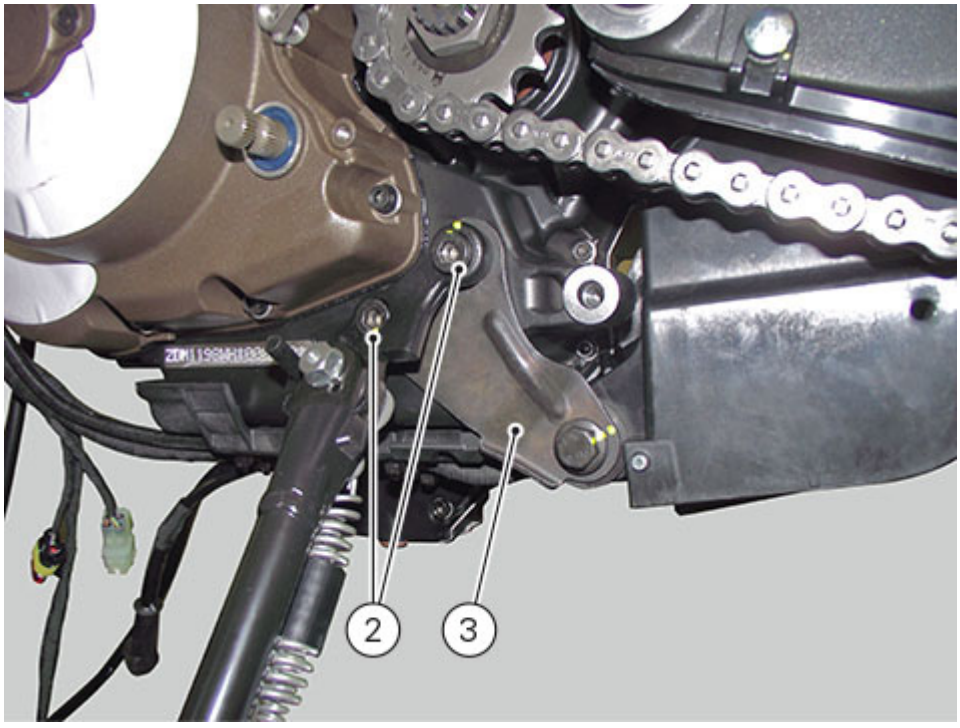

Disassembling the side stand
Undo the retaining screw (4) and remove the side stand switch (1).

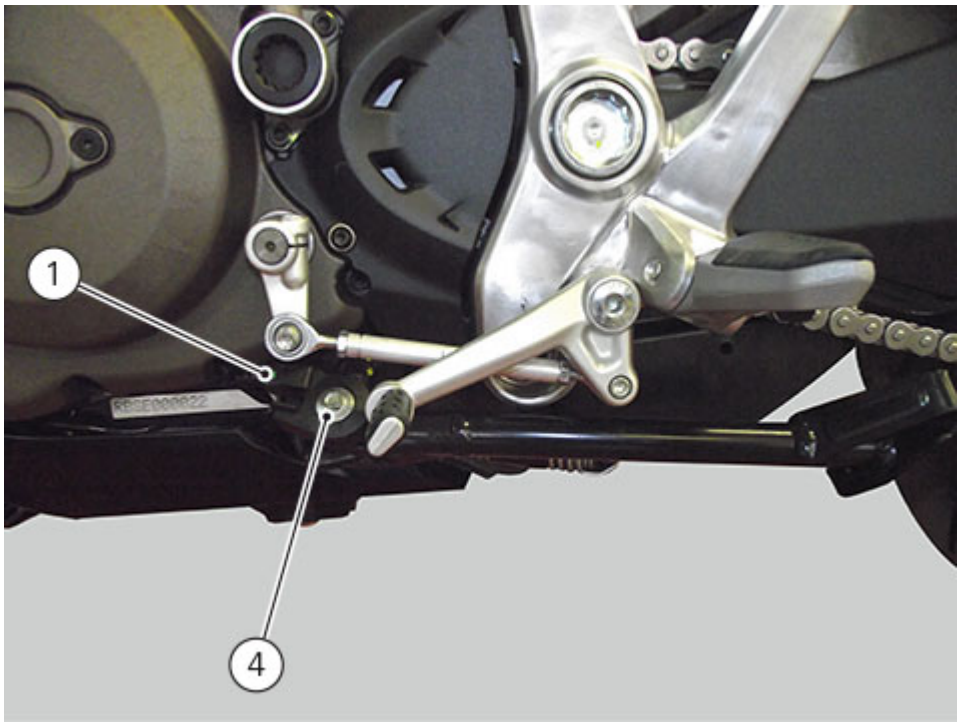

Release stand return springs (5) and (6) disengaging them from retainers (B) and (C).
Unscrew the pin (7) securing the side stand to the bracket and remove side stand (8) and nut (9).

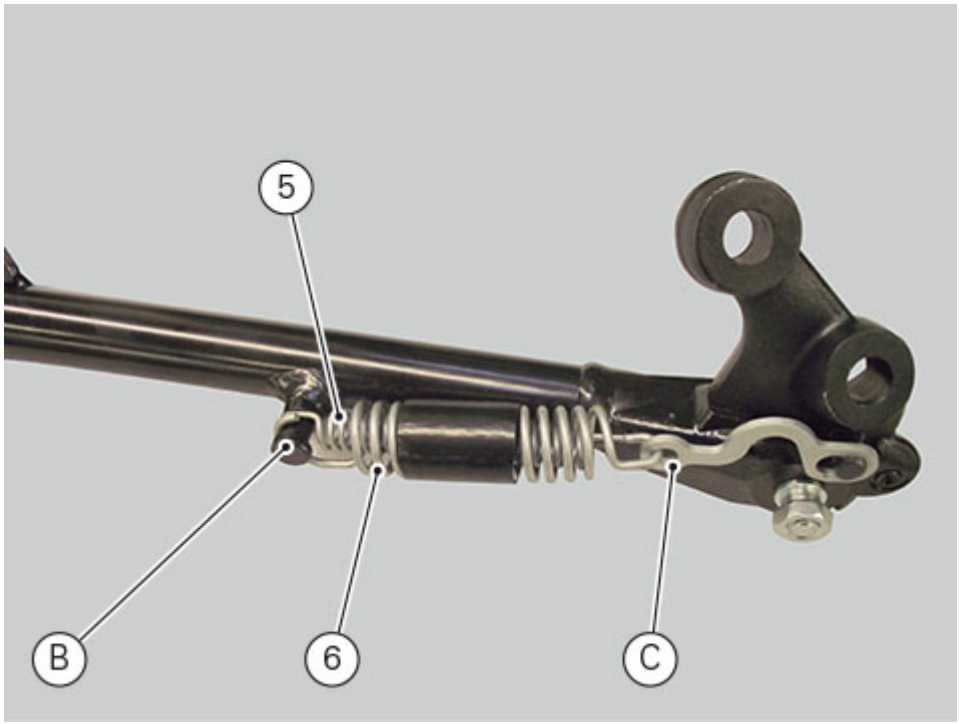

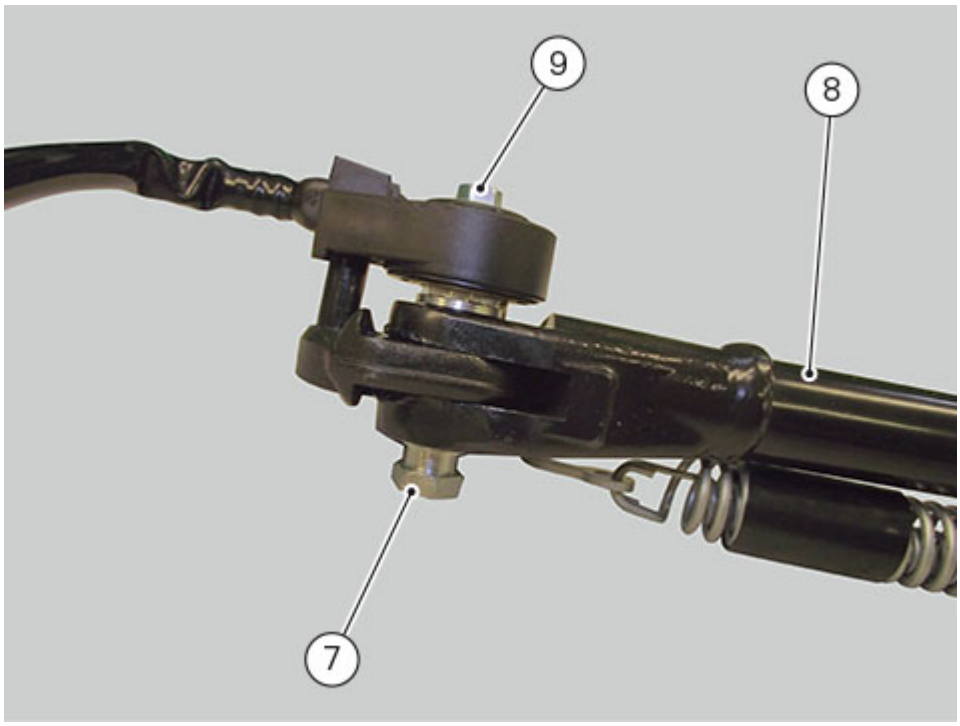

Inspecting the side stand

Fit the side stand to the plate and check that there is no excessive clearance. Ensure that the ends of the side stand are not bent with respect to the shank.
A side stand which shows signs of deformation or breakage must be replaced immediately.

Refitting the light assembly

FRONT LIGHT ASSEMBLY

If previously removed, refit front turn indicators.

Refitting the turn indicators (USA VERSION, ONLY)
The operations describe the procedure for one turn indicator, but apply to both of them.
If previously disassembled, re-assemble turn indicator by tightening screws (18) and (17) to a torque of 5Nm ±10%, taking care to insert lower cover (20) support (19) and (C) edges (B) inside spacer (20) groove (D).

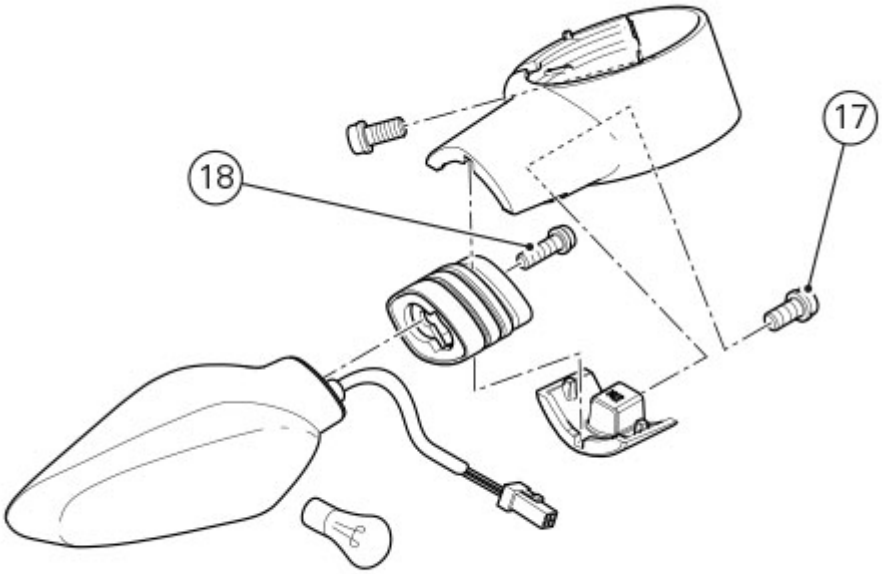

Duly route wiring.

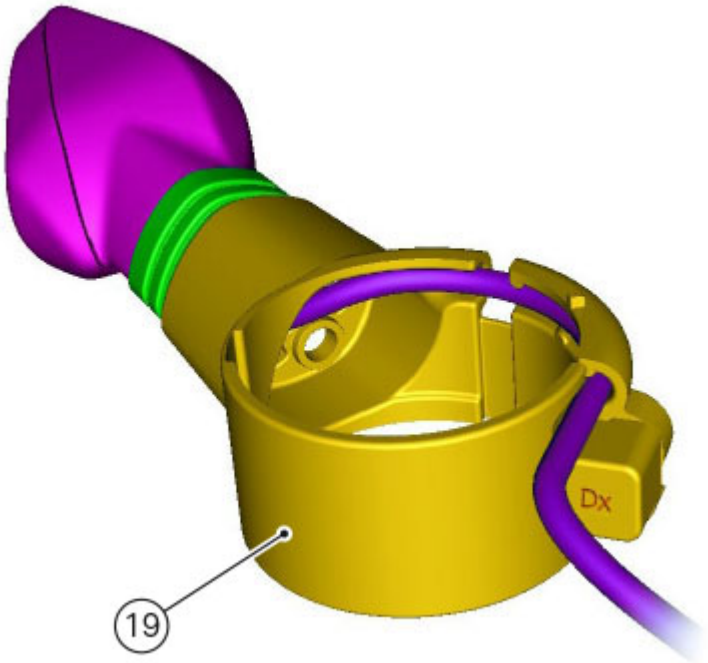

Important
Do not invert the positions of the supports having a specified positioning direction on vehicle

Fit the complete turn indicator on the relevant fork leg, and tighten screw (16) fully home, then loosen it by two

complete turns (360°+360°).

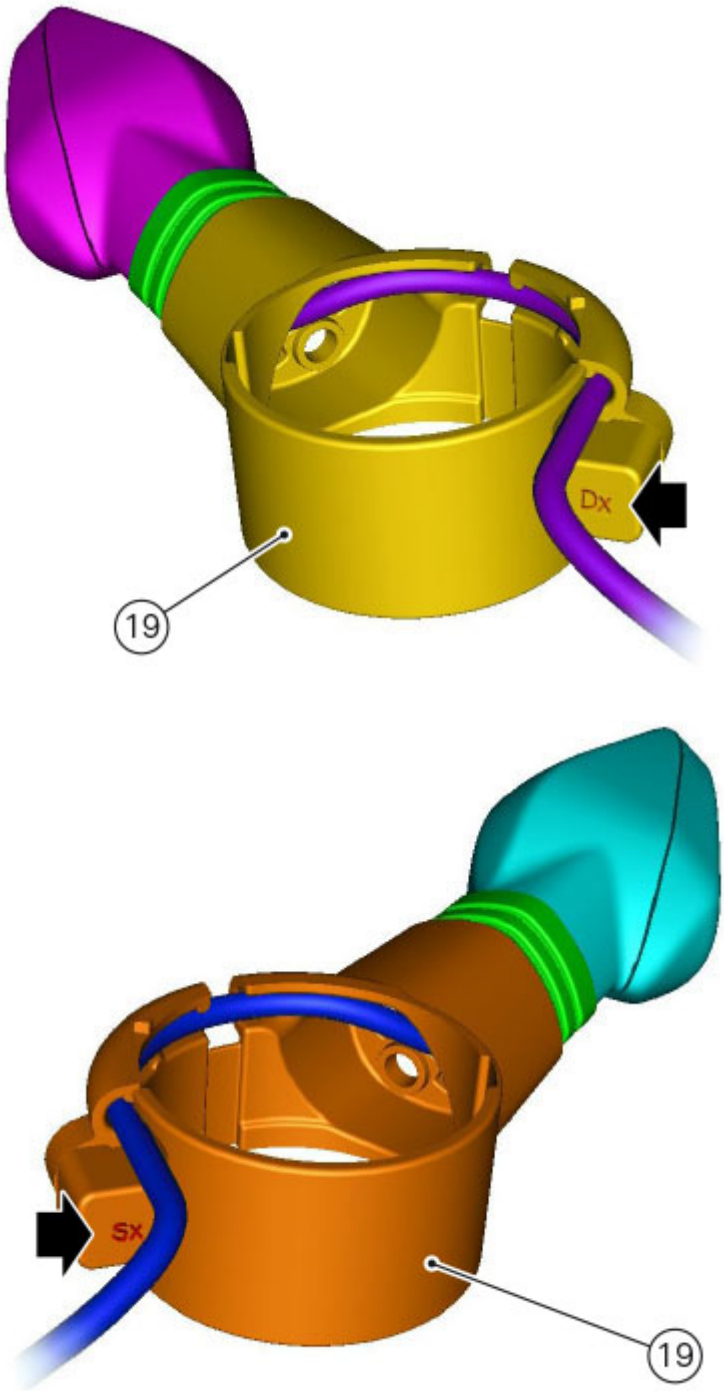

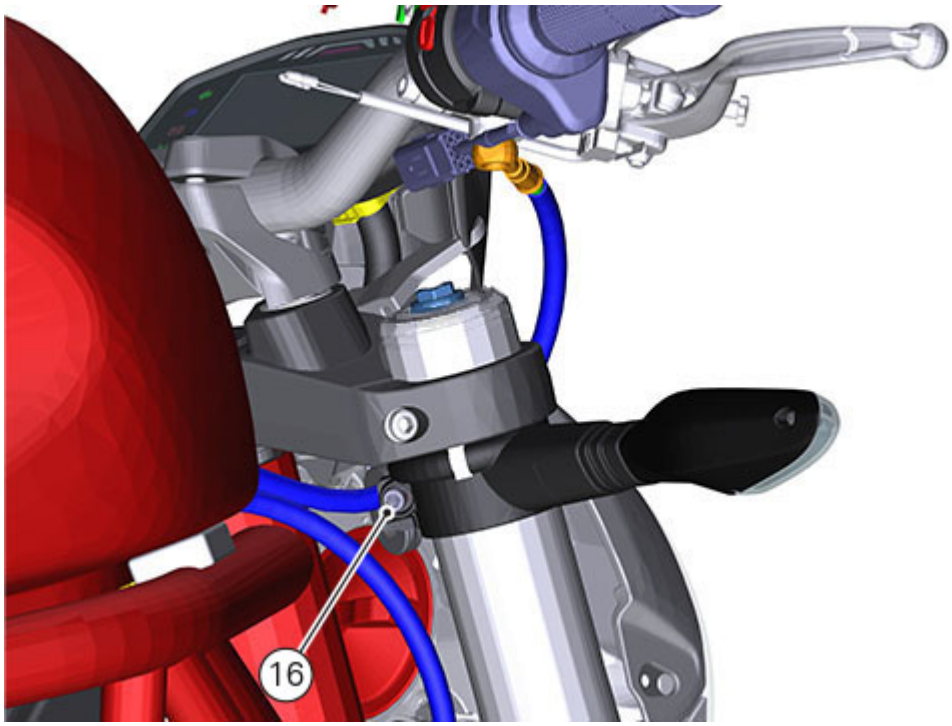

Refit fork leg on steering head (Refitting the front fork).

Refitting the turn indicators

The operations describe the procedure for one turn indicator, but apply to both of them.
Fit turn indicator (8), complete with collar (11) and plate (10), duly inside its seat.
Tighten screw (9) to a torque of 3Nm±10% after having applied the specified threadlocker.

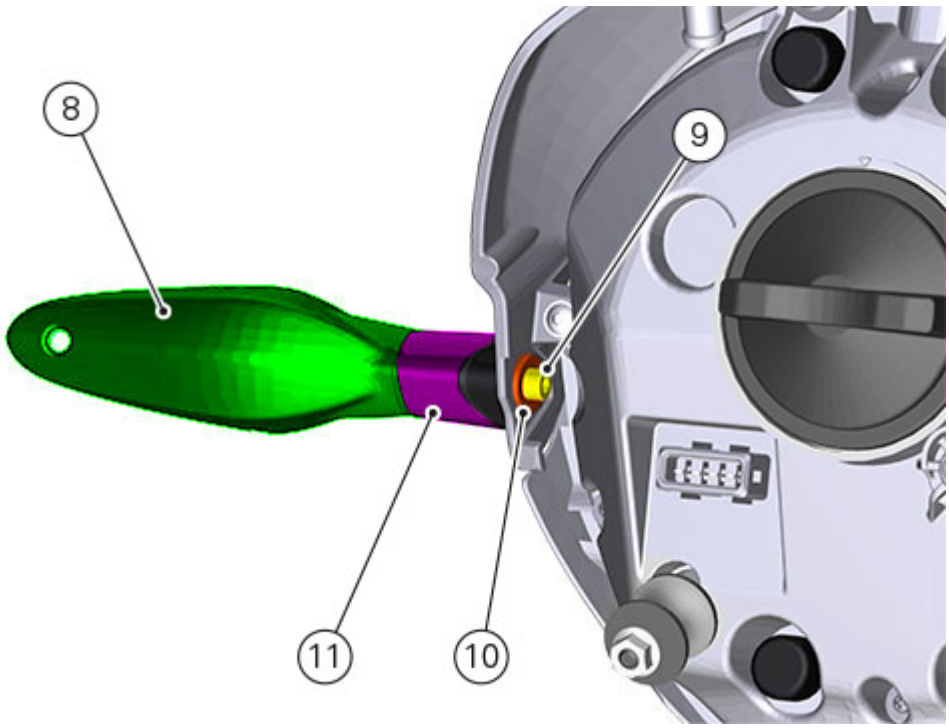

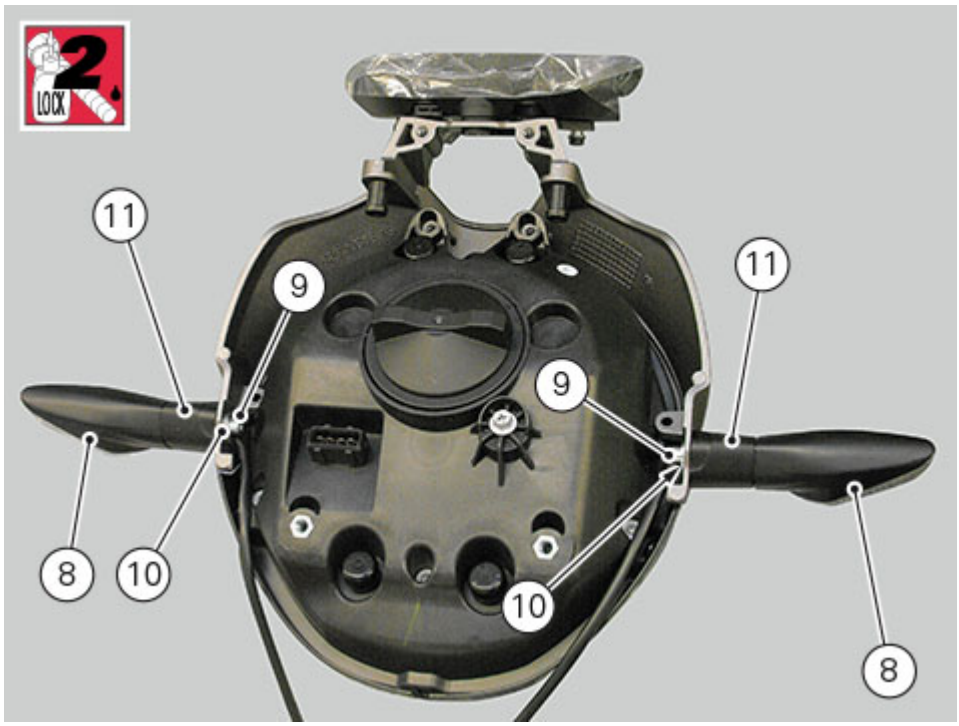

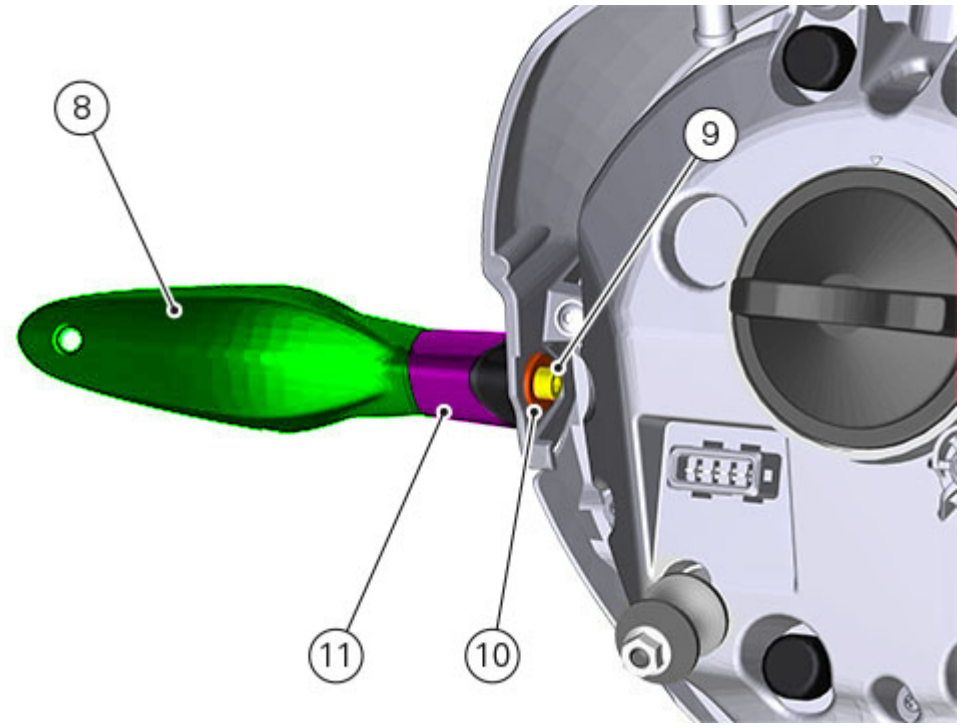

If previously removed, refit the headlight.

Refitting the headlight
Fit the headlight (5) inside the support cover (12), and secure it in place by tightening screws (13) to a torque of 8 Nm ± 10%.
Position spacers (15) and tighten screws (14) to a torque of 5 Nm ± 10%.

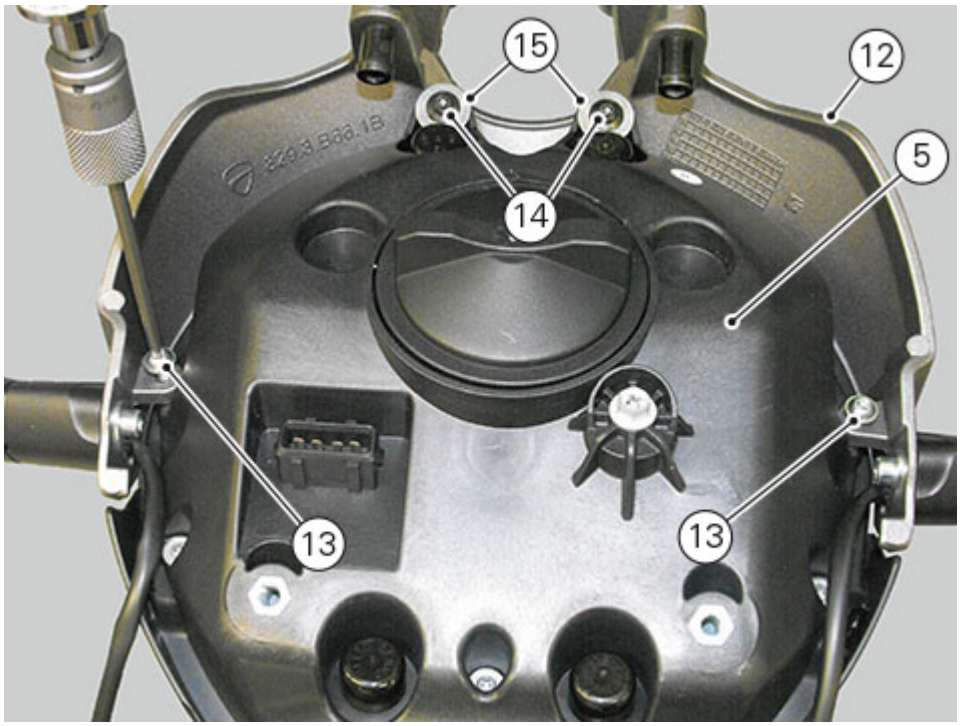

Connect RH (6) and LH (7) turn indicator connectors.
Fit connectors inside the rubber support (19), as specified.

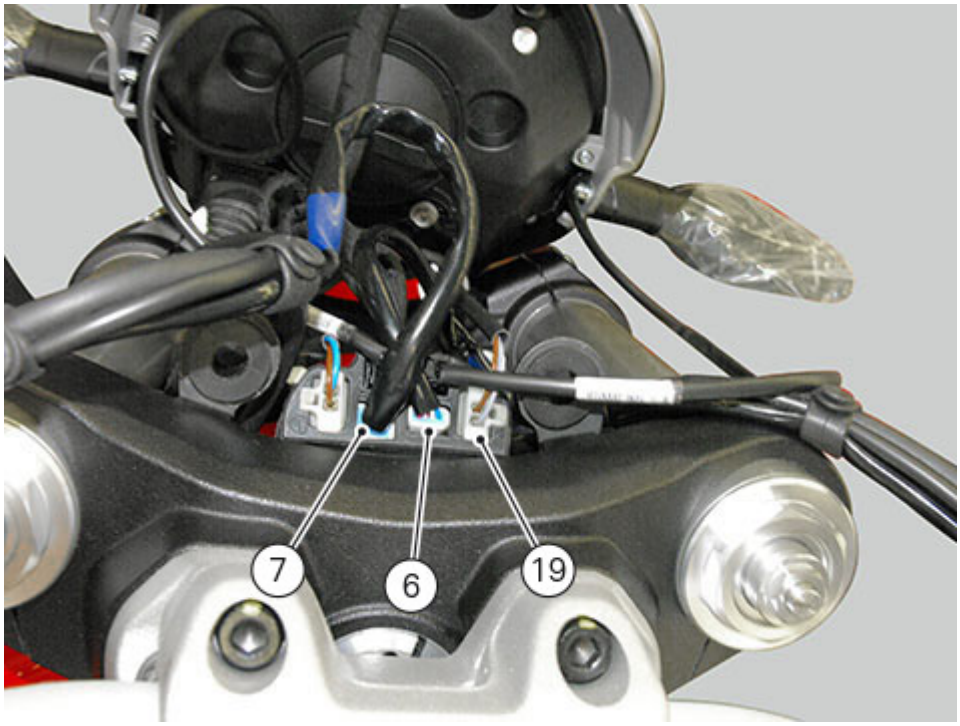

Connect the headlight connector (5).
Fit the front light assembly (4) to vehicle, securing it in place with pins (A).
Slide wirings inside cable rings (6), as specified.

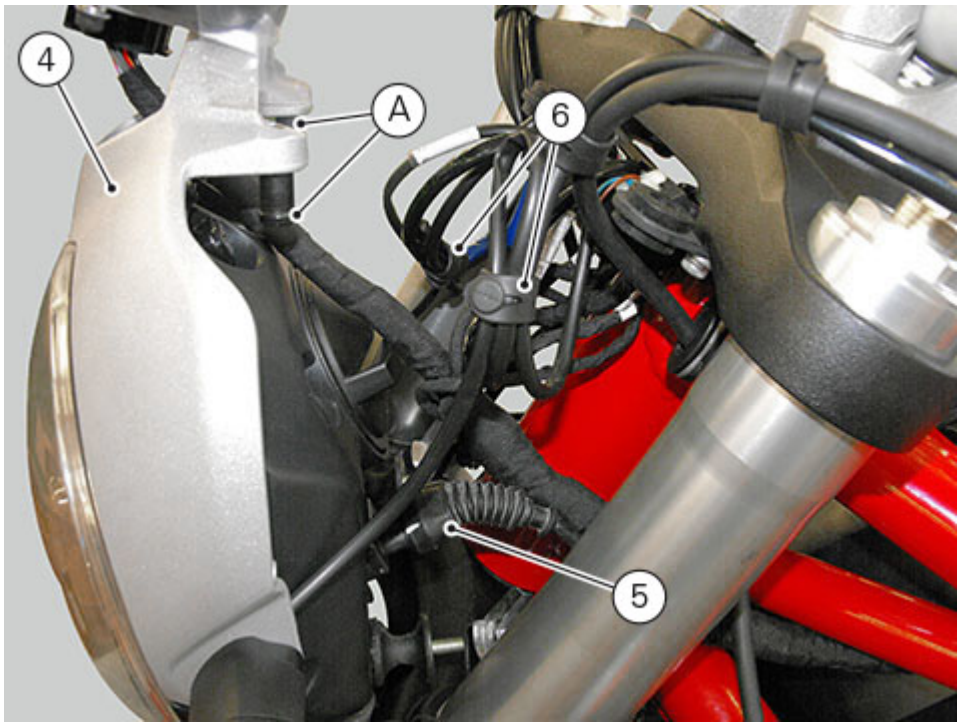

Connect temperature sensor (3), and secure it to vehicle (on RH side) using the special bracket (2). Tighten nuts (1) to a torque of 8 Nm ± 10%.

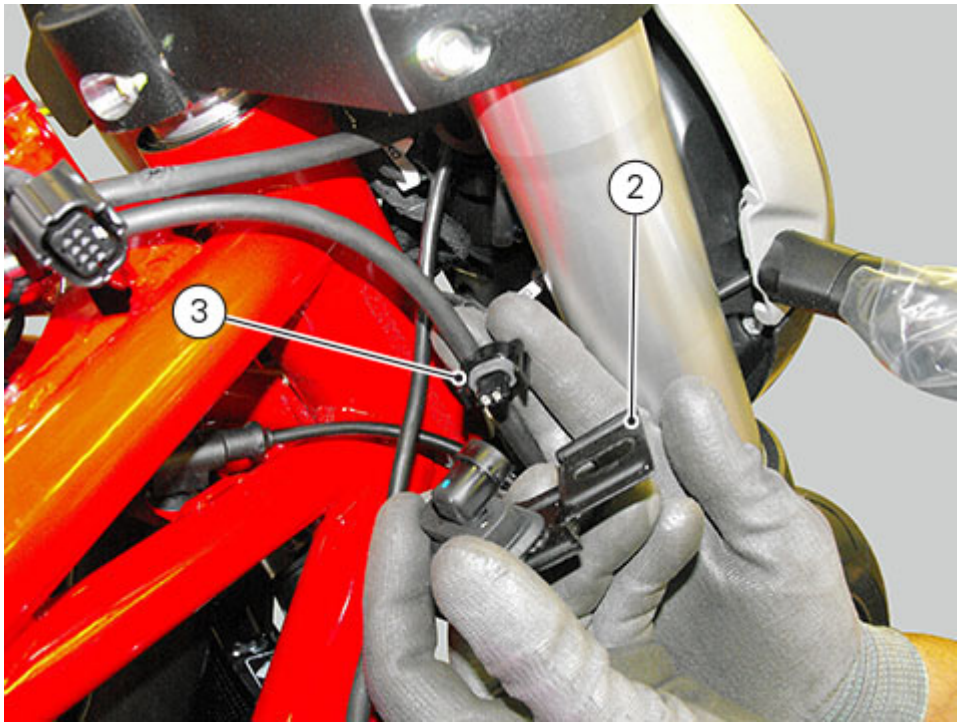

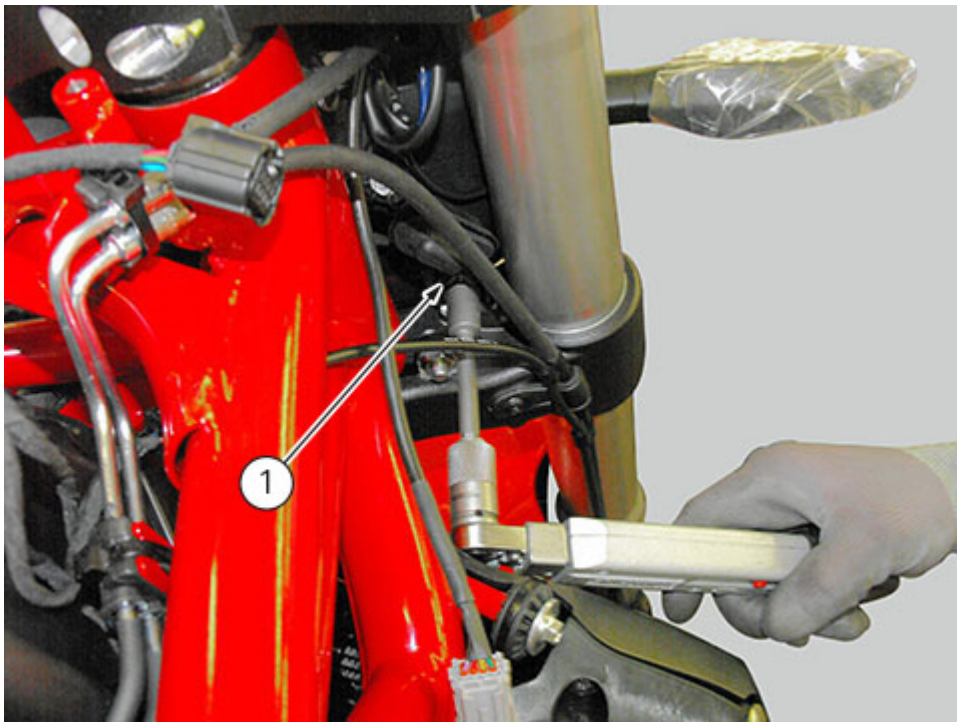

Working on vehicle left-hand side, tighten nut (1) to a torque of 8 Nm ± 10%.

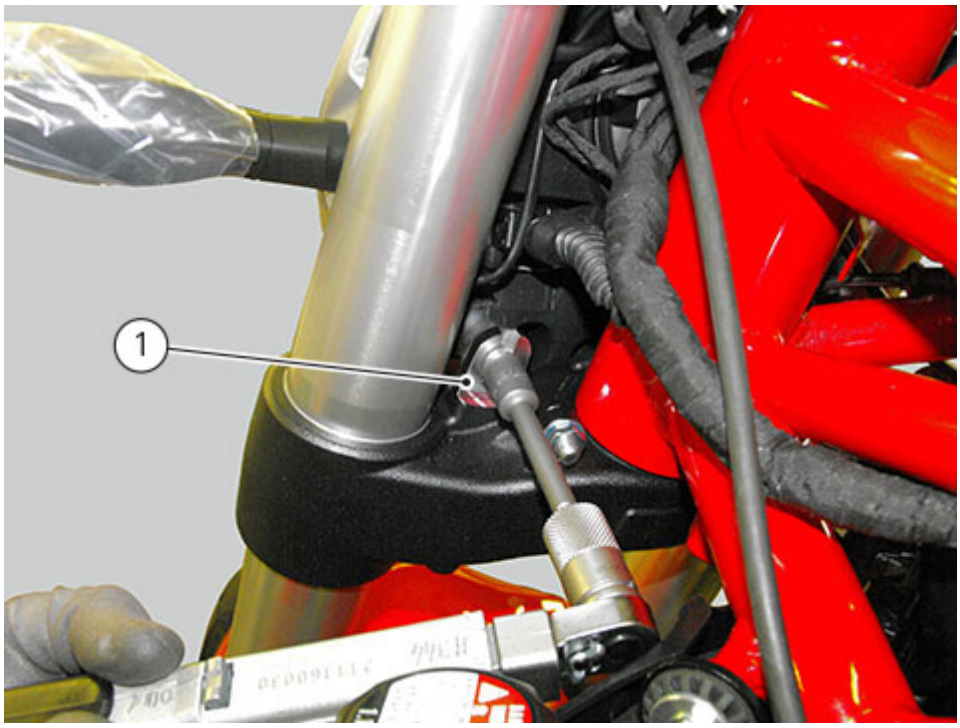

Refit the instrument panel (Refitting the instrument panel assembly).

Refitting the rear subframe

For refitting the rear subframe, follow the procedure described in "Removing the rear subframe" in reverse order.

If removed, smear the vibration damping pads with the indicated product, before fitting them on the vehicle.

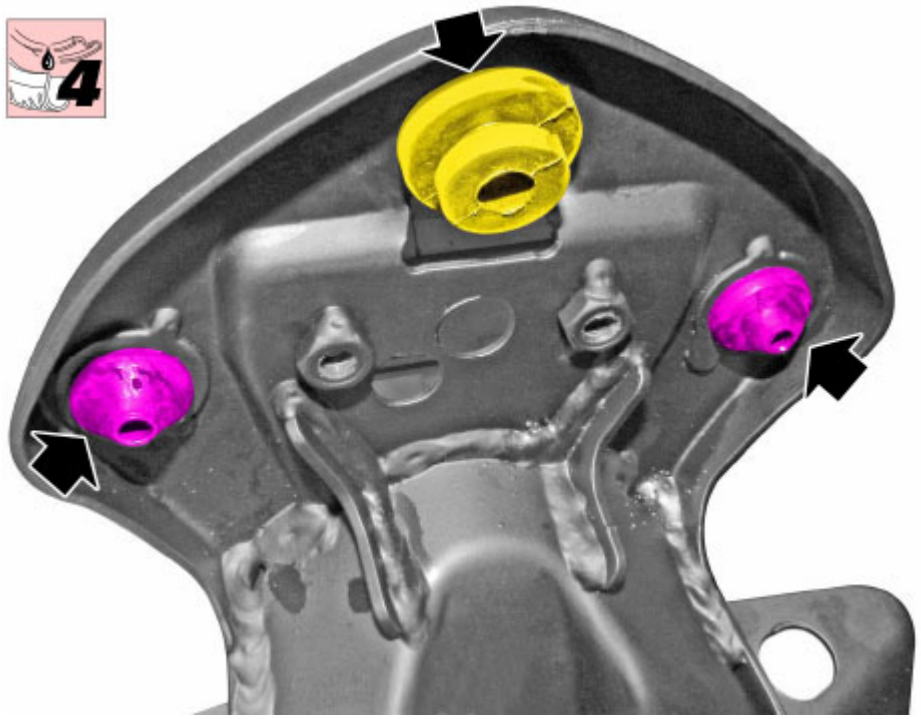

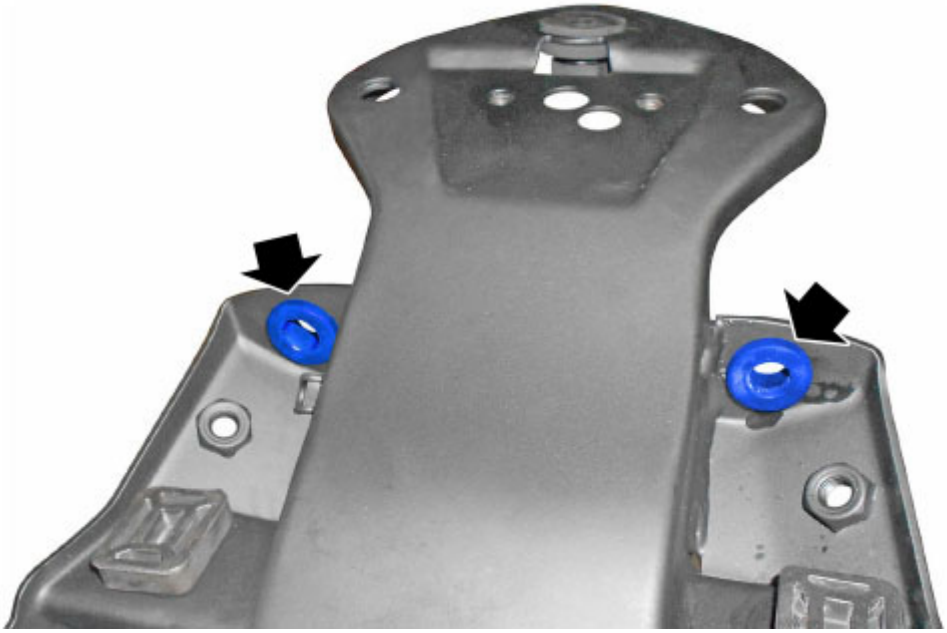

Refit the tail light (Refitting the tail light).
Refit the number plate holder (Refitting the number plate holder).
Refit the seat bottom cover (Refitting the seat bottom cover).
Connect the seat release mechanism (Refitting the seat release mechanism).
Refit the seat (Refitting the seat).

Refitting the structural parts and frame

If previously removed, refit frame and rear subframe components, as described.

FRAME

Make sure that the two outer rings (1) in the steering tube (2) are fitted.

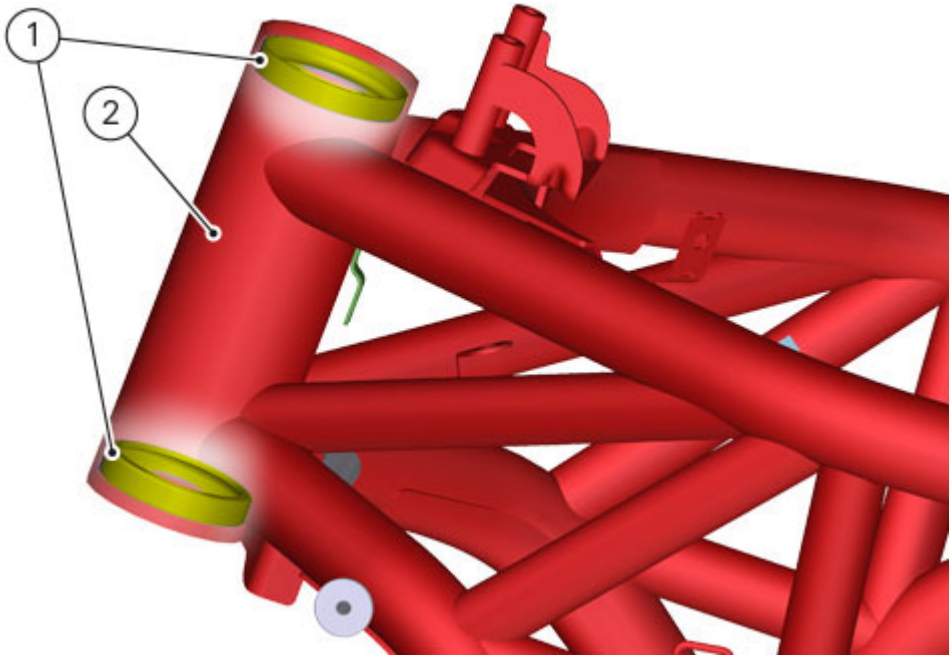

Make sure that the vibration damping rings (3), the clips (4) and the hose clips (5) are fitted on the frame (6). Check for the proper positioning of side body panel vibration dampers (7).

Refit steering tube protection (13), positioning it inside its seat with the relevant spacers (12), and securing it to frame with two rivets (11).

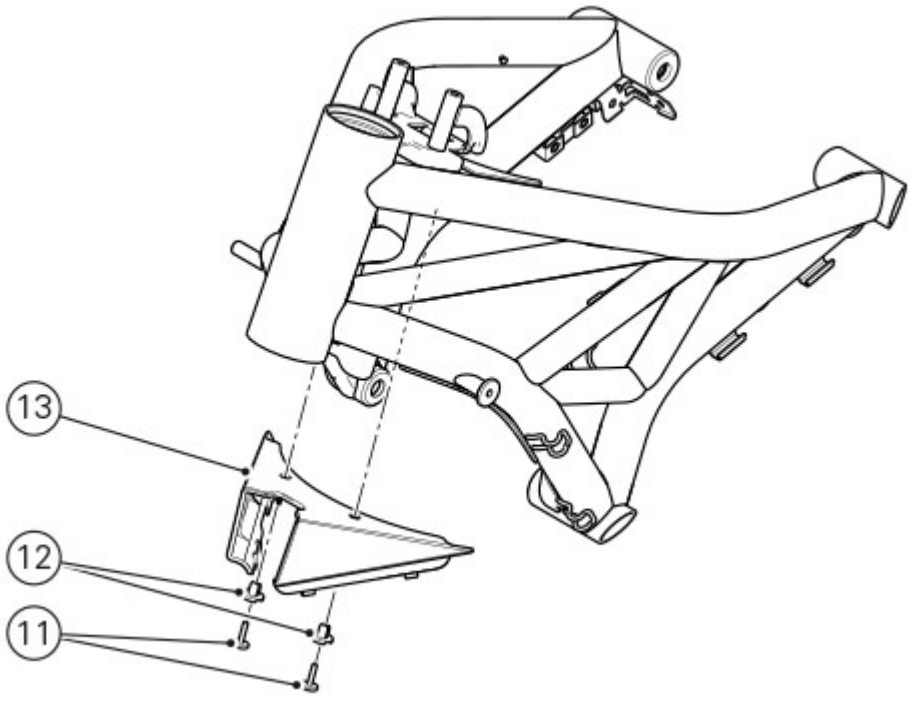

Fit hose clips (10) to frame.

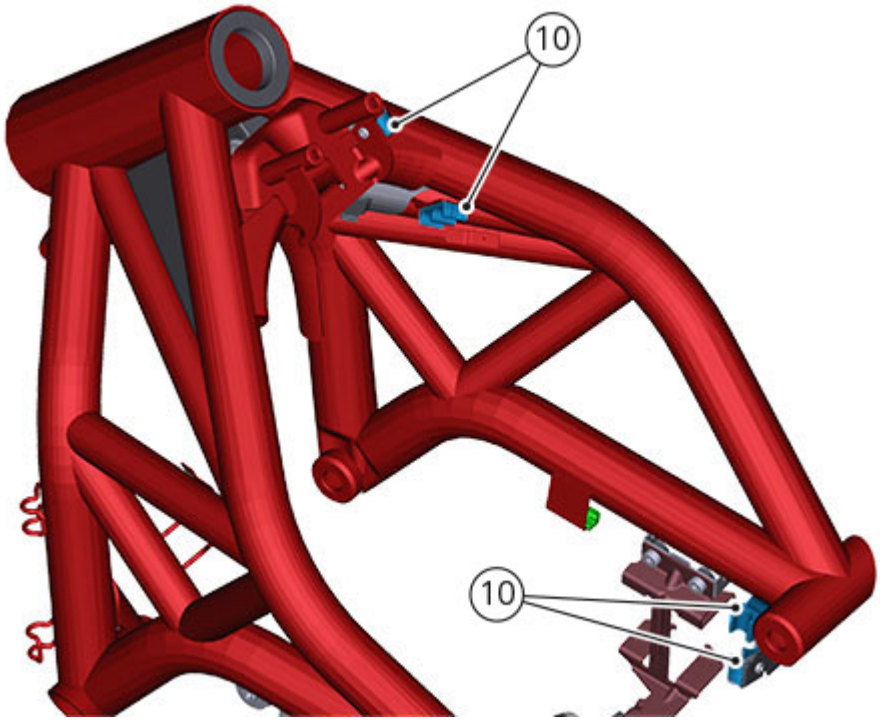

Fit ABS support bracket (9), and secure it to frame by tightening the two screws (8).

Fit vibration damping pads (5), washers (4) and coil support bracket (6).
Secure bracket (6) in place by tightening screws (2) with nuts (3) on frame inner side, to a torque of 6Nm ±10%
Working on vehicle outer side, fit the four vibration dampers (7) into their seats.

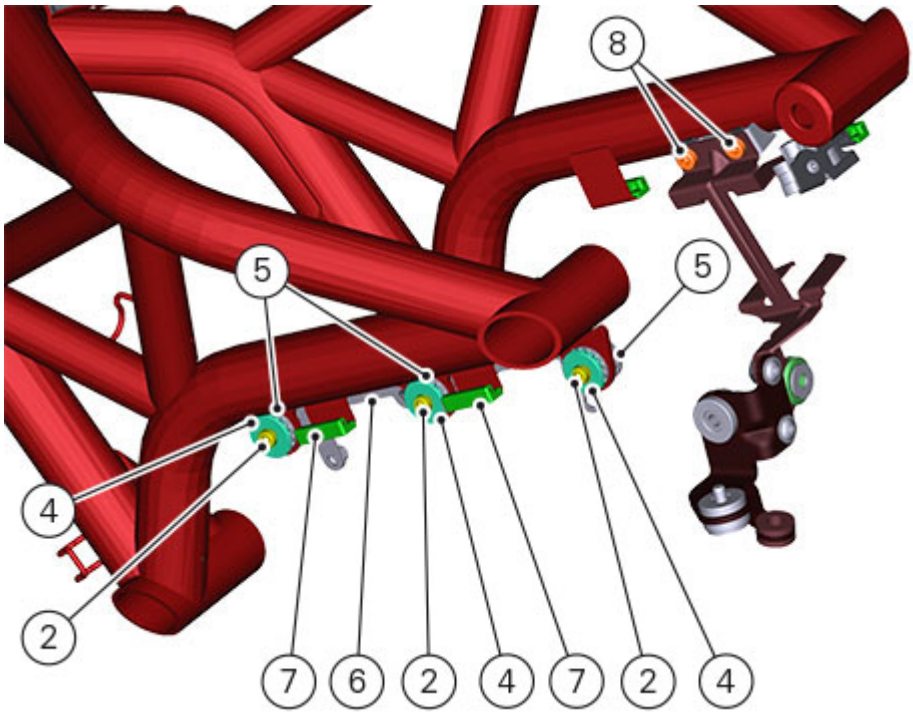

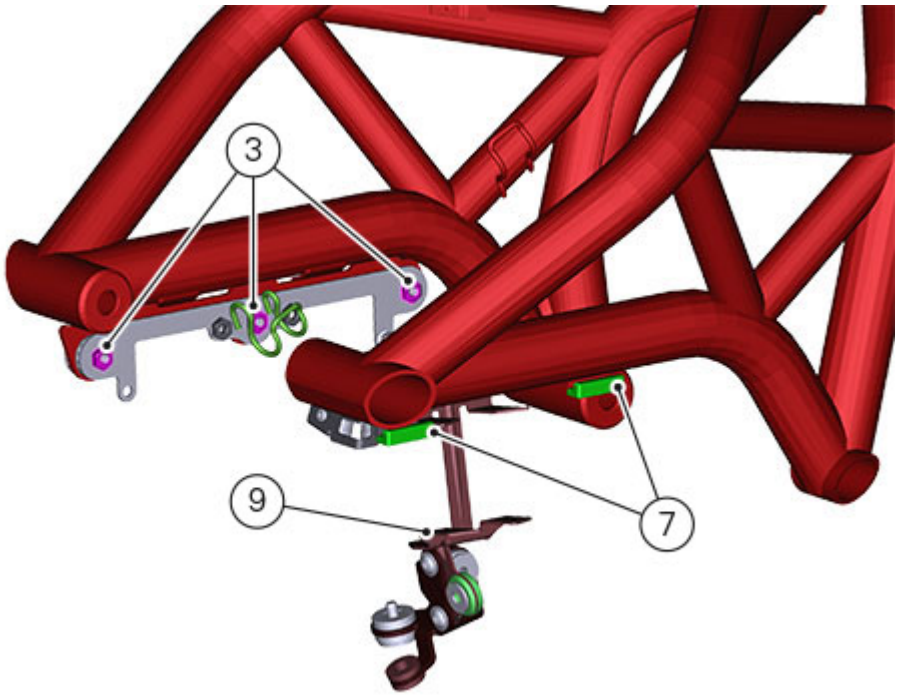

Apply the specified binding and isolating product all around plug (1) groove, by filling it.
Working on both sides of frame and paying special attention to the positioning direction (A) (arrow up), insert plugs (1) inside frame, making sure to drive surface (B) fully home.

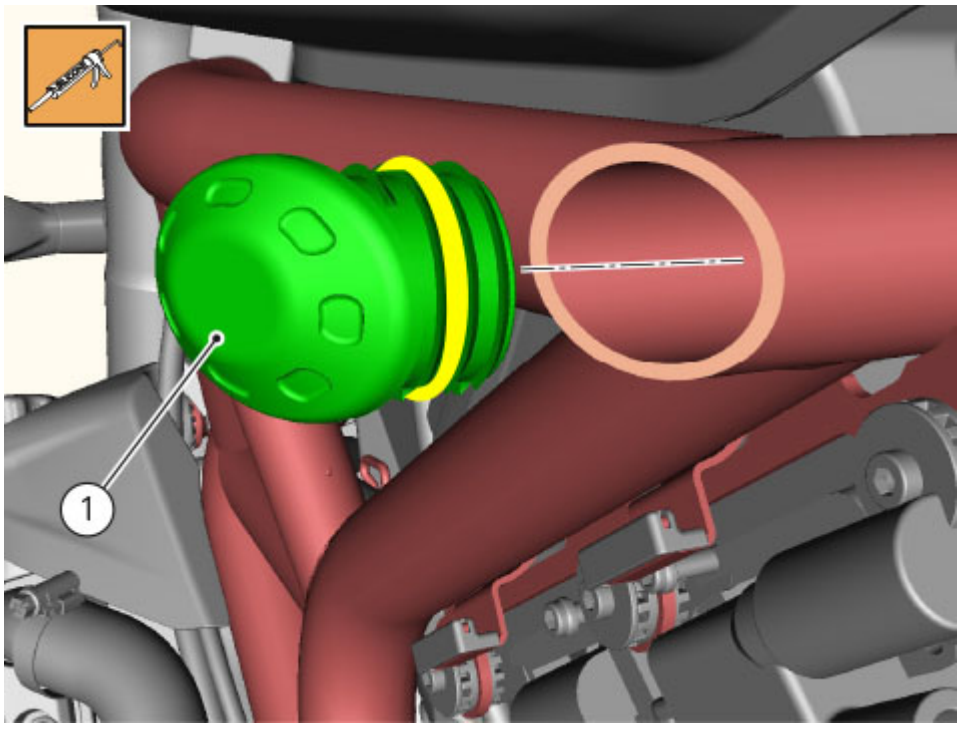

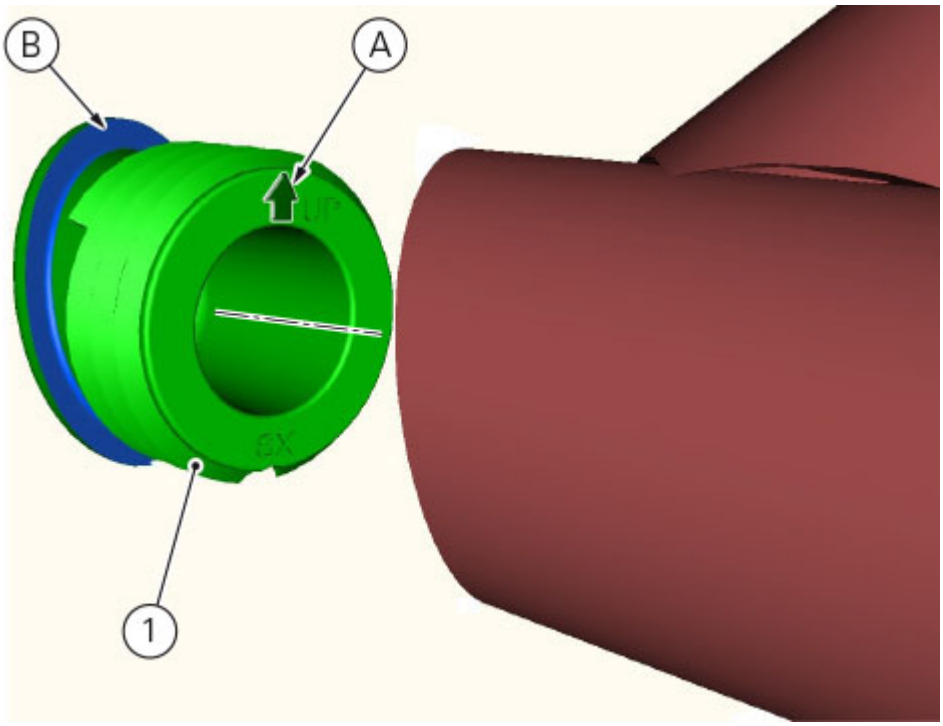

REAR SUBFRAME

Fit the three cable rings (14) and the two seat blocks (15).

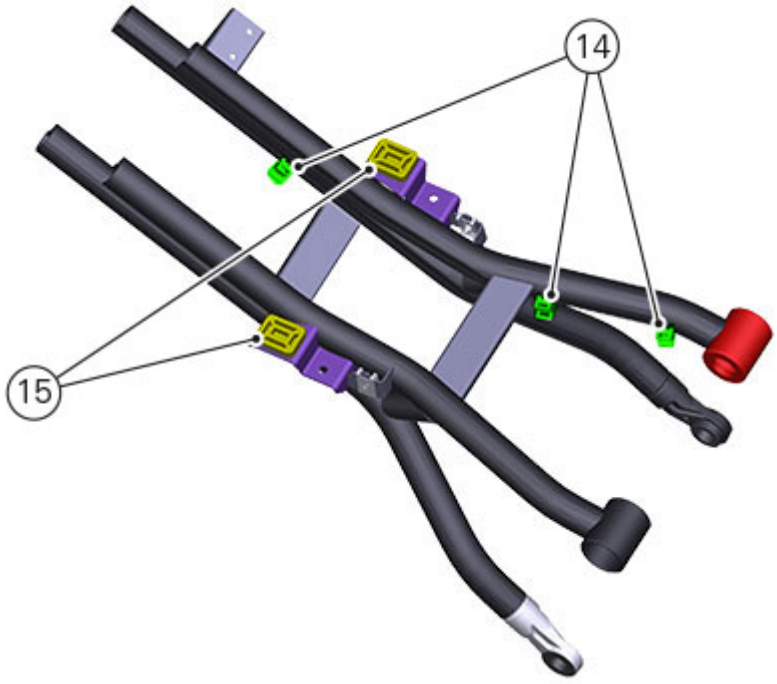

REFITTING THE COMPONENTS

Once frame and rear subframe preliminary operations have been completed, refit all removed components, following the procedure described in "Removing structural components and frame" in reverse order.

Checking the frame

FRAME

Important

Damaged frames must be changed, not repaired. Any work carried out on the frame can give rise to potential danger, infringing the requirements of EC directives concerning manufacturer's liability and general product safety.

Frame overall dimensions (mm)

A= 153.80 mm
B= 132.00 mm
C= 236.50 mm
D= 51.90 mm
E= 26.5° (+0°; +0.3°)

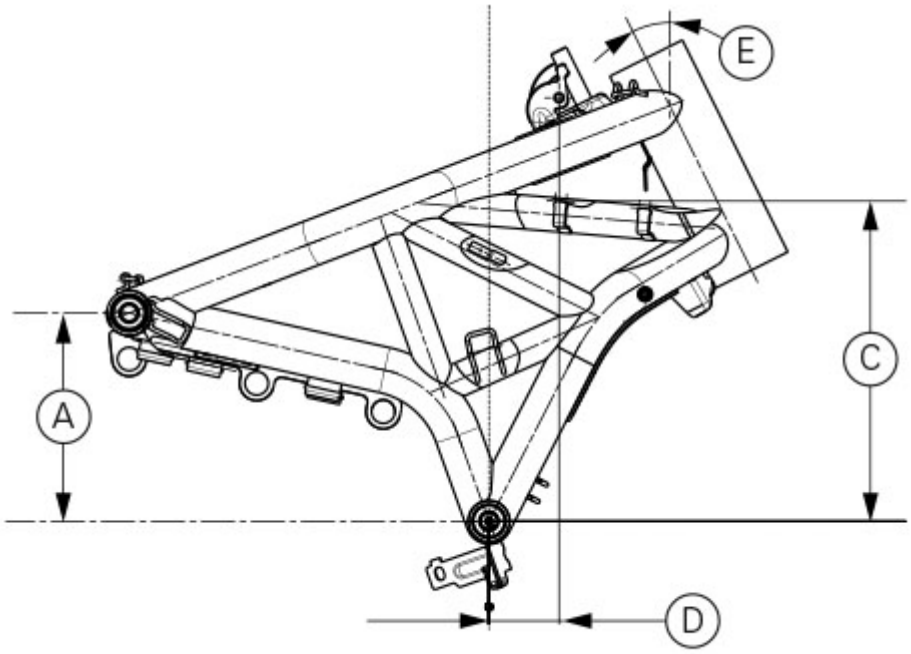

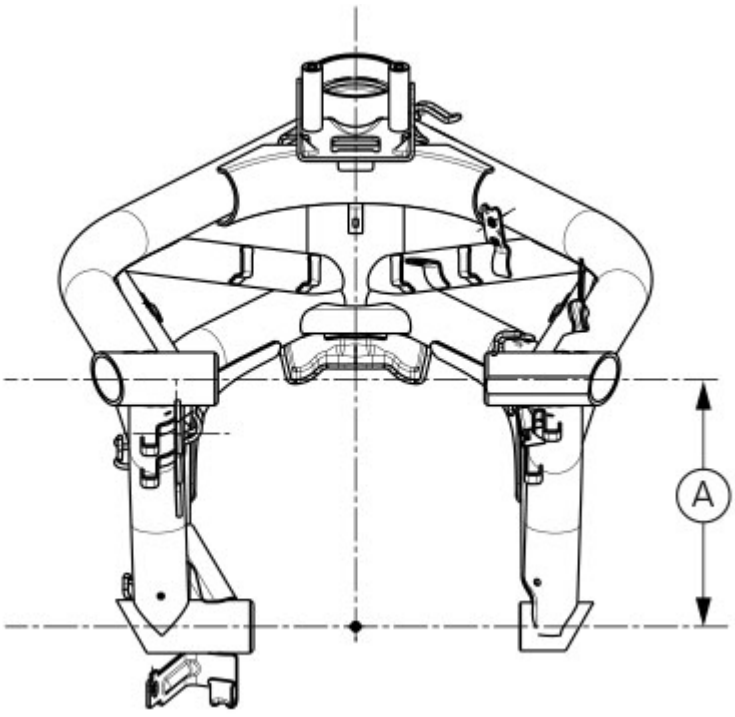

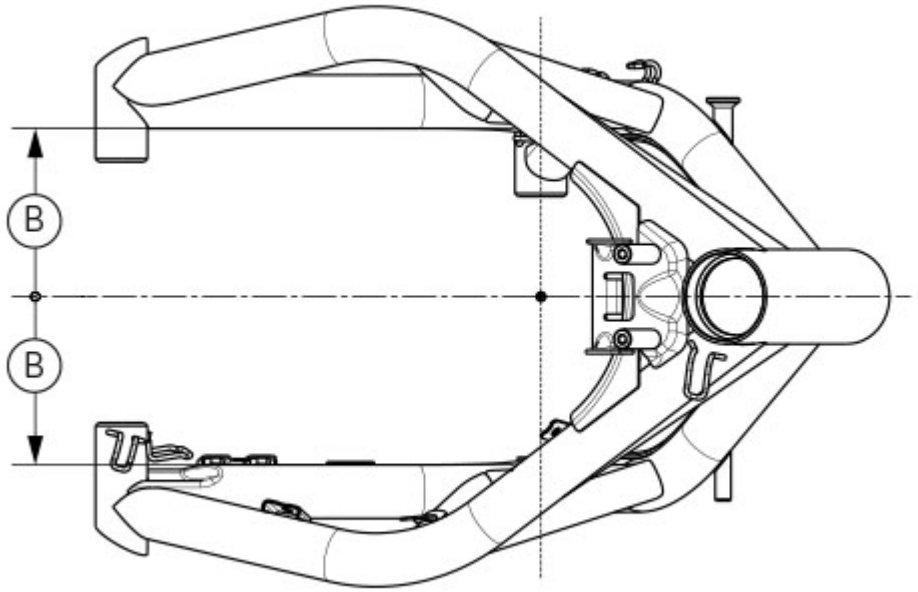

REAR SUBFRAME

Important

Damaged frames must be changed, not repaired. Any work carried out on the frame can give rise to potential danger, infringing the requirements of EC directives concerning manufacturer's liability and general product safety.

Frame overall dimensions (mm)

F= 58.1 mm
G= 98.8 mm
H= 194.2 mm
I= 588.7 mm
J= 387.9
K= 332.2 mm
L= 130.9 mm
M= 91.5 mm
N= 130.1 mm
O= 62.5 mm

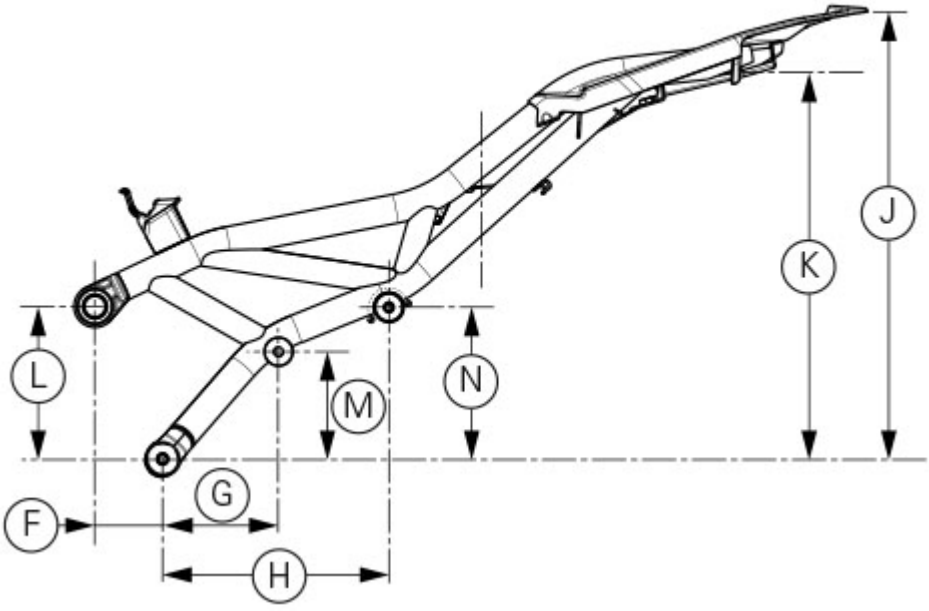

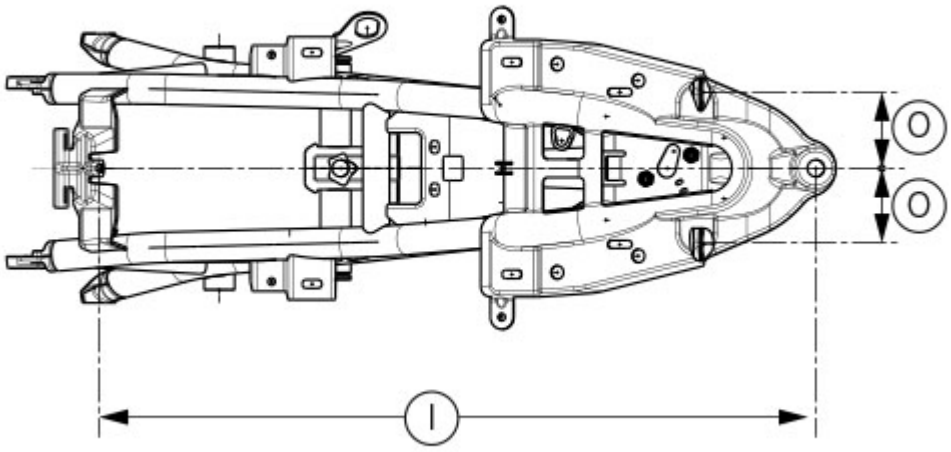
O
O
I

Removing the rear subframe

Remove the seat (Removing the seat).
Remove the rear side body panels (Removing the rear side body panels).
Remove the rear grab handles (Removing the rear grab handles).
Disconnect the seat release mechanism (Removing the seat release mechanism).
Remove the seat bottom cover (Removing the seat bottom cover).
Remove the tail light (Removing the tail light).

Working on both sides, loosen the two upper special screws (1).



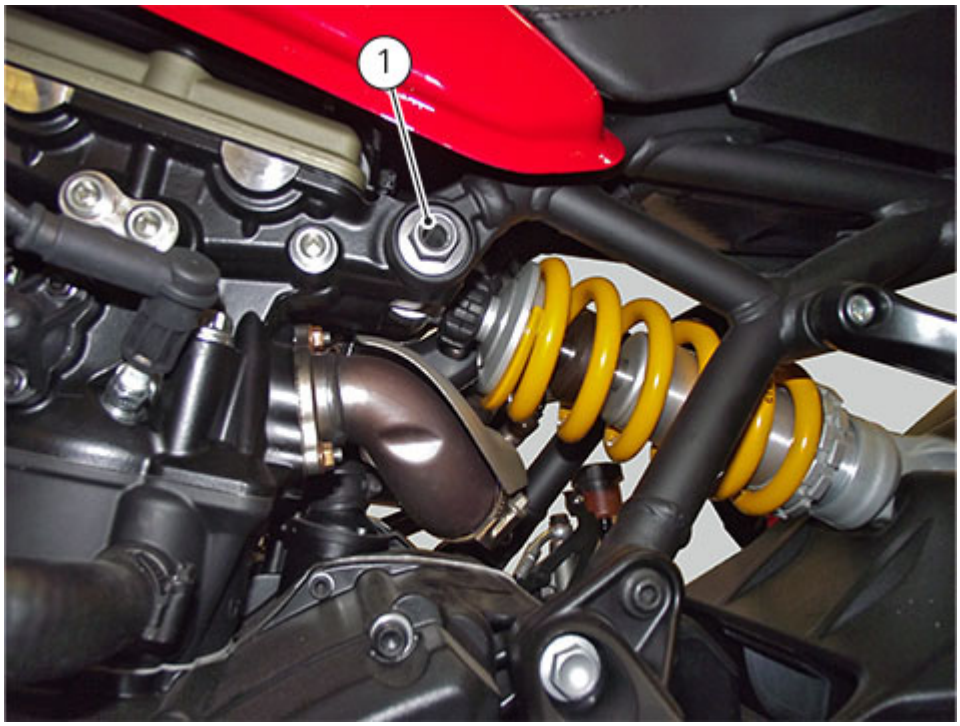

Working on both sides, loosen retaining screw (2), collecting rear nut.

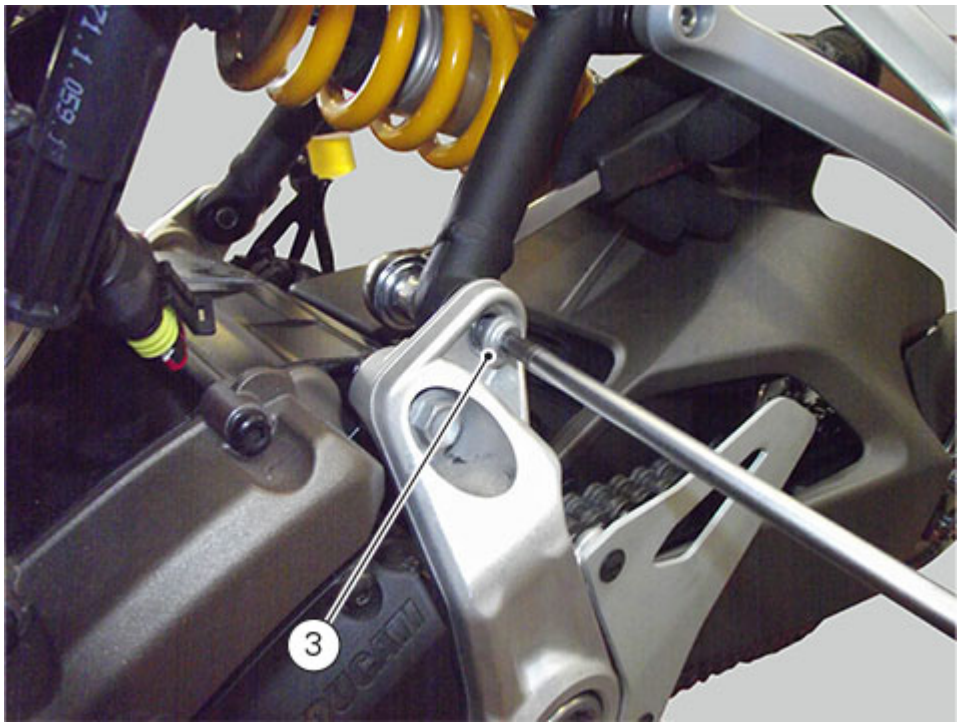

Remove the subframe (Removing the rear subframe).
If necessary, remove the number plate holder (Removing the number plate holder).
Remove the tail light (Removing the tail light).

Removing the light assembly

Remove the instrument panel (Removing the instrument panel assembly).
Loosen nuts (1) of light assembly lower fasteners on bottom yoke.

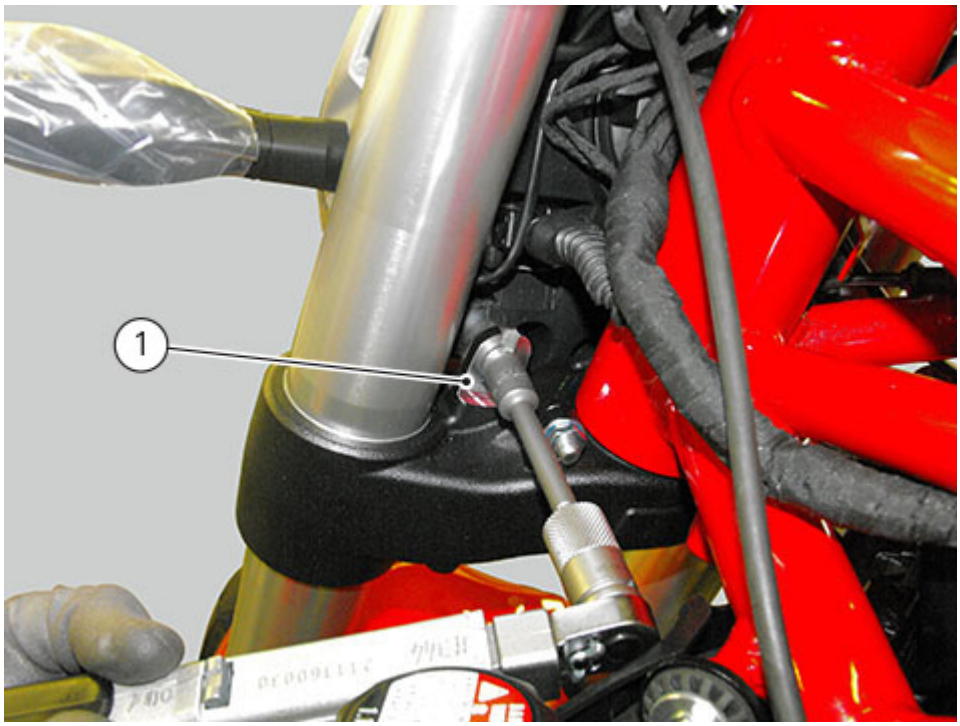

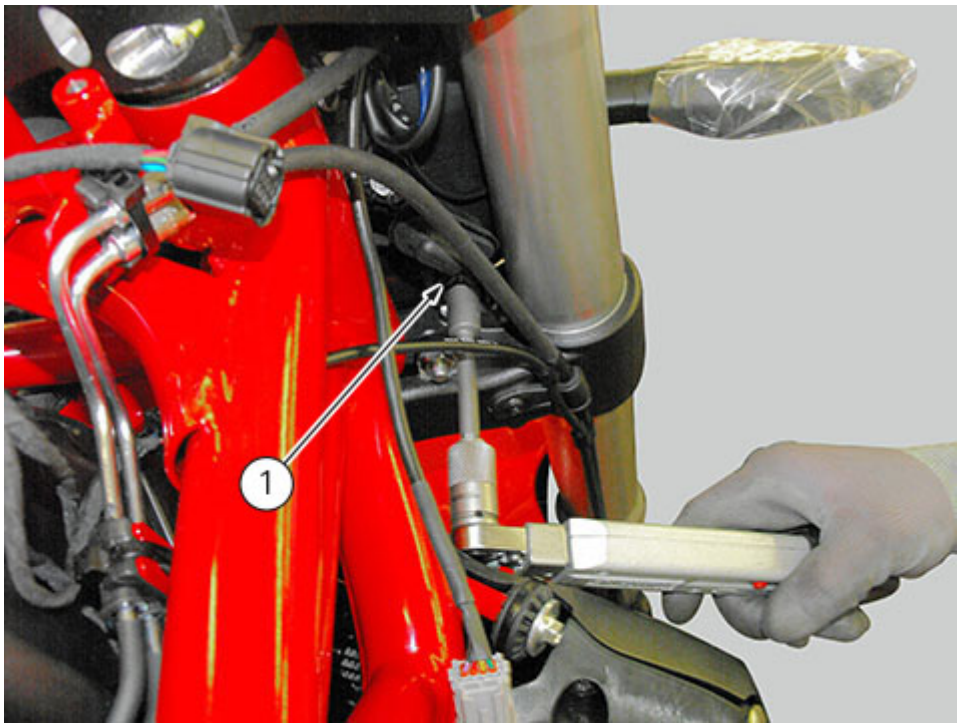

Collect temperature sensor connector (3) bracket (2) on the RH side, which is secured in place by RH nut (1) you have just removed.
Disconnect temperature sensor connector (3).

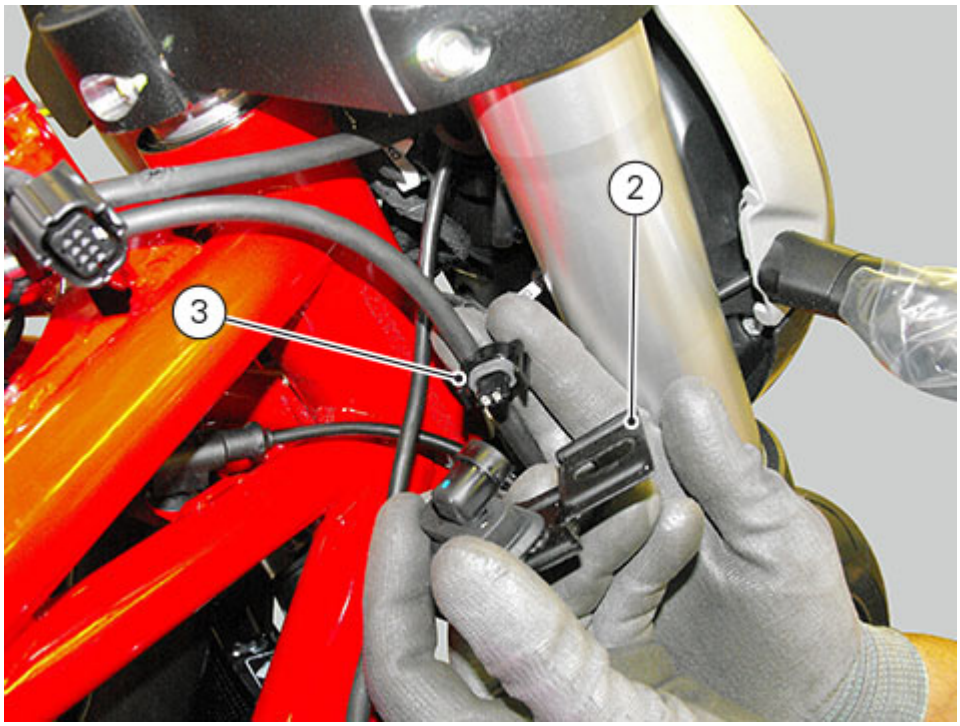

Slide out light assembly (4) pins (A) pulling it up and duly supporting the light assembly, then disconnect headlight connector (5).
Release wirings from cable rings (6).

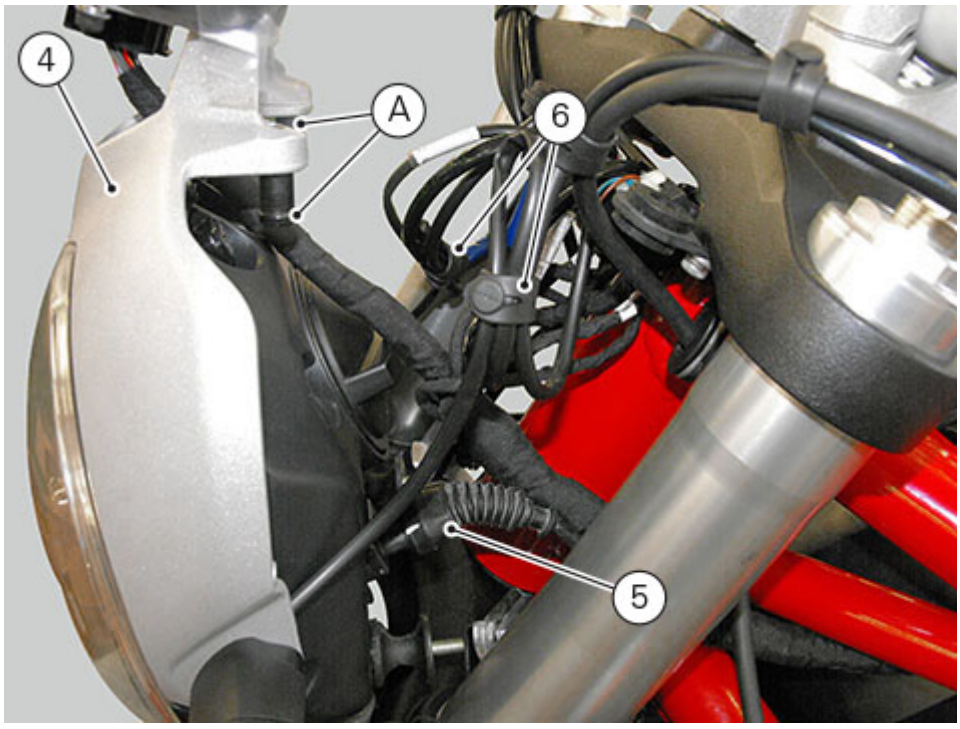

Slide out RH (6) and LH (7) turn indicator supports, then disconnect them.

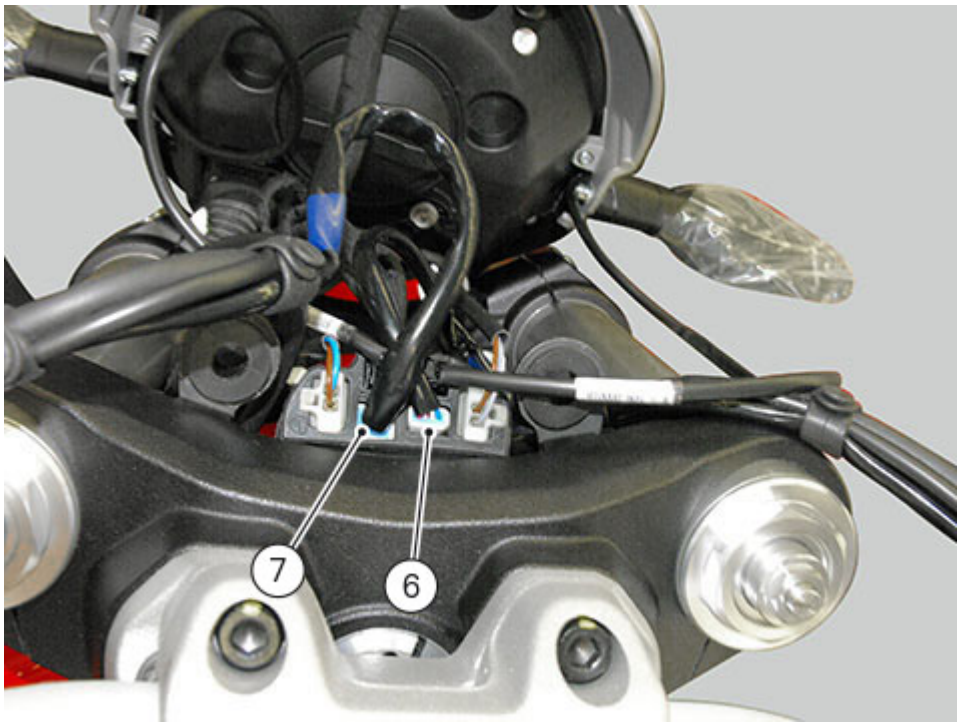

Remove the light assembly.

Removing the turn indicators (NOT FOR USA VERSION)
To remove turn indicators (8), loosen screws (9) and collect plates (10).
Slide out turn indicator (8) from the outside together with wiring and spacer (11).

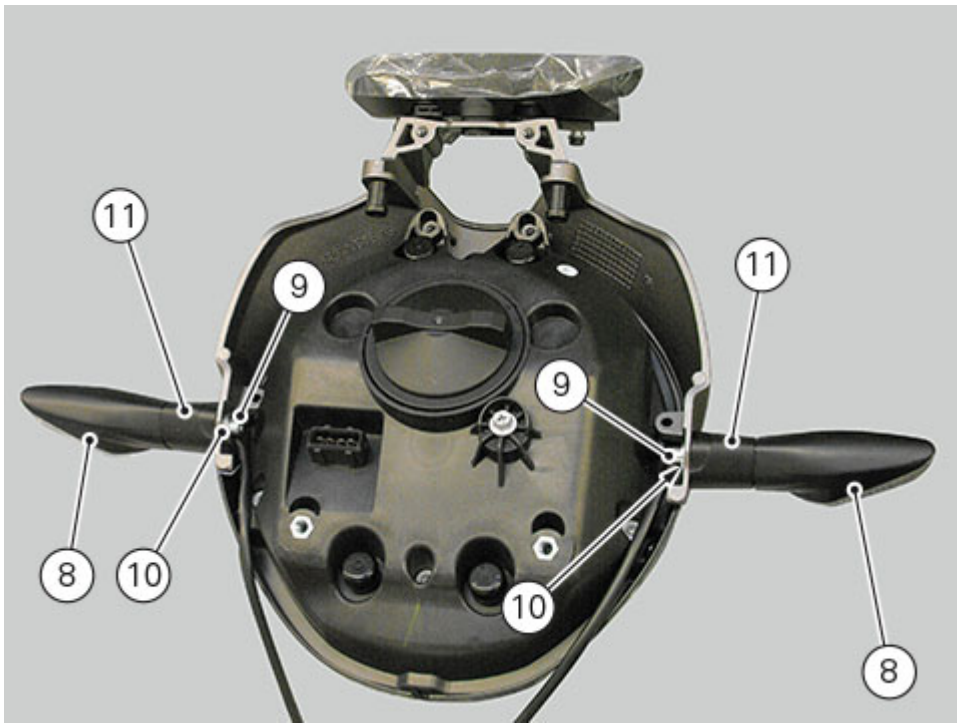

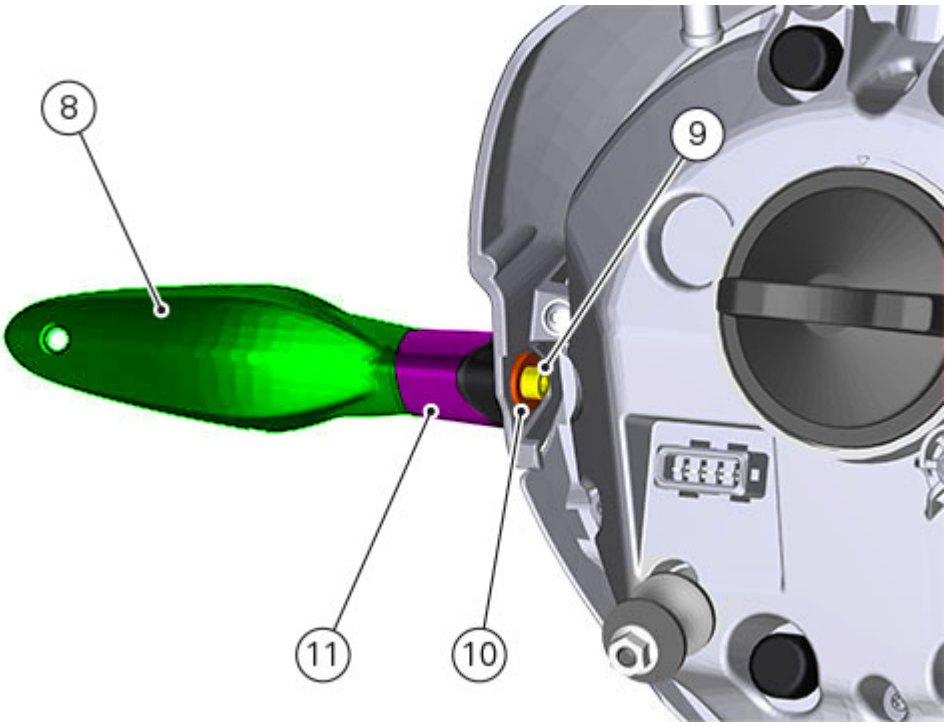

Removing the turn indicators (USA VERSION, ONLY)
Disconnect turn indicator connectors (6) and (7) (as specified in "").
Working in the same way for both turn indicators, loosen screw (16).

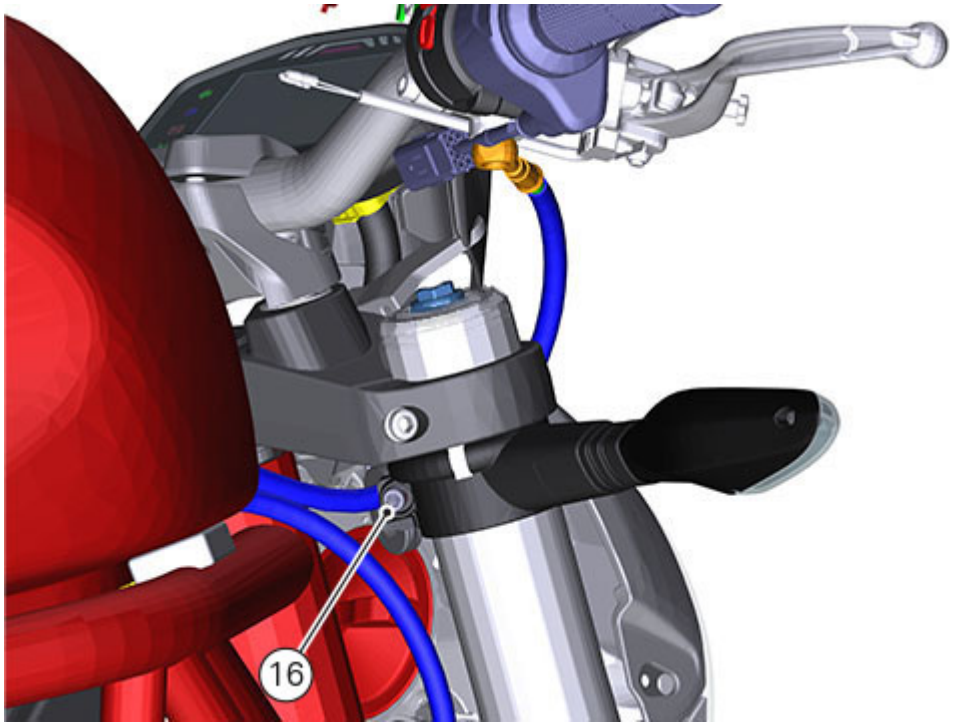

Release fork legs and slide out turn indicators (Removing the front fork).
If necessary, disassemble turn indicators by loosening screws (17) and (18).

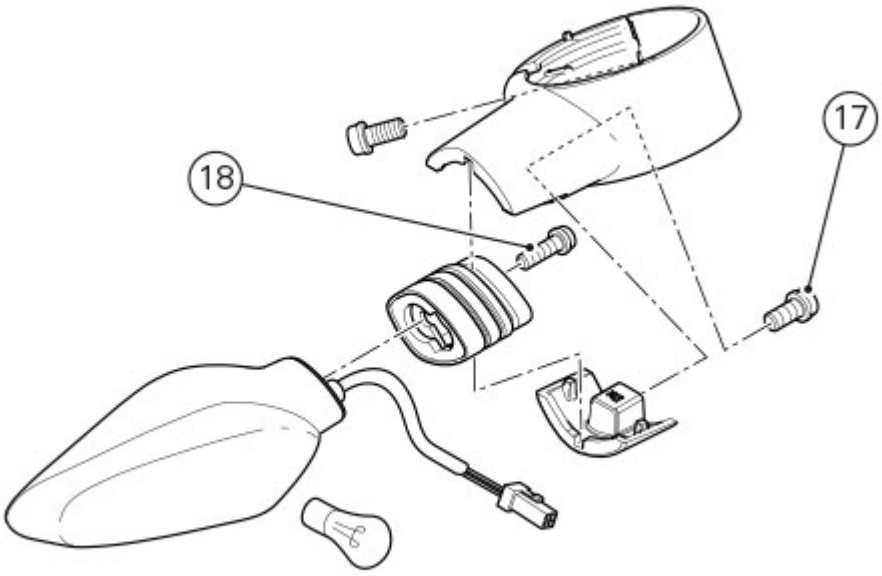

Removing the headlight

To release headlight (5) from support cover (12), loosen screws (13).
Loosen screws (14) and collect spacers (15).

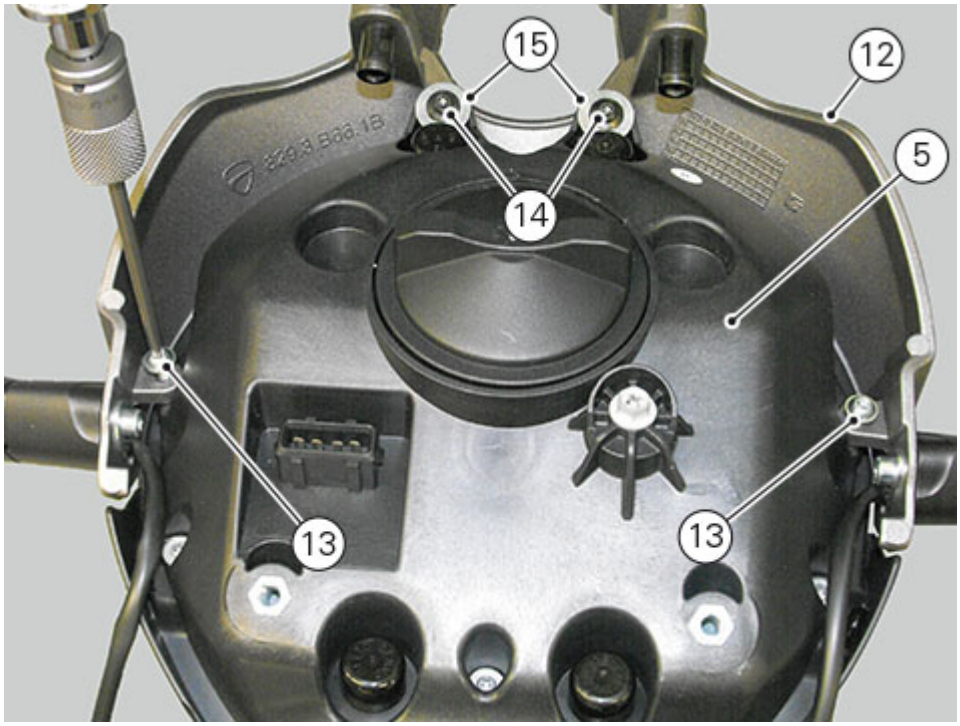

Removing structural components and frame

Before carrying out dimensional checks on frame and rear subframe, remove all the fitted superstructures, referring to the removal procedures outlined in the relevant sections of this manual.

Working in the same way on both sides, remove plugs (1) from frame.

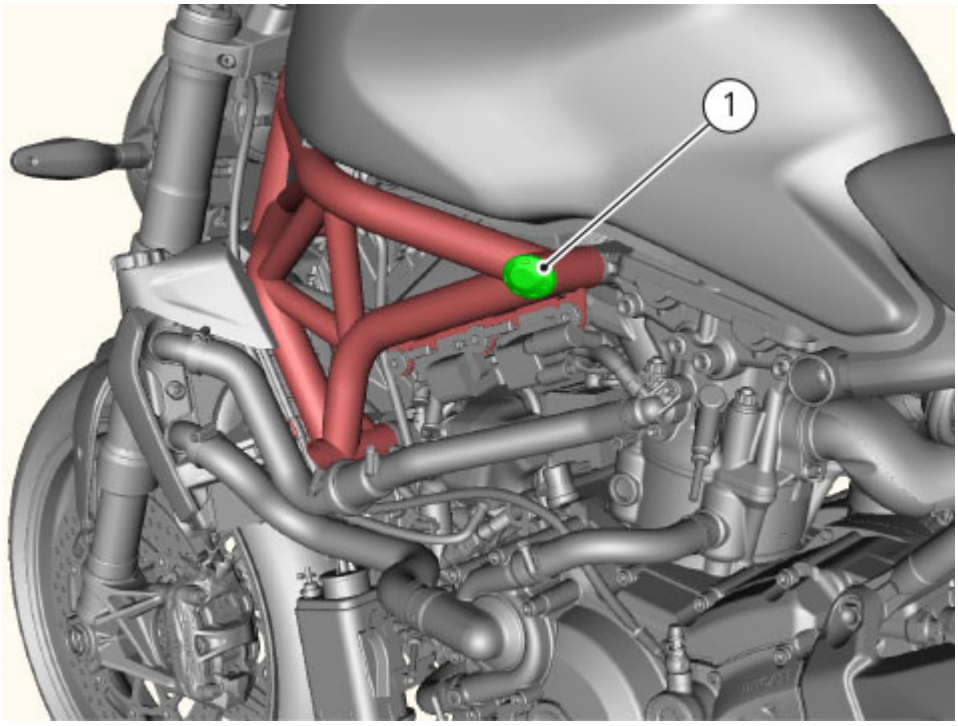

Hereinafter is a list of the components to be removed, in a logical sequence.
Remove the seat (Removing the seat).
Remove the instrument panel (Removing the instrument panel assembly).
Remove the fuel tank (Removing the fuel tank).
Remove the supply system and the injectors from the intake manifolds (Removing the airbox and throttle body).
Remove the airbox, the throttle body, the blow by and the oil breather pipe (Removing the airbox and throttle body).
Remove the throttle control cable (Removing the throttle control).
Remove the secondary air system pipes and valve (Removing the secondary air system).
Disconnect spark plug caps and remove the exhaust assembly (Removing the exhaust system).
Release rear shock absorber from engine (Removing the rear shock absorber).
Drain the lubrication system (Changing the engine oil and filter cartridge).
Drain the coolant (Changing the coolant).
Remove the cooling system hoses and unions from the engine block (Removing cooling system hoses and unions).
Remove the water radiator lower retainer from the engine (Removing the water radiator).
Disconnect the starter motor/solenoid starter cable (Removing the starter motor).
Remove the gear shift (Removing the gear shift).
Remove the footpeg holder plates (Removing the footpeg holder plates).
Remove the clutch slave cylinder (Removing the clutch slave cylinder).
Remove the front sprocket (Removing the front sprocket).
Remove the side stand (Removing the side stand).
Remove the canister unit (Removing the canister filter).

Disconnect wiring connectors on the engine block.
Remove the engine block from frame.

To remove frame, remove also:
- the handlebar (Removing the handlebar);
- the front wheel (Removing the front wheel);
- the forks (Removing the front fork).
- the front light assembly (Removing the light assembly)

Then remove the last components from frame and subframe.

FRAME

Loosen the three screws (2) and collect, on frame inner side, the three corresponding nuts (3).
Slide out washers (4), vibration damping pads (5) and remove coil support bracket (6).
Slide out the four rubber blocks (7), working on both vehicle outer sides.
Then loosen screws (8) and remove ABS support bracket (9).

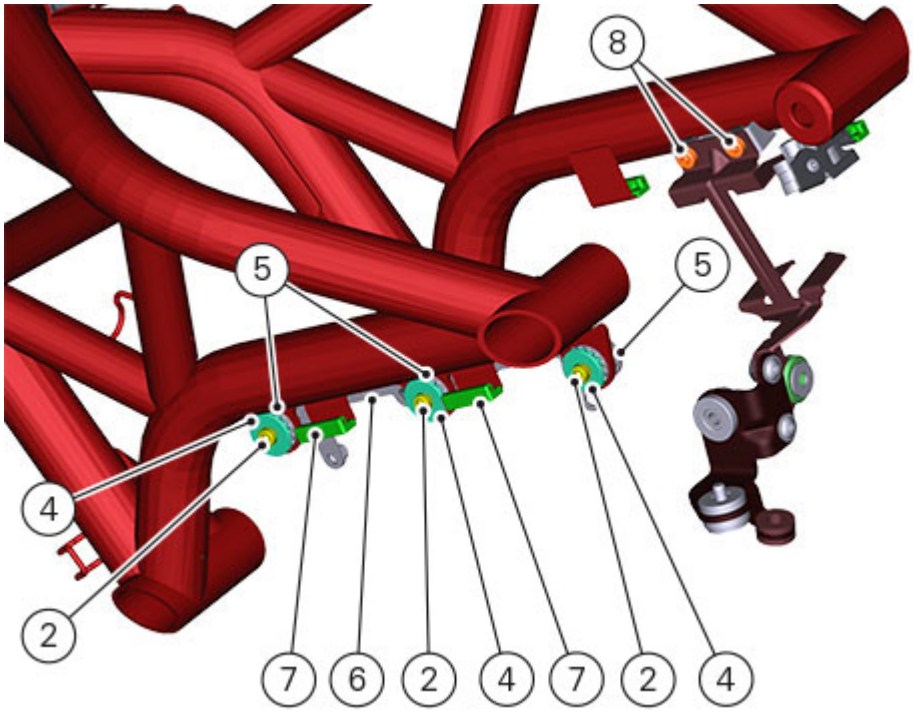

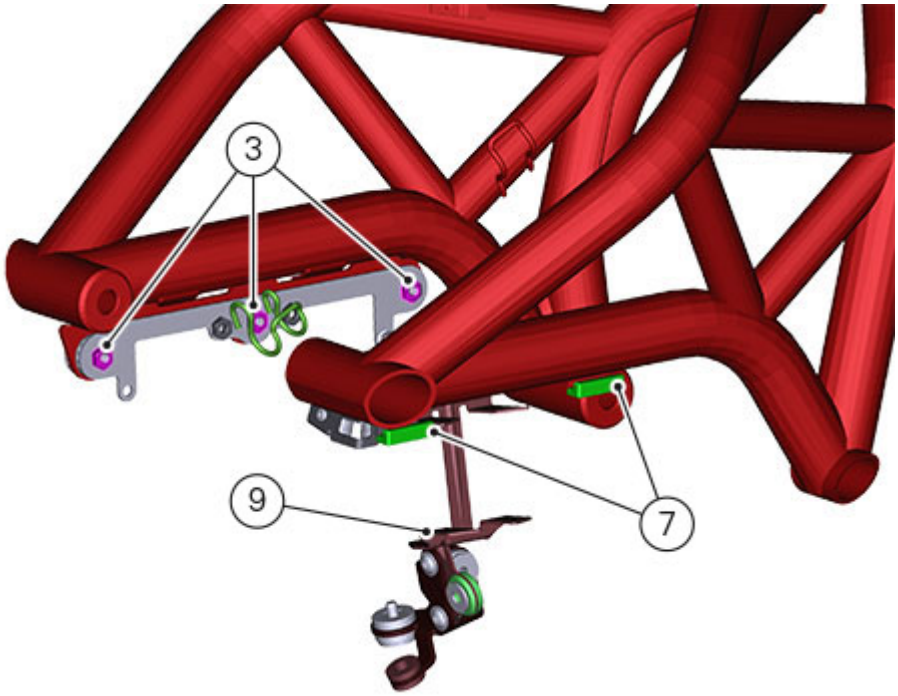

Release frame from cable rings (10).

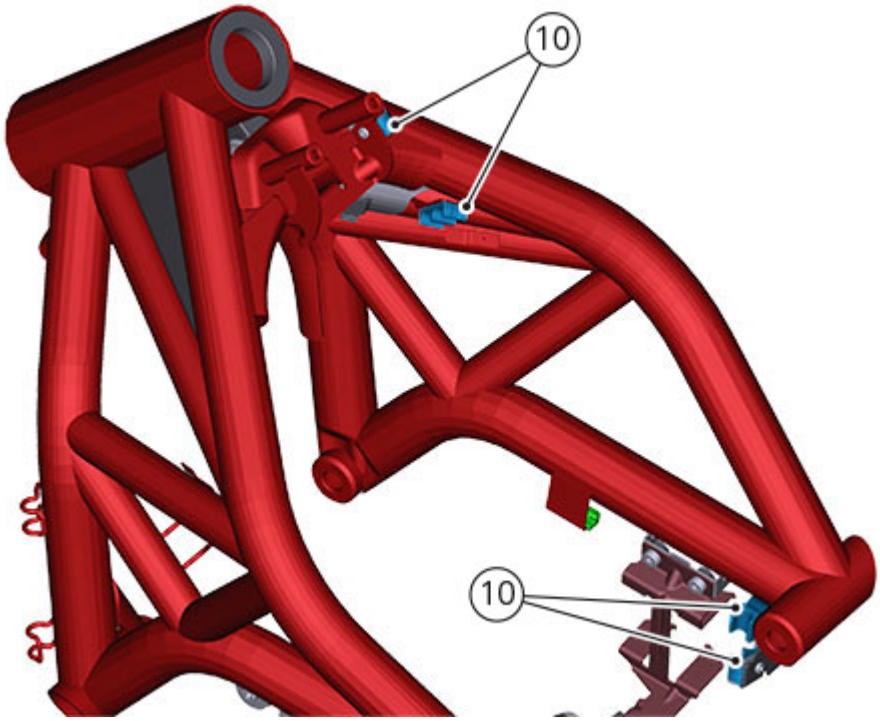

Remove the two rivets (11) and relevant spacers (12), and slide out steering tube protection (13) from the bottom.

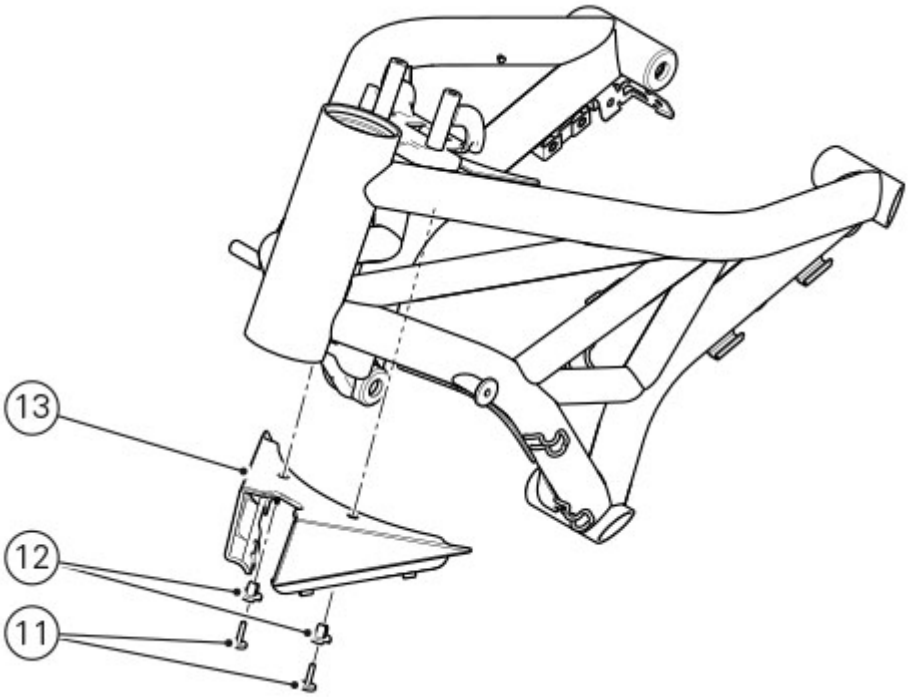

REAR SUBFRAME

If not previously removed, remove tail light (Removing the tail light).
Remove the three cable rings (14) and the two seat blocks (15).

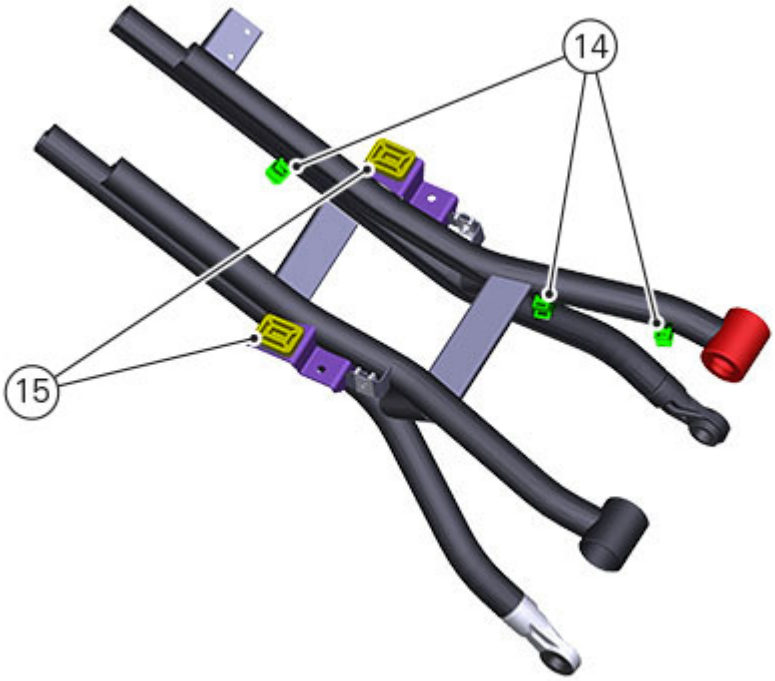
14
15

Refitting the tail light

Fit tail light (6) to subframe, mating light recess (C) with vibration damper (B).



Connect connector (5) and secure wiring in place with tie (4).



Fit washers (2) on rubber elements (3) and tighten screws (1) to a torque of 3Nm ± 10%.

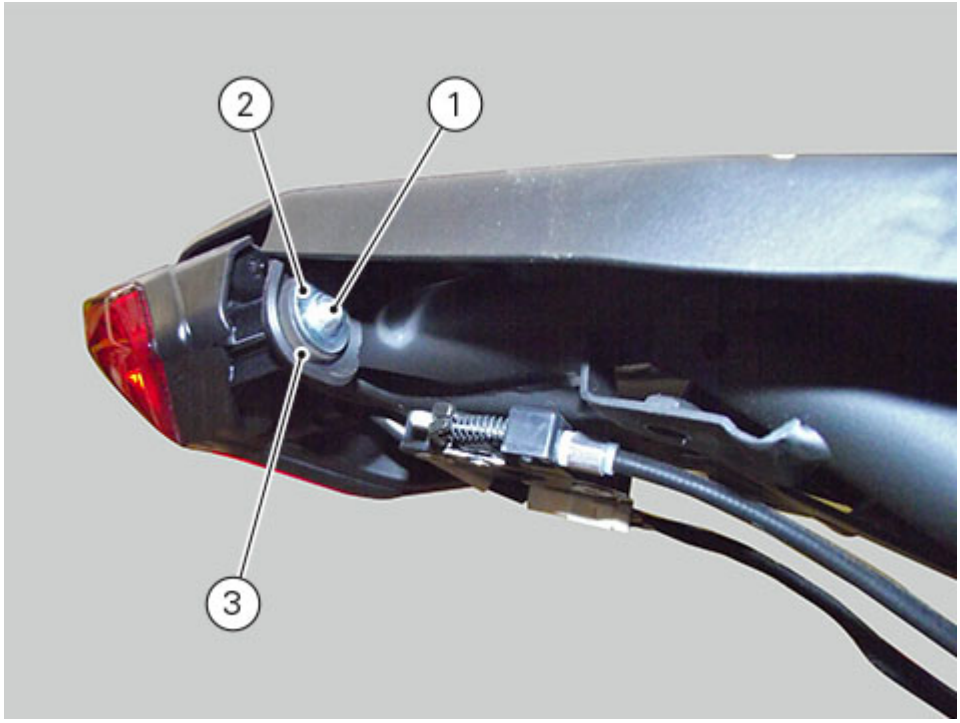

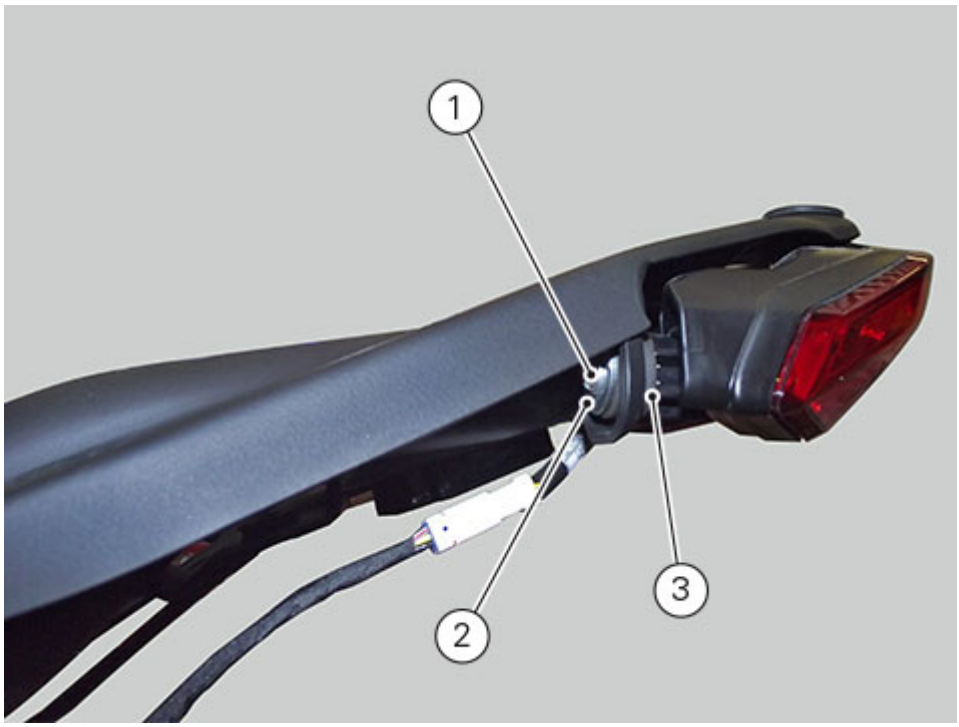

Refit the seat bottom cover (Refitting the seat bottom cover).
Refit number plate holder and passenger grab handles (Refitting the number plate holder).
Refit the seat (Refitting the seat).

Removing the tail light

Remove the seat (Removing the seat).
Remove the seat bottom cover (Removing the seat bottom cover).
Remove number plate holder and passenger grab handles (Removing the number plate holder).

Loosen and remove the two screws (1) and collect washers (2).
Check the conditions of the rubber elements (3).

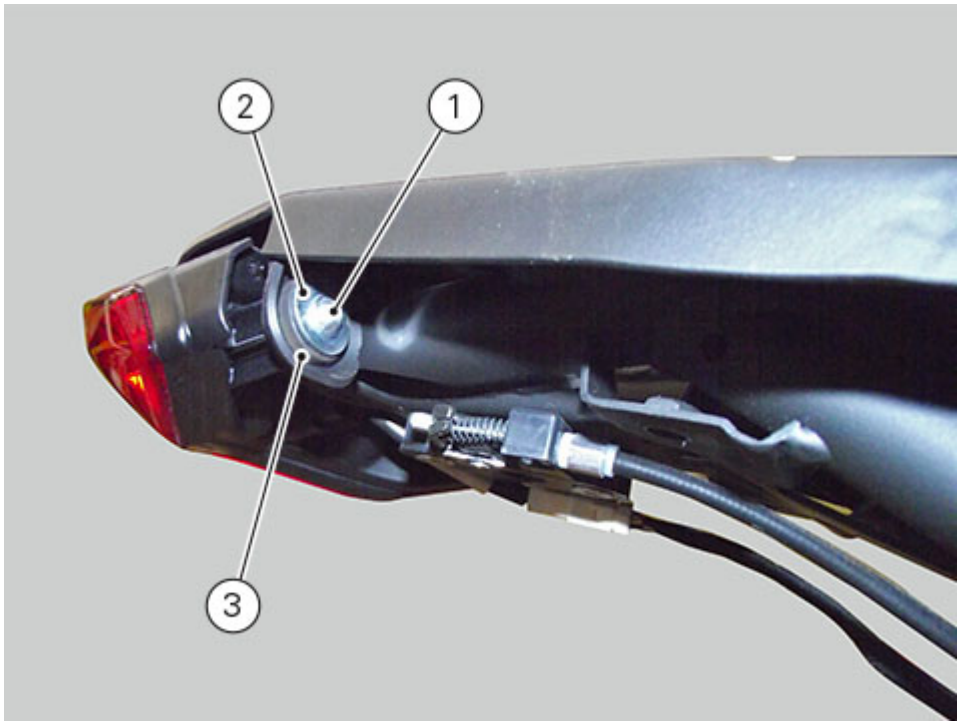

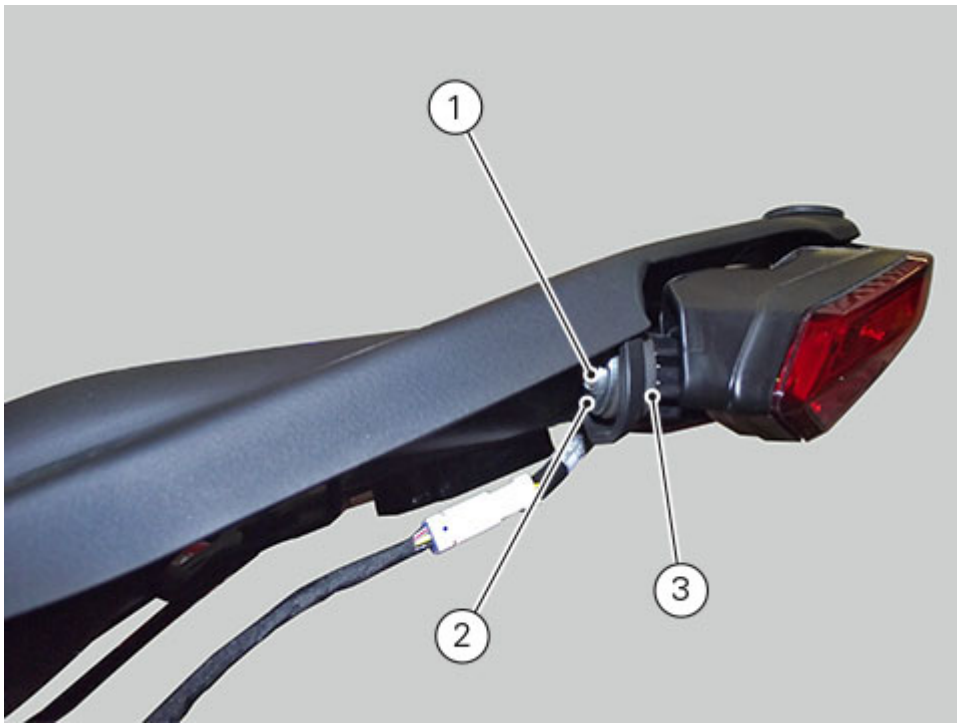

Remove tie (4) and disconnect tail light connector (5).

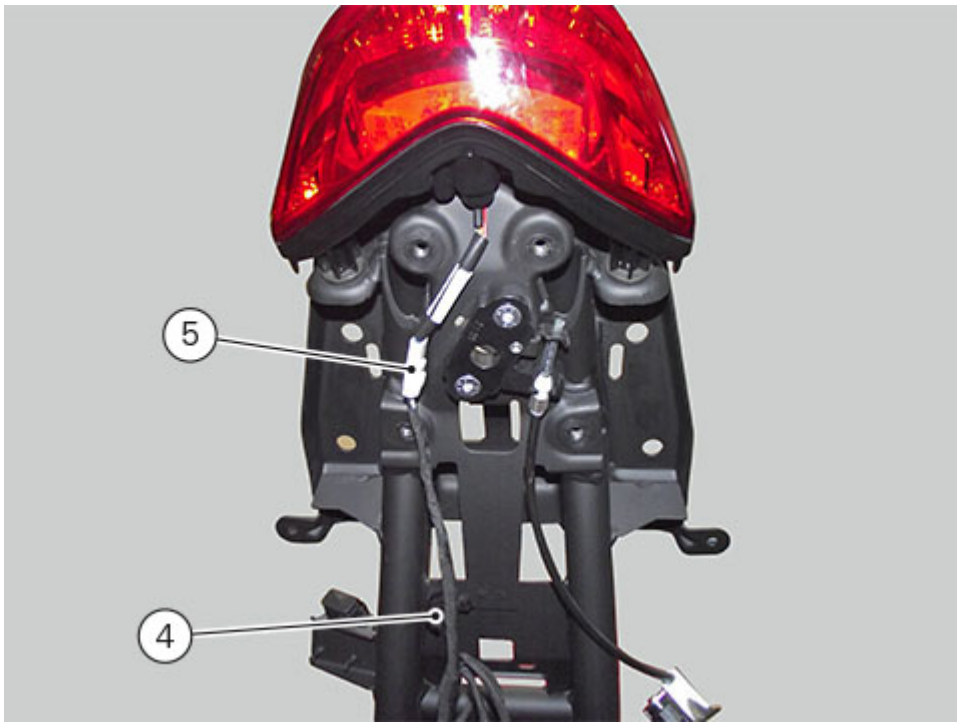

Slide tail light (6) out of vibration damper (B), working from behind.



Refitting the number plate holder

Restore number plate light wiring and position light (24), tightening the two screws (25) to a torque of 1.5Nm ±10%.

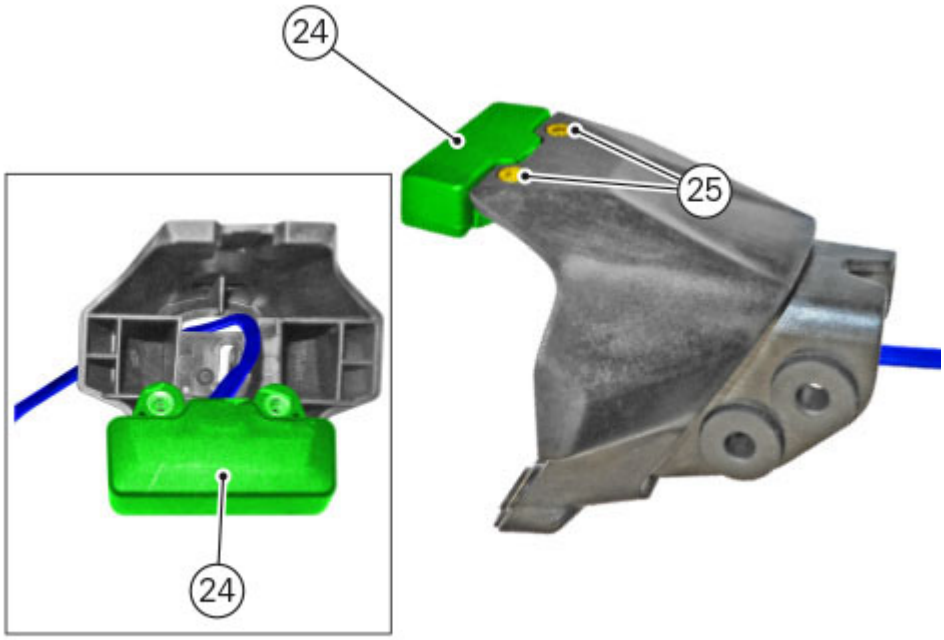

Position spacers with collar (23) and tighten the four screws (21) to inner nuts (22) to a torque of 5Nm±10%.

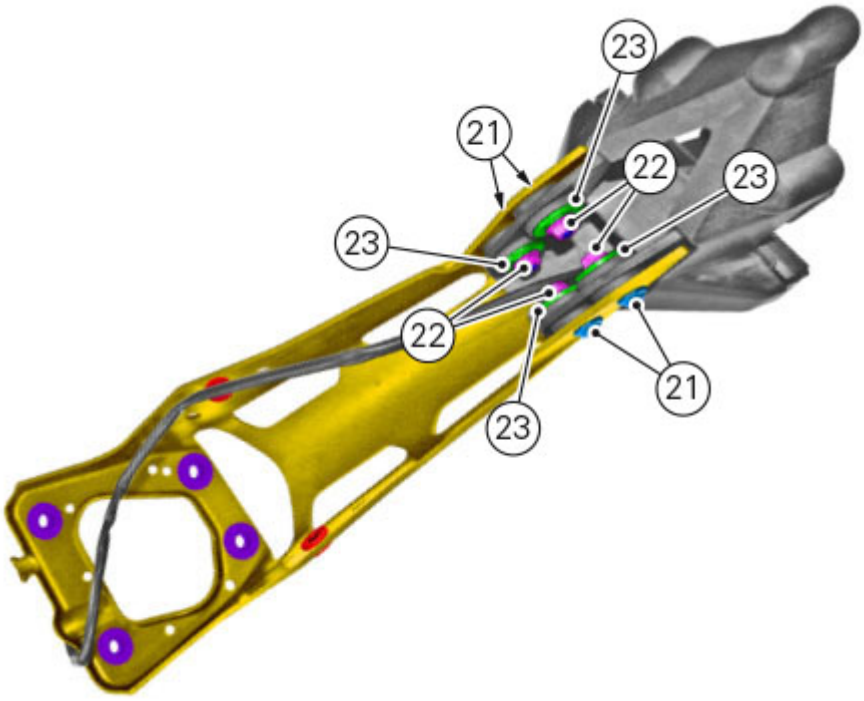

Check number plate holder assembly light, as indicated: it must be even.

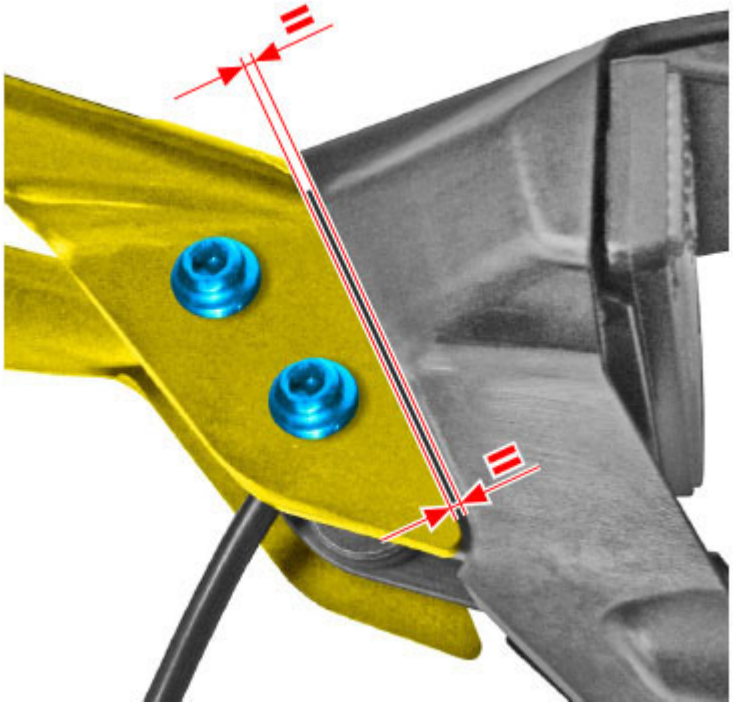

If previously removed, re-position number plate light cable (1), rubber blocks (20) and central body (19).

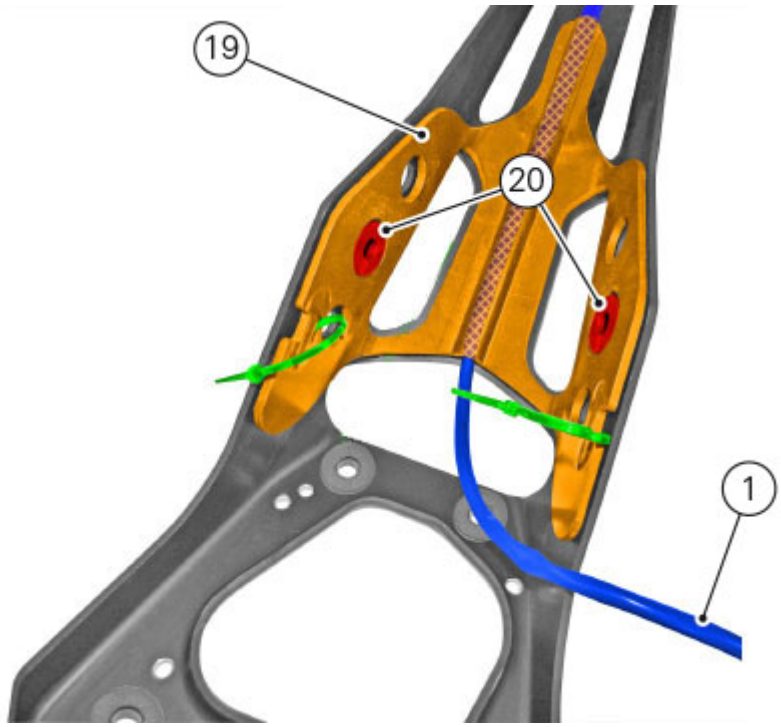

If previously removed, refit tail guard.

REFITTING THE TAIL GUARD

Position tail guard (8) on subframe and, working from the bottom, tighten the two screws (18) to a torque of 5Nm ±10%.

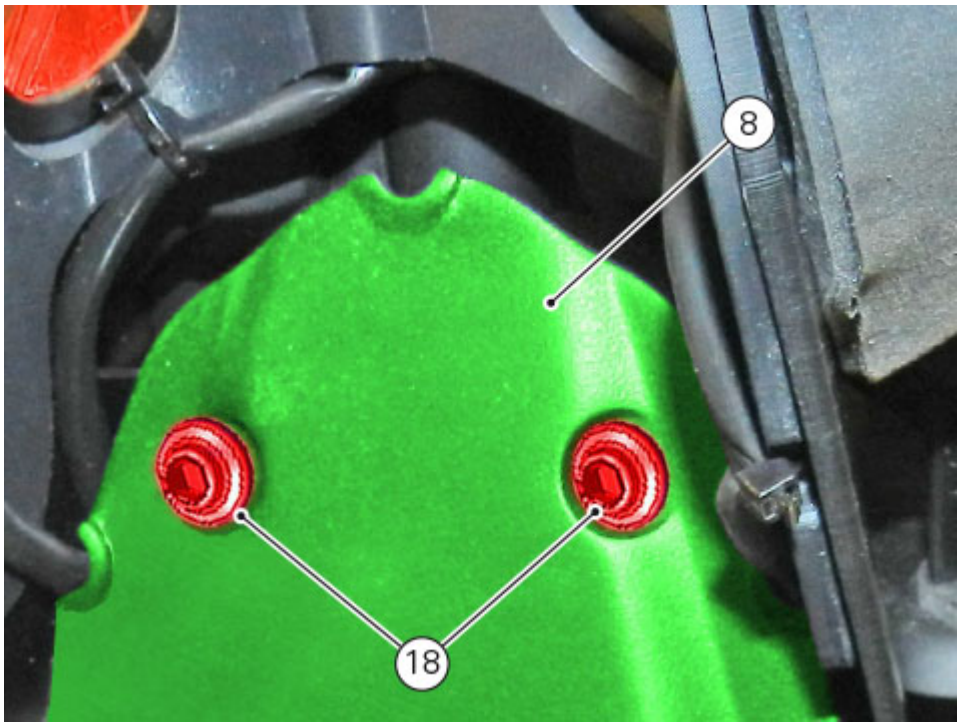

Position toothed washers (17) and tighten the two screws (16) to a torque of 3Nm±10%.

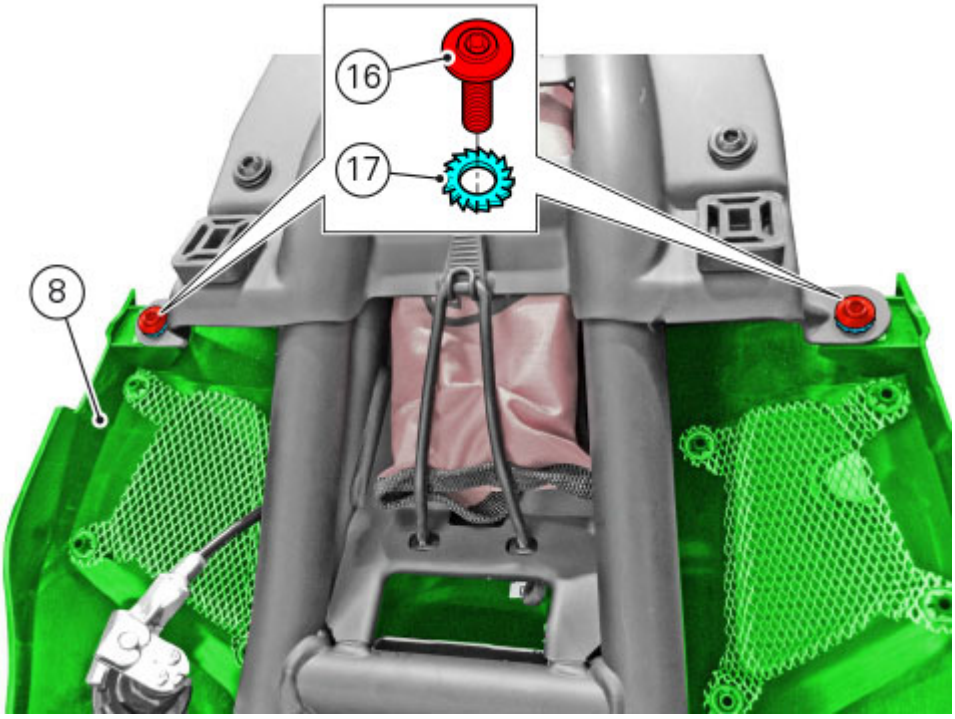

Position compartment (9) and secure it in place with vibration damper (15) on subframe bracket (E), under bracket (F).
Tie (C) rear wiring (14), as indicated.
Secure diagnostic socket (13) with ties (B) and (D).

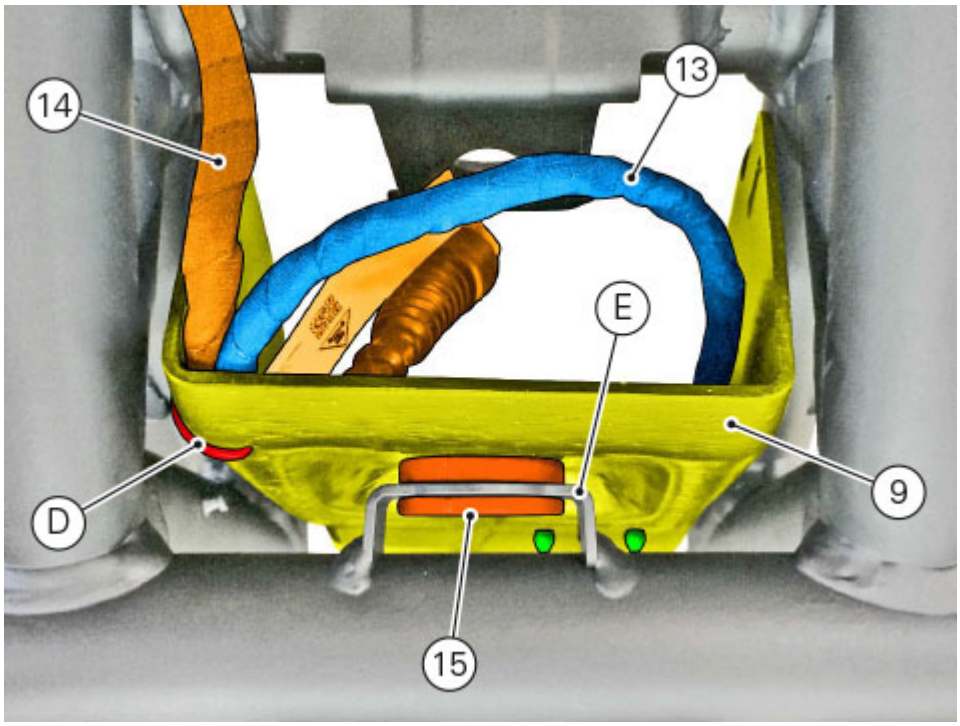

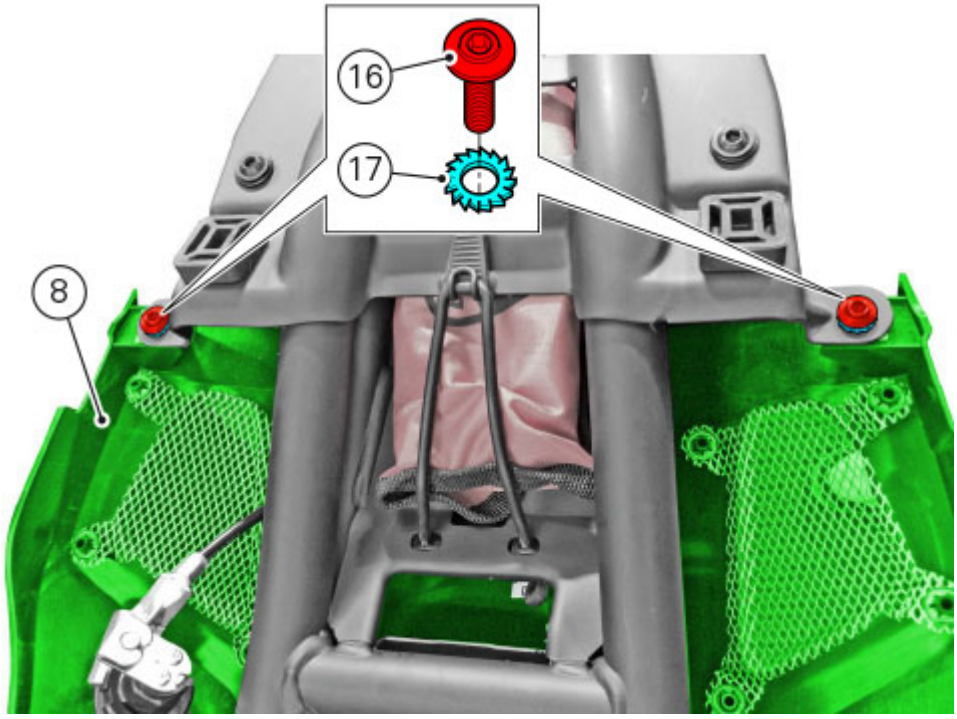

Position spacers (12) and collars (11), then tighten the two screws (10) to a torque of 3Nm±10%.

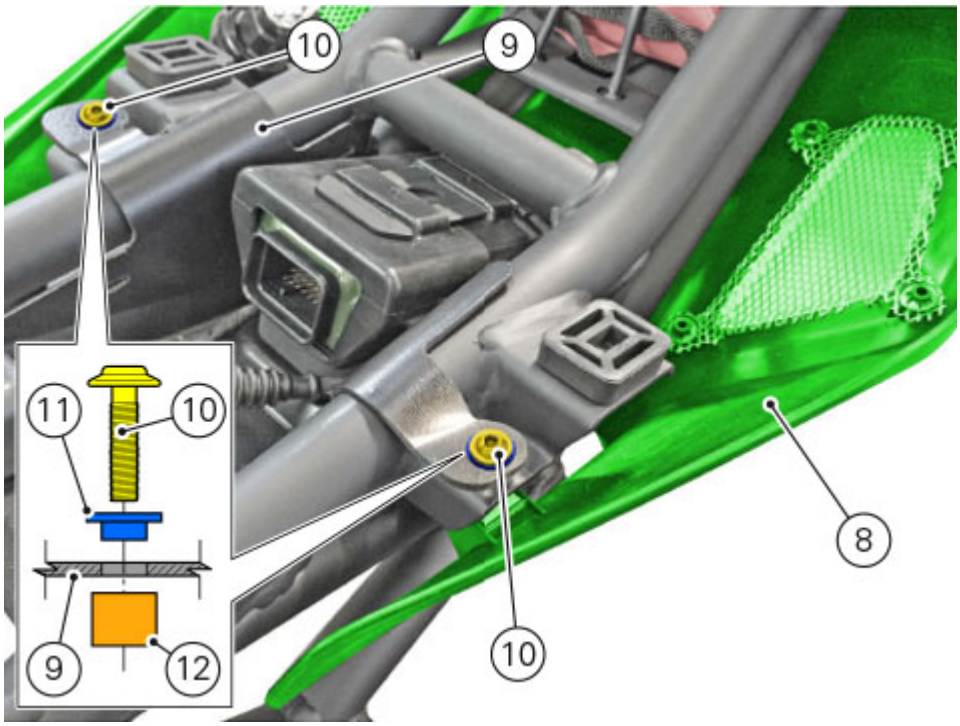

Refit the seat bottom cover (Refitting the seat bottom cover).
Refit the tail light (Refitting the tail light).
Refit the BBS control unit (Black Box System (BBS)).
If previously removed, refit passenger grab handles.

REFITTING THE PASSENGER GRAB HANDLES

By following the same procedure on both grab handles (5), tighten the two retaining screws (6) after having positioned lower spacers (7).

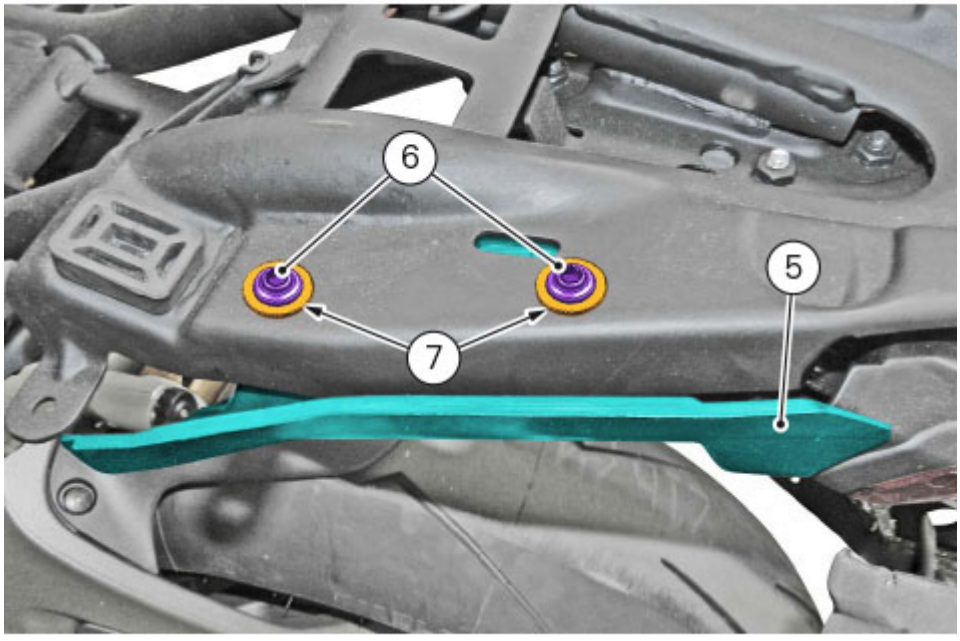

Refit rear turn indicators as indicated.

REFITTING THE REAR TURN INDICATORS

If rear turn indicators have been disassembled, position plate (Y) on support (Z) and tighten screw (X) to a torque of 3Nm±10%.

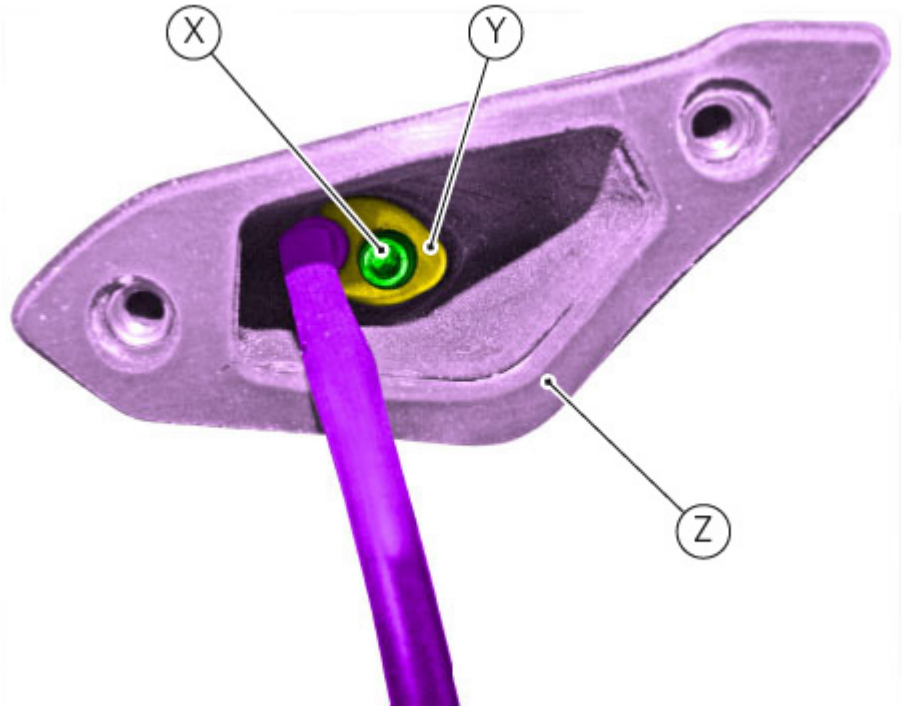

Working on both turn indicators, position lower washers and tighten the two support (Z) retaining screws (4).



Then complete number plate holder re-assembly procedure.

After having applied the indicated product and after having positioned lower spacers, tighten the four indicated screws in a cross pattern to a torque of 10Nm±10%.

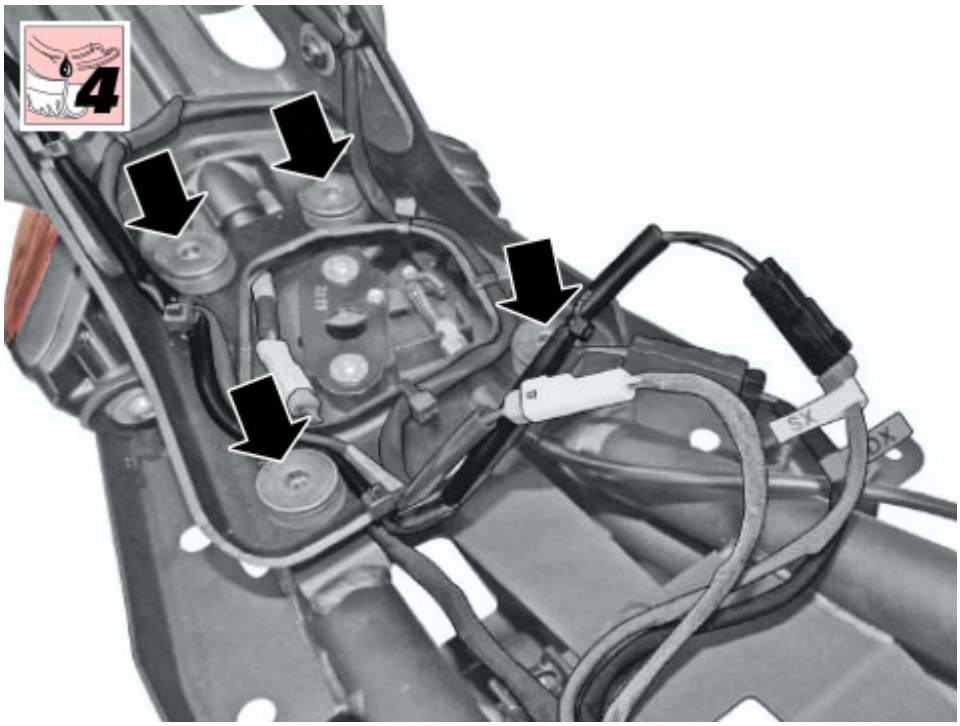

Restore number plate light wiring (1).

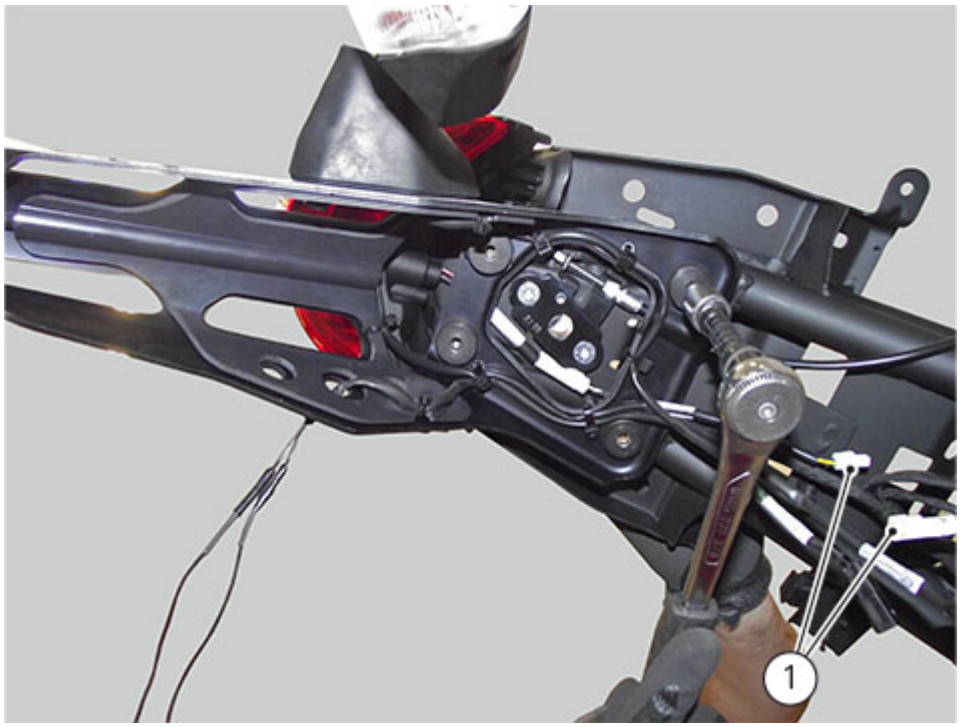

Restore RH (2) and LH (3) turn indicator connection.
Fasten rear wiring to ties (A).

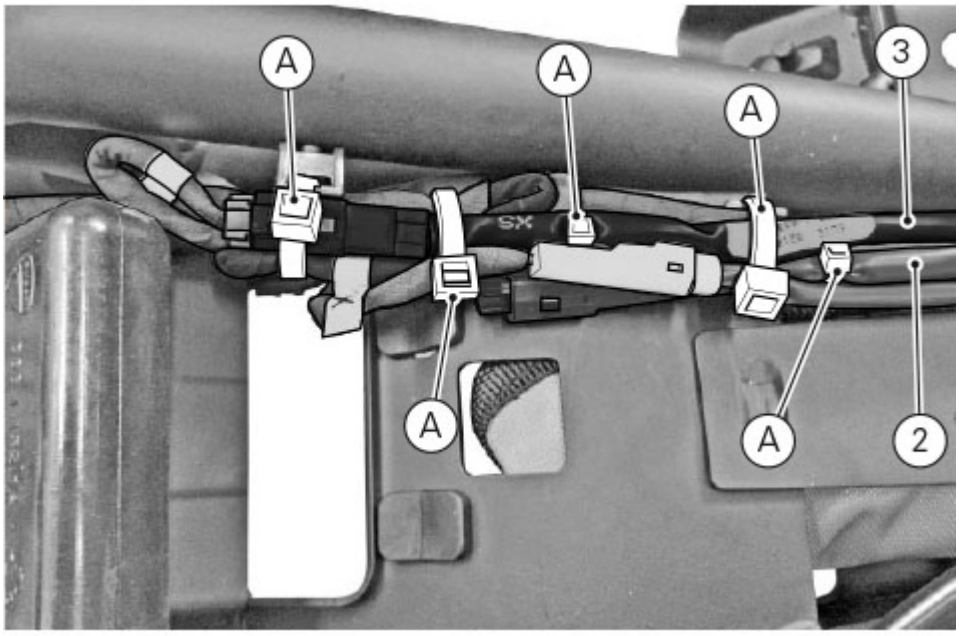

Refit the BBS control unit (Black Box System (BBS)).
Refit the seat bottom cover (Refitting the seat bottom cover).
Refit the tail light (Refitting the tail light).
Refit the seat (Refitting the seat).

Removing the number plate holder

Remove the seat (Removing the seat).
Remove the tail light (Removing the tail light).
Remove the seat bottom cover (Removing the seat bottom cover).
Remove the BBS control unit (Black Box System (BBS)).

Remove rear turn indicators as indicated.

REMOVING THE REAR TURN INDICATORS

Release rear wiring from ties (A).
Disconnect RH (2) and LH (3) turn indicator connectors.

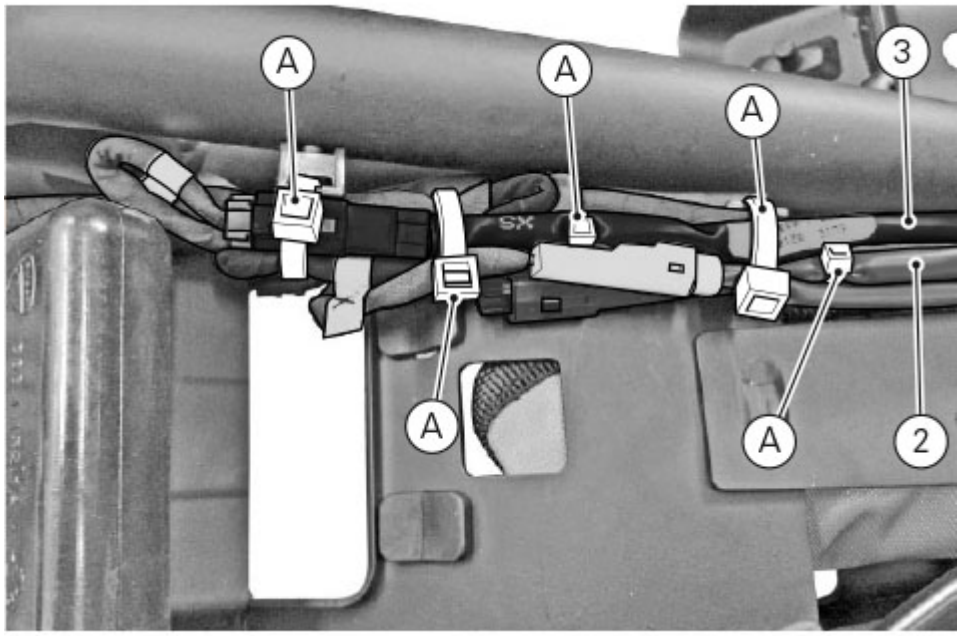

Disconnect the number plate light wiring (1).
Loosen the four retaining screws and collect the relevant lower collars.

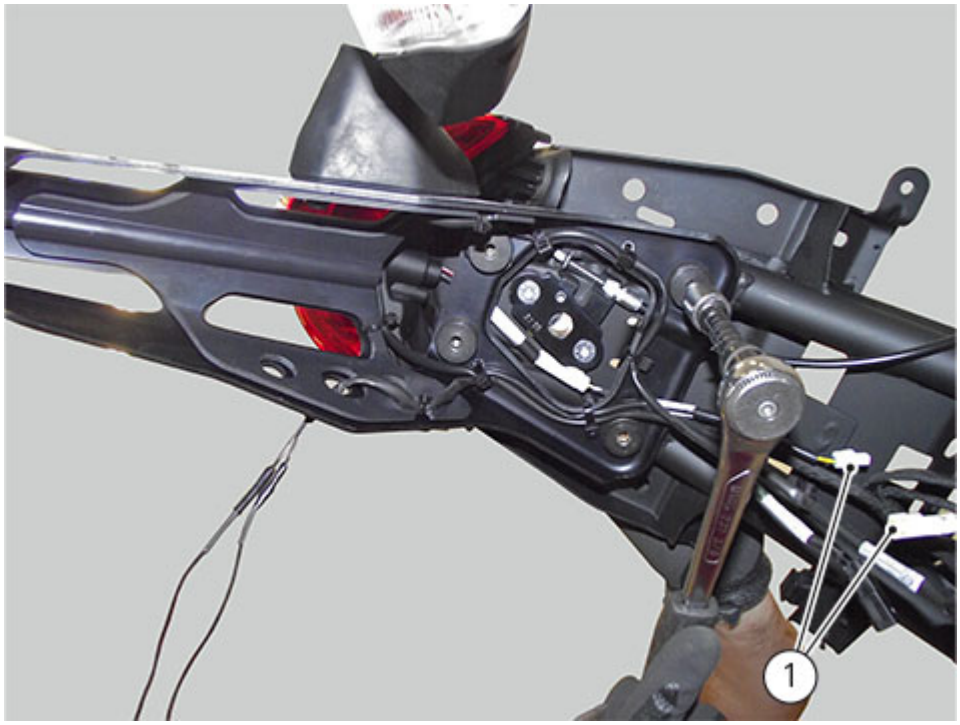

If necessary, remove turn indicators: work on both sides and loosen the two screws (4) for each turn indicator,

then collect the relevant lower washers.



If necessary, further disassemble turn indicators: loosen screw (X) collecting plate (Y) from support (Z), then release components.

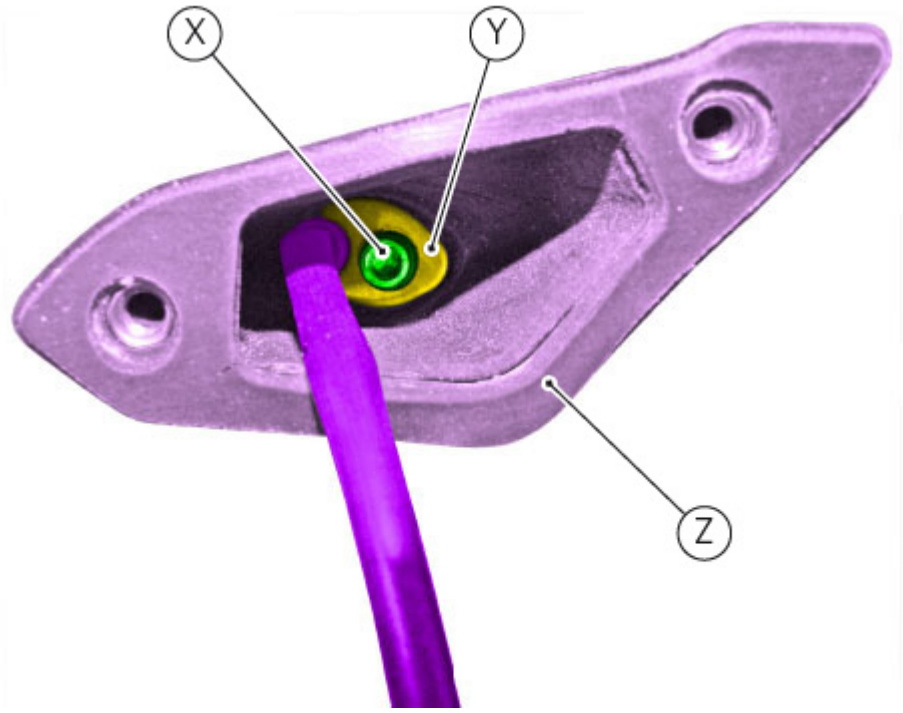

PASSENGER GRAB HANDLES

If passenger grab handles (5) have to be removed, follow the same procedure on both of them, loosen the two retaining screws (6) and collect lower spacers (7).

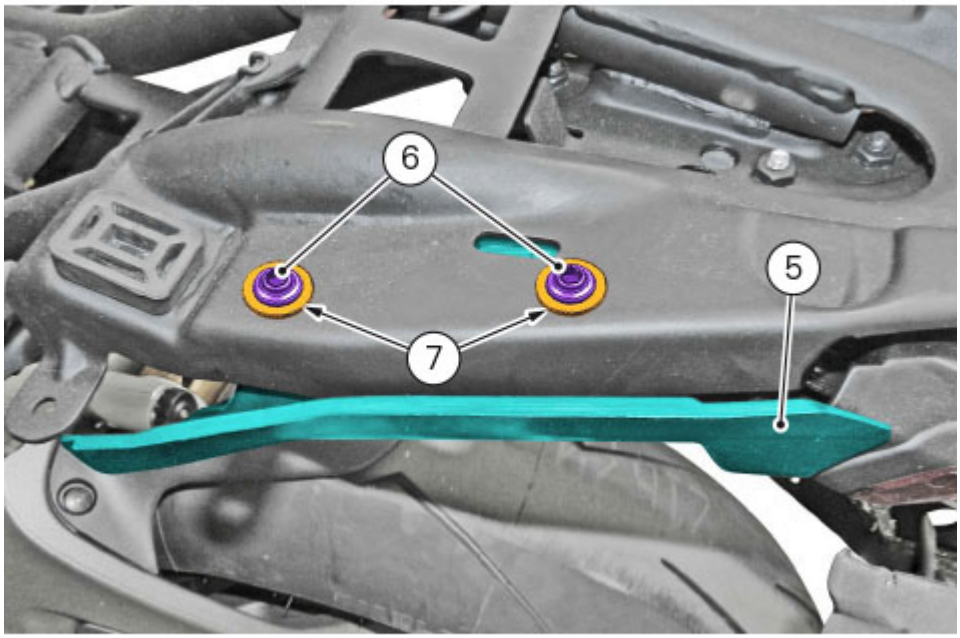

TAIL GUARD

If tail guard (8) has to be removed, remove control unit support compartment (9).
Loosen the two screws (10) and collect the two collars (11) and the relevant lower spacers (12).

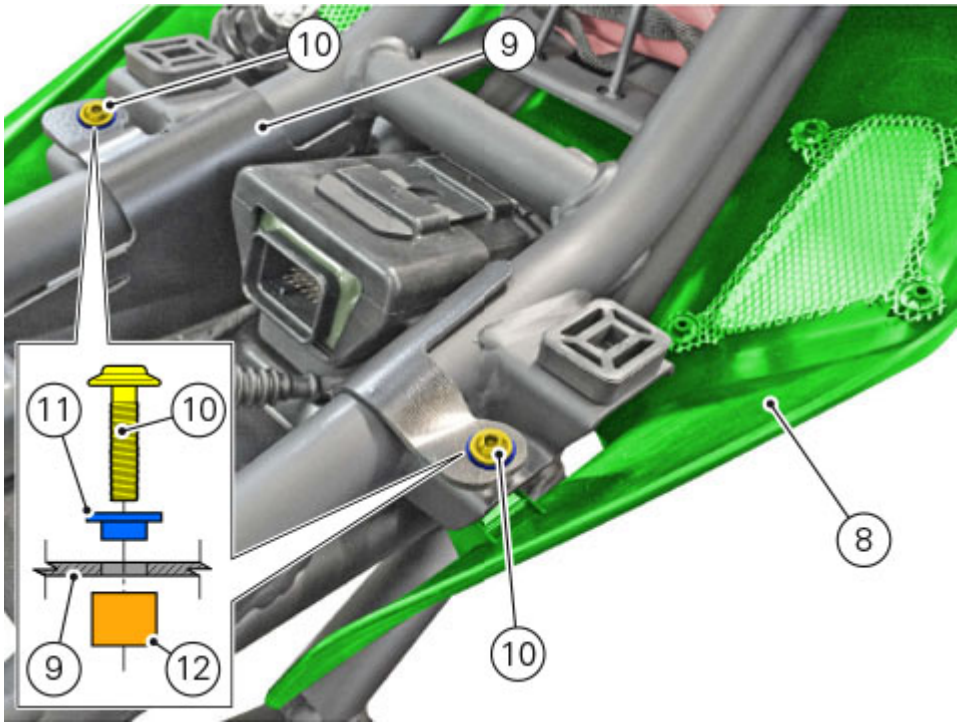

Release diagnostic socket wiring (13) from ties (B) and (D).
Release rear wiring (14) from tie (C). Release compartment (9), sliding it upwards and taking special care to vibration damper (15) on subframe bracket (E) under control unit bracket (F).

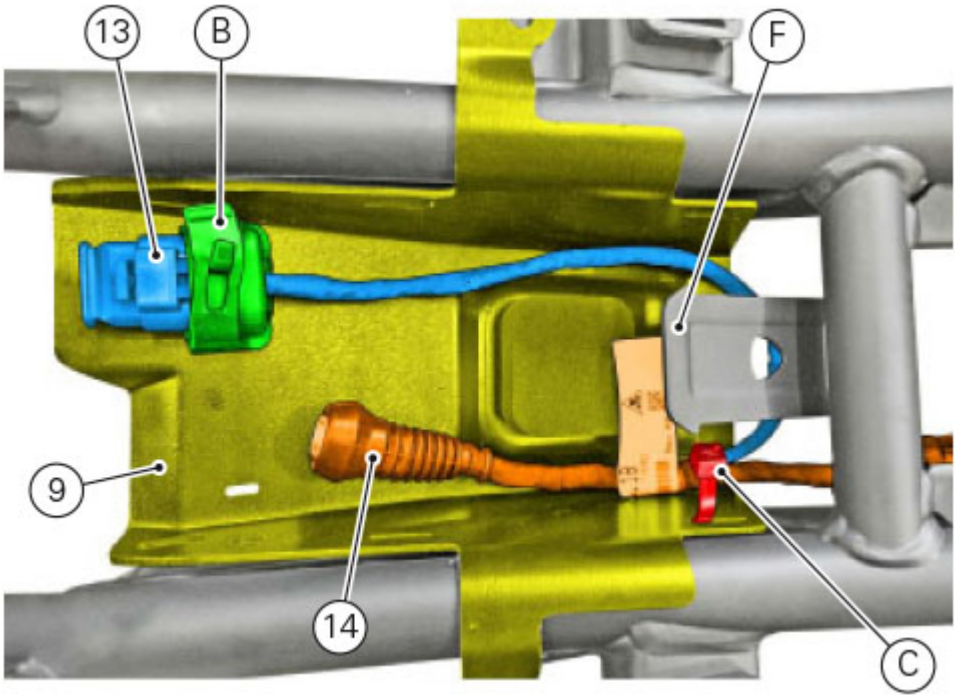

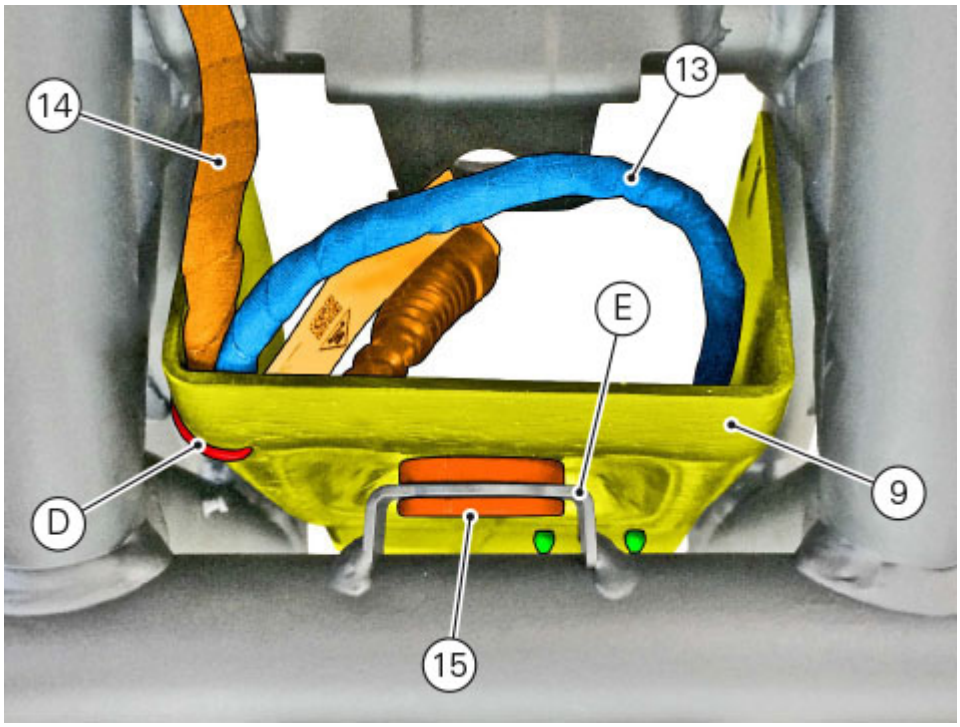

Loosen the two screws (16) and collect the lower toothed washers (17).

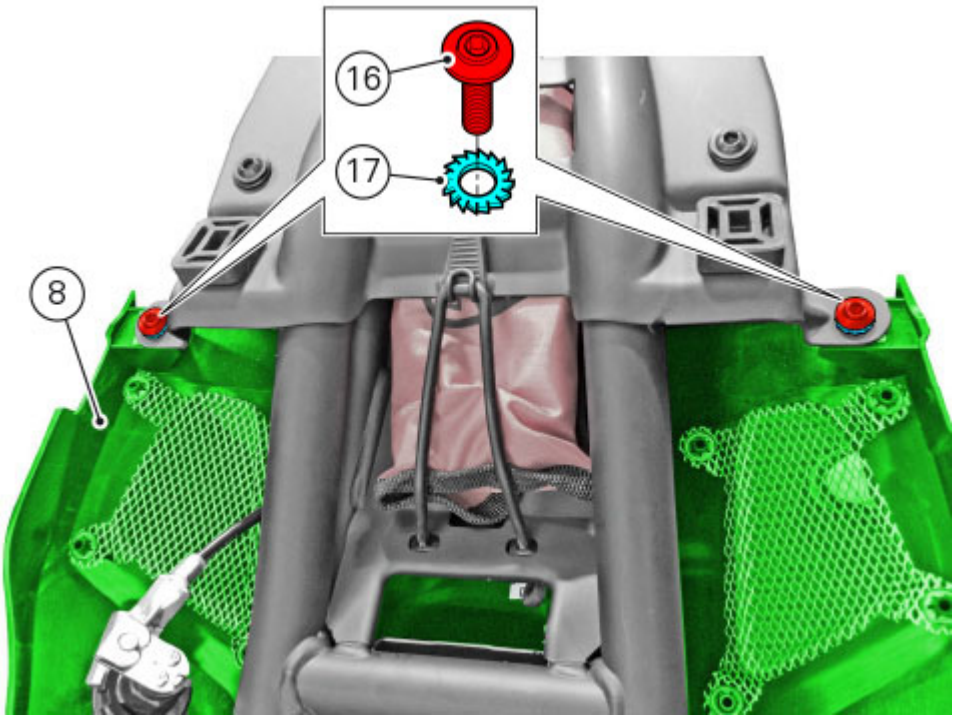

Working on subframe lower side, loosen the two screws (18) and remove the tail guard (8).

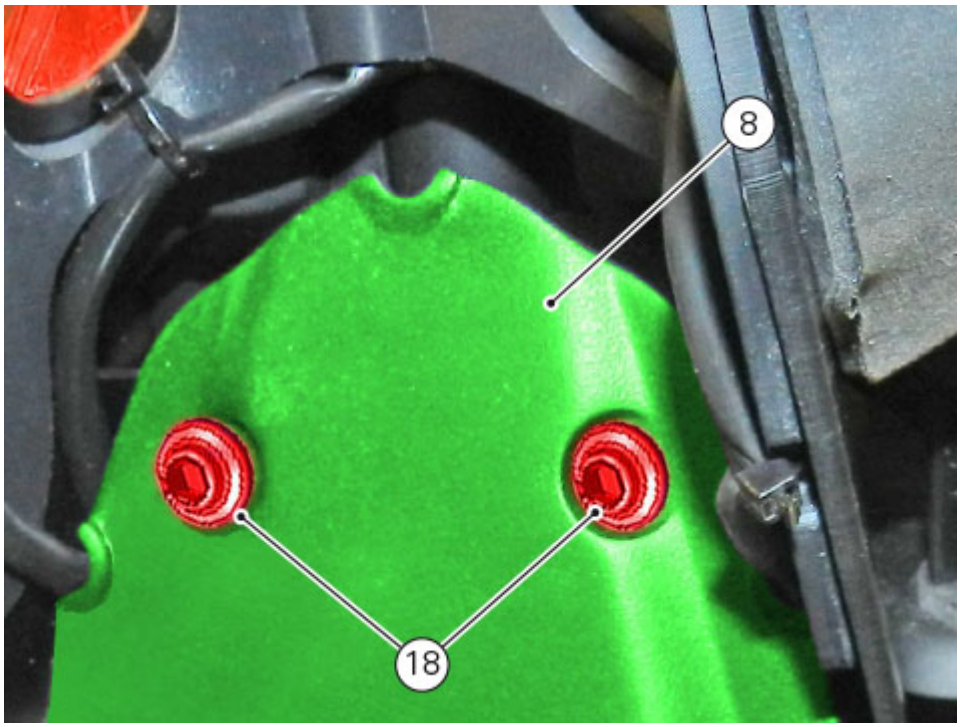

After having collected central body (19), collect rubber blocks (20), and release number plate light cable (1).

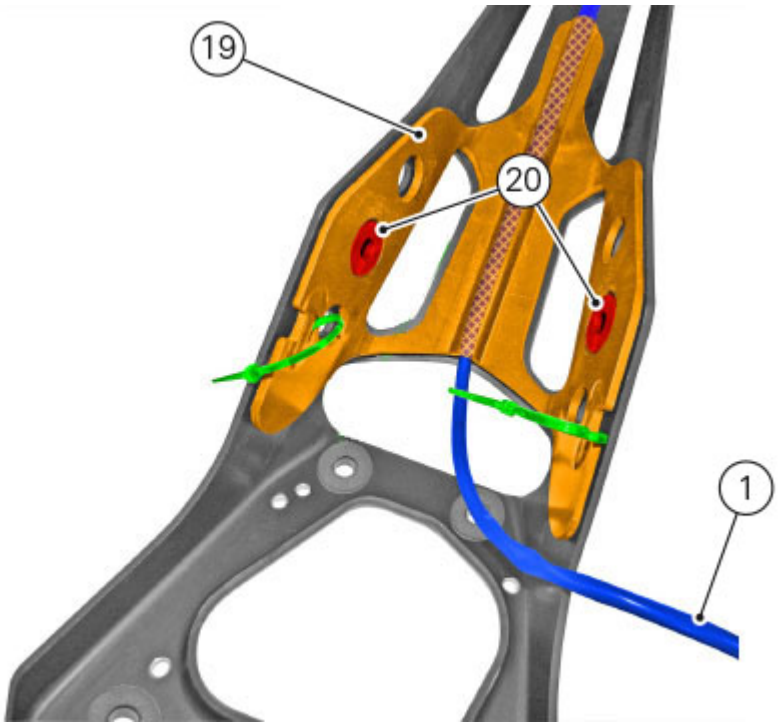

If necessary, loosen the four screws (21) and collect the four relevant nuts (22) and lower spacers with collar (23).

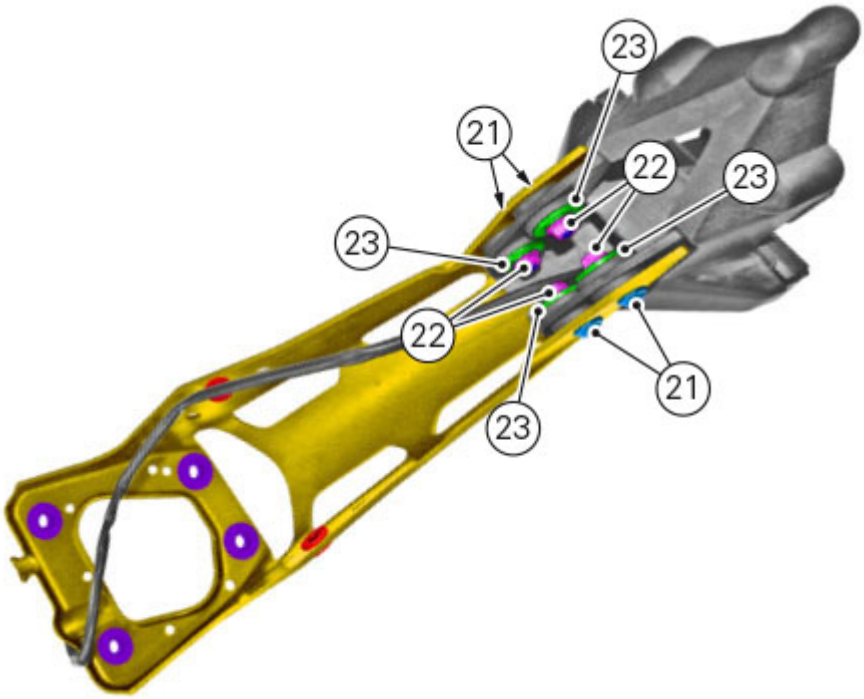

If necessary, remove number plate light (24), loosen the two screws (25) and remove it, taking care to wiring passage.

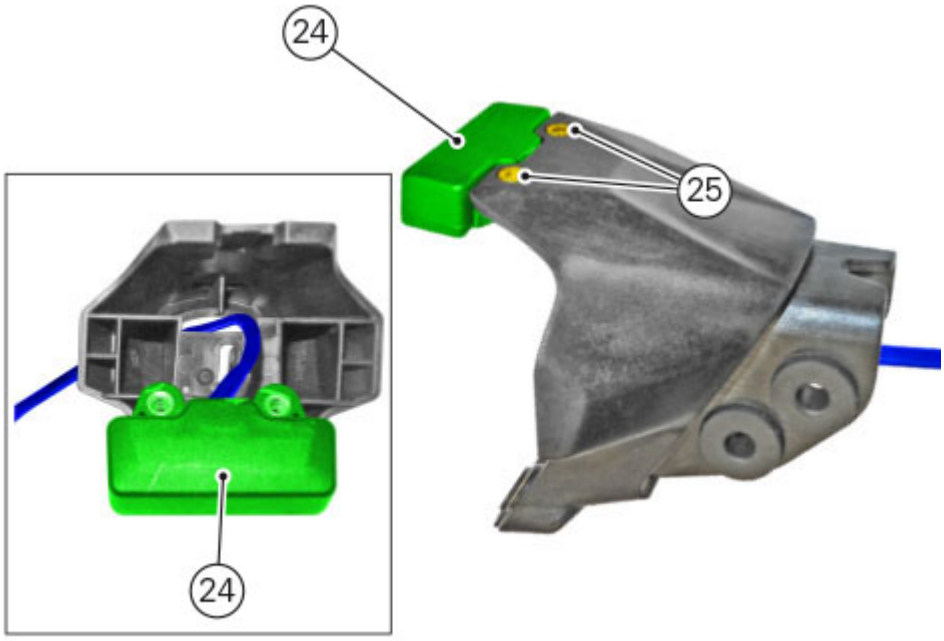
24
25
24

Refitting the electric components compartment

If previously removed, re-assemble the battery mount, as specified.

Fit upper vibration dampers (16) using the specified product.

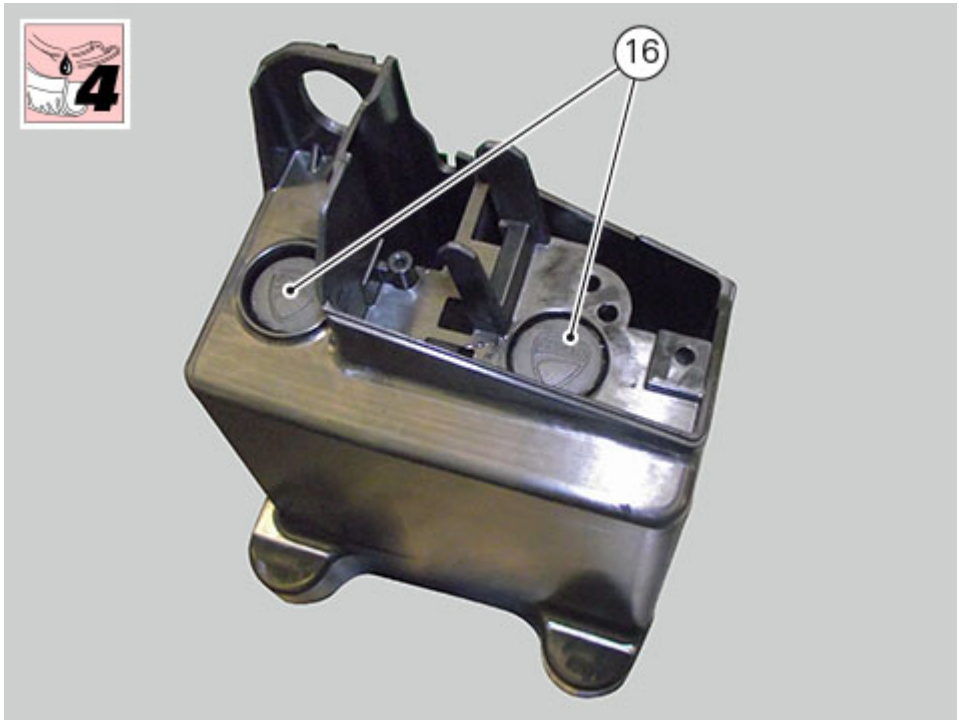

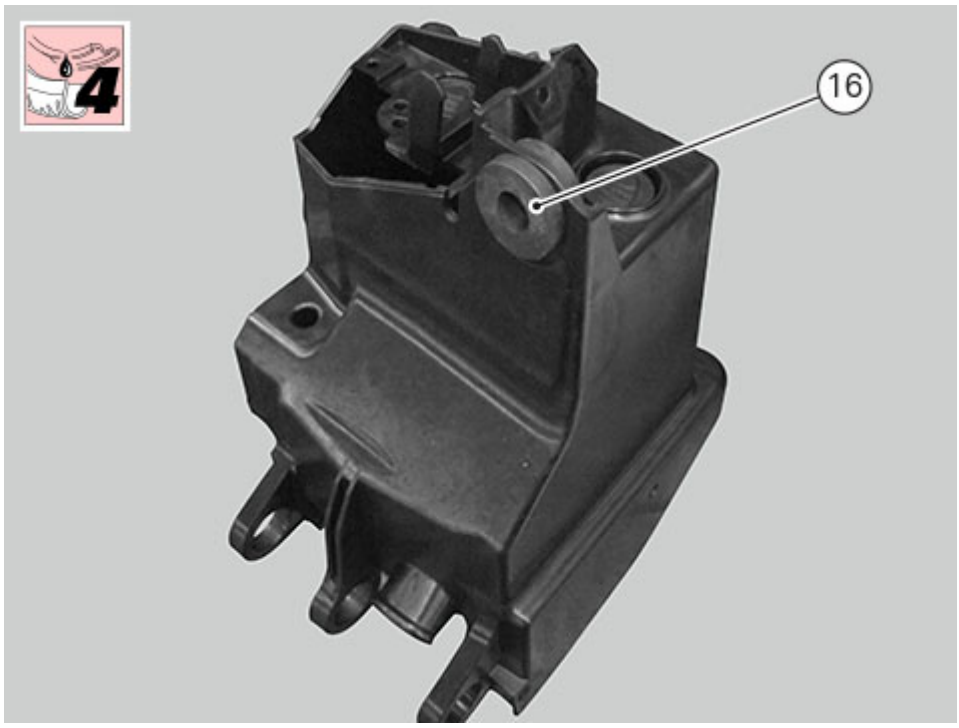

Smear vibration dampers (17) with the specified product before fitting them.
Fit and secure in place wiring (18), as shown in the figure.

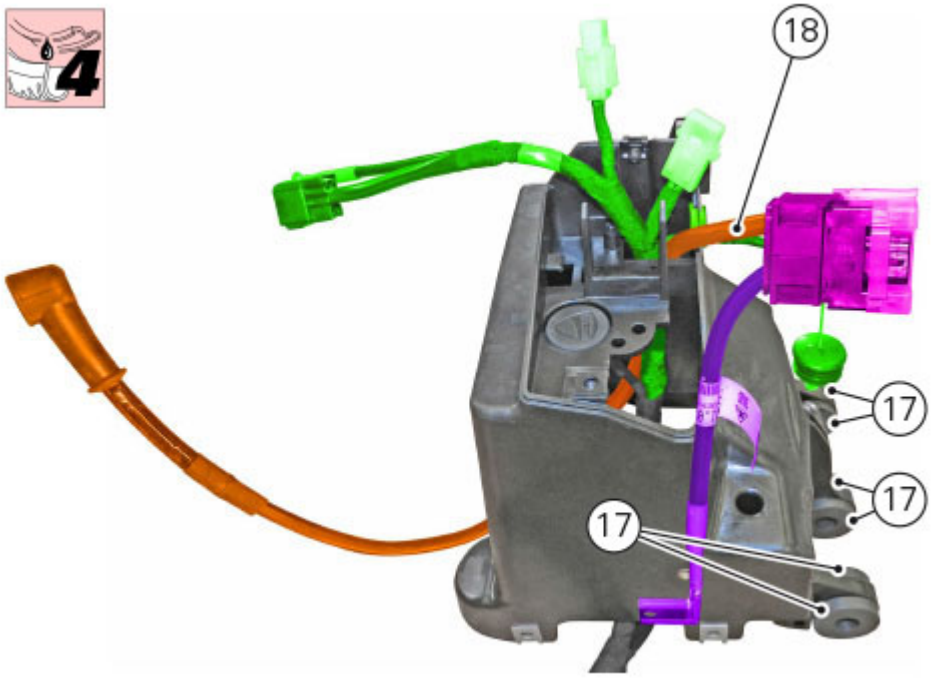

For wiring correct routing, refer to "Routing of wiring on frame".

Fit neutral sensor cable (19) securing it in place with seal (20).

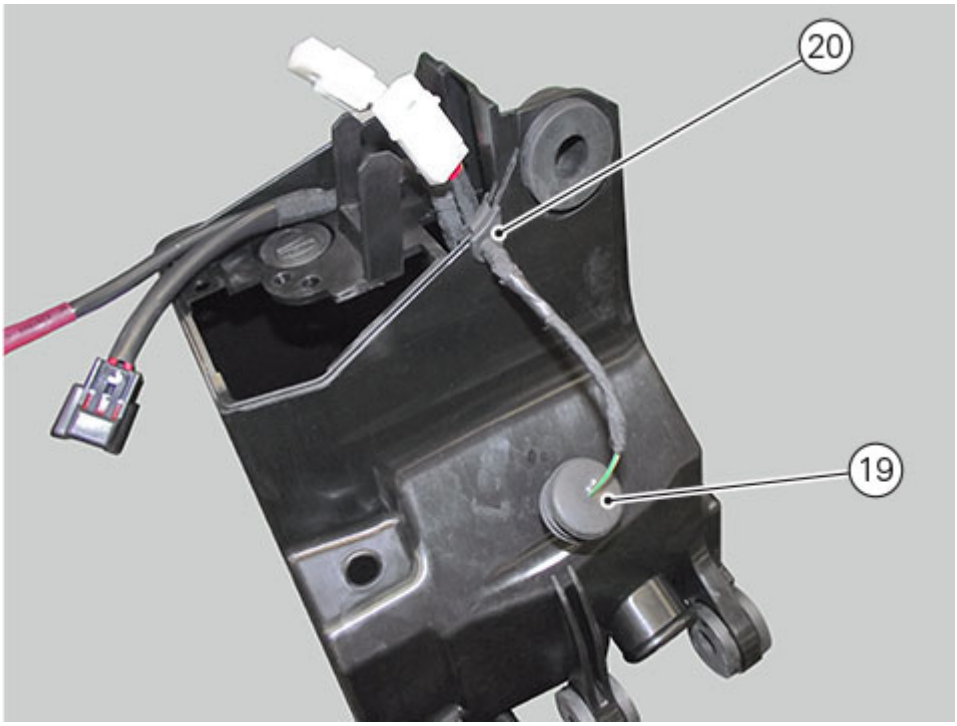

Fit ABS fuse holder (21) by tightening screw (22).
Position the two ABS fuses (12).

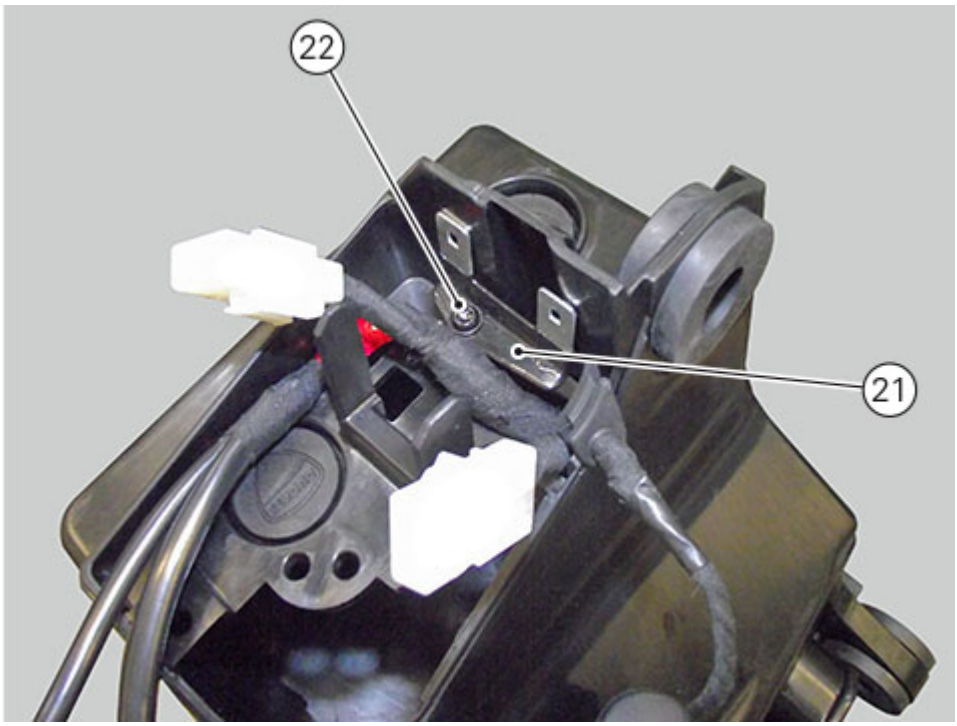

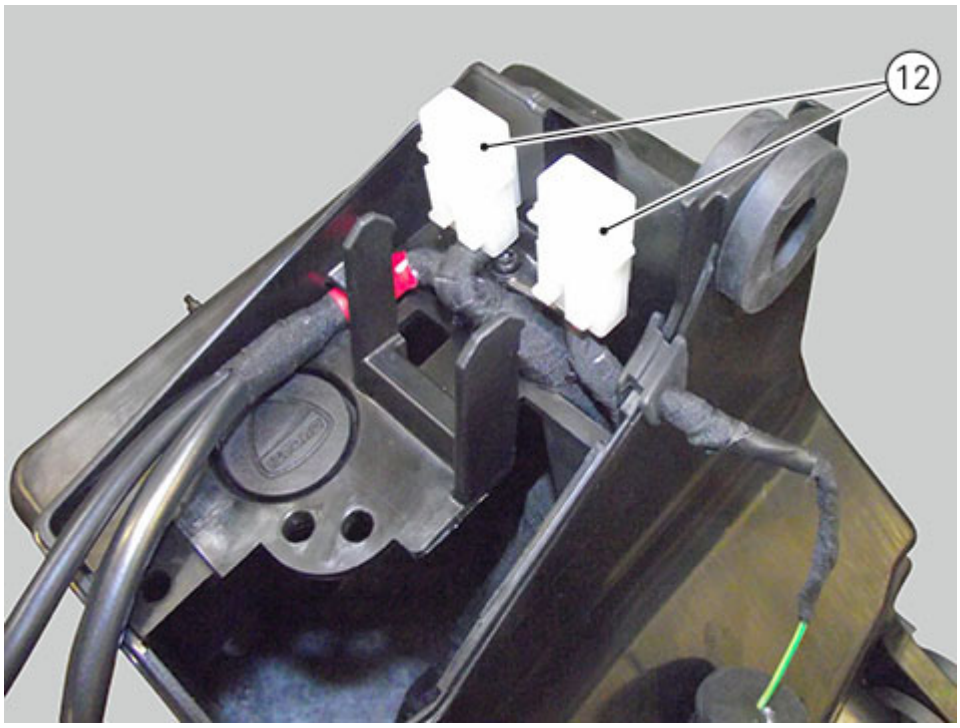

Connect cables to solenoid starter, tightening the two screws (23) to a torque of 5 Nm.

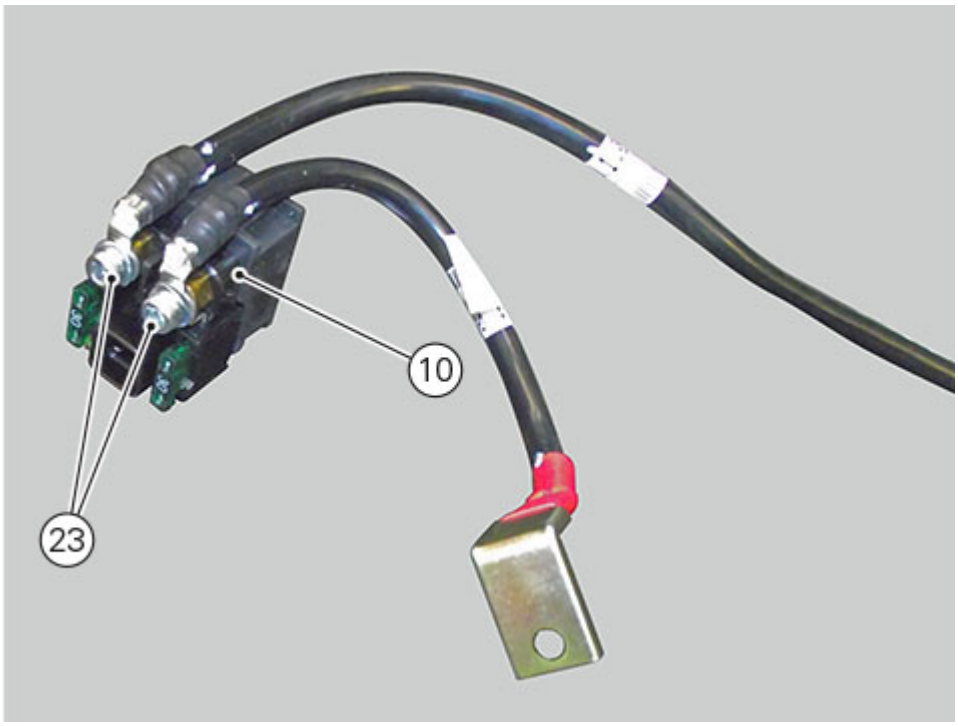

Install protection lid (24) by engaging it inside tab (A).

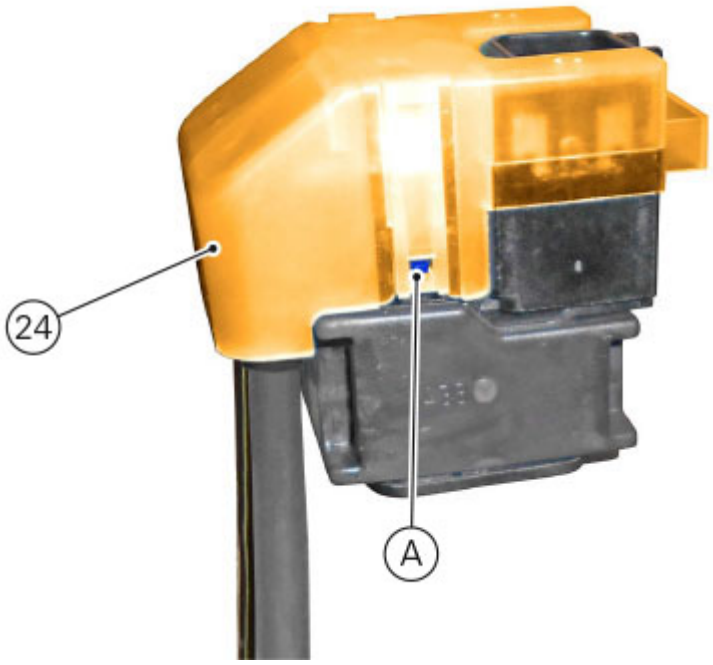

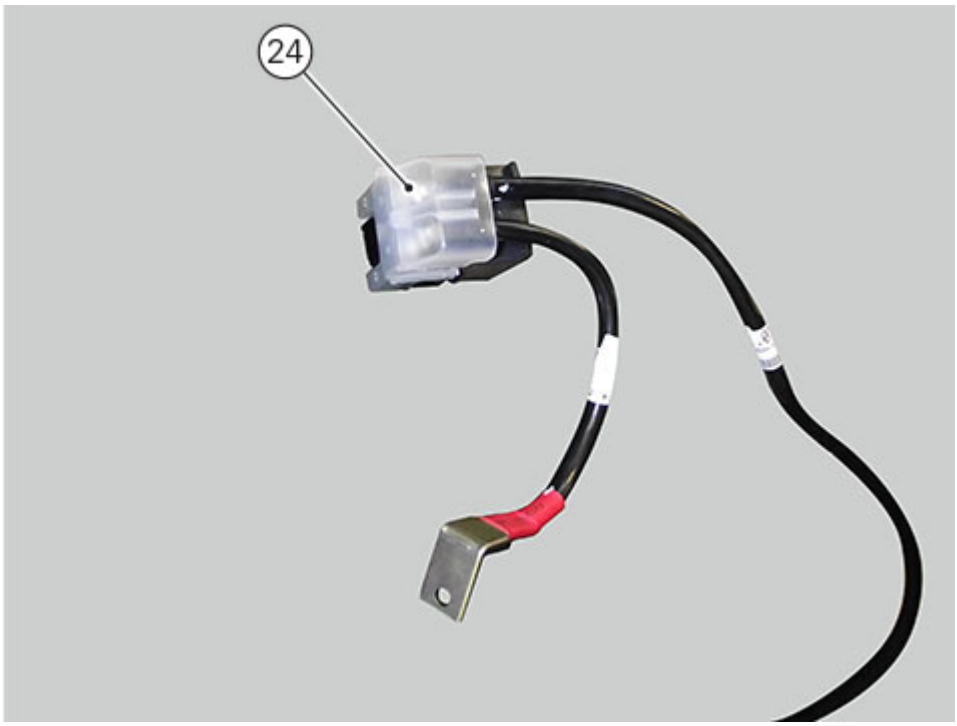

Fit solenoid starter (10) by securing it in place through the relevant fasteners (11).

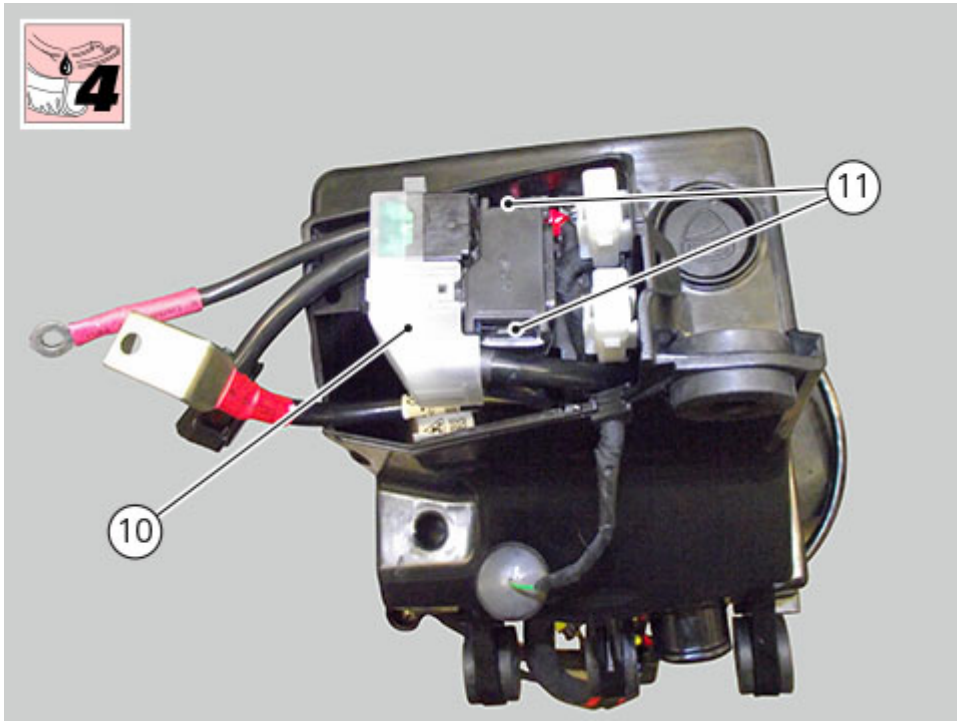

Fit service pin (X) by inserting it inside the recess present on electrical components compartment, as indicated.

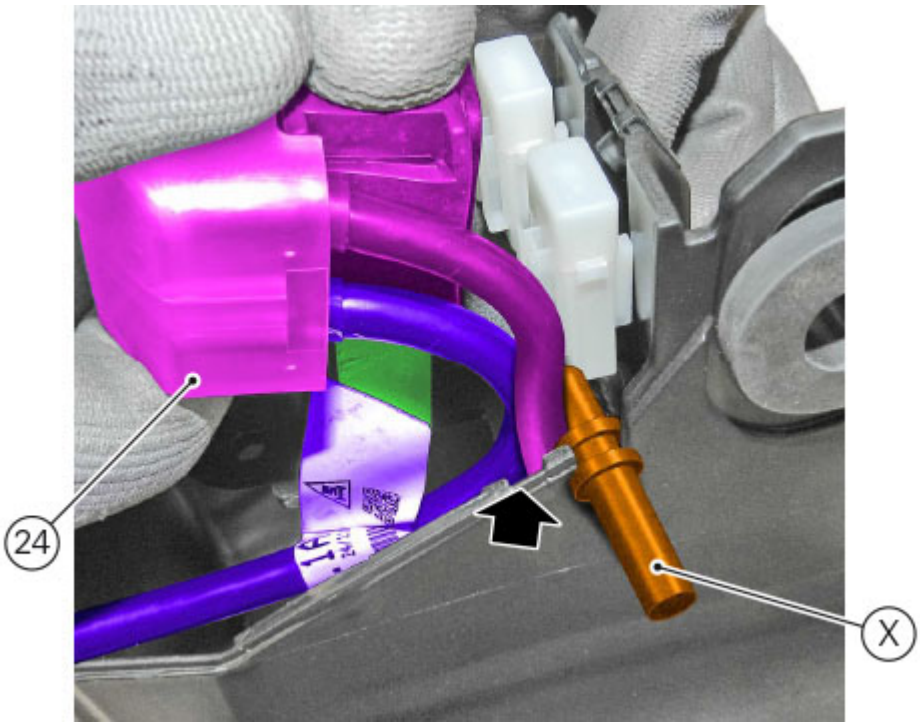

Connect solenoid starter connector (10), positioning gear sensor cable (26) as indicated.

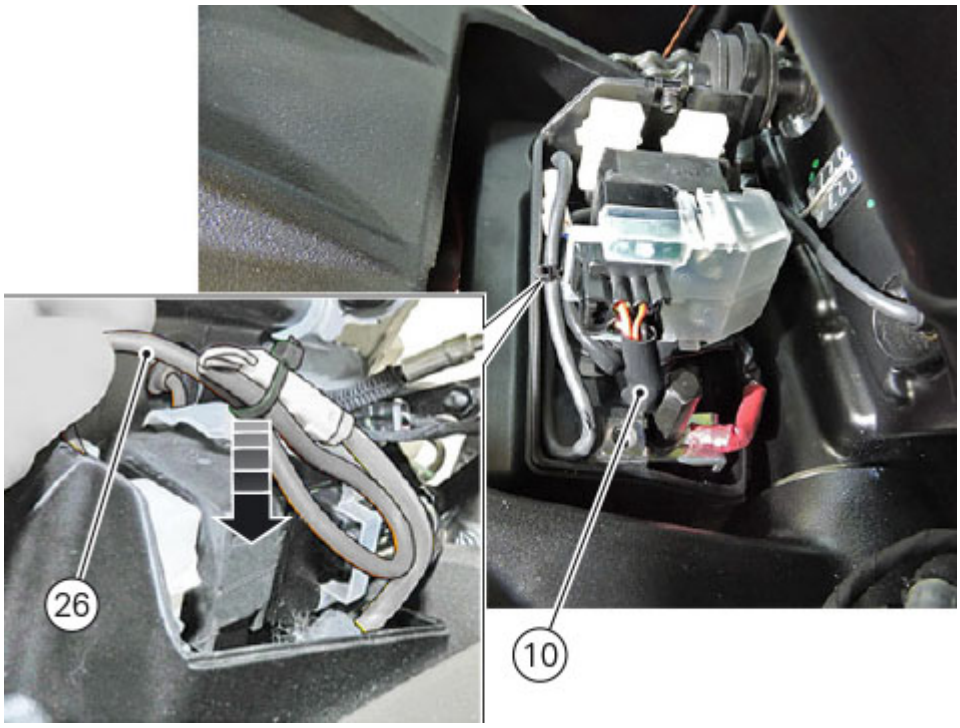

Tie battery negative cable (28), solenoid starter/starter motor cable (29) and main wiring.

Important

Battery negative cable must be free to move and does not have to cross other cables.

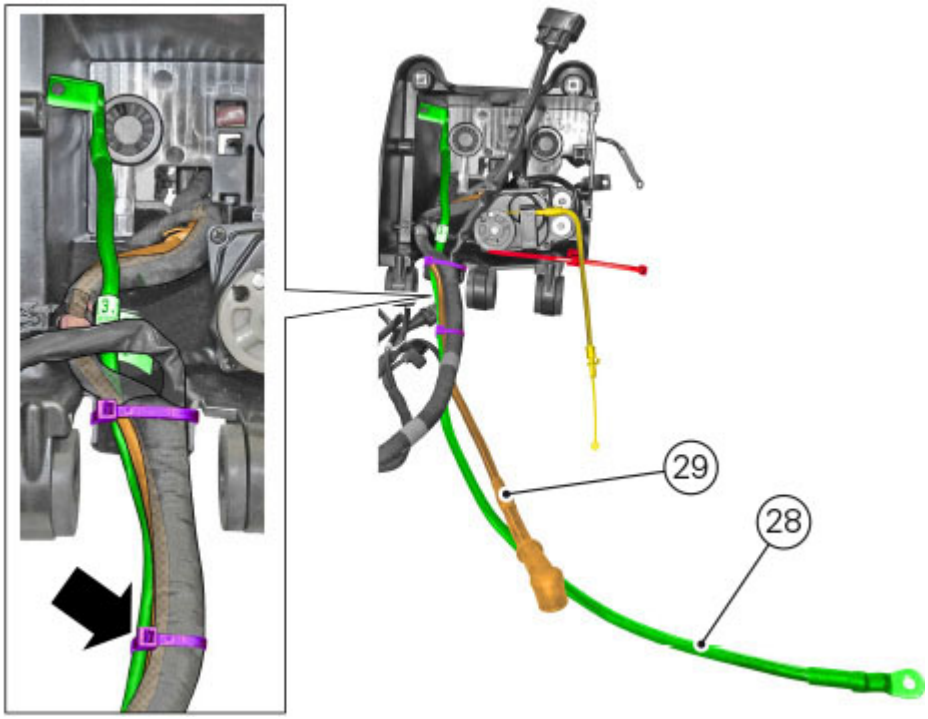

Fit exhaust valve motor (14), connect connector (13) and secure motor in place with screws (15), to be tightened to a torque of 3.5Nm ± 10%.

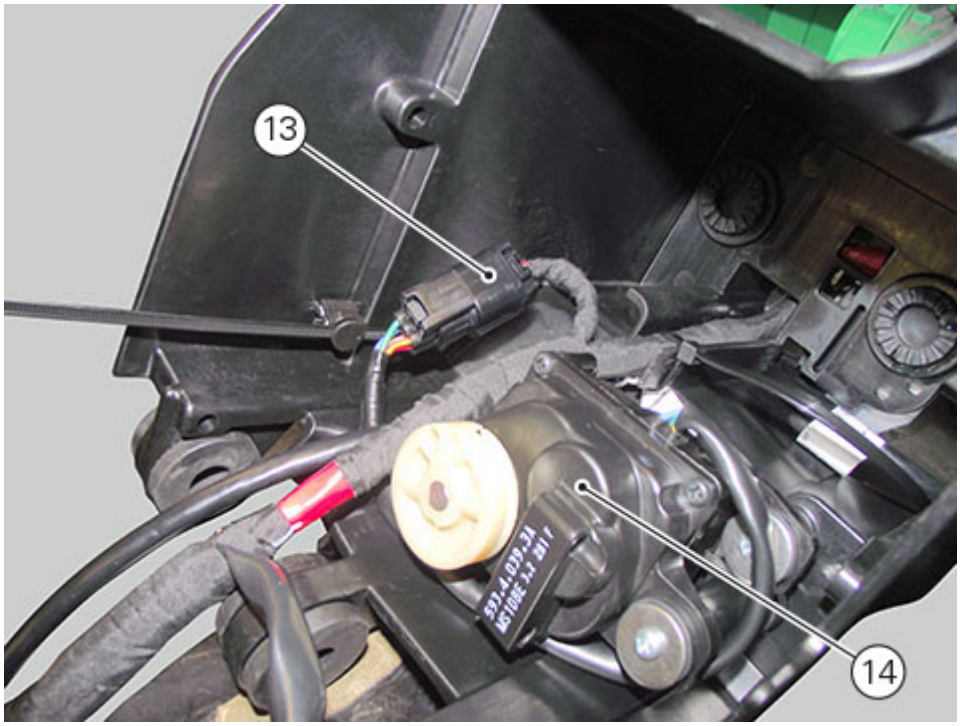

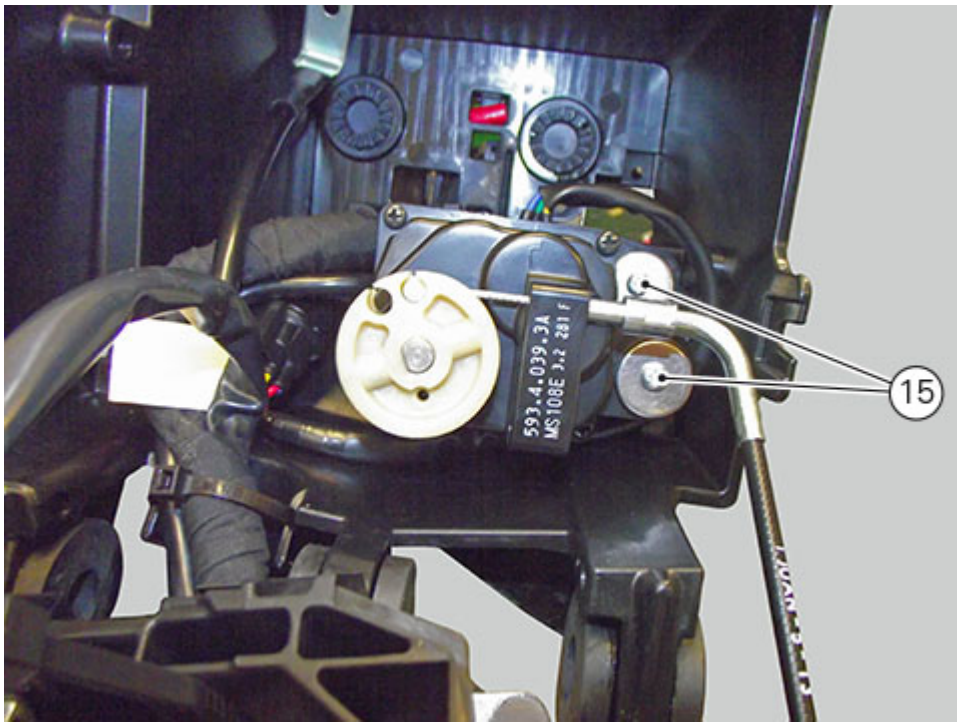

Connect the exhaust valve motor cable (Refitting the exhaust system).
After having fitted the two lower spacers (26), close cover (27) and secure voltage regulator (6) in place with the two screws (5), battery mount cover.
Tighten the two screws (5) to a torque of 8Nm±10%.

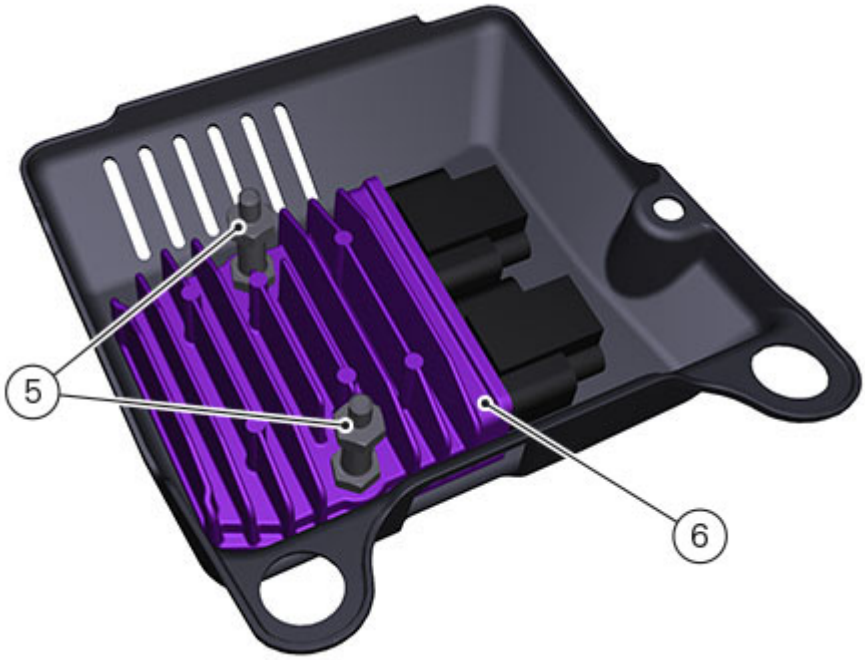

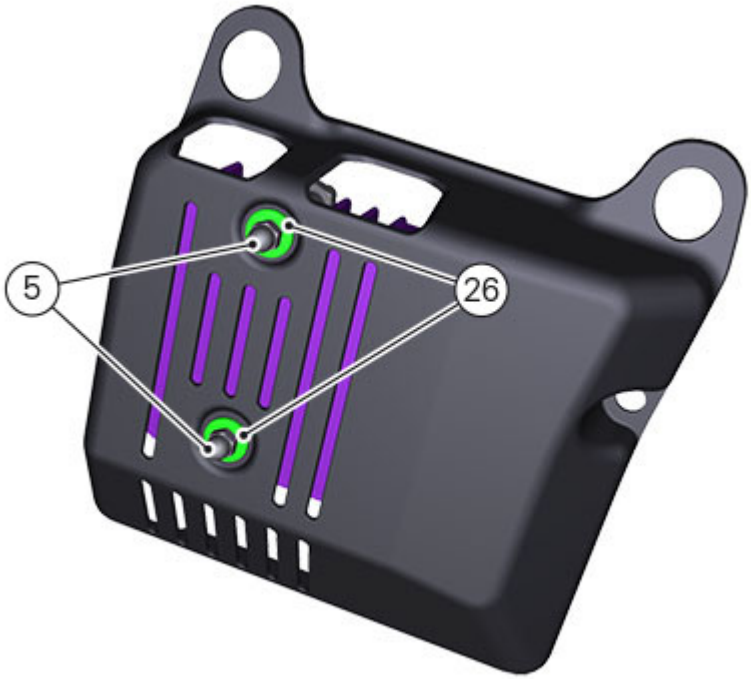

Open cover (27) and connect the two regulator connectors (3) and (4).

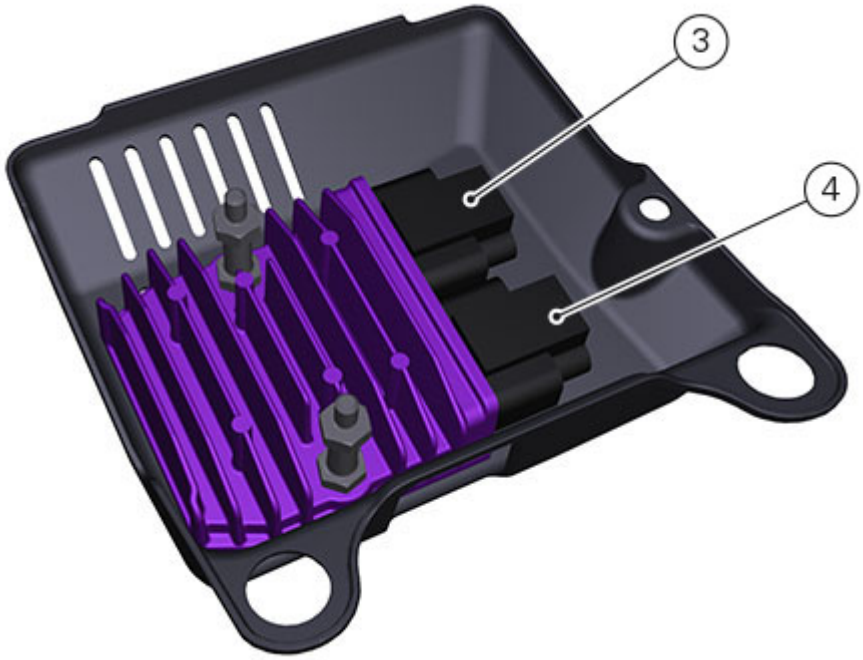

Route wirings as specified in chapter "Routing of wiring on frame".
Fit the battery (Battery).
Tighten the two screws (1) to a torque of 5Nm±10% and the screw (2) to a torque of 3 Nm ± 10%.

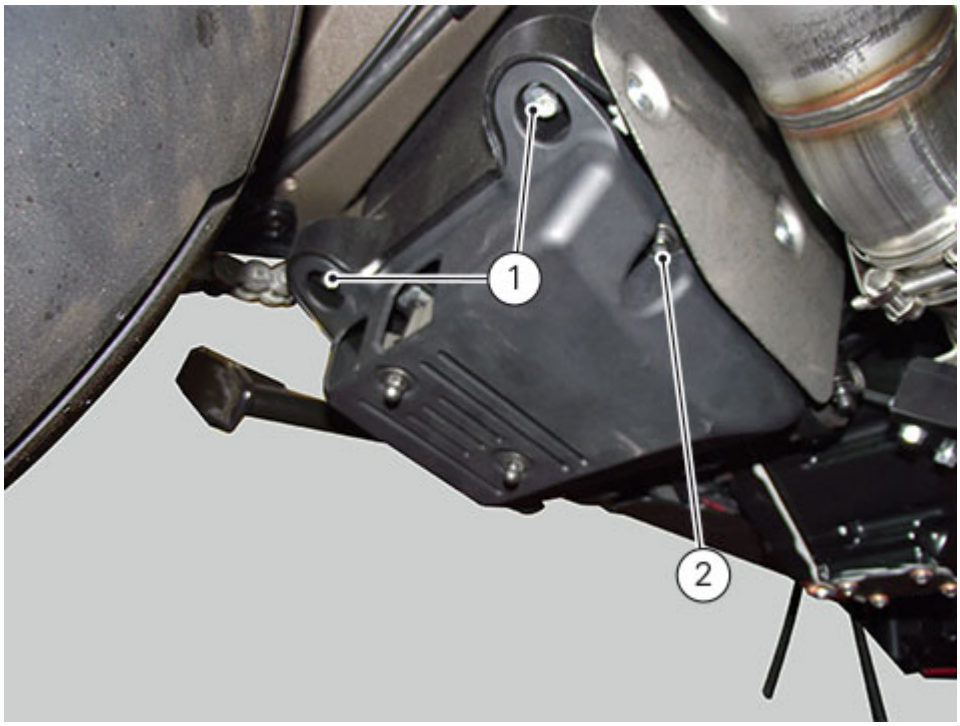
1
2

Removing the electric components compartment

Loosen the two screws (1).
Loosen screw (2) and collect lower spacer.

Warning
Hold wiring support while loosening screws since it opens and battery might thus slide down.

Remove the battery (Battery).

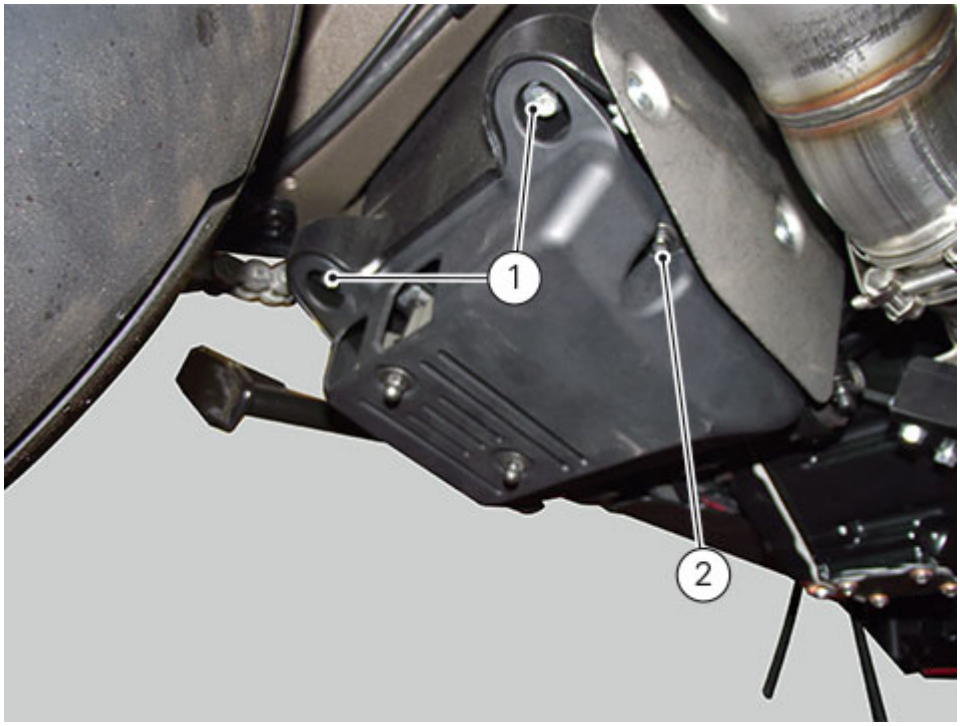

Disconnect the voltage regulator connector (3) and the generator connector (4).



Working on the opposite side, loosen the two fastening screws (5) and remove regulator (6), collecting spacers (26).

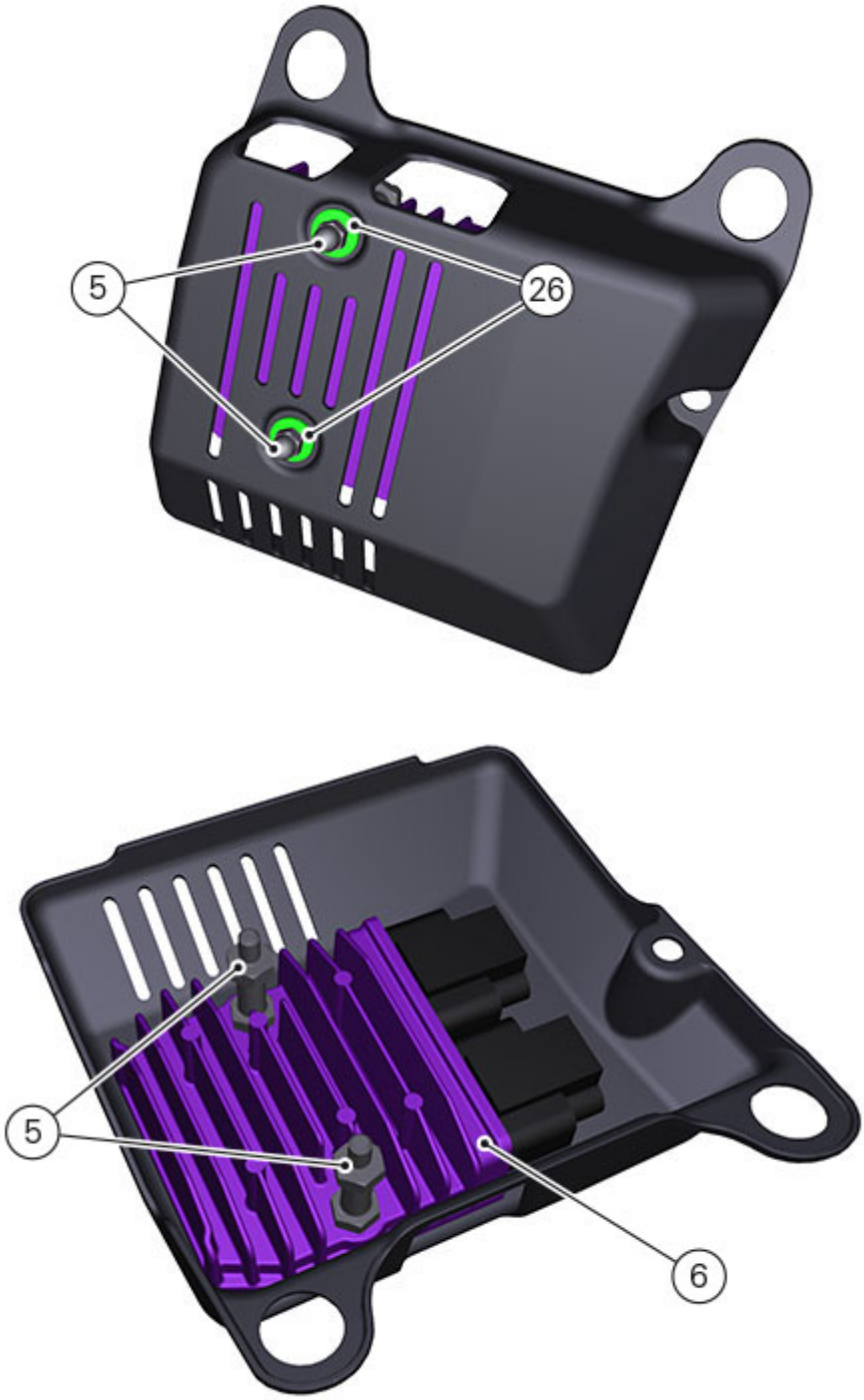

Loosen the two fastening screws (7) on cover (8) protecting the solenoid starter and the two ABS fuses.

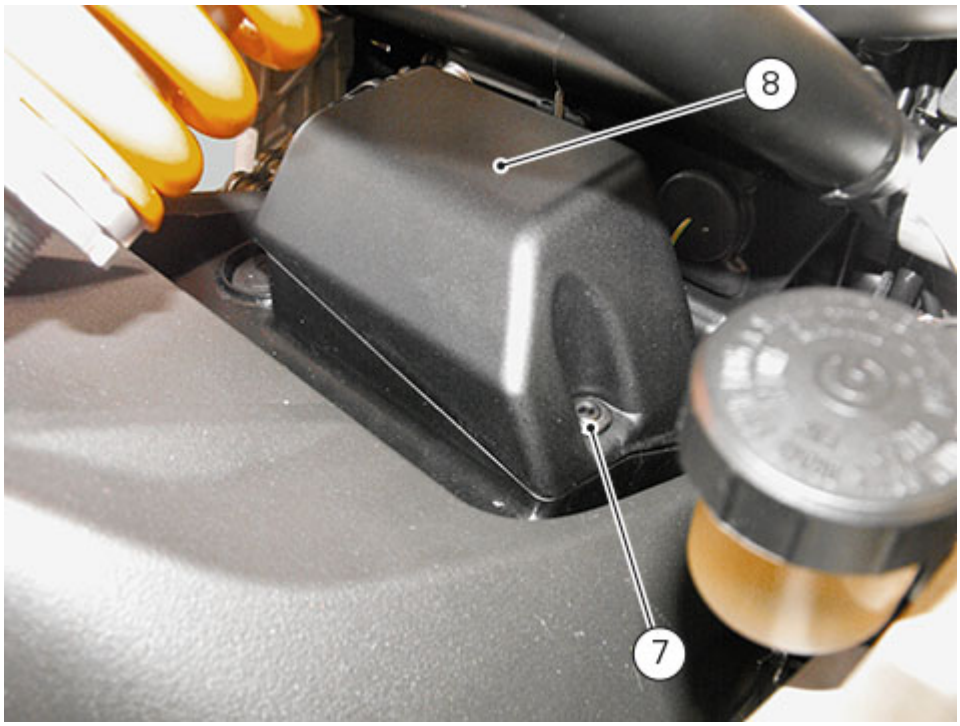

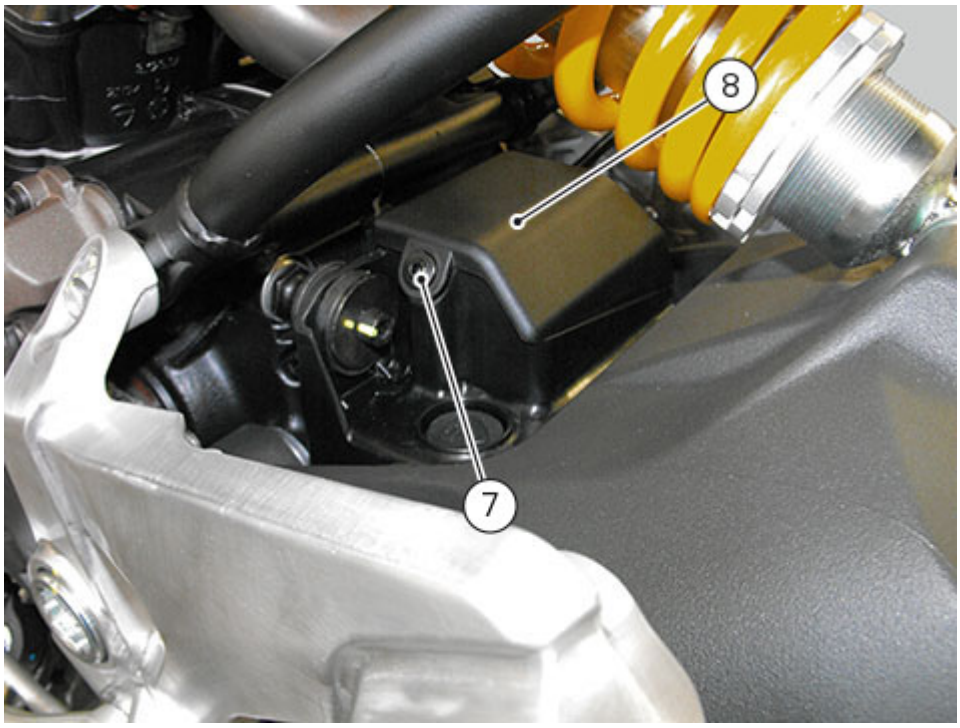

Disconnect the regulator connector (9).

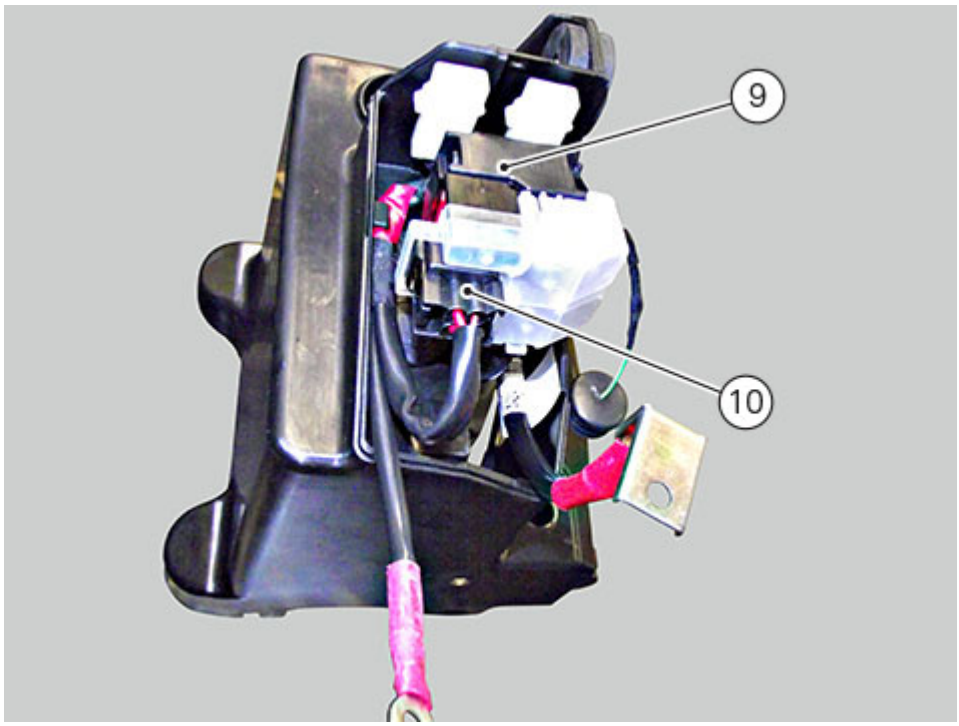

Remove the solenoid starter (10) by pulling it up and releasing it from fasteners (11).

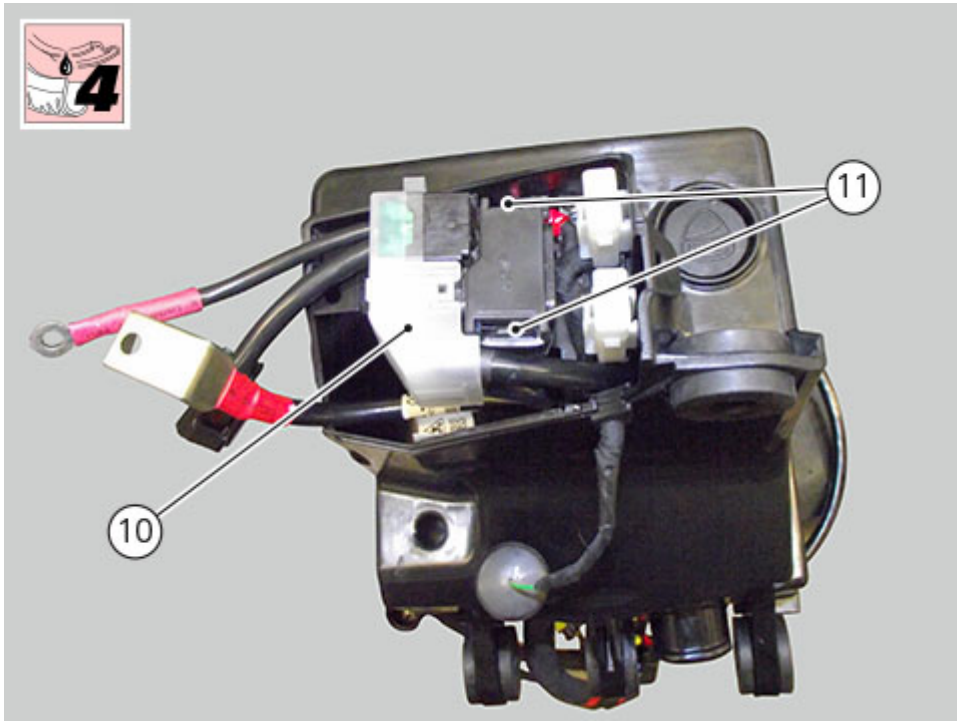

If necessary, remove the two ABS fuses (12).

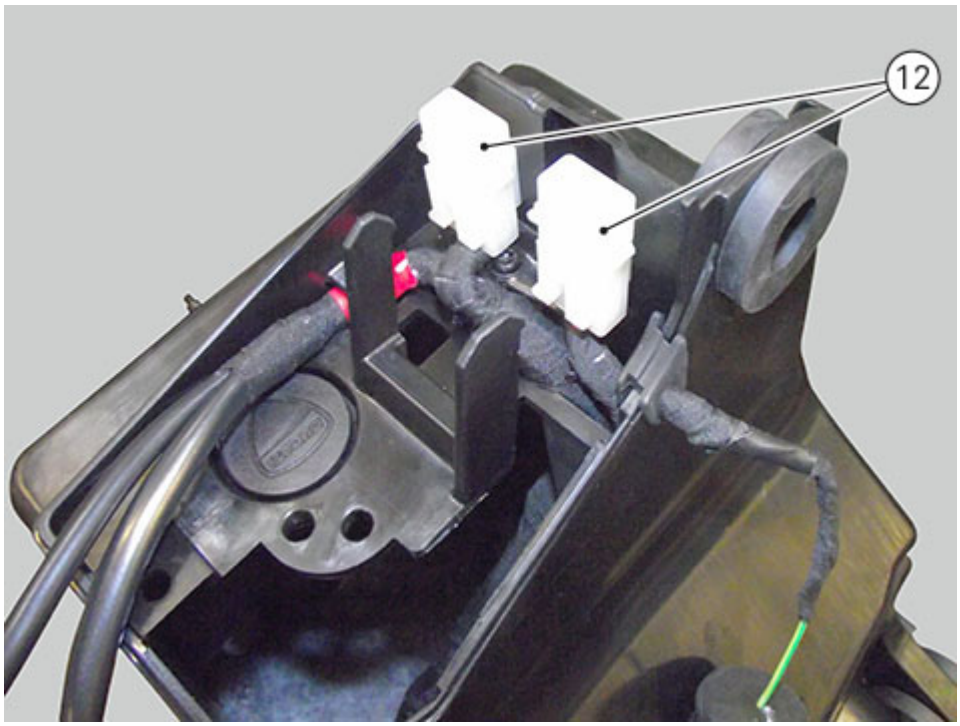

Disconnect connector (13) of the exhaust valve motor (14).

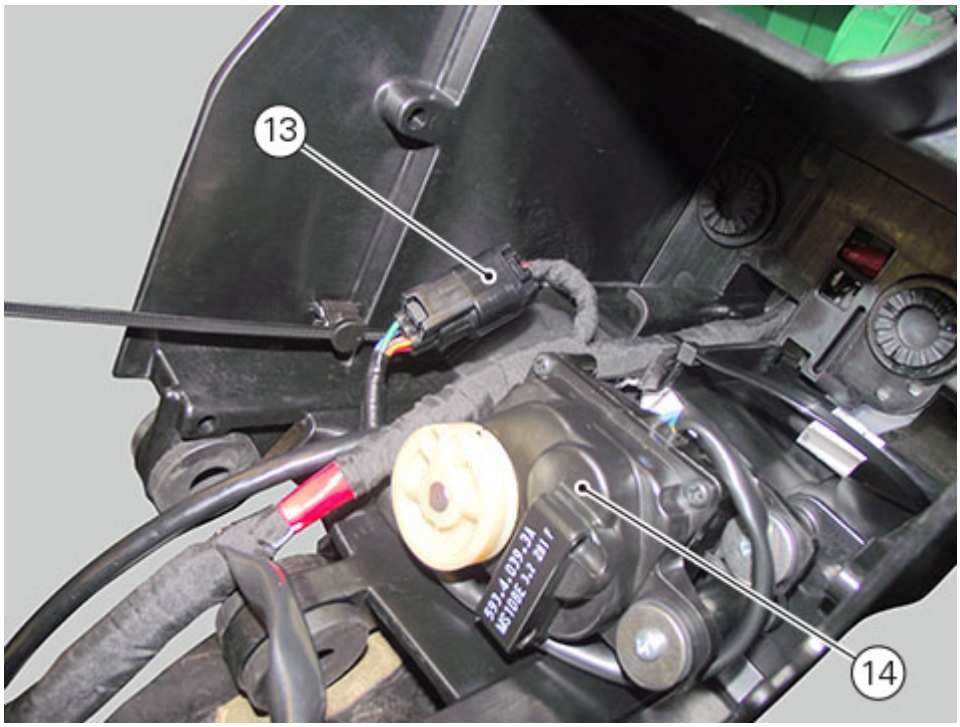

Remove the exhaust valve (Removing the exhaust valve).
Loosen the screws (15) and remove the exhaust valve motor.

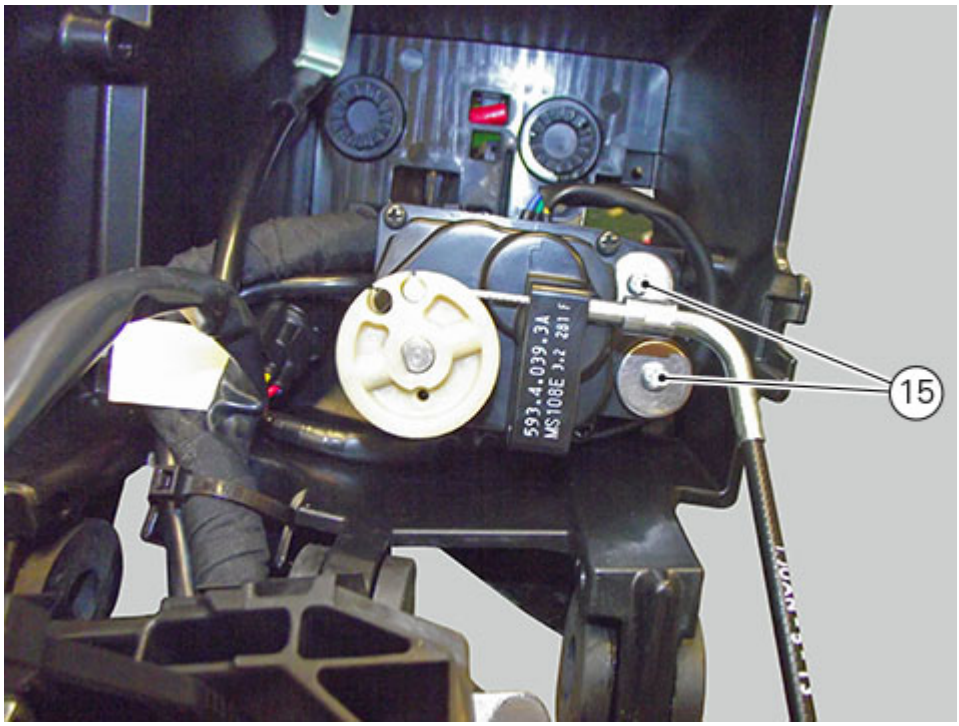
15

Refitting the fuel tank

Make sure that rubber block (A) is correctly positioned.

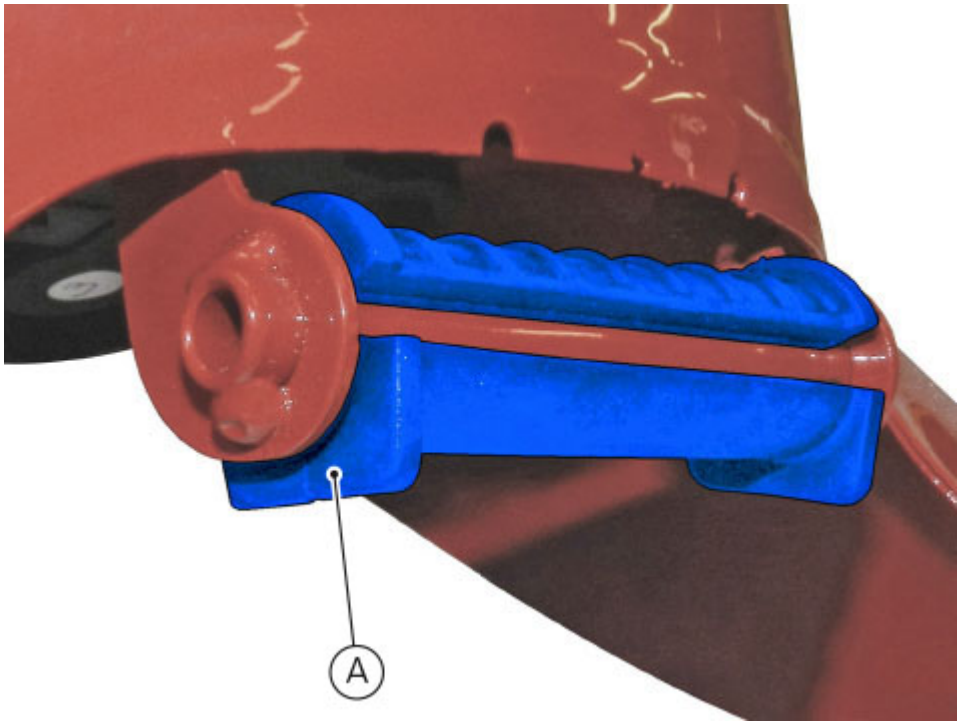

Position the tank.

Restore pump sensor (7), quick-release coupling (8) and ground cable (9) connections.



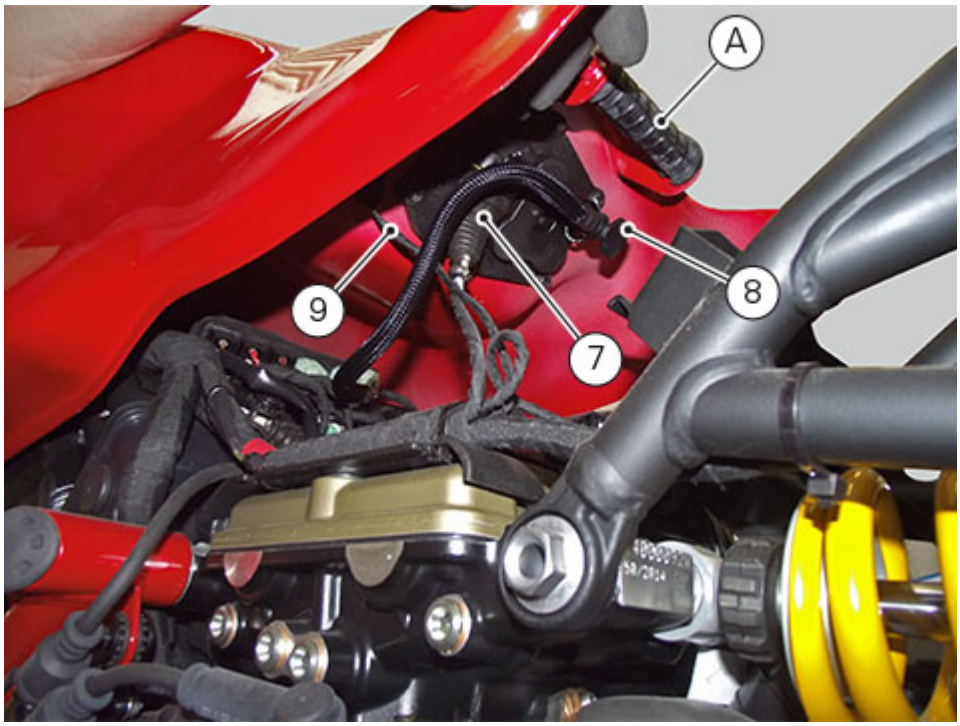

Connect the two canister pipes (2) and secure them to tanks using two clamps (1).

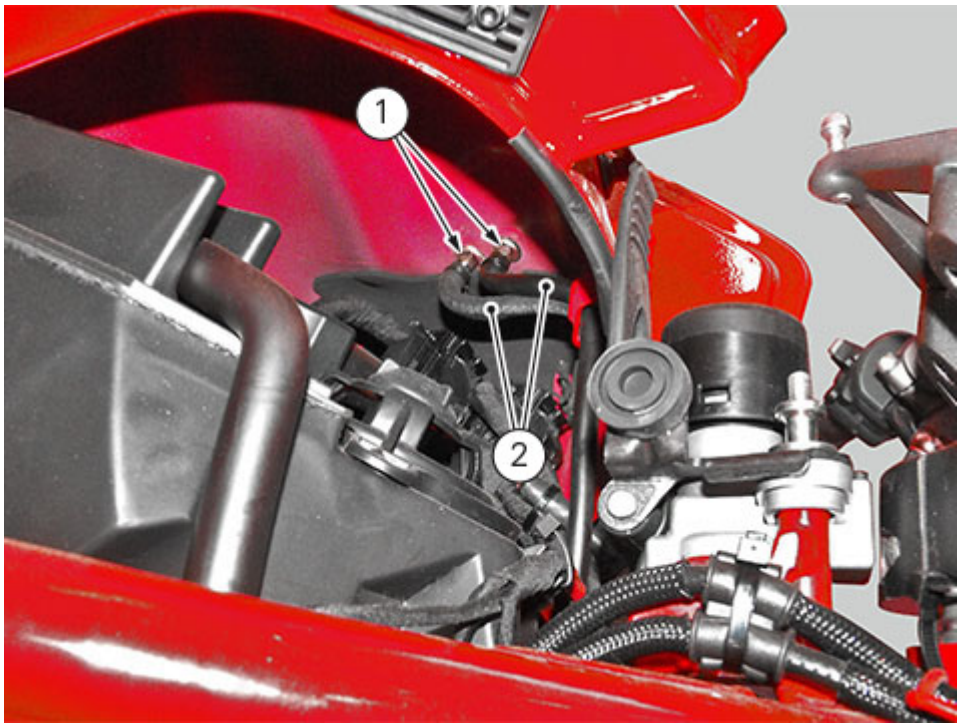

Close bracket (6) and tighten the screw (5) to a torque of 5Nm± 10 %.

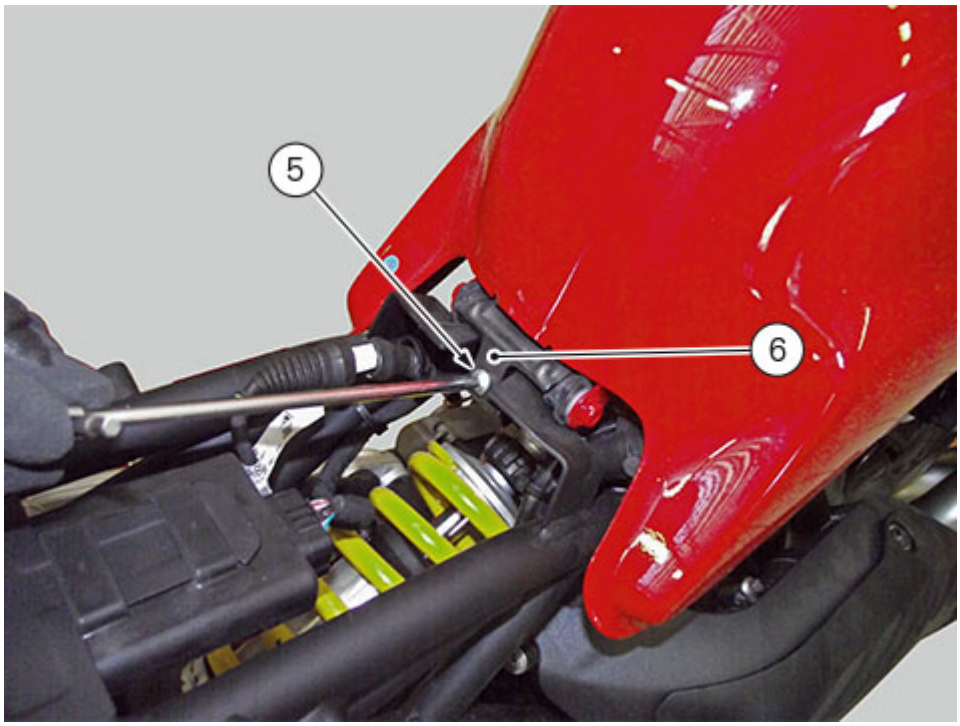

Engage elastic (3) on knob (4).

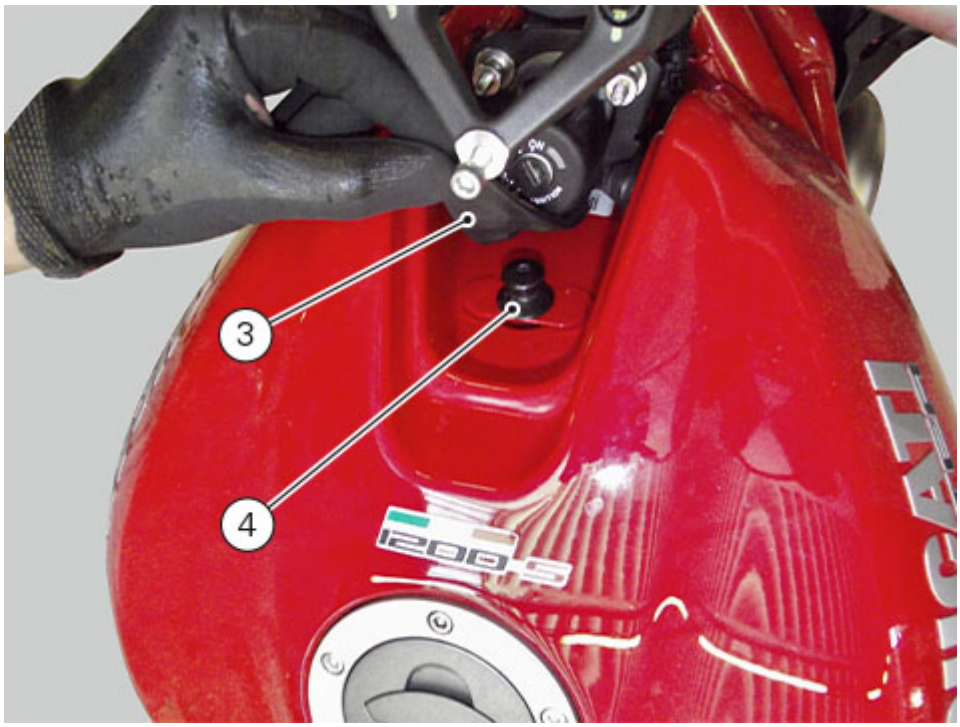

Refit the ignition switch (Refitting the ignition switch).
Refit the steering damper (Refitting the steering damper).
Refit the seat (Refitting the seat).

Refitting the fuel tank flange

If breather cap (5) has been previously removed, apply the specified product and bring it fully home in its seat.



Apply the recommended product to the thread and underhead of screws (1) and start them.

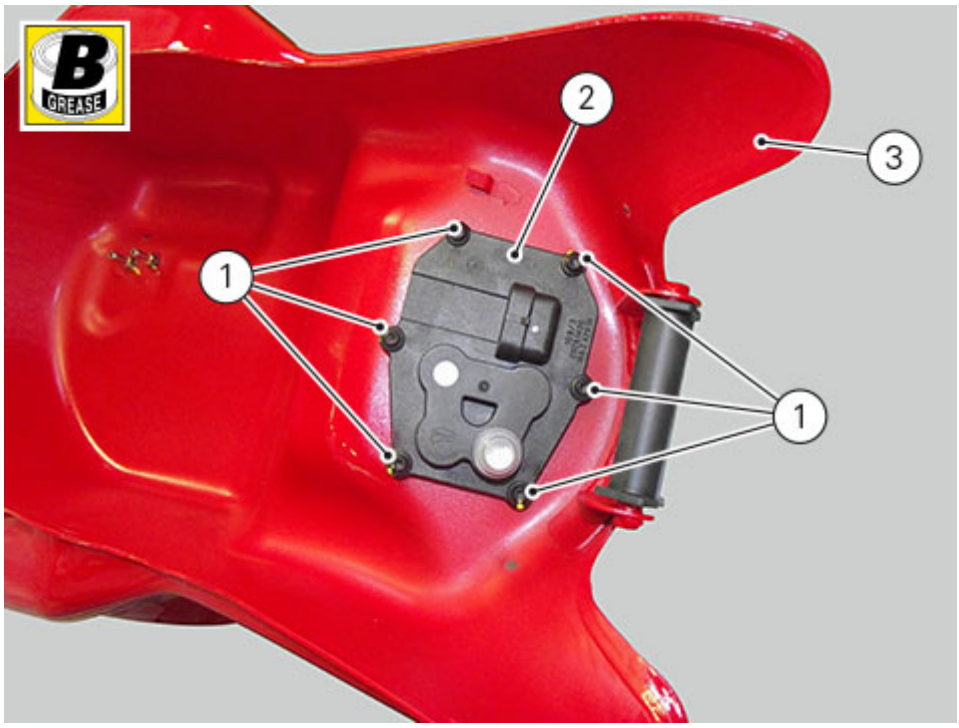

Tighten the screws (1) to a torque of 5Nm±10%, following the sequence shown in the figure.

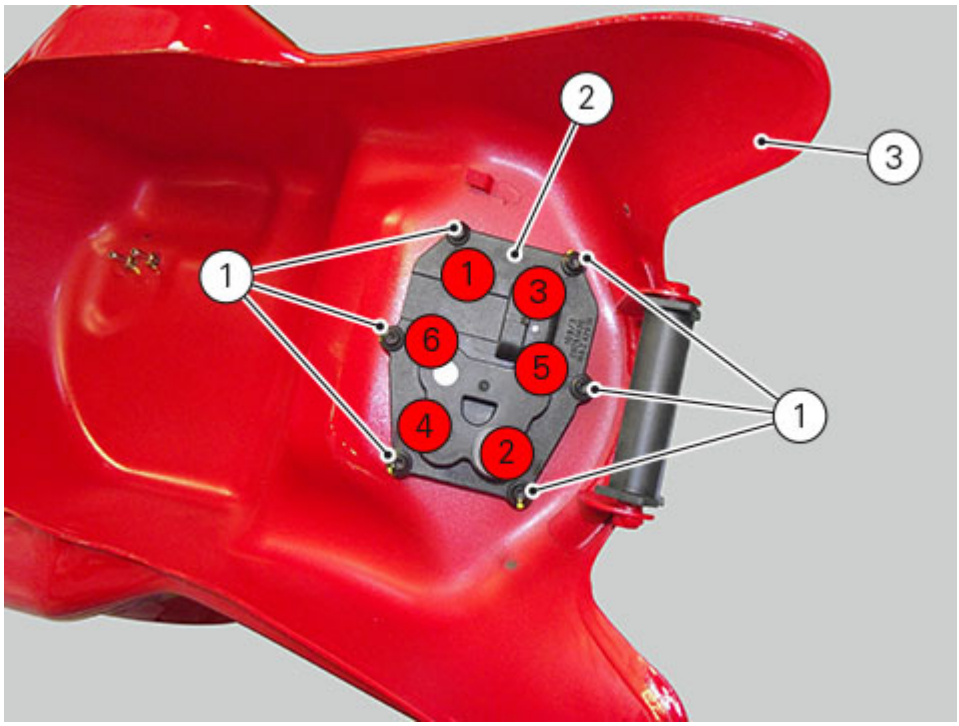

Refit the fuel tank (Refitting the fuel tank).
Refit the seat (Refitting the seat).

Removing the fuel tank flange

Remove the seat (Removing the seat).
Remove the fuel tank (Removing the fuel tank).

Loosen the six retaining screws (1) of tank flange (3).

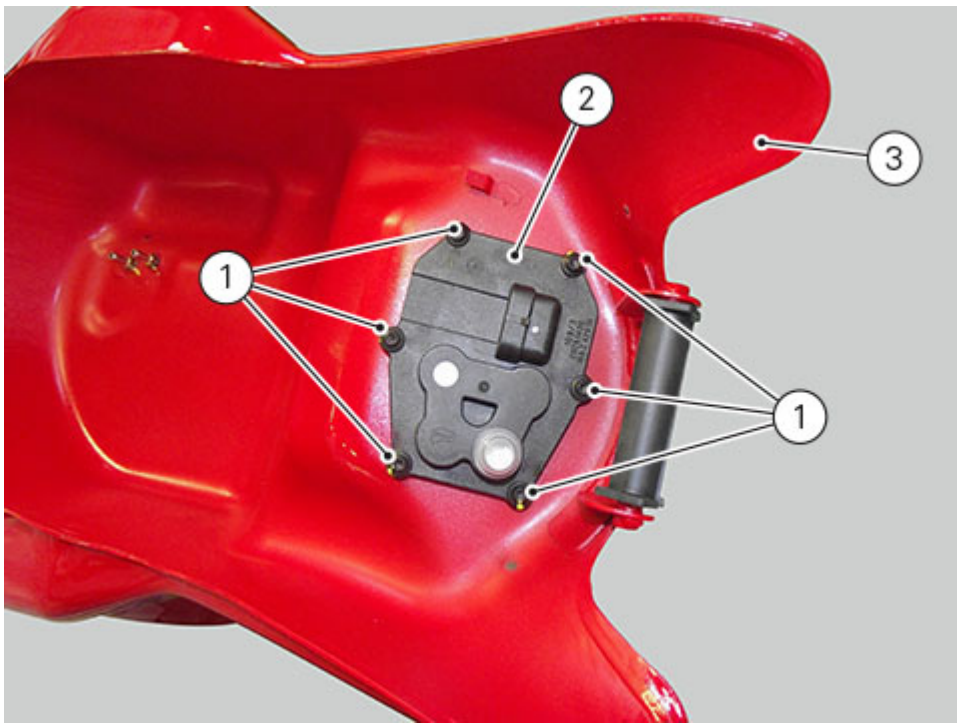

Slide fuel pump (2) out of tank (3) and collect gasket (4).

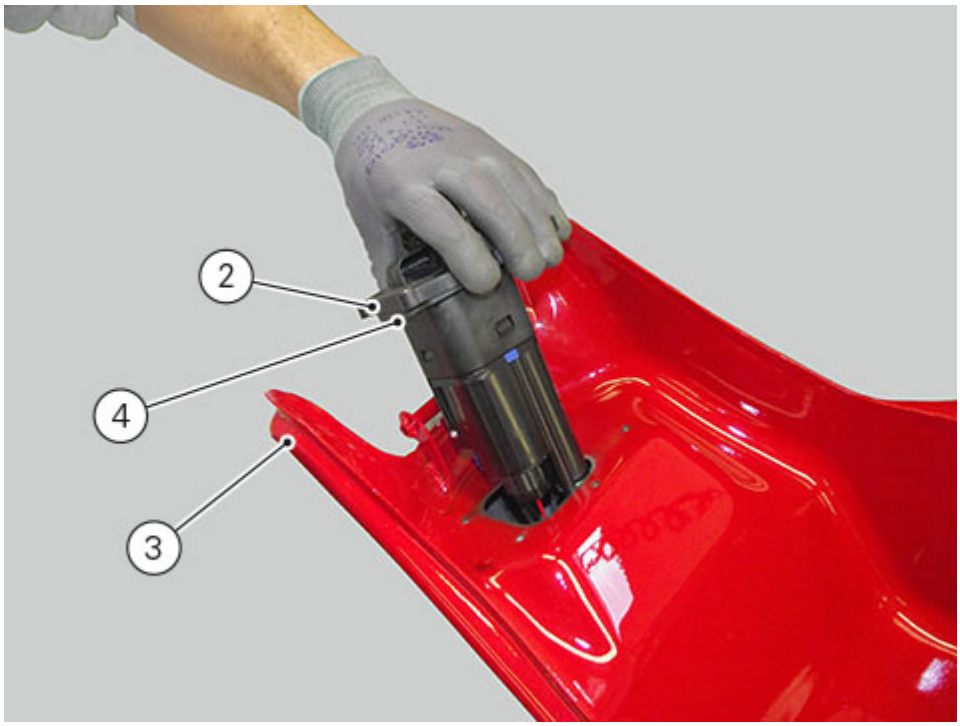

Before refitting, carefully remove any deposits or scale from all parts.

Refitting the tank filler plug

Place tank filler plug (3) and tighten the internal screw (2) to a torque of 4Nm±10%.

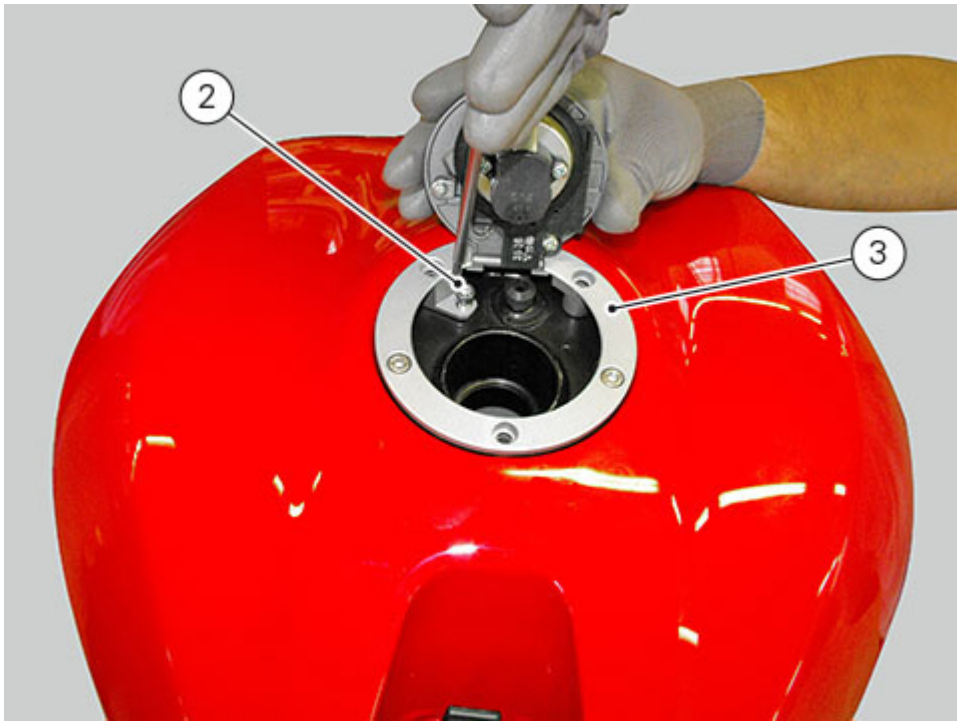

Tighten the plug three retaining screws (1) to a torque of 4Nm±10%.

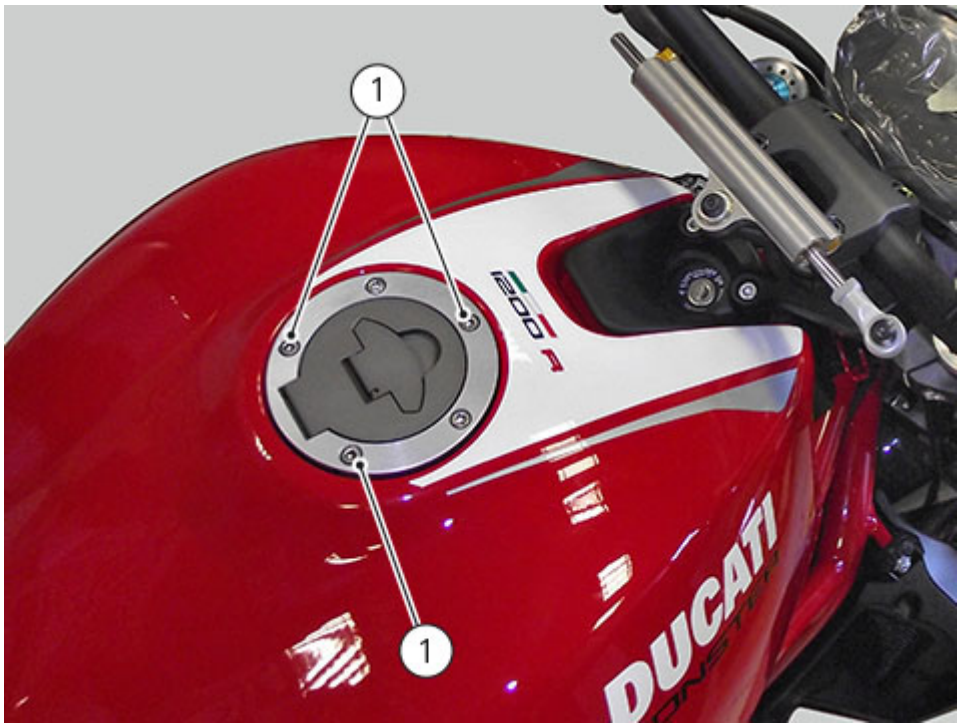

Removing the tank filler plug

Loosen and remove the plug three securing screws (1).

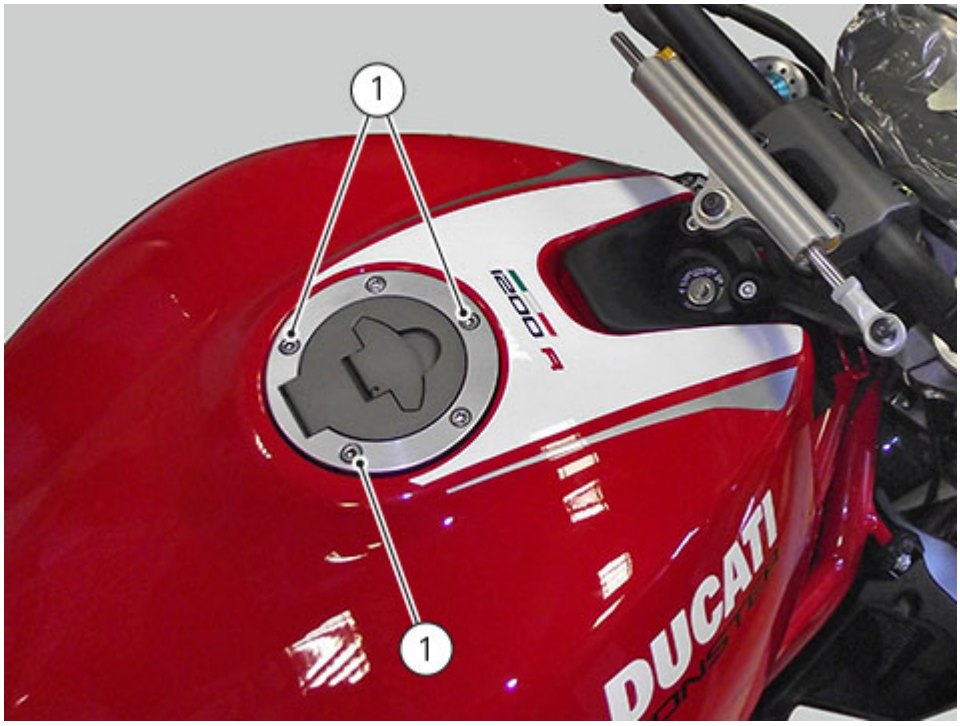

Open the tank plug.
Loosen and remove the inner screw (2) and remove tank filler plug (3).

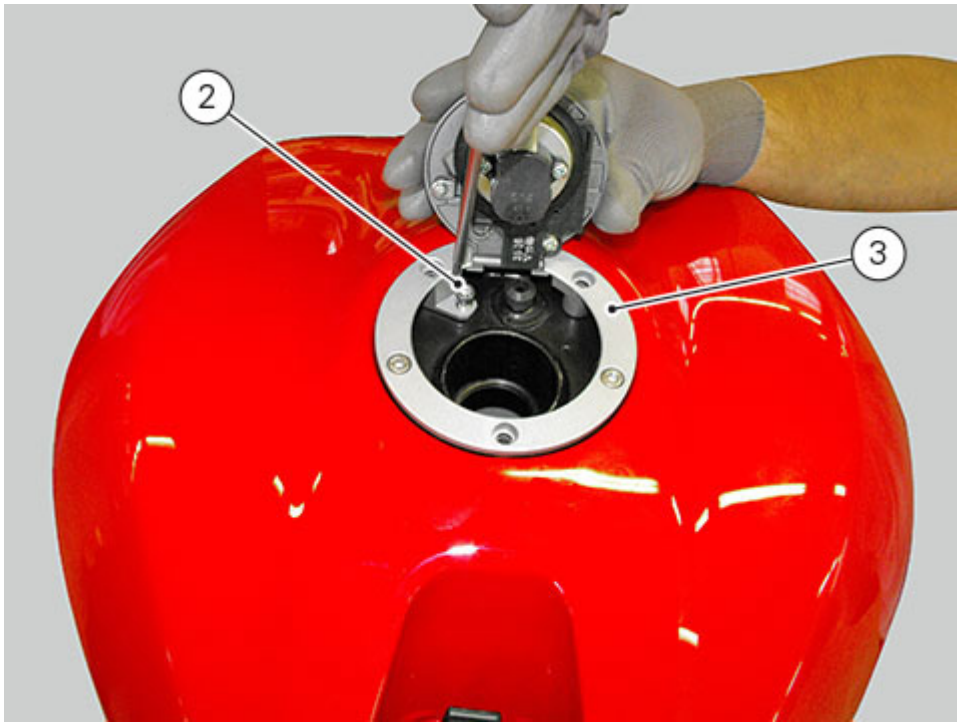

Removing the fuel tank

Remove the steering damper (Removing the steering damper).
Remove the ignition switch (Removing the ignition switch).
Remove the seat (Removing the seat).

Slide elastic (3) out of knob (4).

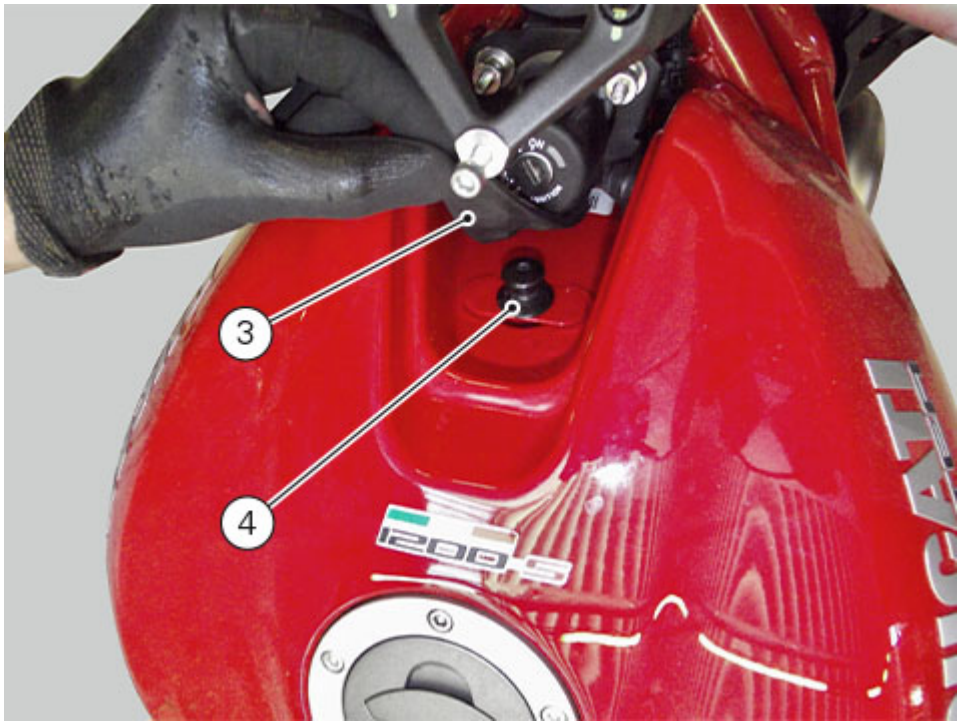

Remove screw (5) and slide tank retaining flange (6) out together with rubber pad (A).

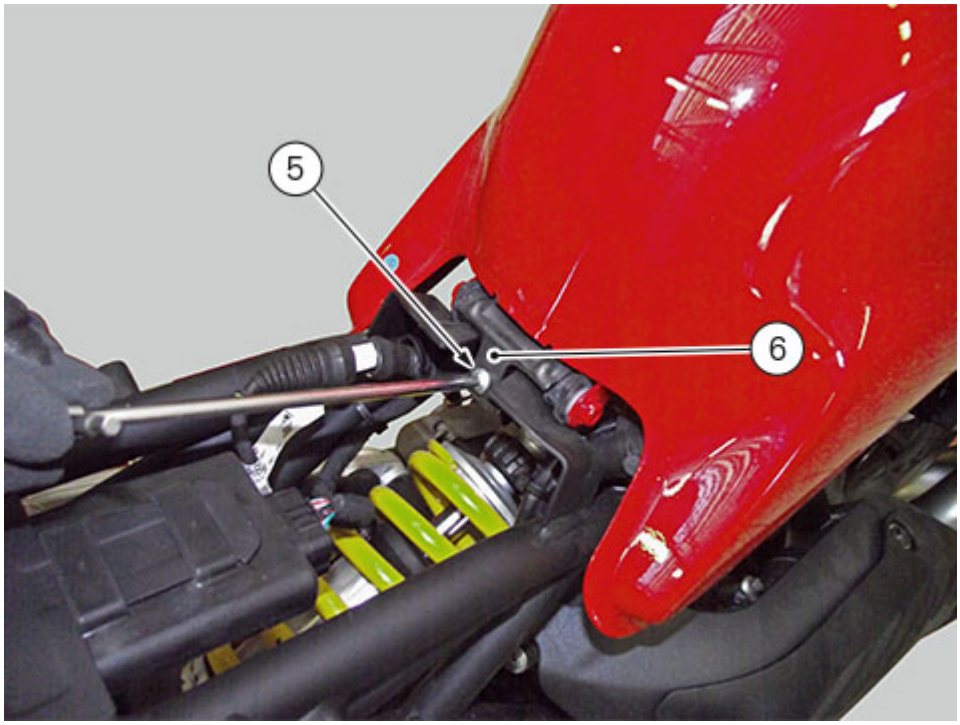

Lift the tank and disconnect the pump connector (7), the quick-release coupling (8) and the ground cable (9) from the flange.

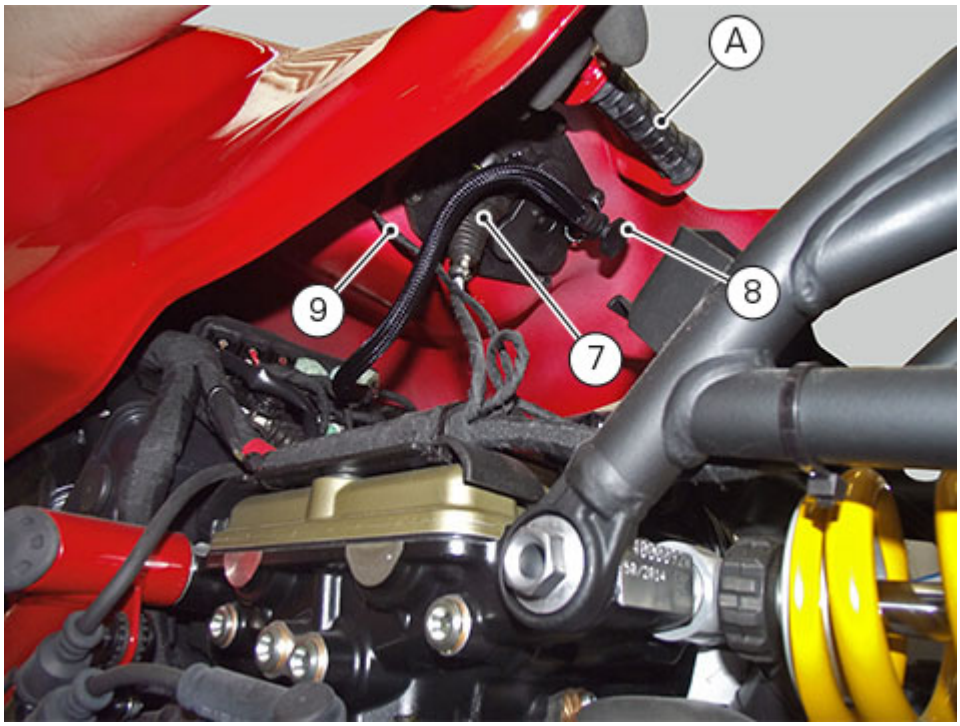

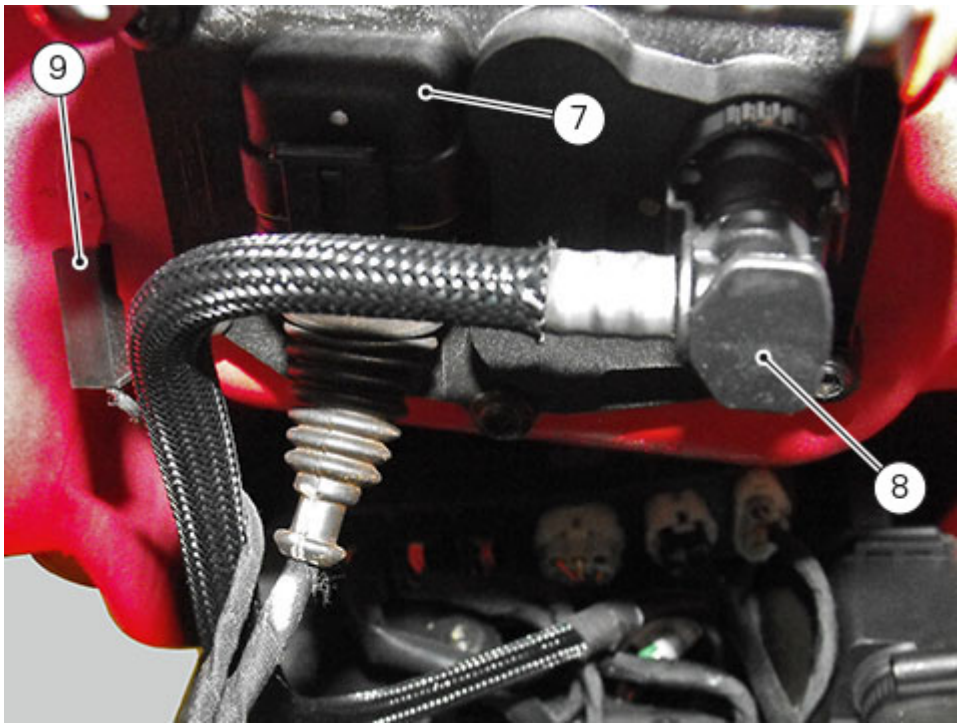

Slide out the two ties (1) and remove the two canister hoses (2).

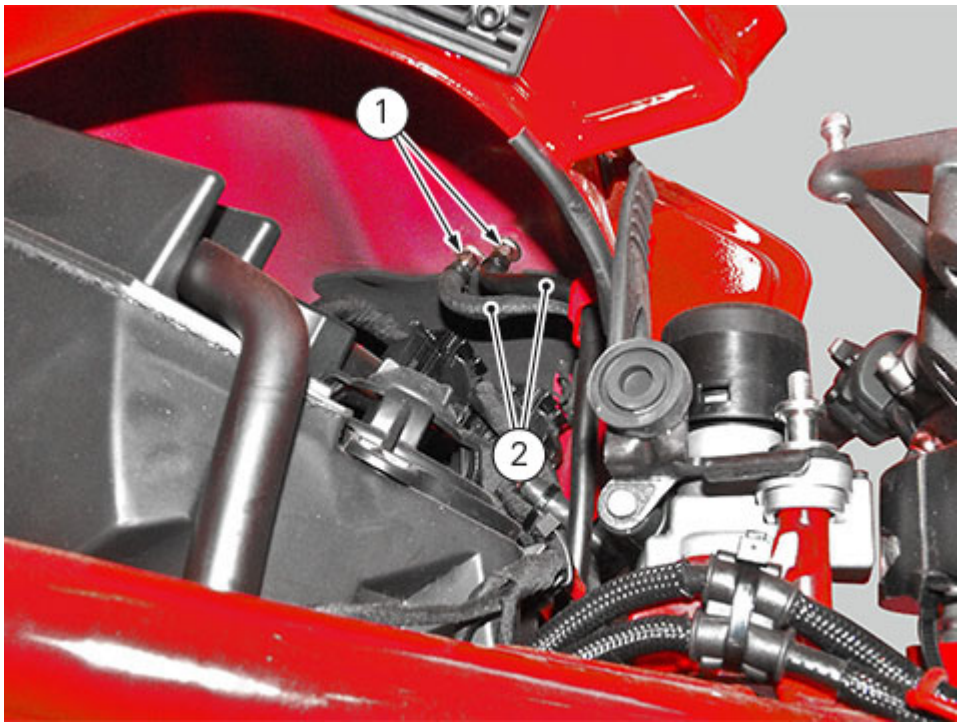

Remove the fuel tank.

Refitting the airbox and throttle body

REFITTING THE THROTTLE BODY

IF previously removed, refit the following components.
Position the MAP sensor assembly (8) as shown in the figure.
Tighten the two screws (9) to a torque of 6Nm±10%.

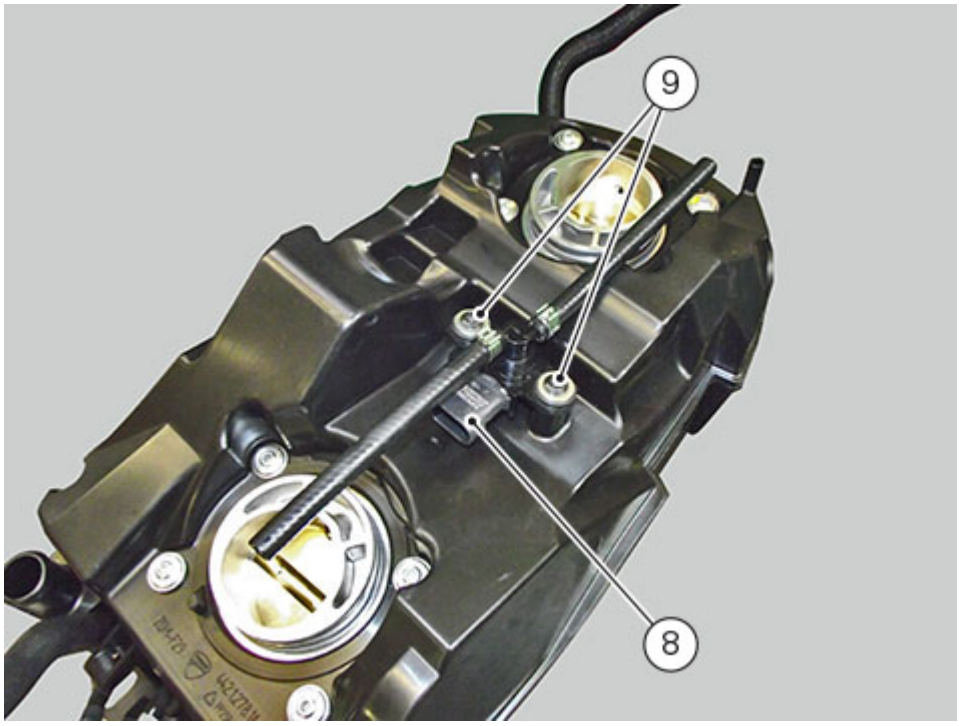

Position wiring (10) inside the airbox lower cover.
Connect connector (11) to potentiometer (12).

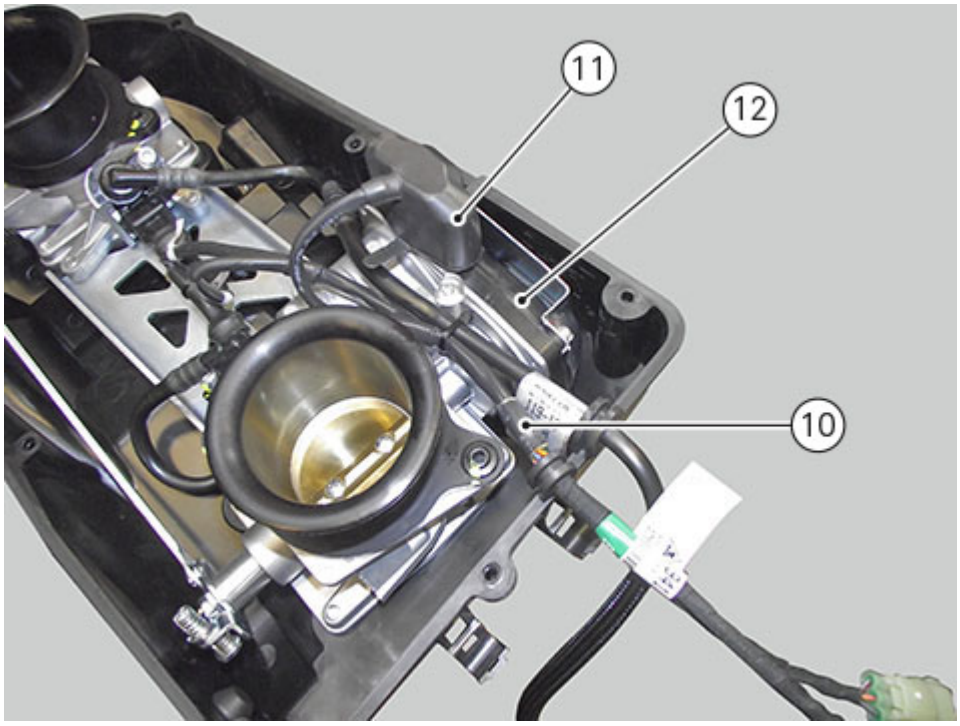

Connect the grey connector to horizontal injector (13) and the black one to vertical injector (14).

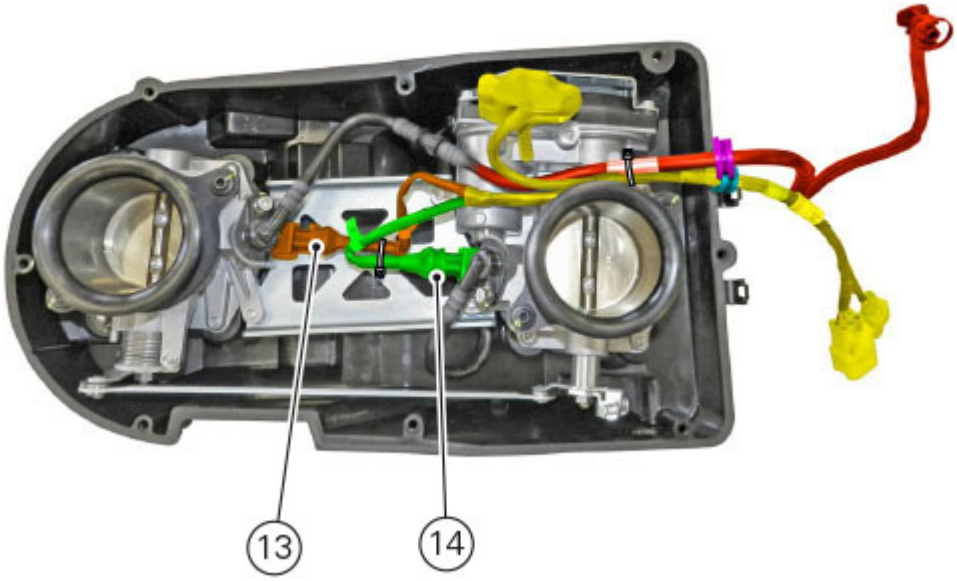

Fit the two gaskets (15) on the two intake funnels (16).

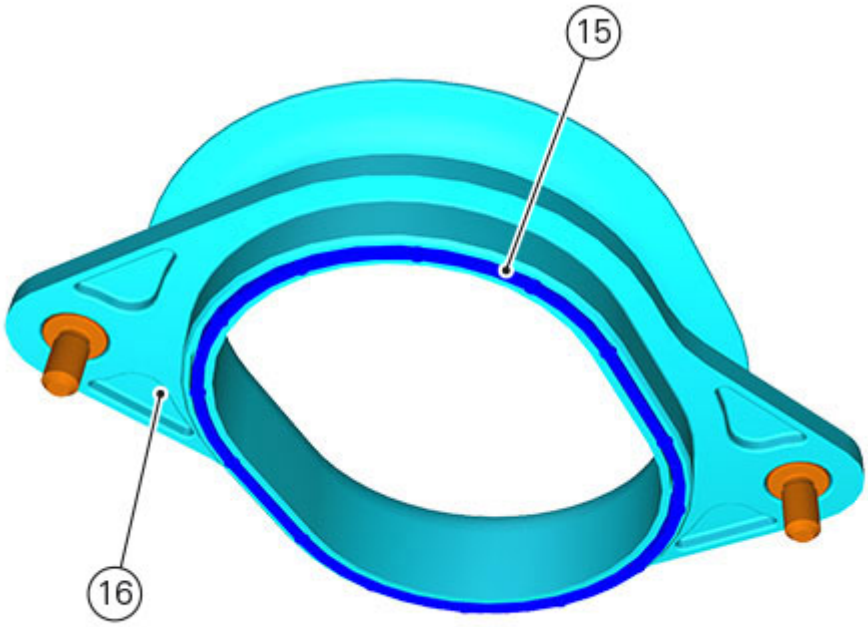

Position the two intake funnels (16) on the throttle body and fix them by tightening the four screws (17) to a torque of 5Nm±10%.
If you do not use new screws (with pre-applied threadlocker), apply the specified threadlocker.

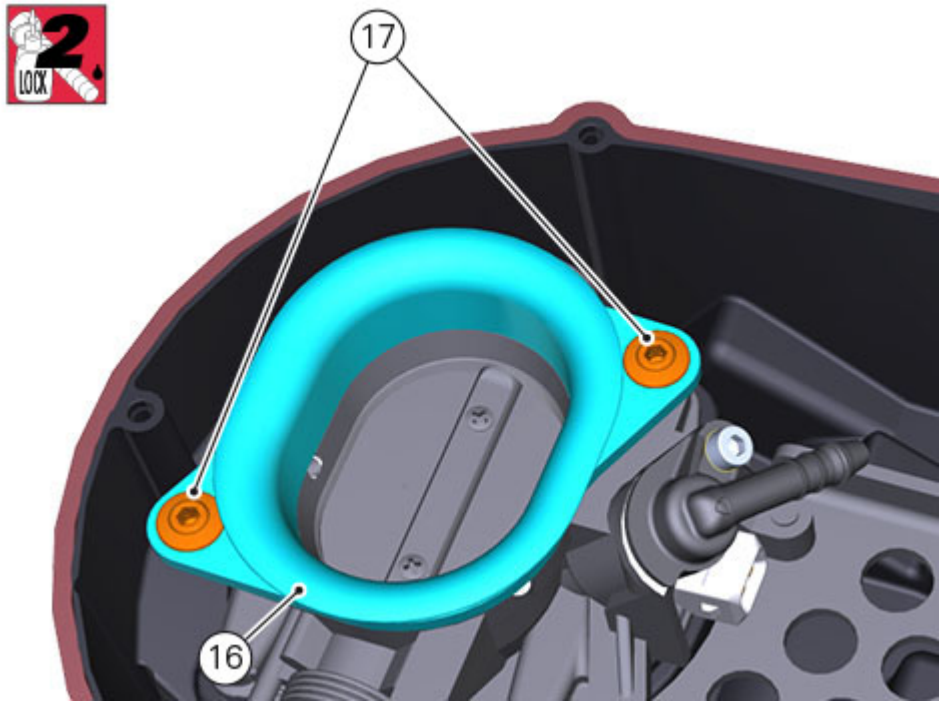

If previously removed, insert injectors (5) in their seats (A) and (B) on the intake manifolds having care not to damage O-ring (6) lubricated with the specified product.
Working on both injectors, tighten the screw (7) to a torque of 5Nm±10%.

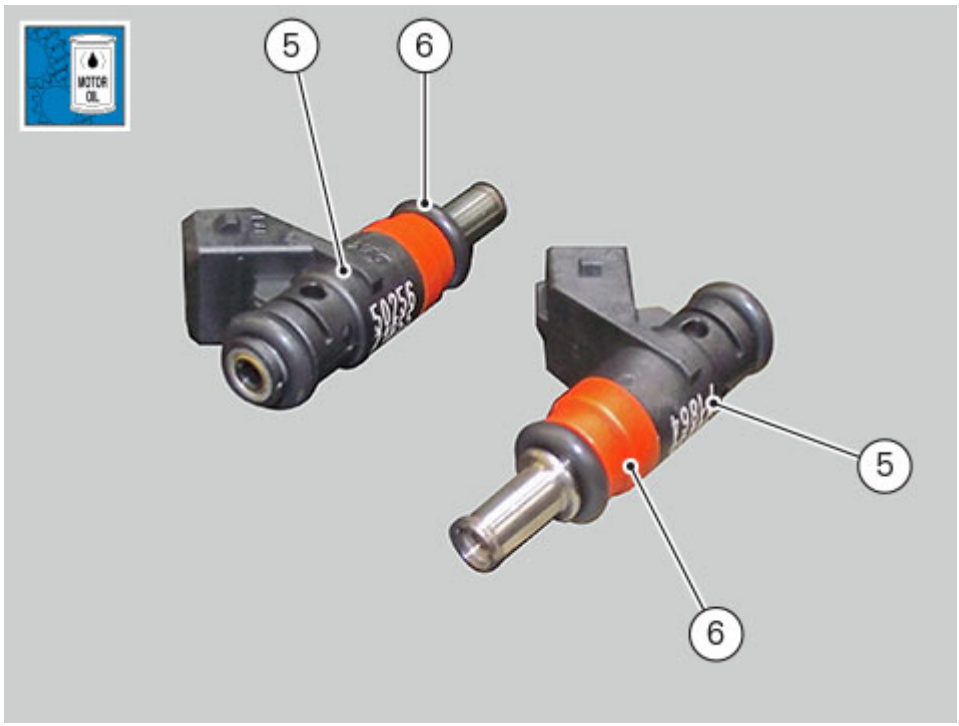

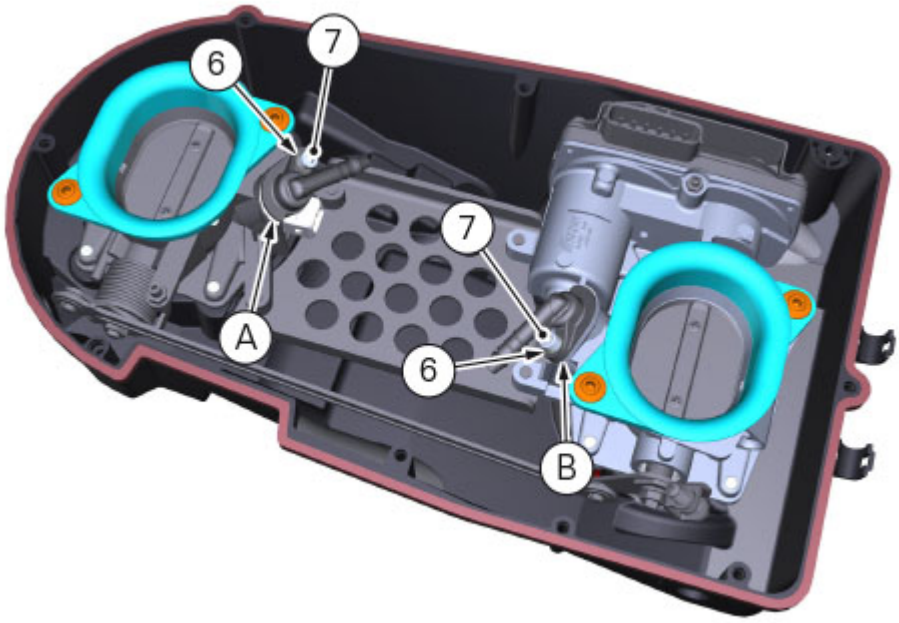

Tighten the eight screws (2) to a torque of 10Nm±10% to fasten throttle bodies (3) and (4).
Route the wiring as specified in chapter "Routing of wiring on frame".

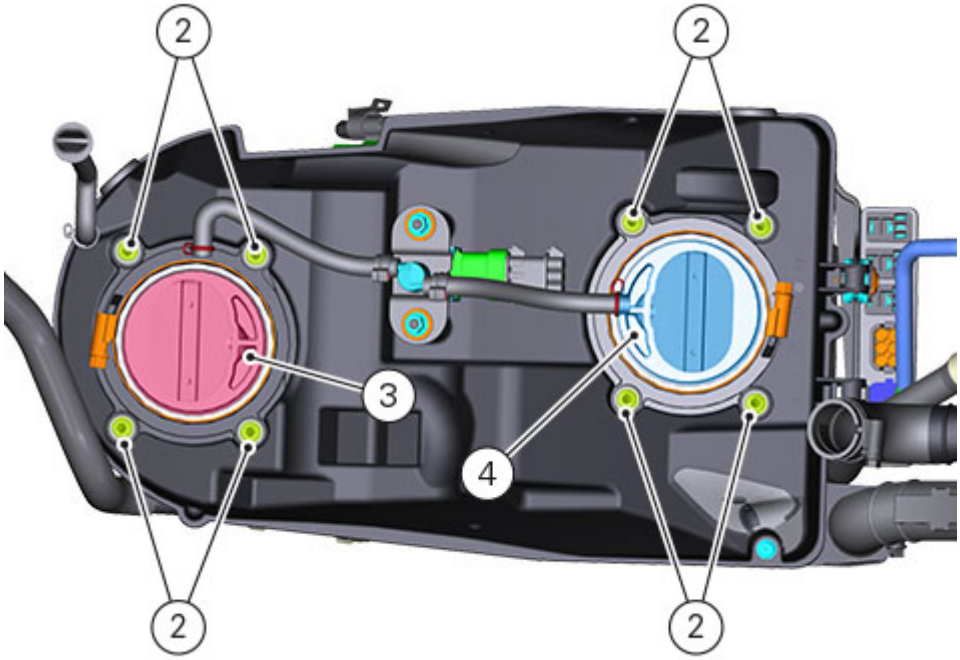

Check hose and wiring clamping and passage, as indicated in the figure.

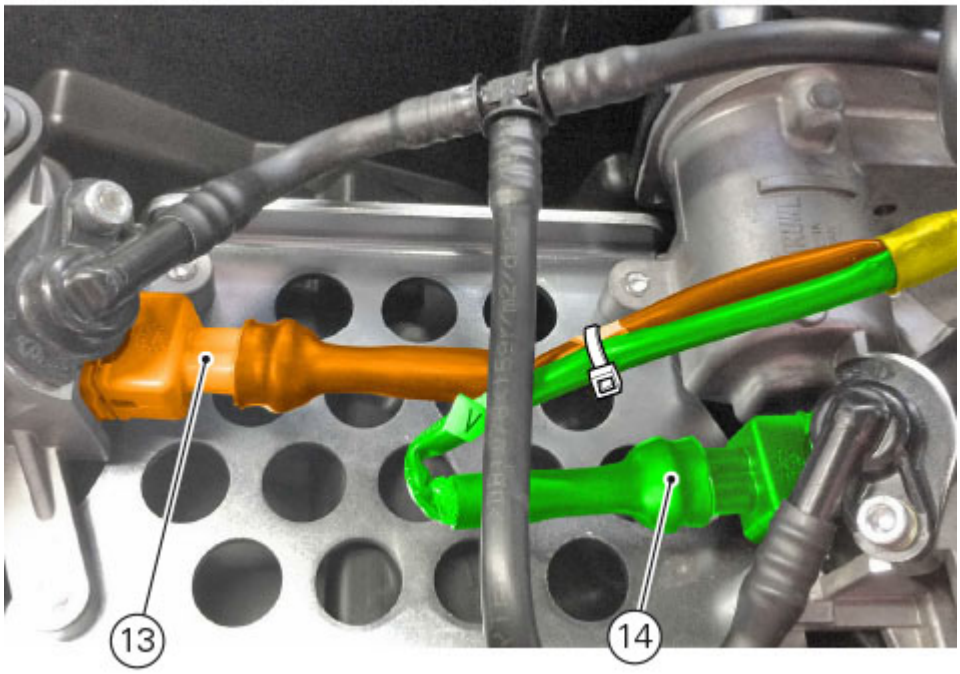

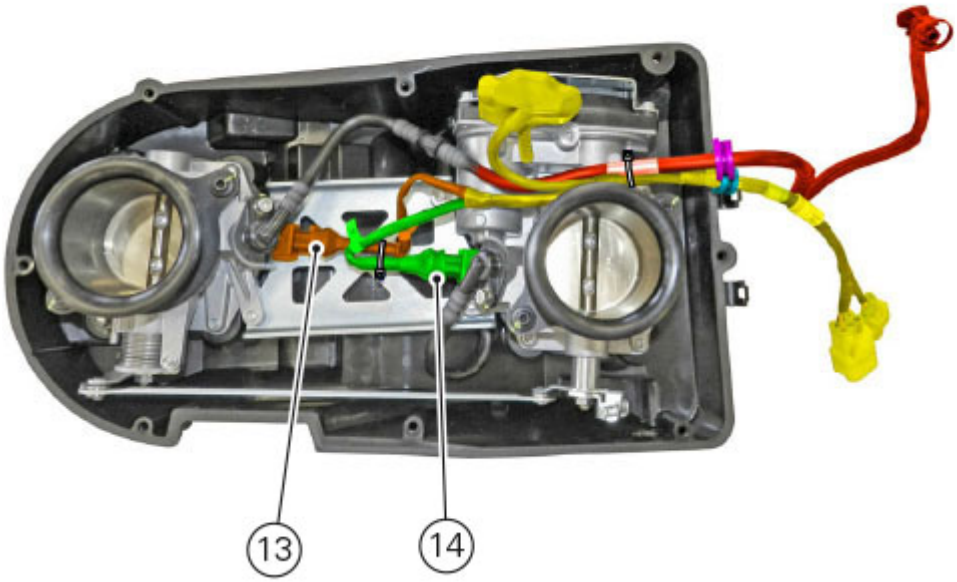

Position the airbox upper cover.
Position spacer (Y) inside the indicated hole and tighten the eight upper screws (1A) and lower screw (1B) (on airbox lower cover) to a torque of 3Nm±10%, following the indicated sequence.

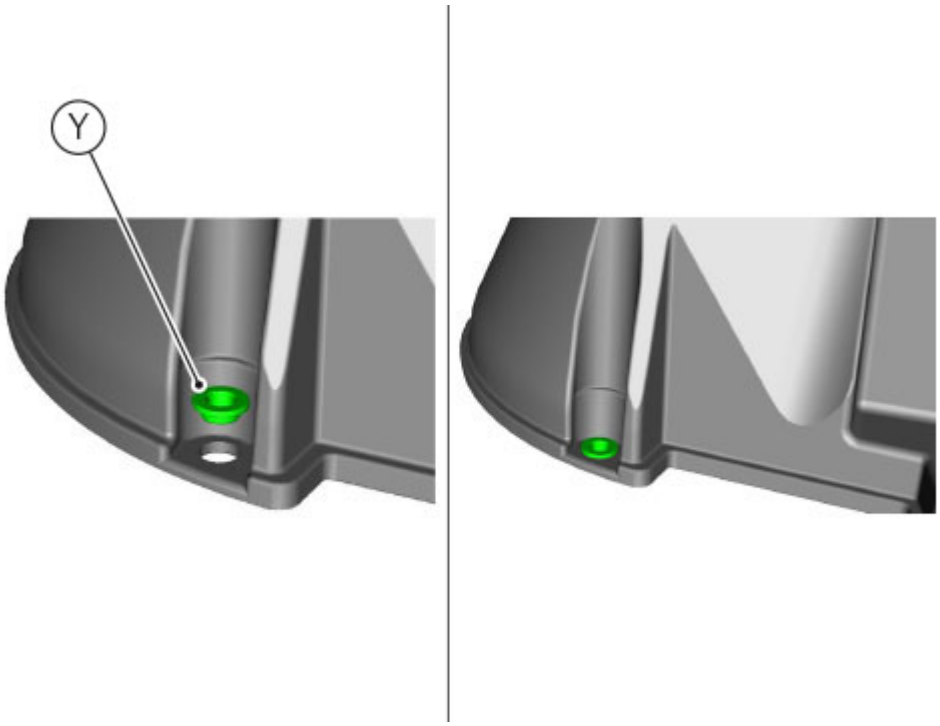
Y

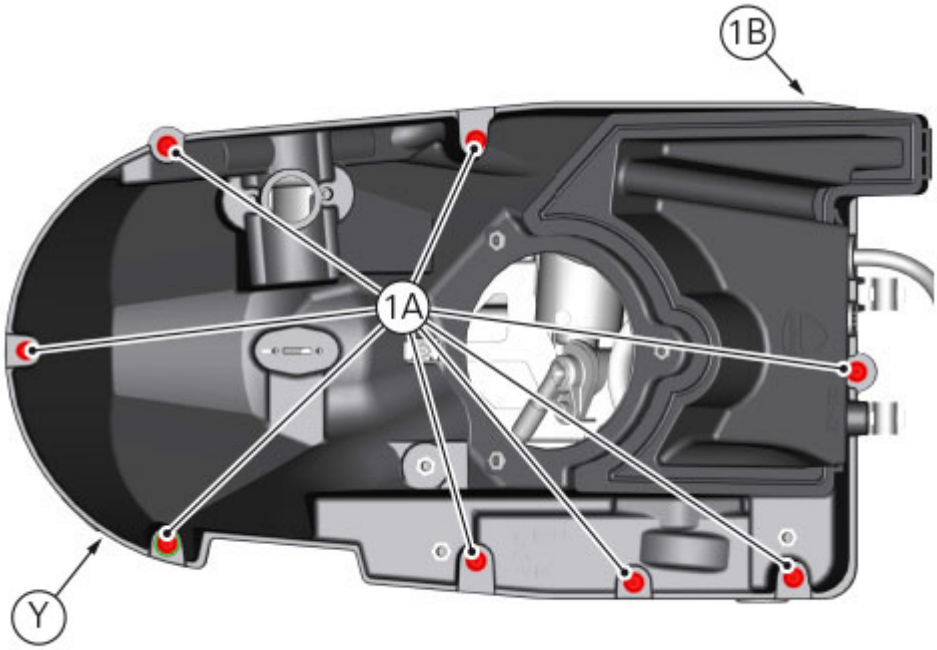
1B
1A
Y

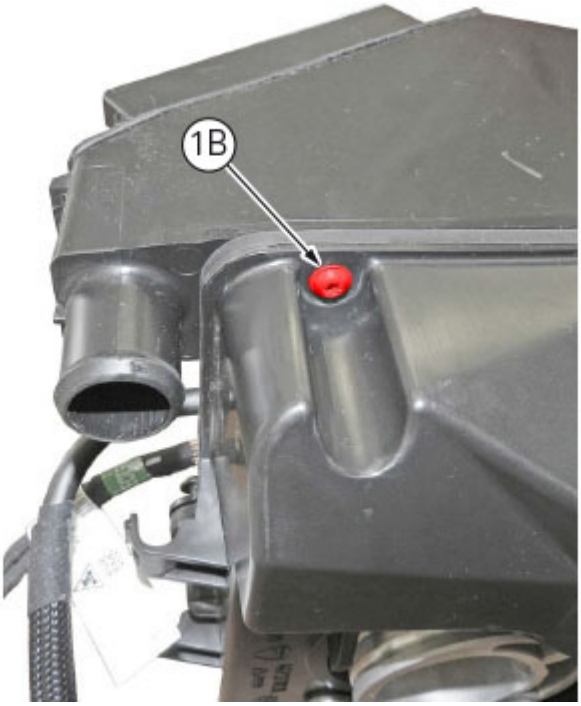

Complete the fitting procedure of the air filter.

Note
It is not necessary to reset the TPS values for the "fully closed" position. The ECU performs an automatic check upon each key-on.

REFITTING THE AIRBOX

Connect the two pipes of MAP sensor (18) to the vertical and horizontal cylinder and fix them with clamps (19) and (20).
Connect the connector (21).

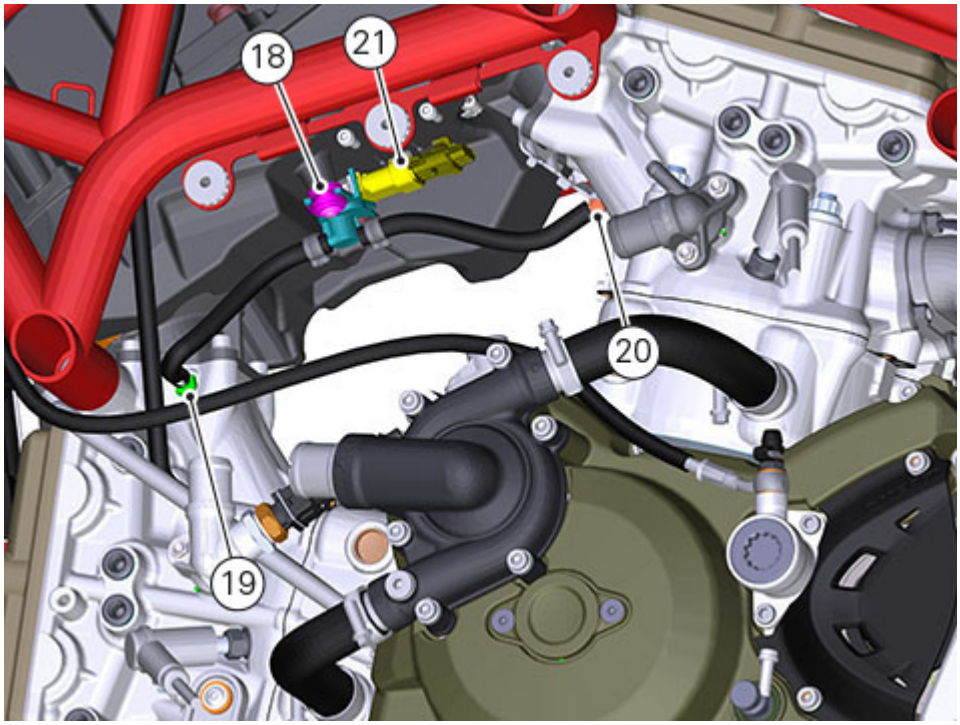

Working on the vertical cylinder, tighten clamp (17) that retains the air filter (12).

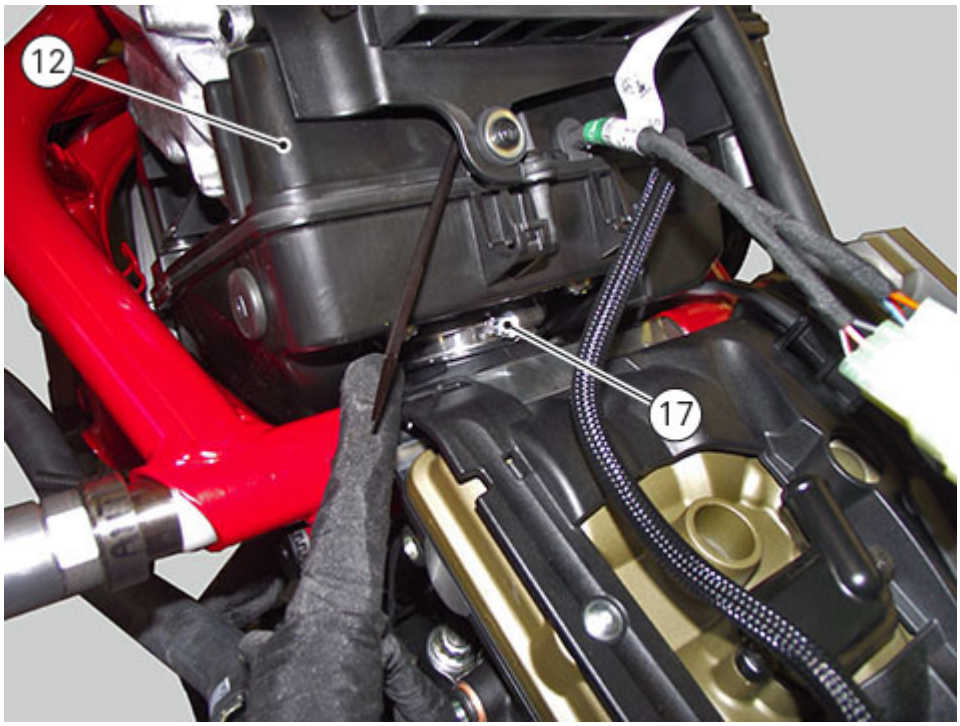

Working on the horizontal cylinder, tighten clamp (16) that retains the air filter (12).

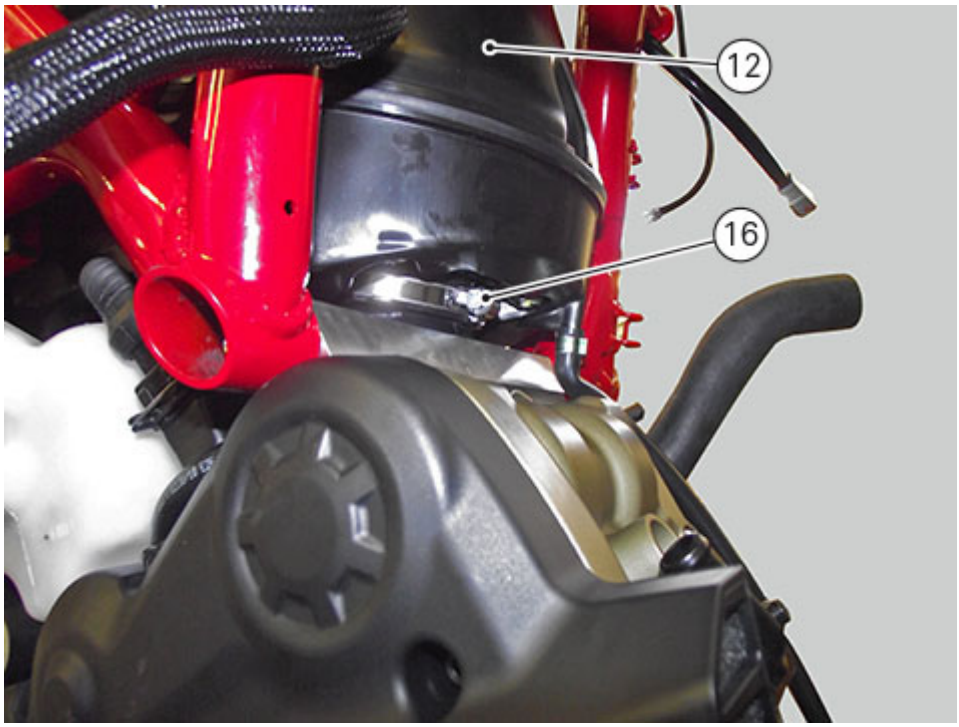

Connect the immobilizer antenna (14) and ignition switch (15) connectors.

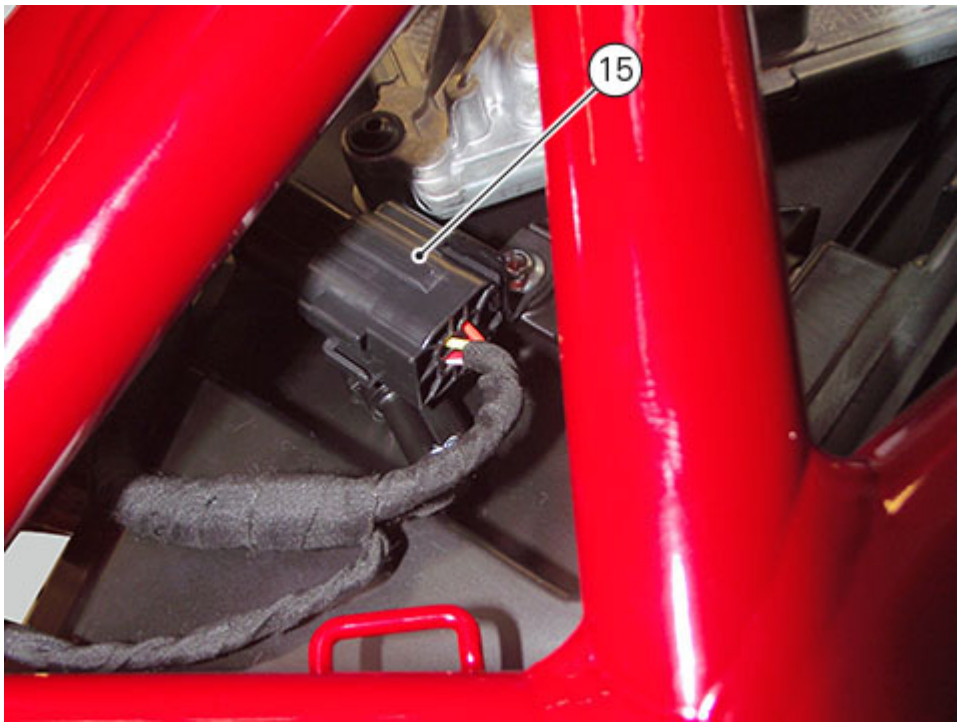
15

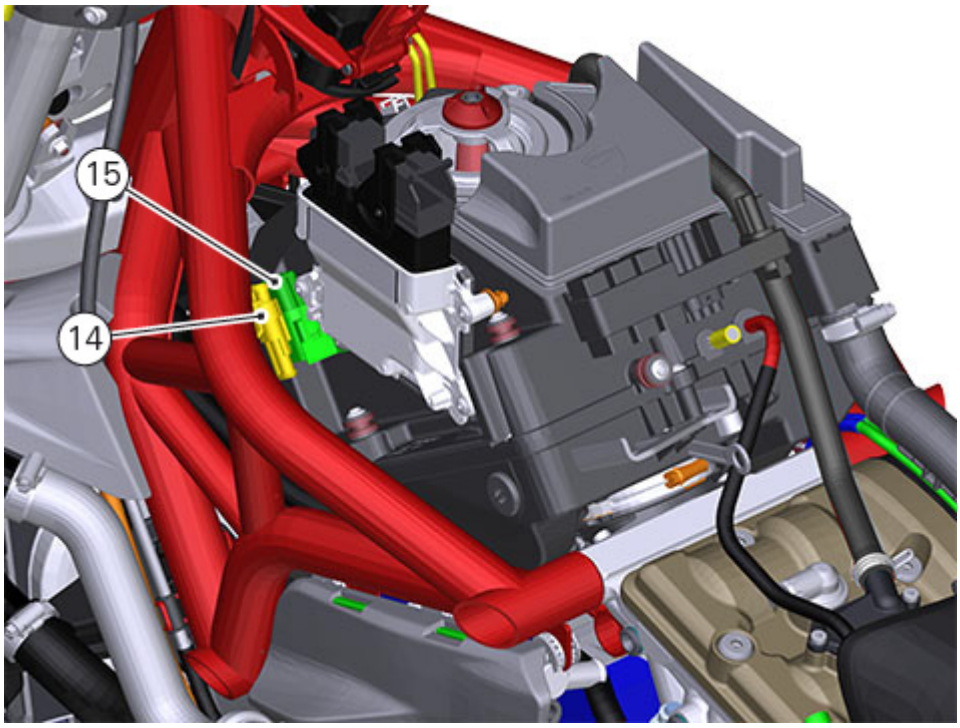
15
14

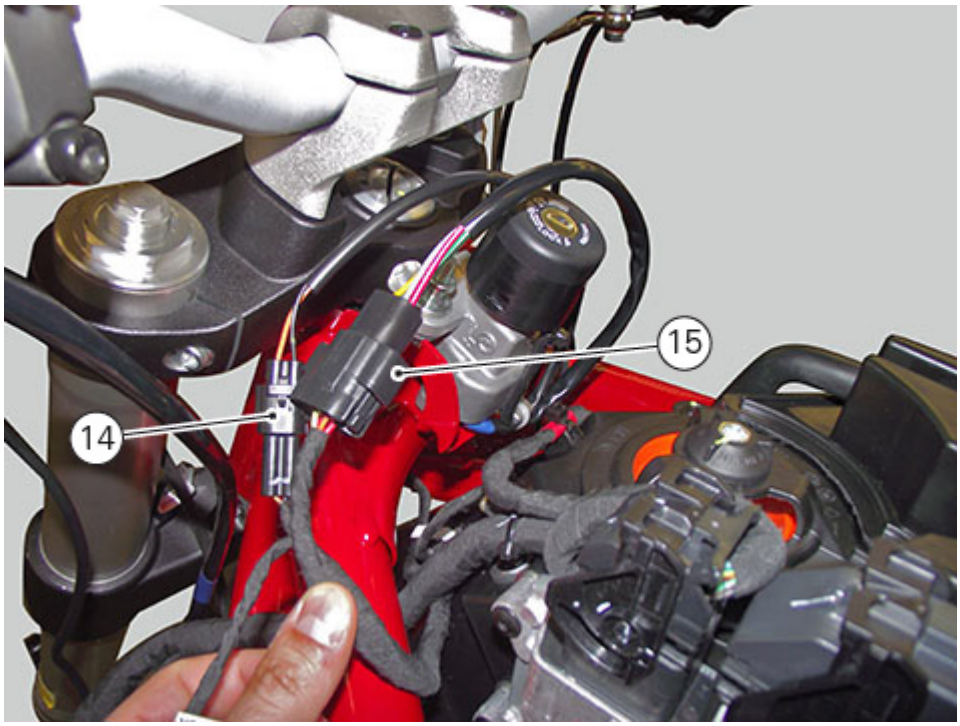

Working on the airbox (12) front side, connect the air temperature sensor connector (13).

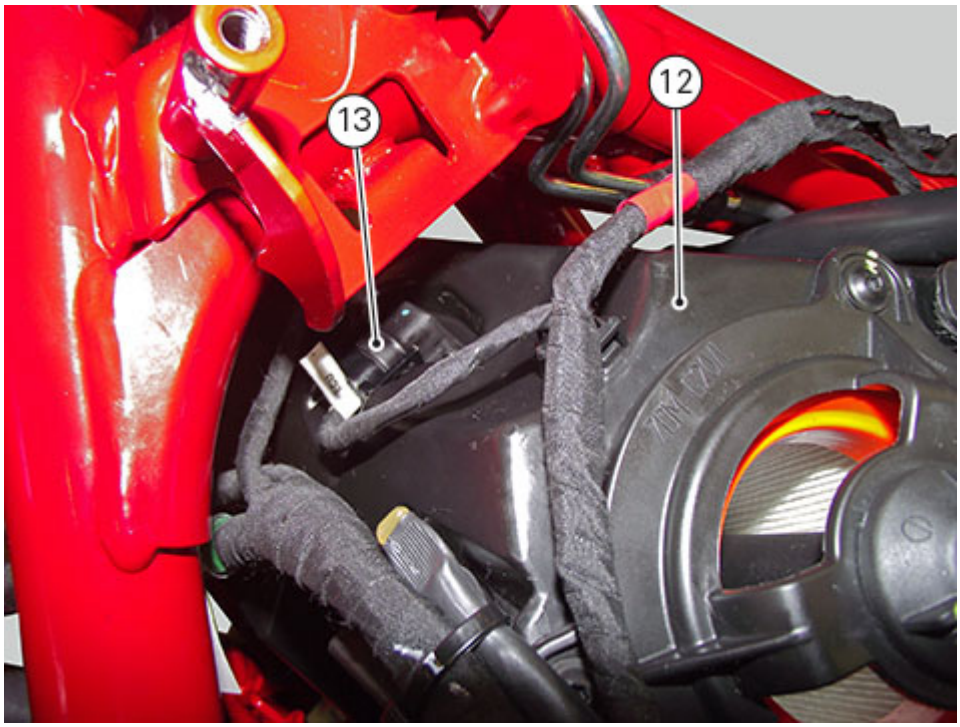

Refit the three relays (10) and connect connectors (11).

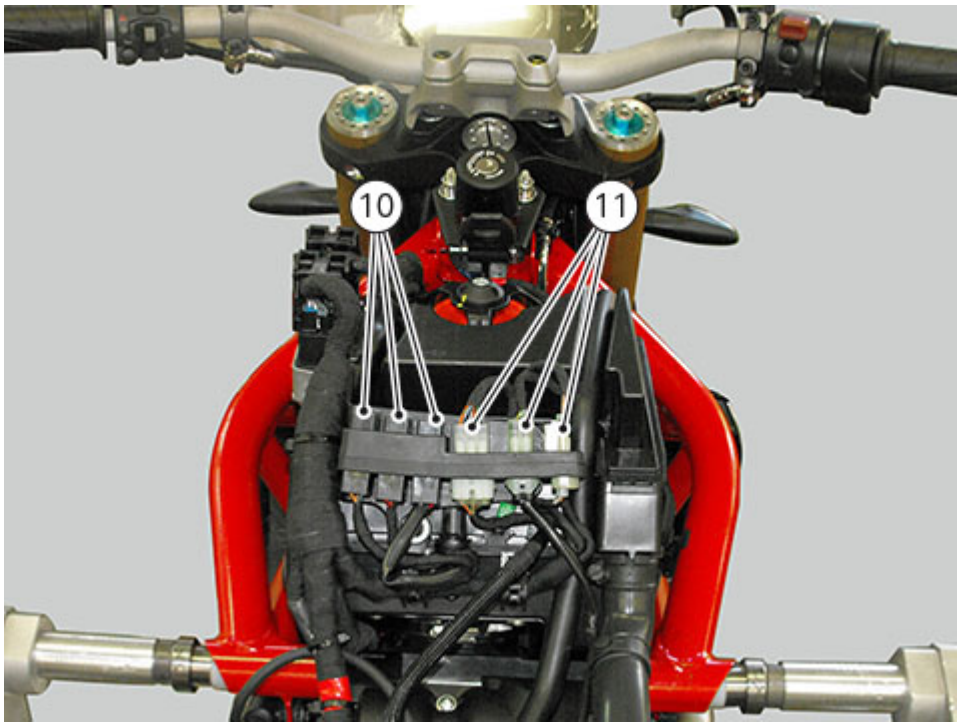

Tighten clamp (7) to fix the secondary air system pipes (6) on the vertical head (8) and the horizontal head (9).

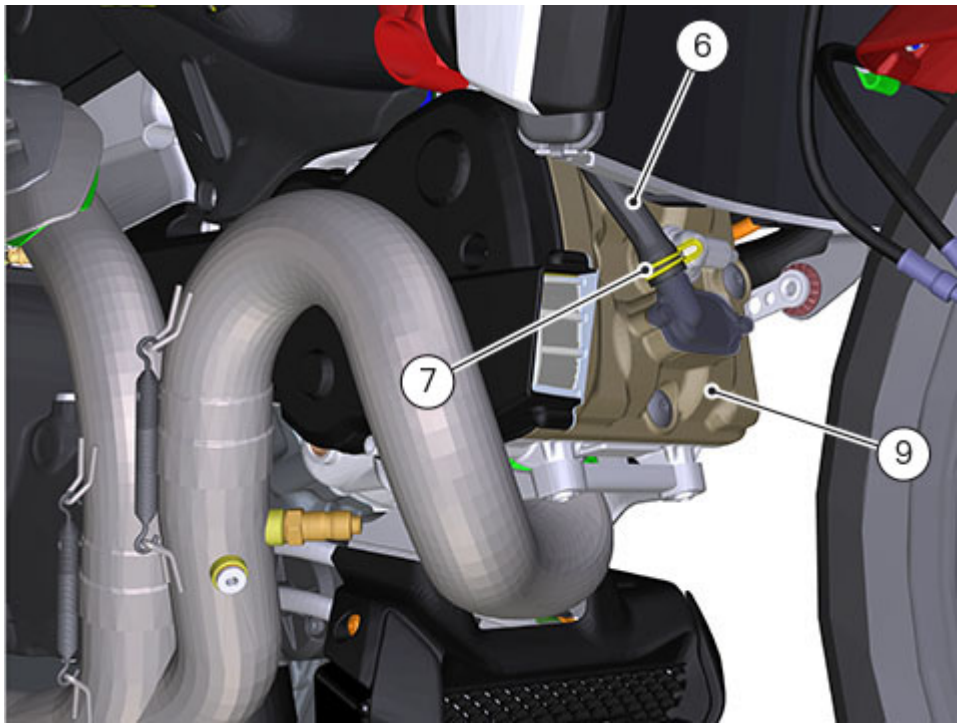

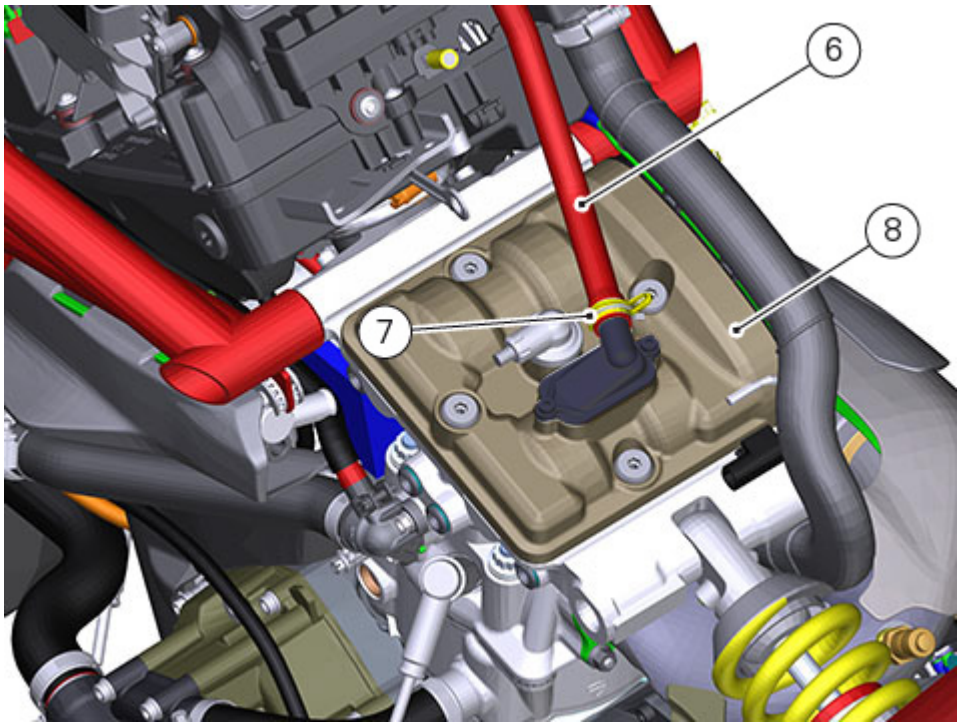

Use ties (5) to fix the main wiring to the airbox.

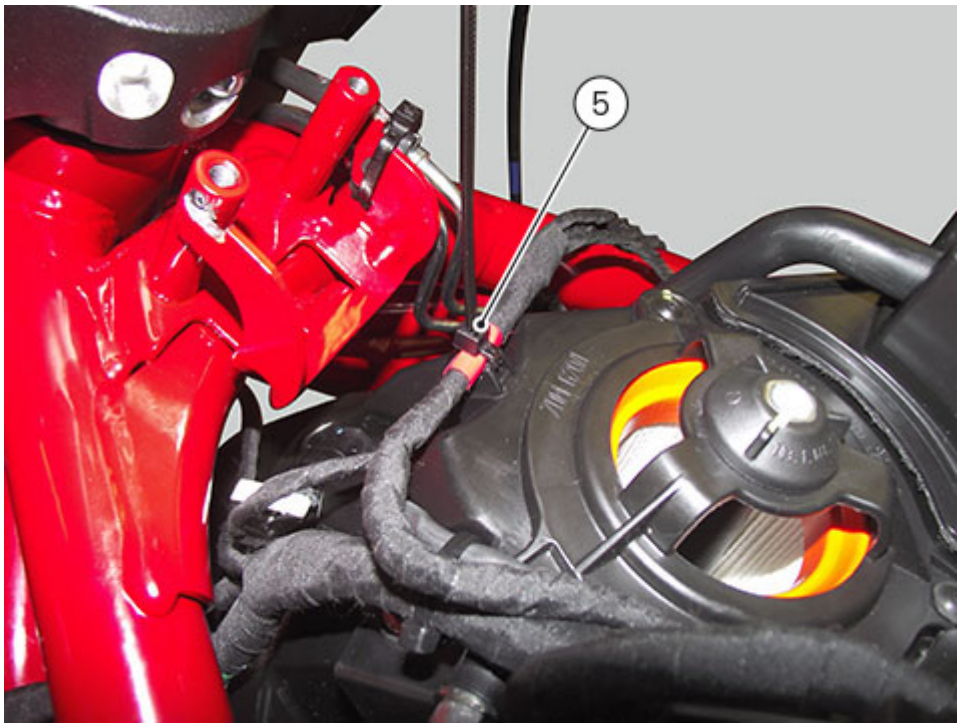

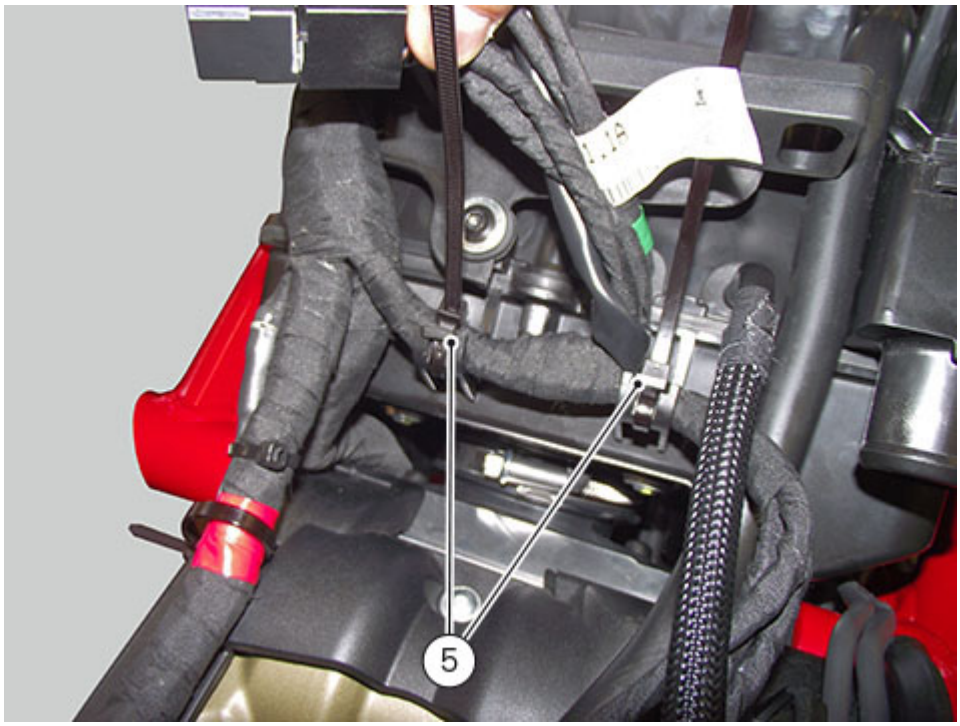

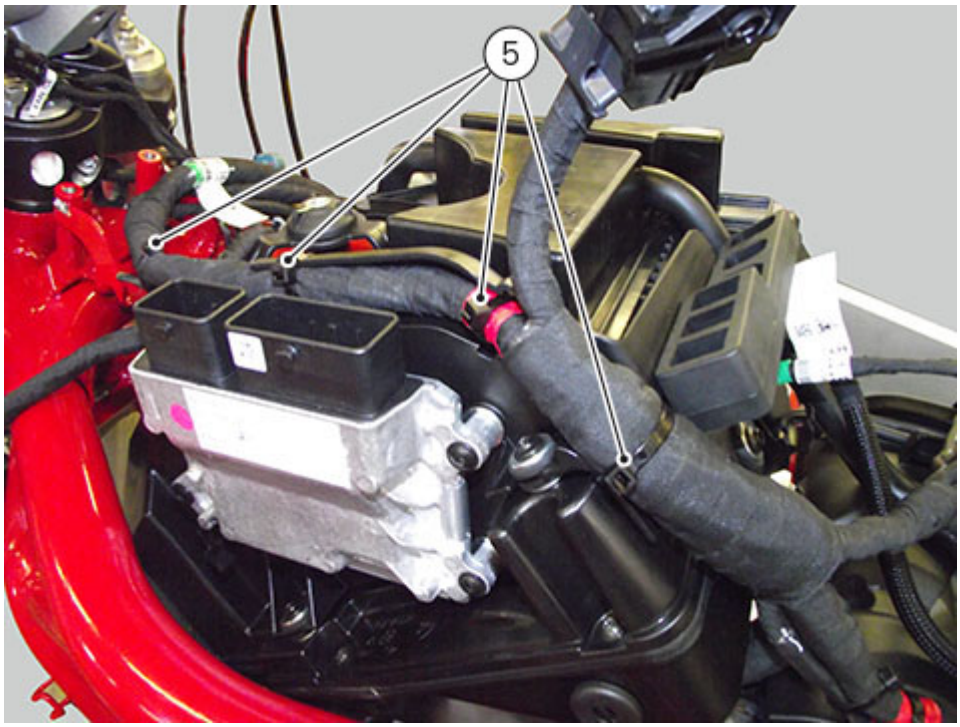

Connect control unit (3) by connecting connectors (4).

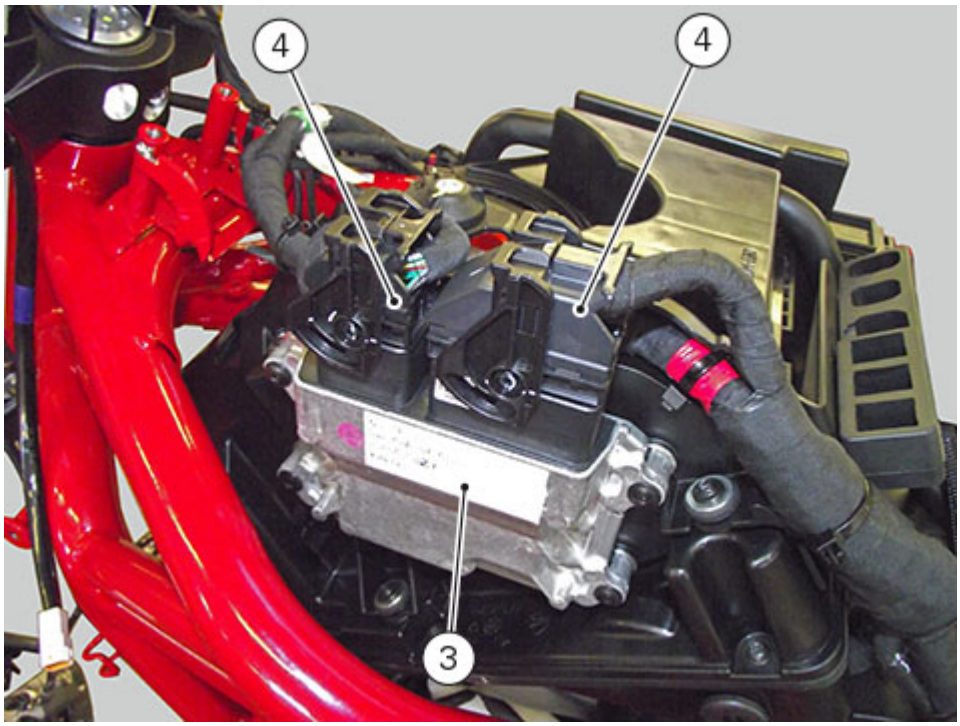

Connect the blow-by hose (1) by closing clamp (2).

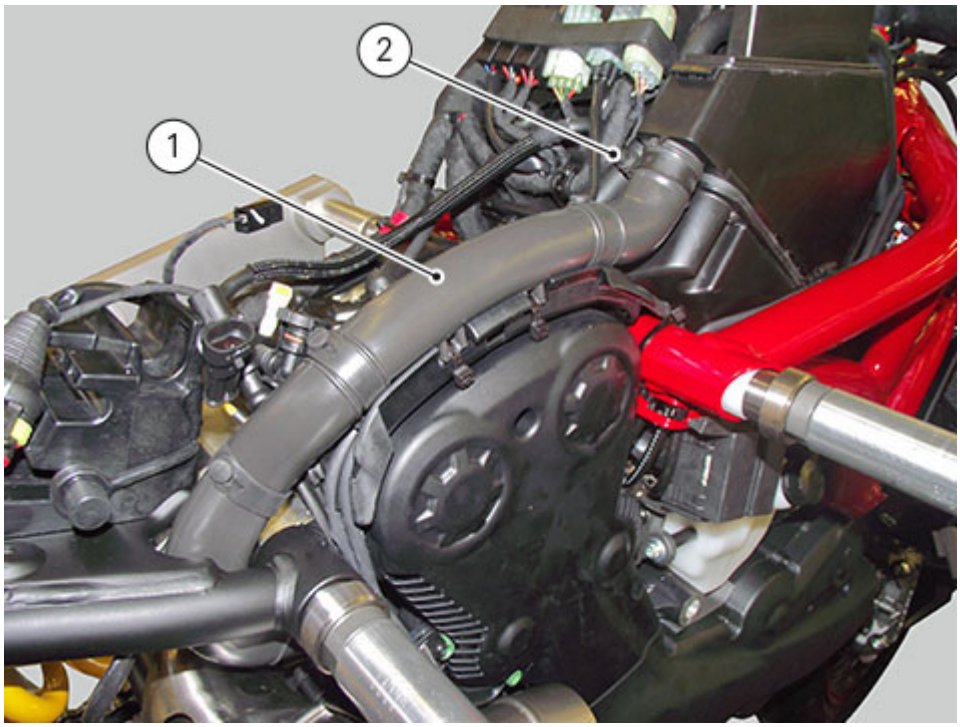

Refit the fuel tank (Refitting the fuel tank).
Refit the seat (Refitting the seat).

Removing the airbox and throttle body

REMOVING THE AIRBOX

Remove the fuel tank (Removing the fuel tank).

Disconnect the blow-by hose (1) by loosening clamp (2).

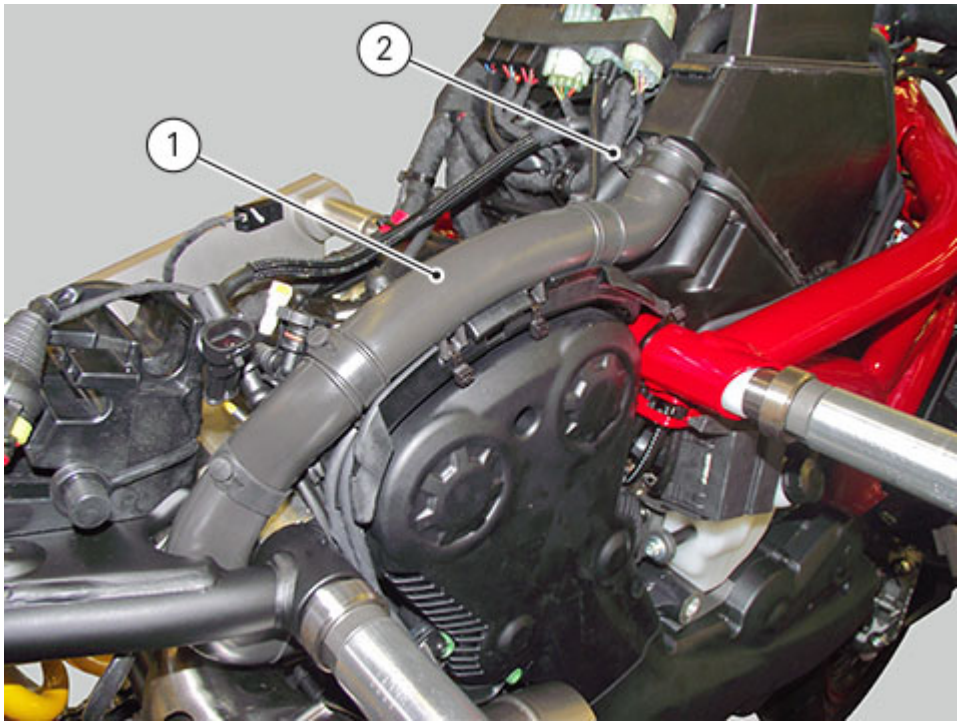

Disconnect control unit (3) by removing connectors (4).

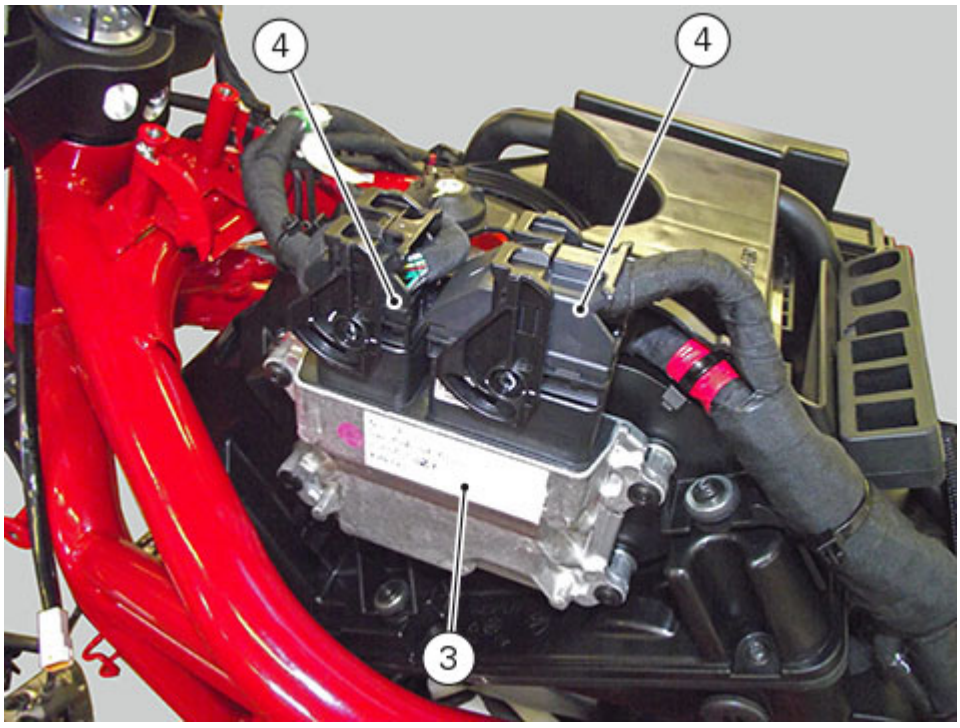

Remove ties (5) to release the main wiring from the airbox.

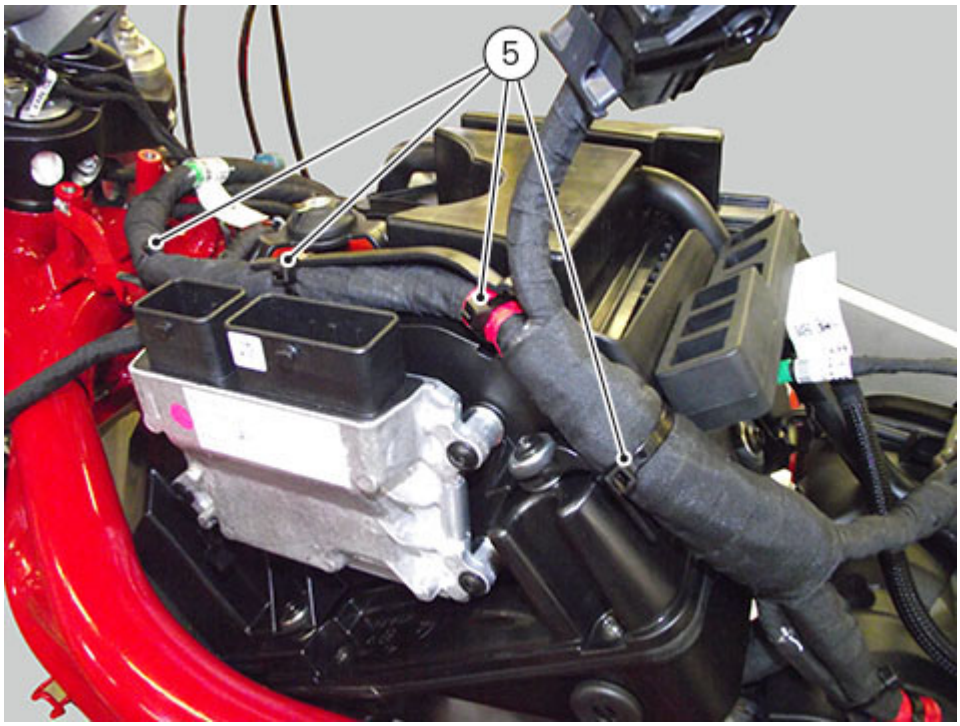
5

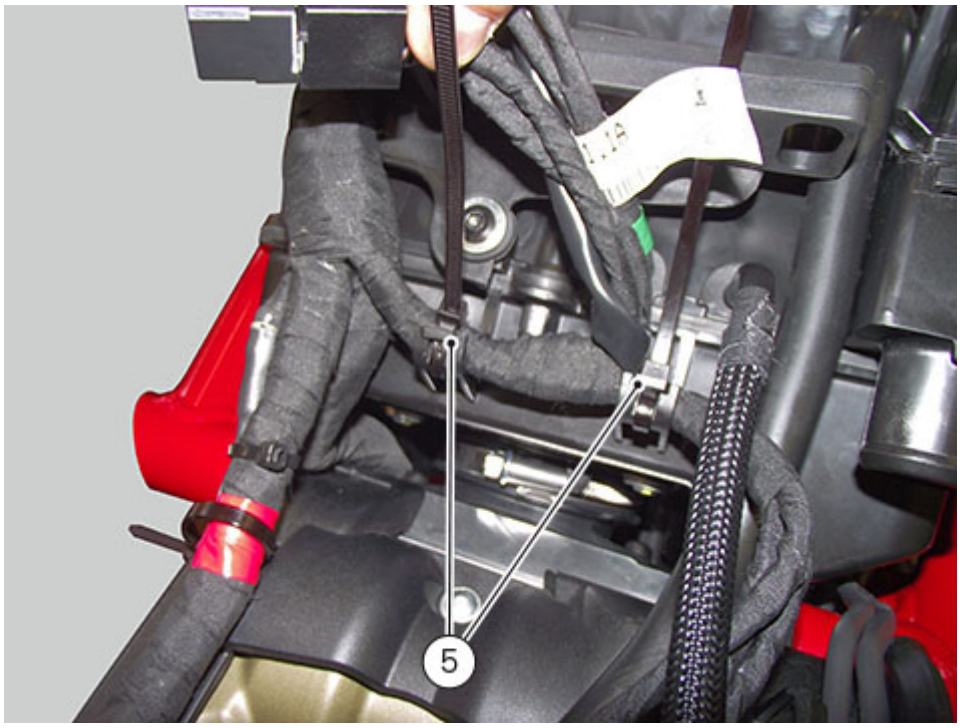
5

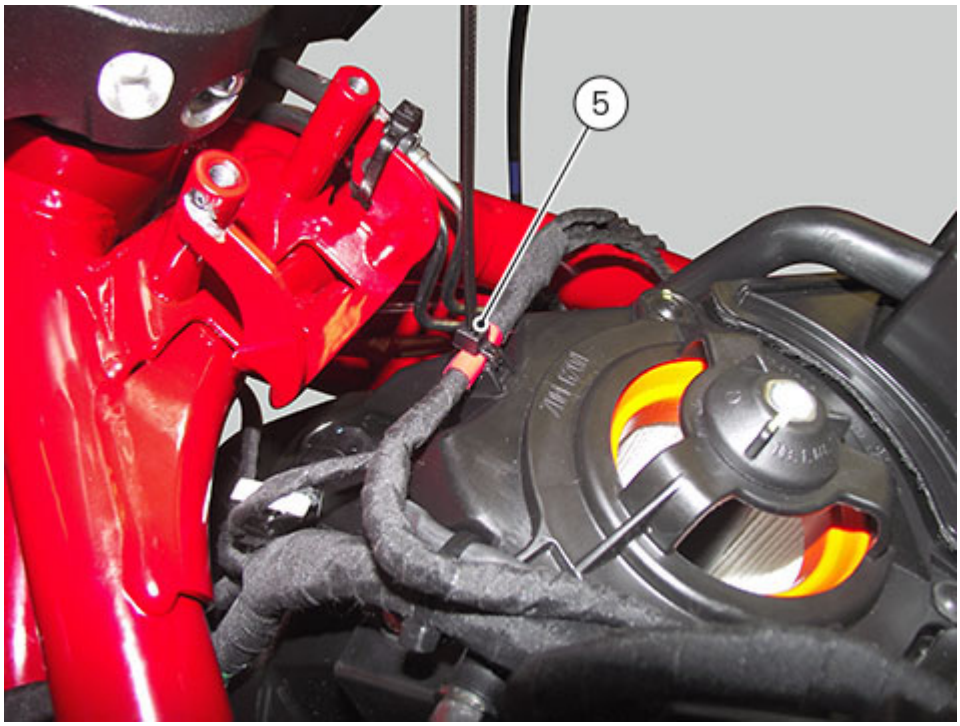

Loosen clamp (7) to disconnect the secondary air system pipes (6) from the vertical head (8) and the horizontal head (9).

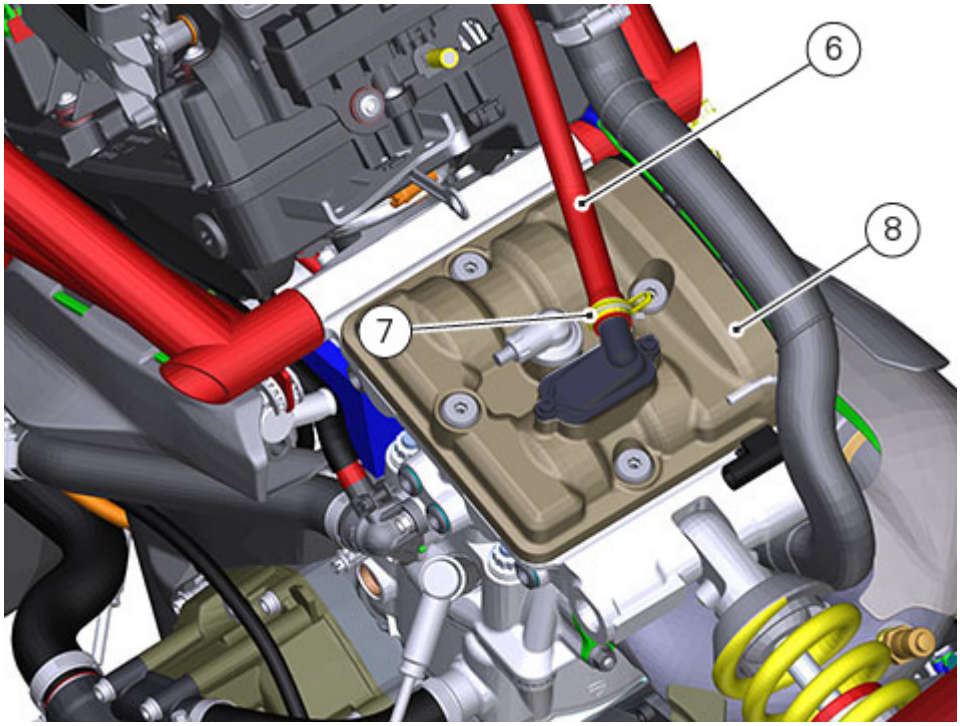

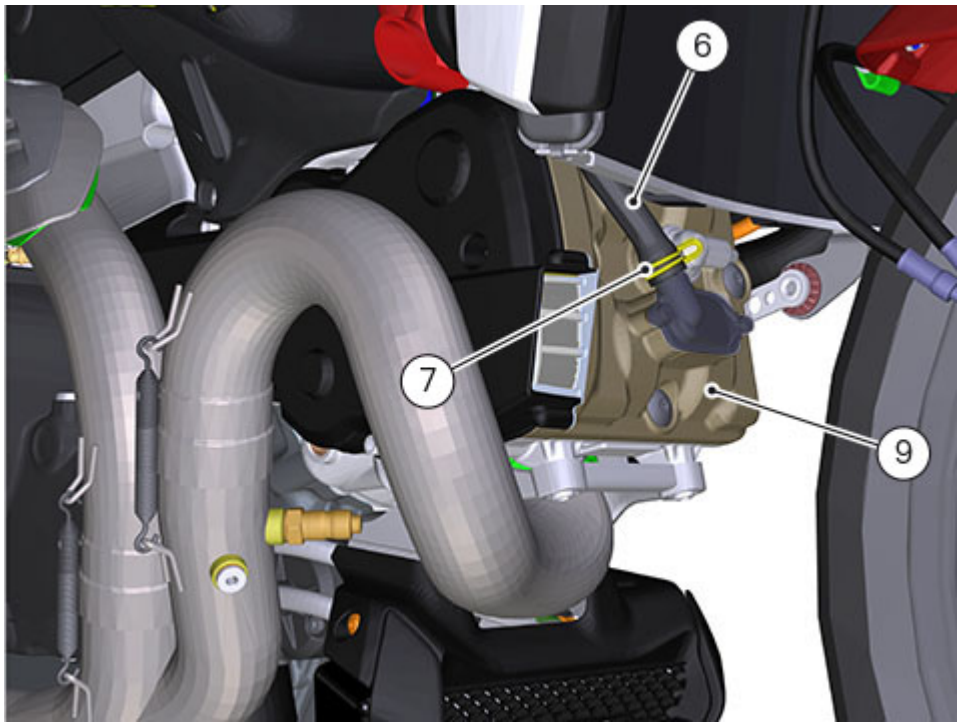

Remove the three relays (10) and disconnect connectors (11).

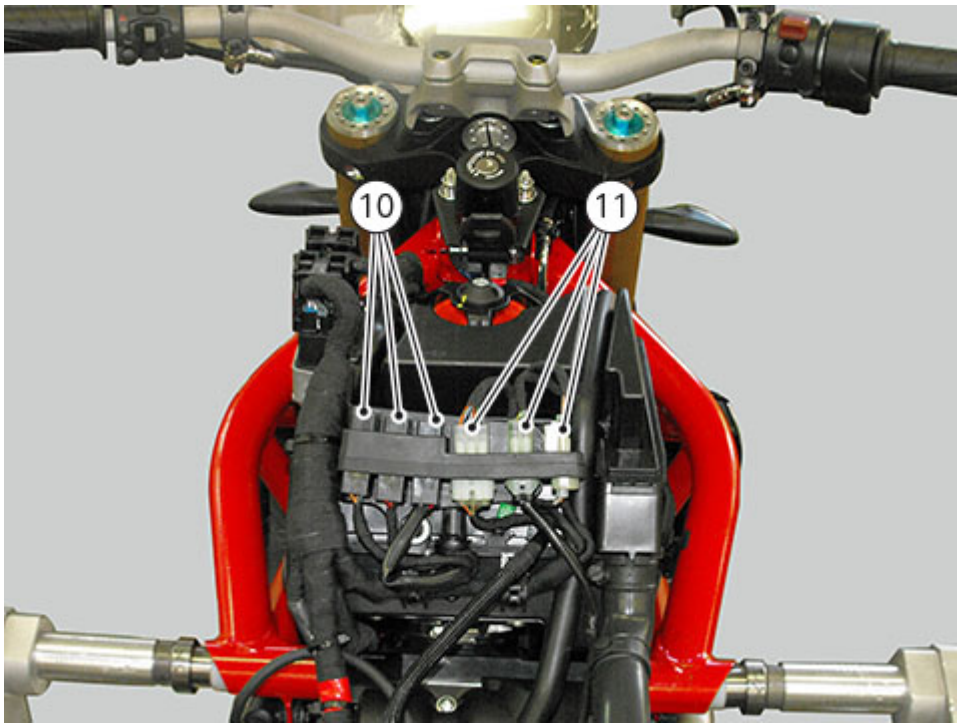

Working on the airbox (12) front side, disconnect the air temperature sensor connector (13).

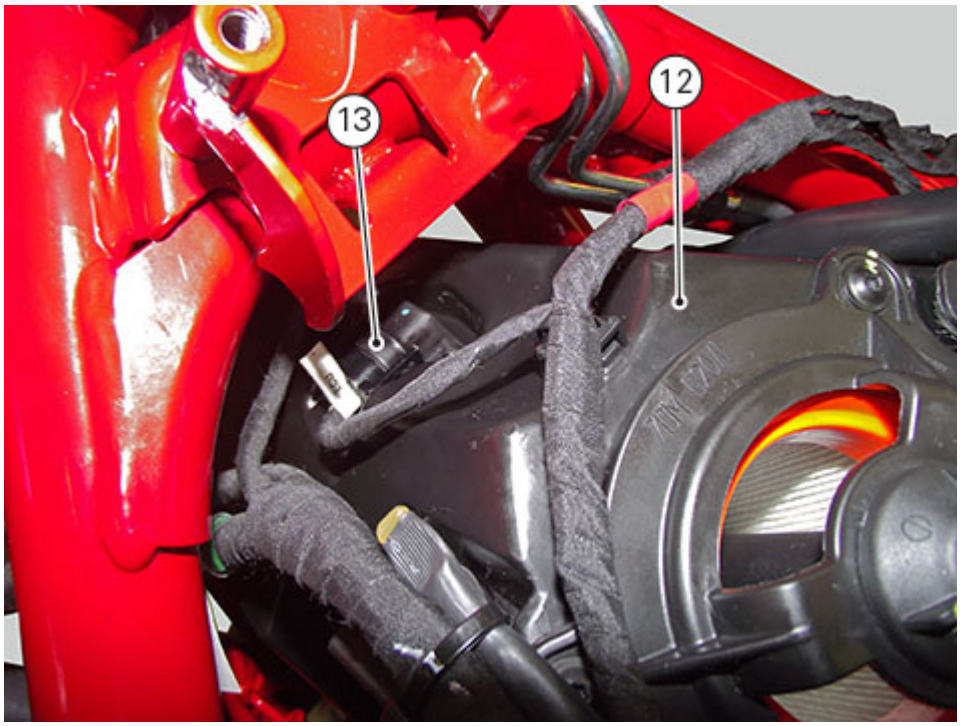

Disconnect the immobilizer antenna connectors (14) and ignition switch (15).

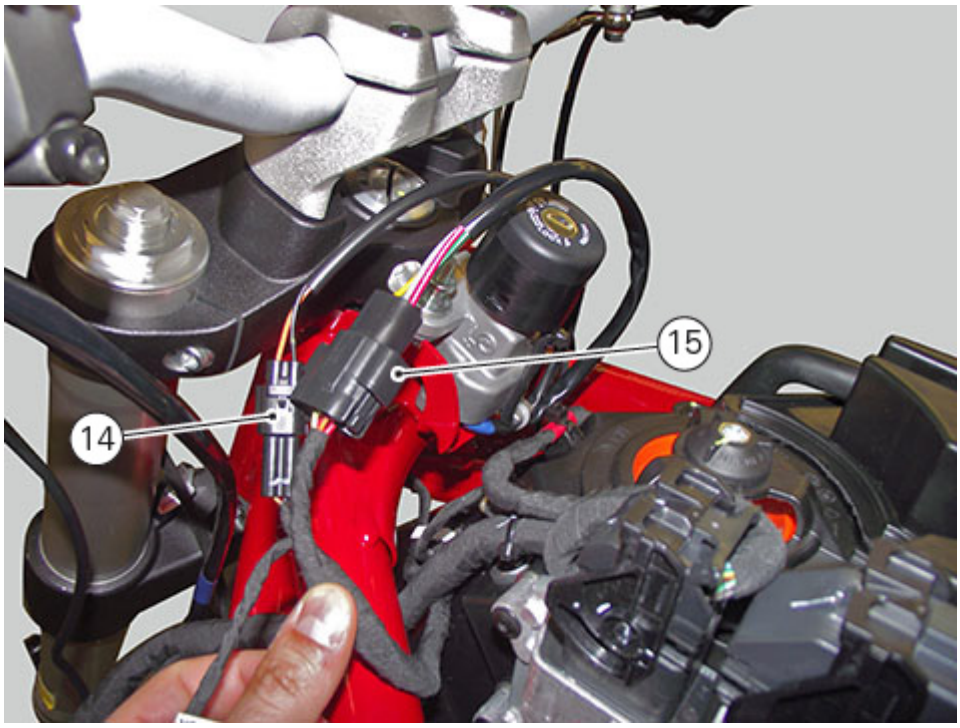

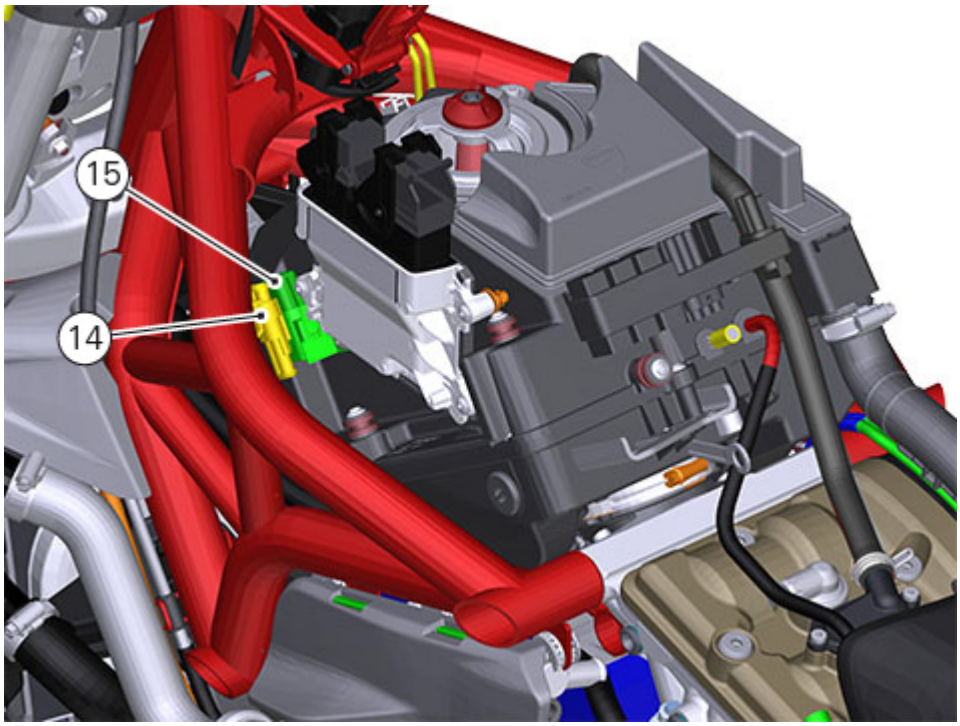

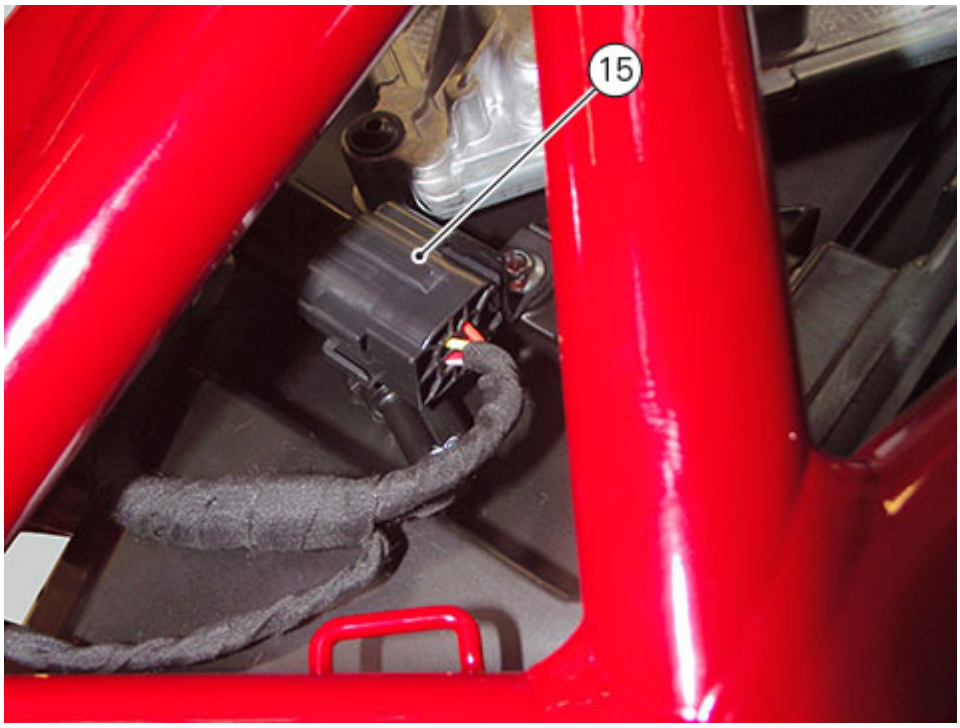

Working on the horizontal cylinder, loosen clamp (16) that retains air filter (12).

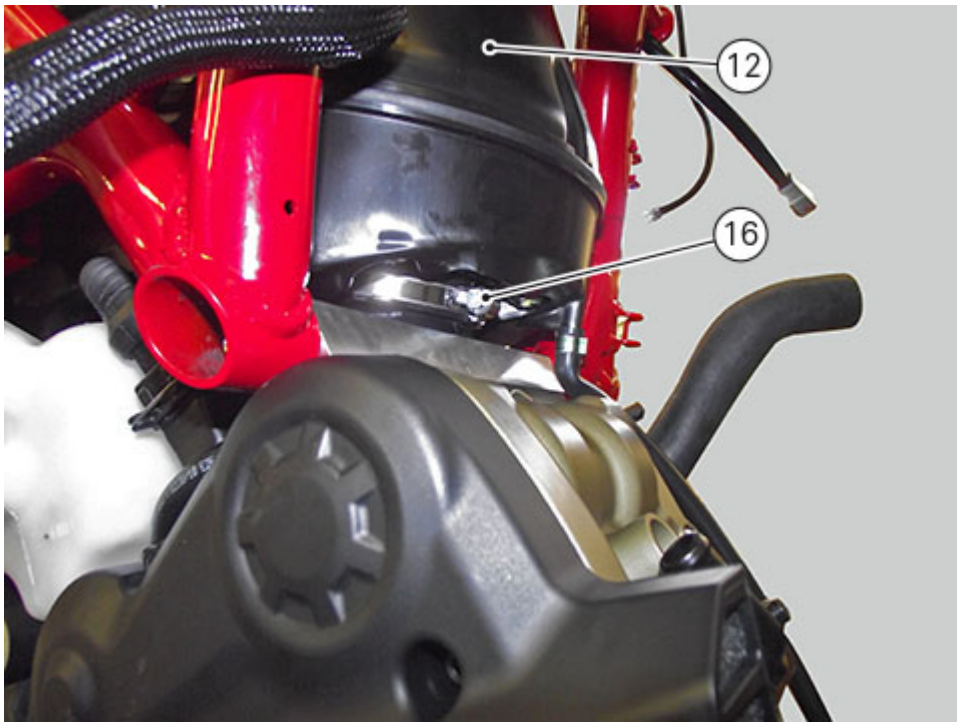

Working on the vertical cylinder, loosen clamp (17) that retains the air filter (12).

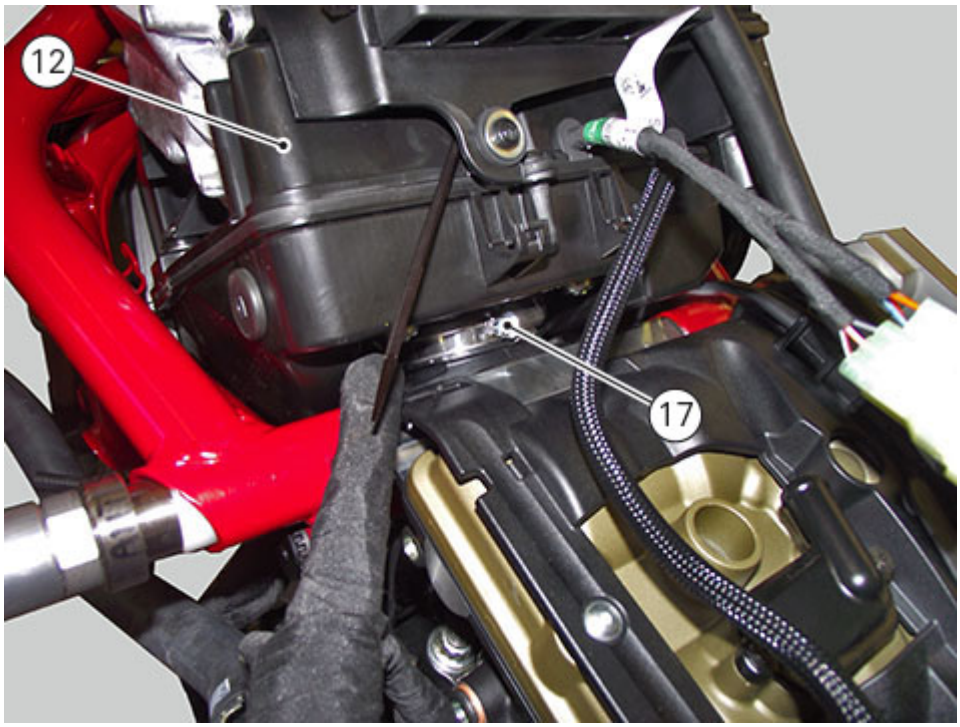

Disconnect the two pipes of MAP sensor (18) from the vertical and horizontal cylinder by loosening clamps (19) and (20).
Disconnect the connector (21).

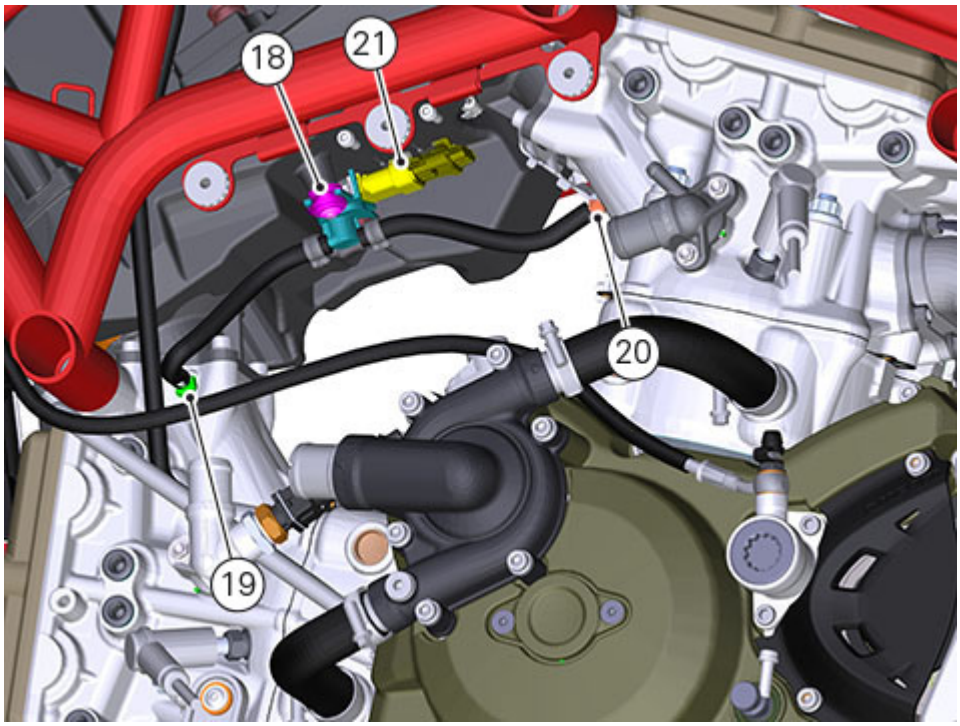

Remove the airbox from the frame.

REMOVING THE THROTTLE BODY

Loosen the six retaining screws (1) of the airbox upper cover.
Remove the upper part of the airbox.

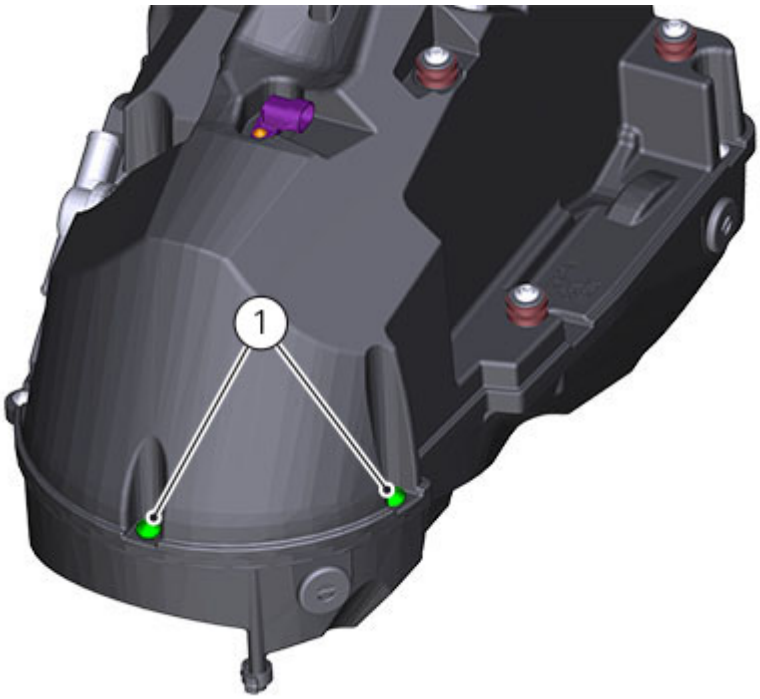

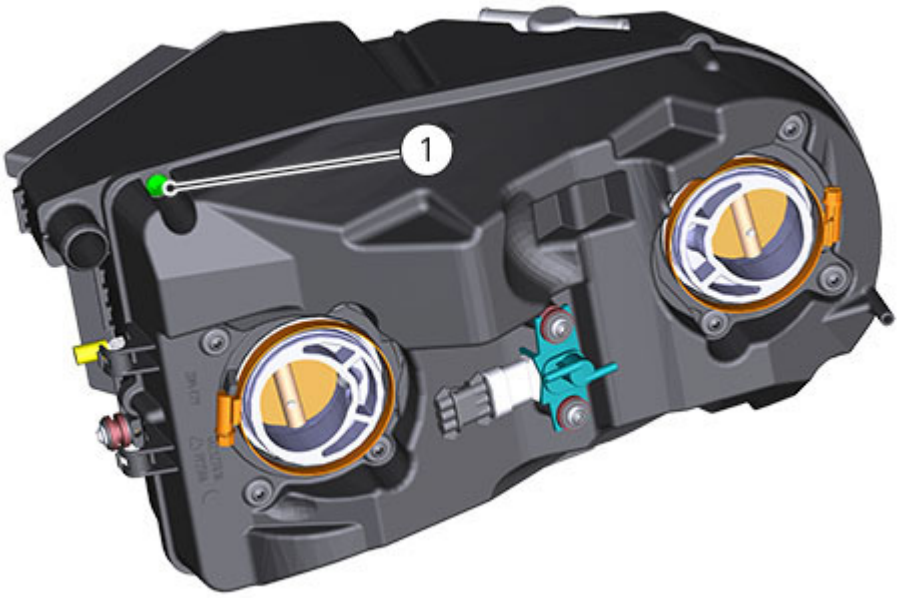
1

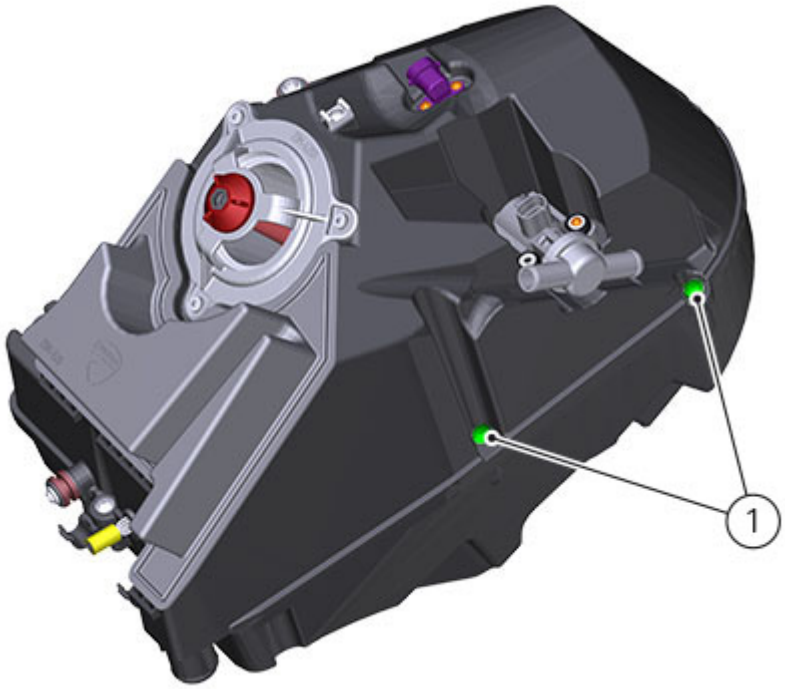
1

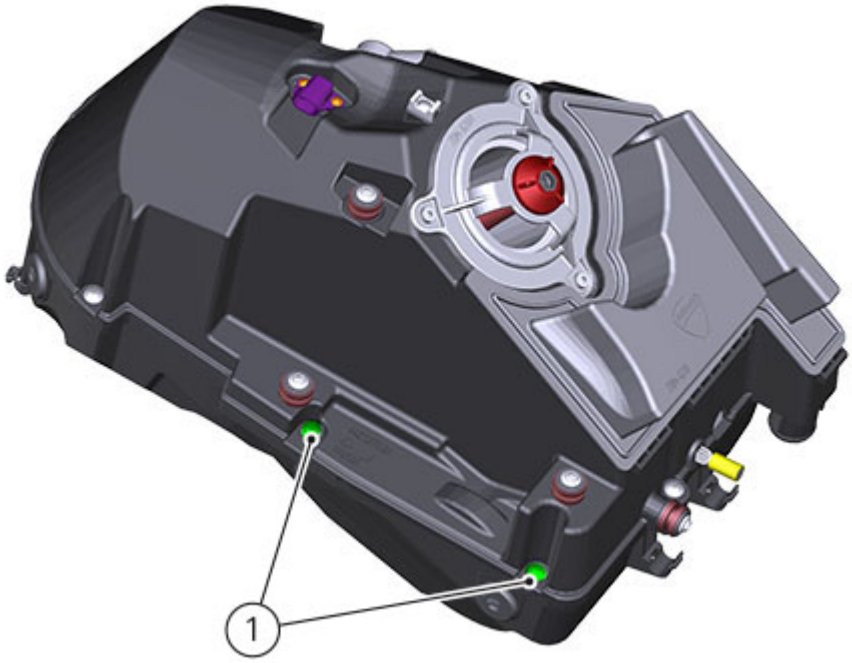

Loosen the eight retaining screws (2) of throttle bodies (3) and (4).

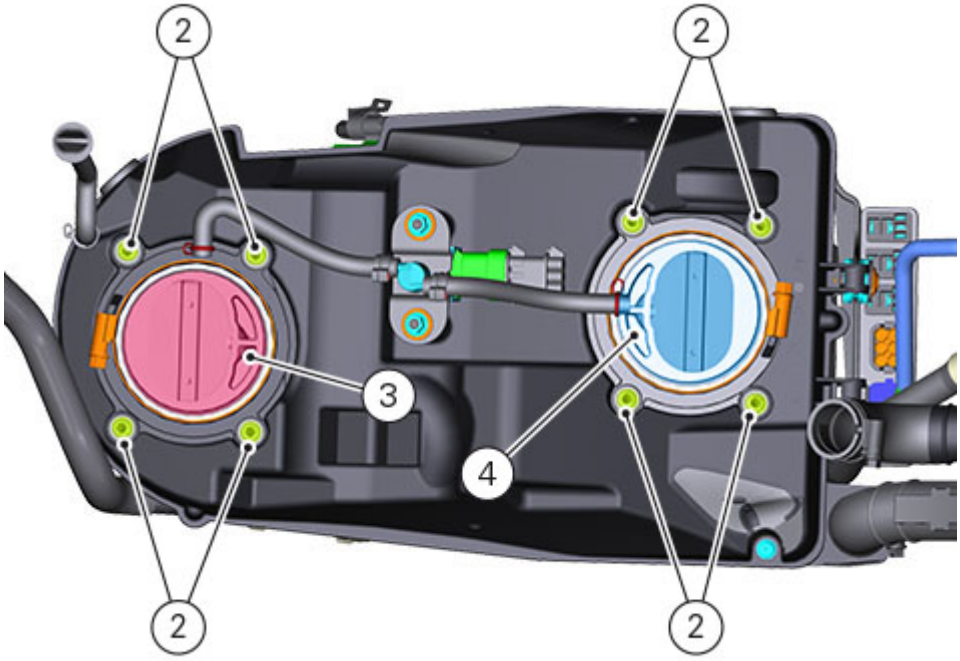

Remove the two throttle bodies.

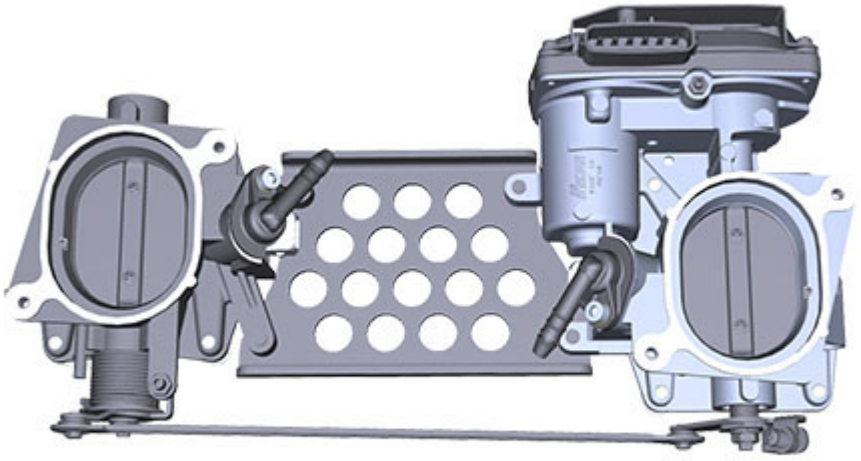

Refitting the secondary air system

Fit horizontal head (4) and vertical head (3) hoses, securing them with the relevant clamps (6) and (5).

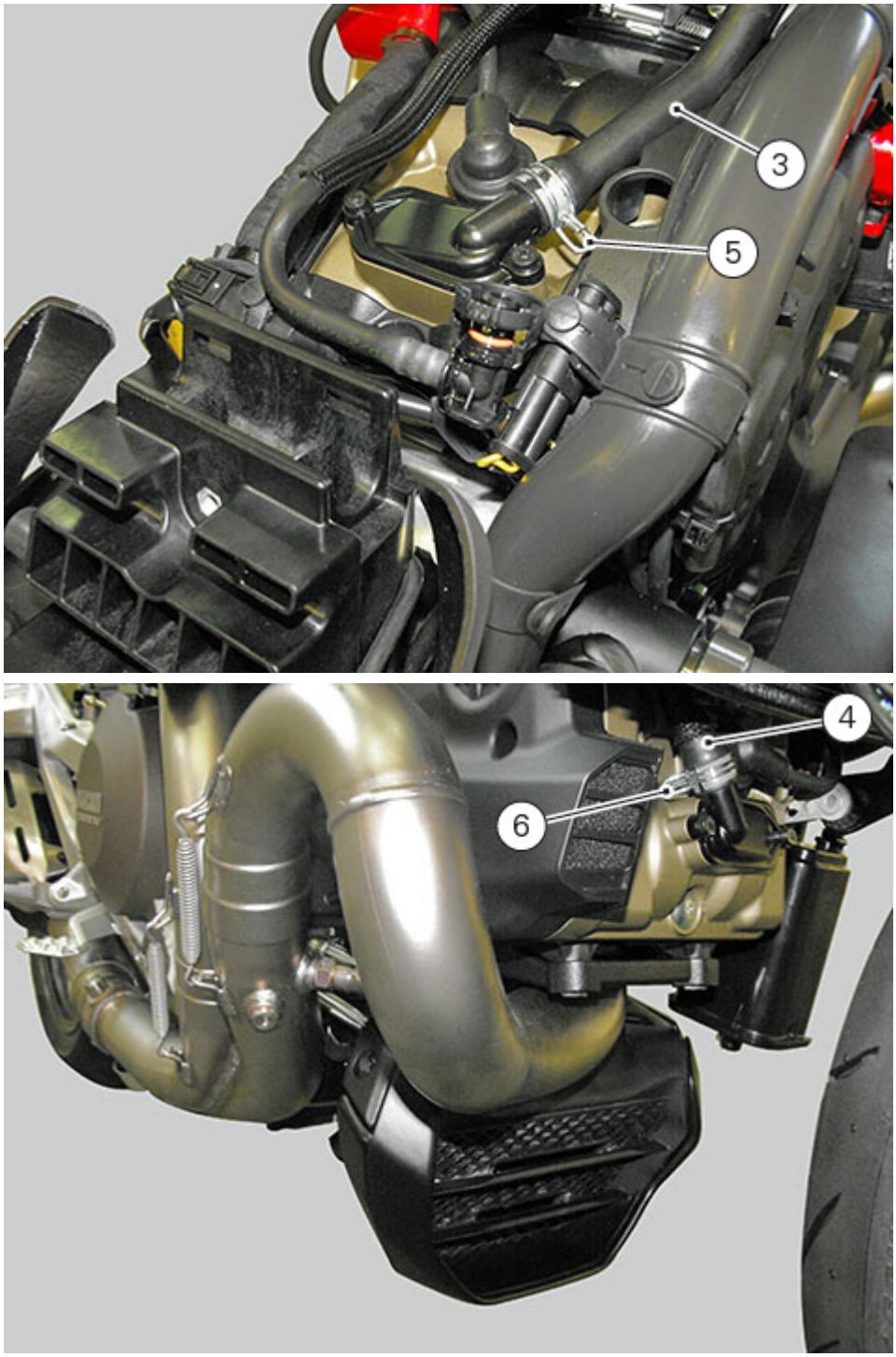

Fix hoses (3) and (4) to the secondary air system by means of two new ties (2).

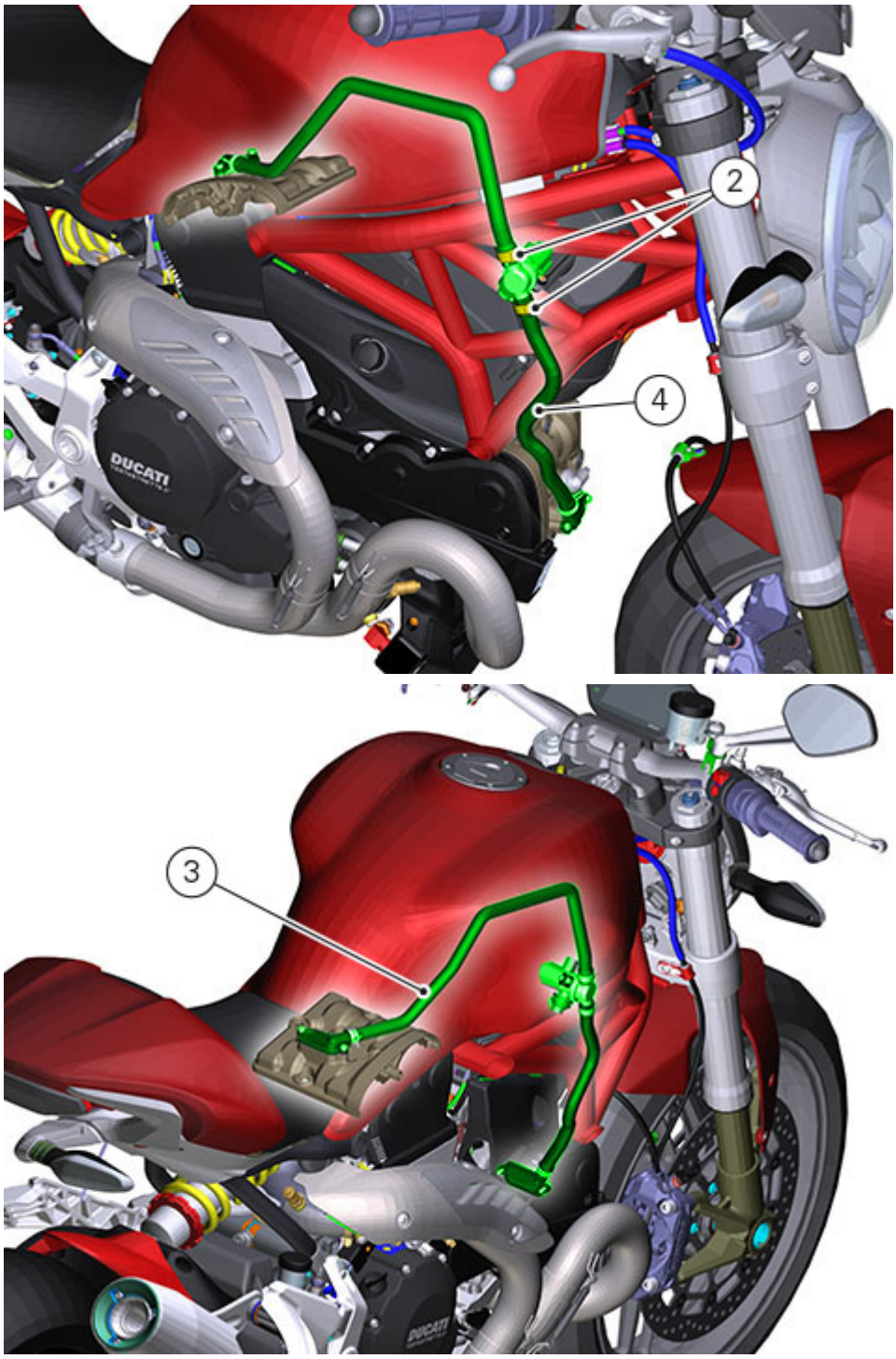

Make sure references (A) on hoses and actuator are aligned.

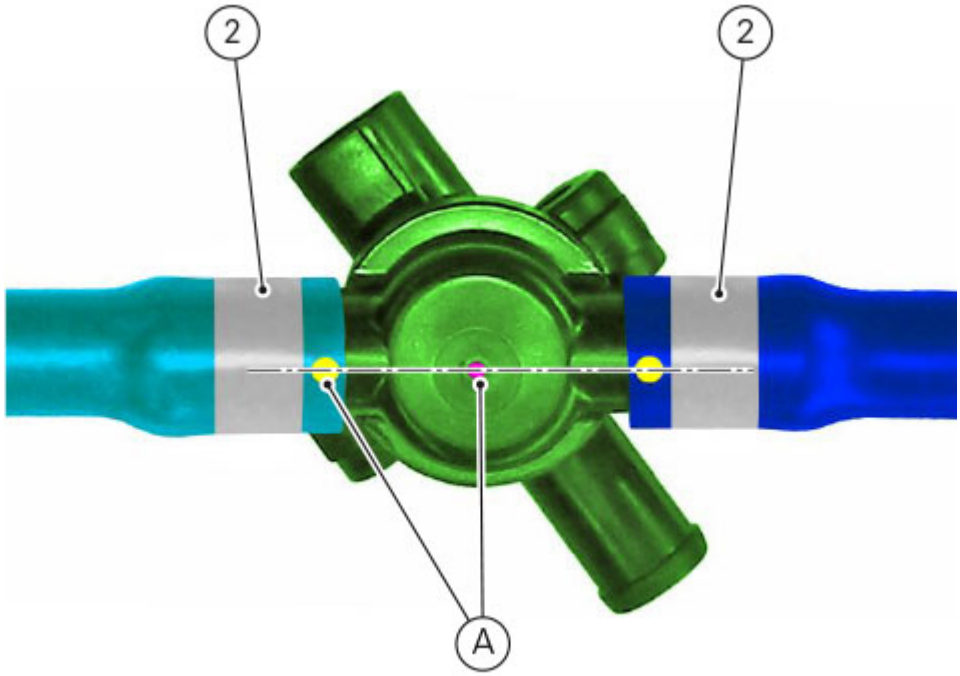

Connect the actuator connector (1).

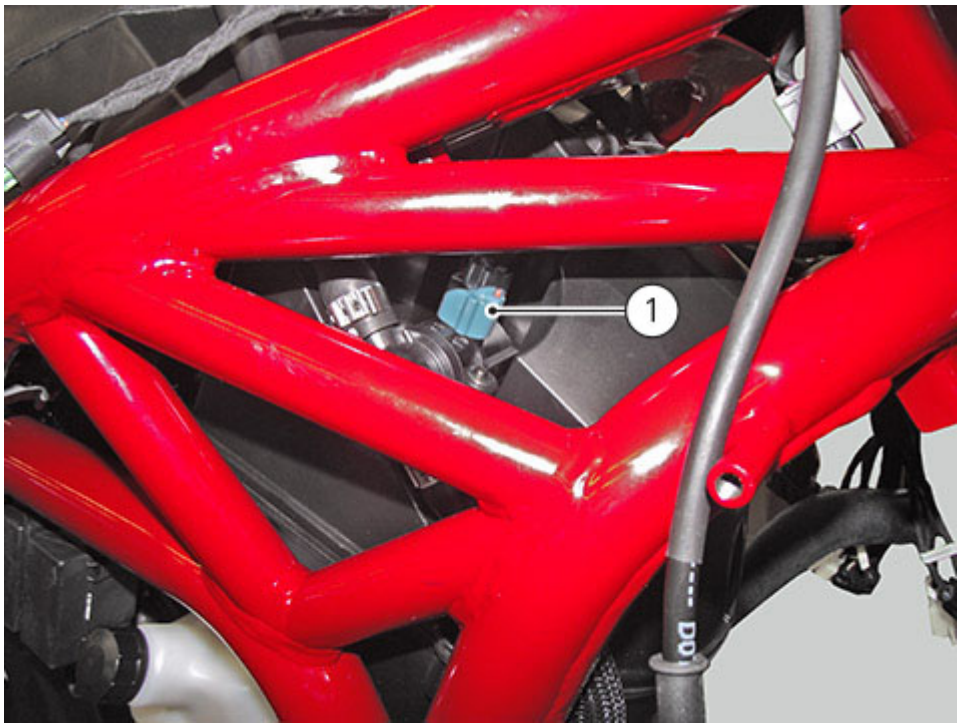

Note

Upon refitting, pay attention to the fitting correct position.

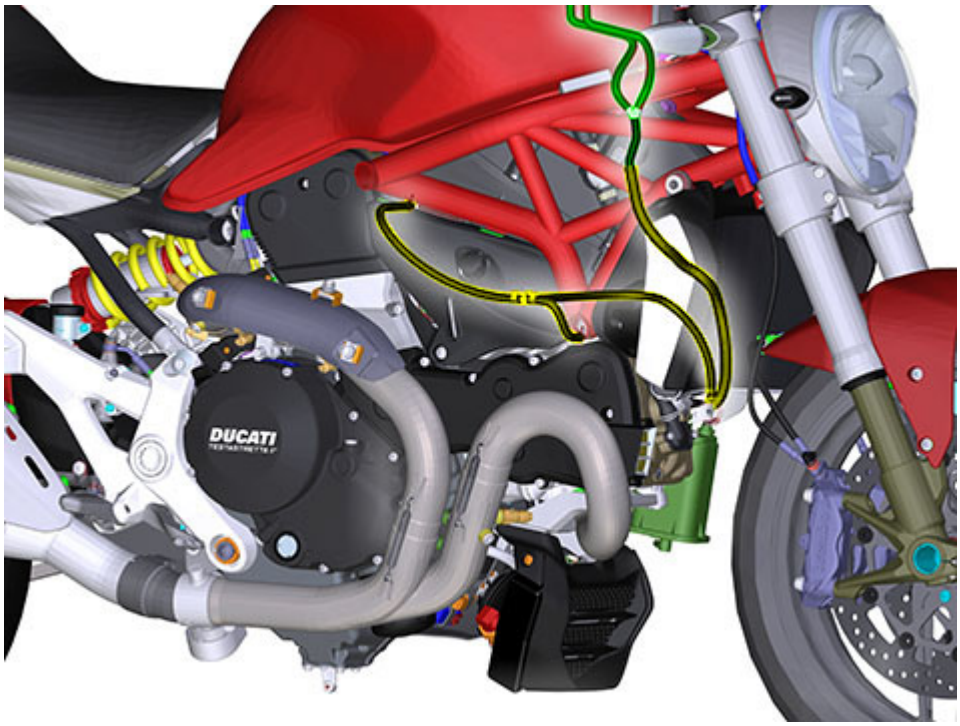

Refit the fuel tank (Refitting the fuel tank).
Refit the seat (Refitting the seat).

Removing the secondary air system

Remove the seat (Removing the seat).
Remove the fuel tank (Removing the fuel tank).

Disconnect connector (1) from the actuator.

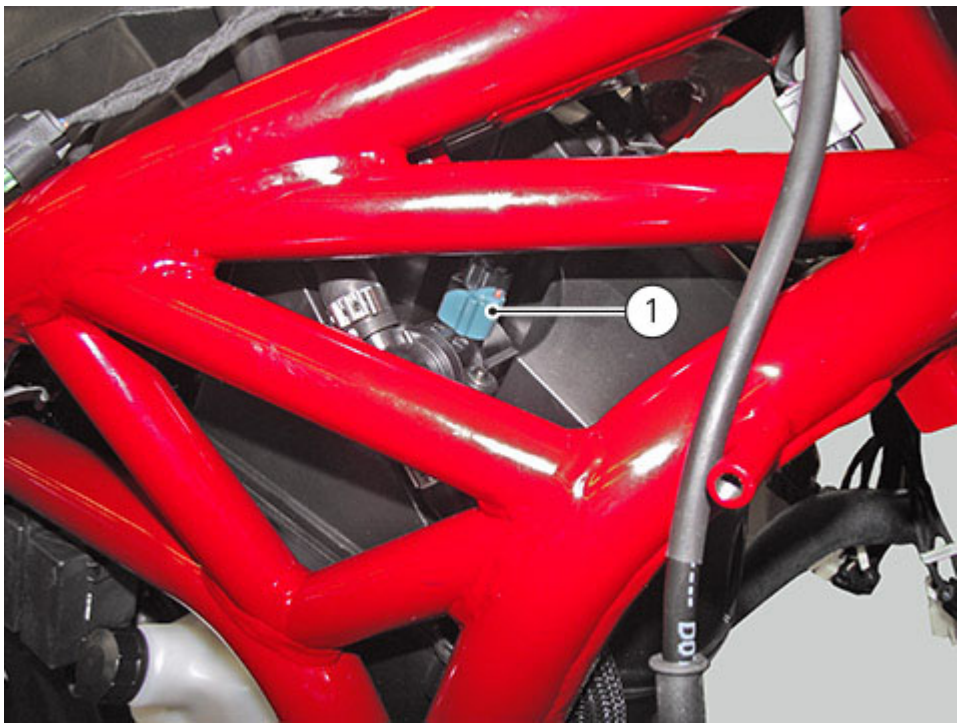

Slide out clamps (2) and hoses (3) from horizontal and vertical head (4).

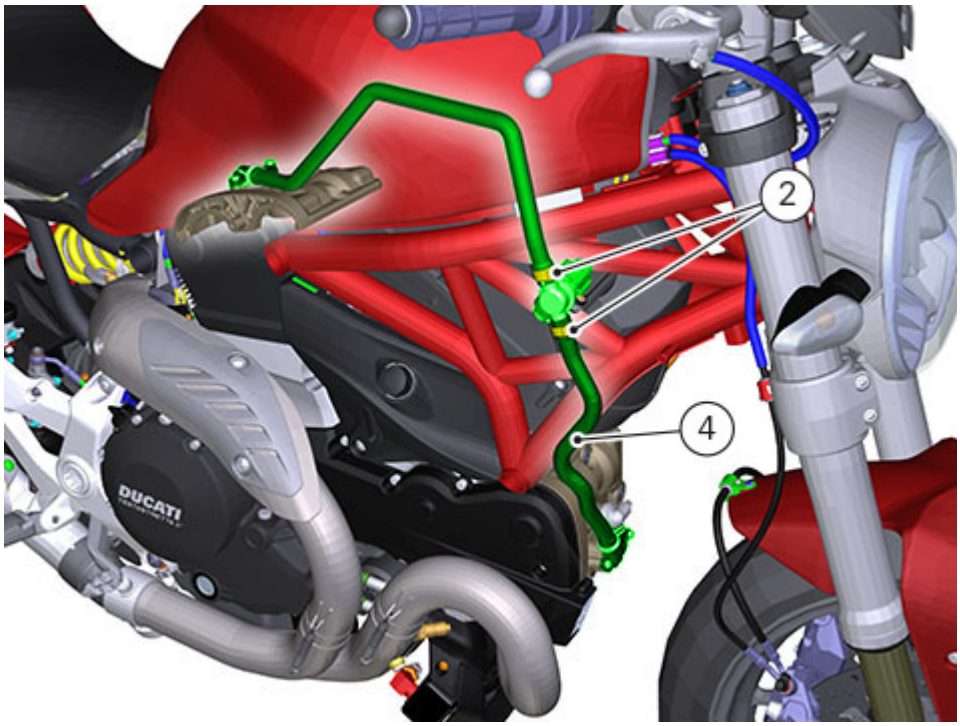

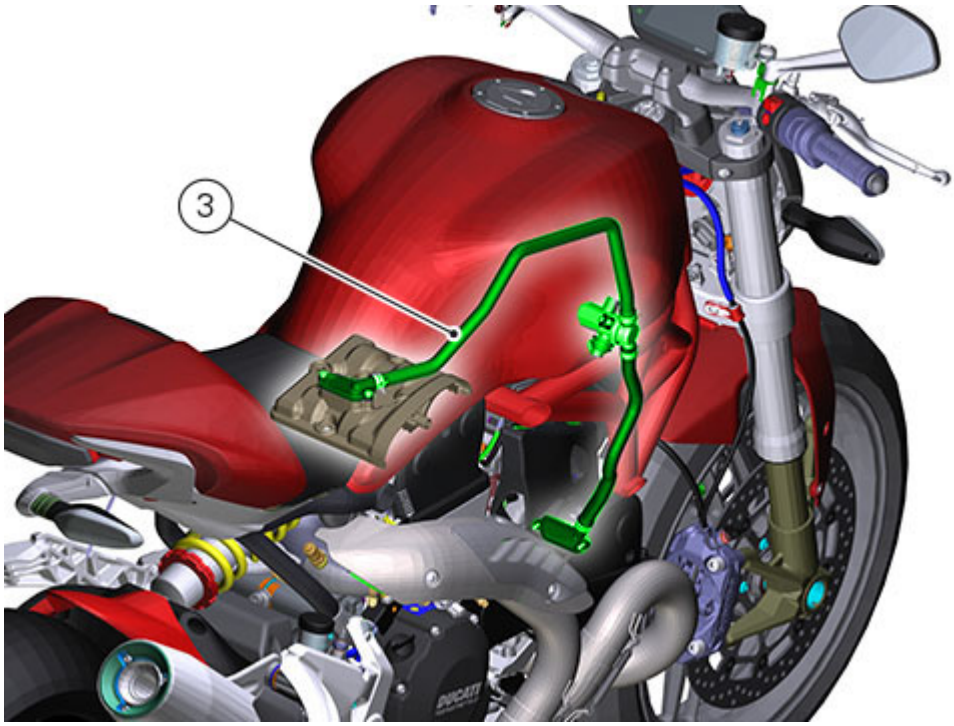

Slide out clamp (5) and remove the secondary air system hose (3) from the vertical head.

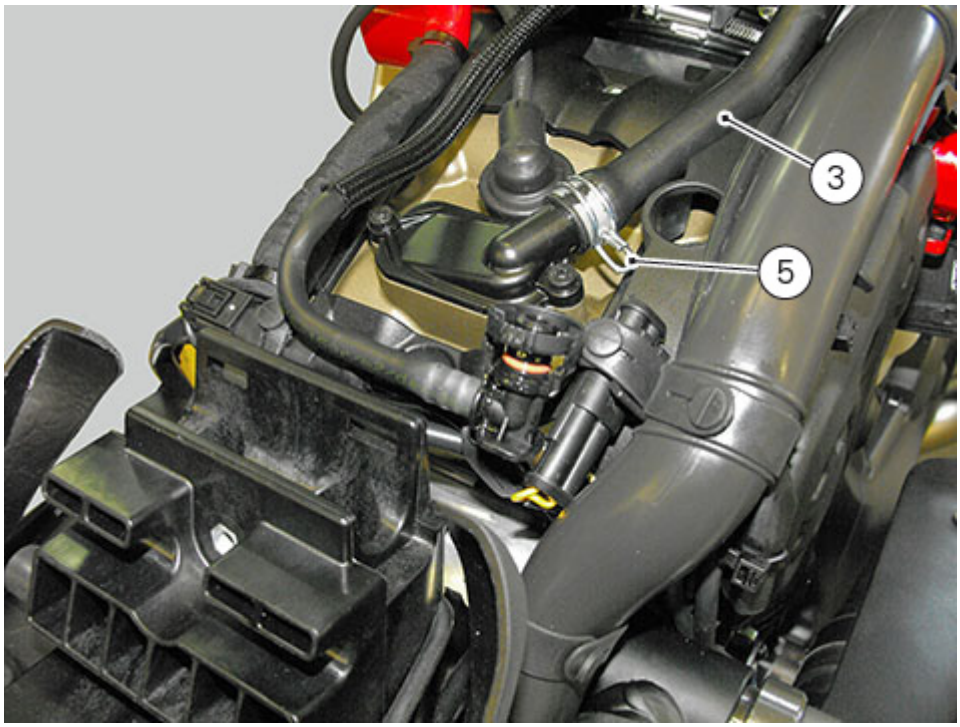

Repeat the operation on the horizontal head, sliding out clamp (6) and removing hose (4).

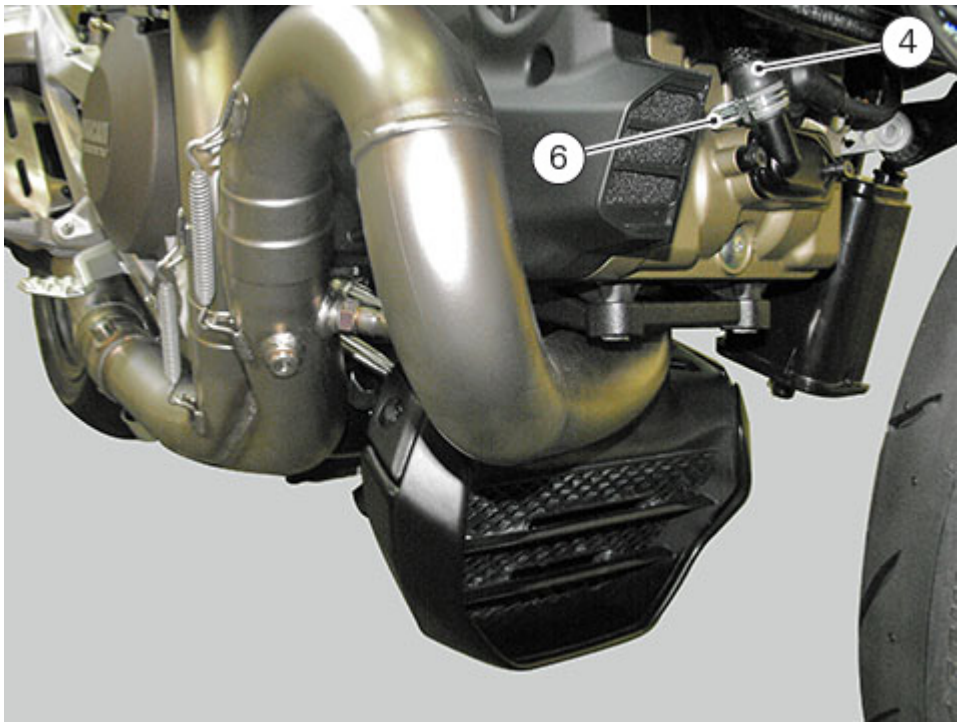
4
6

Refitting the air filter

Insert filter (3) in support (4) with the indications written on the filter edge facing upwards.
Position filter cover (5) and start ring nut (6).
Tighten ring nut (6) to a torque of 6Nm±10%.

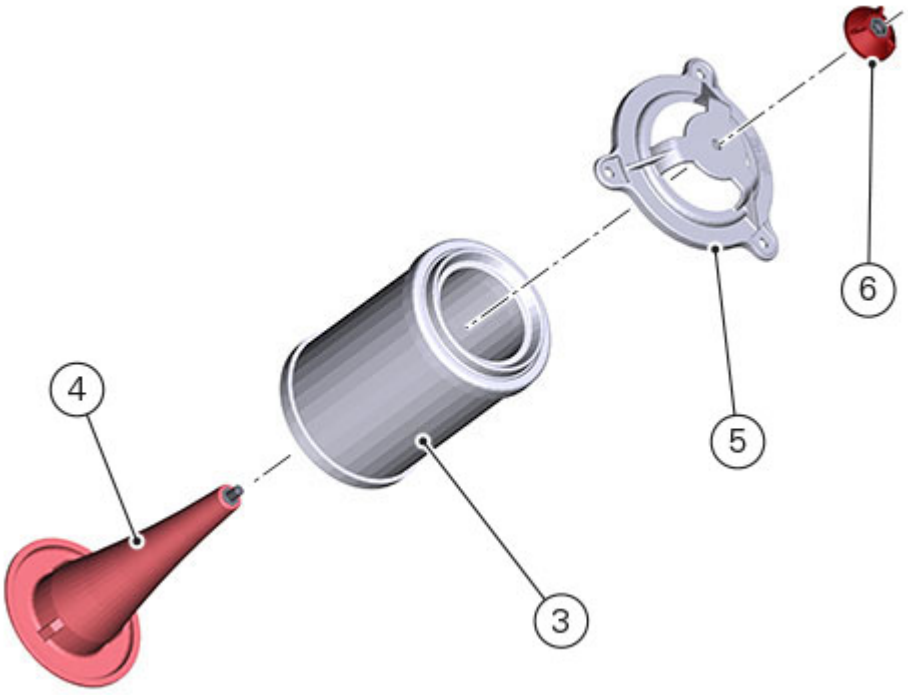

Refit the fuel tank (Refitting the fuel tank).

Removing the air filter

Remove the fuel tank (Removing the fuel tank).

Loosen and remove the three securing screws (1).

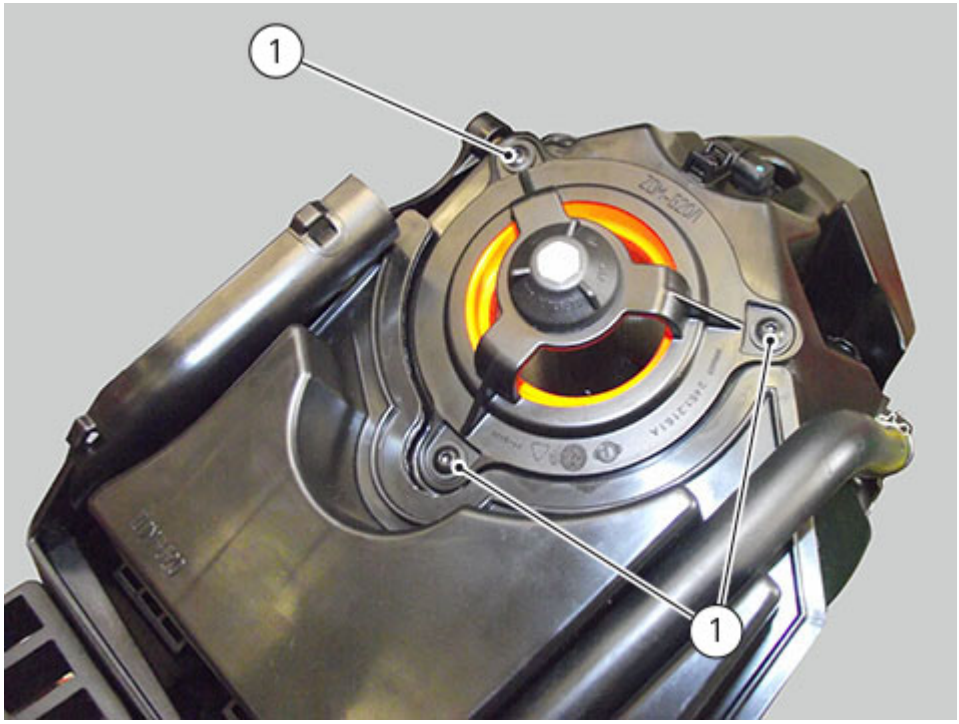

Slide out filter (2).

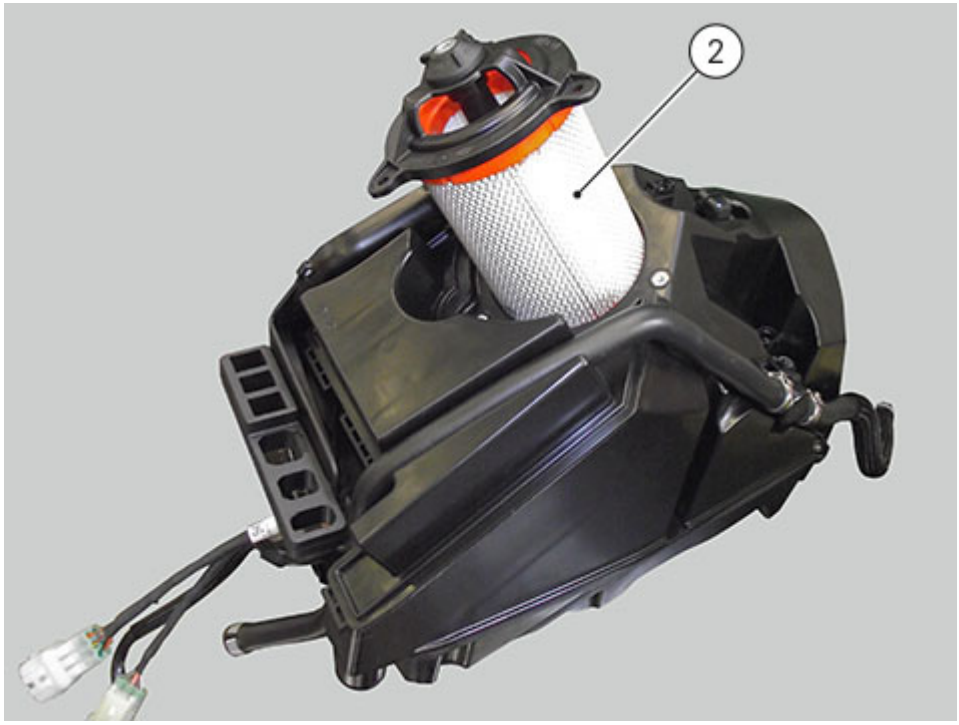

Refitting the silencer

If previously removed, secure the heat guard by tightening screws (7) to a torque of 4Nm±10%.

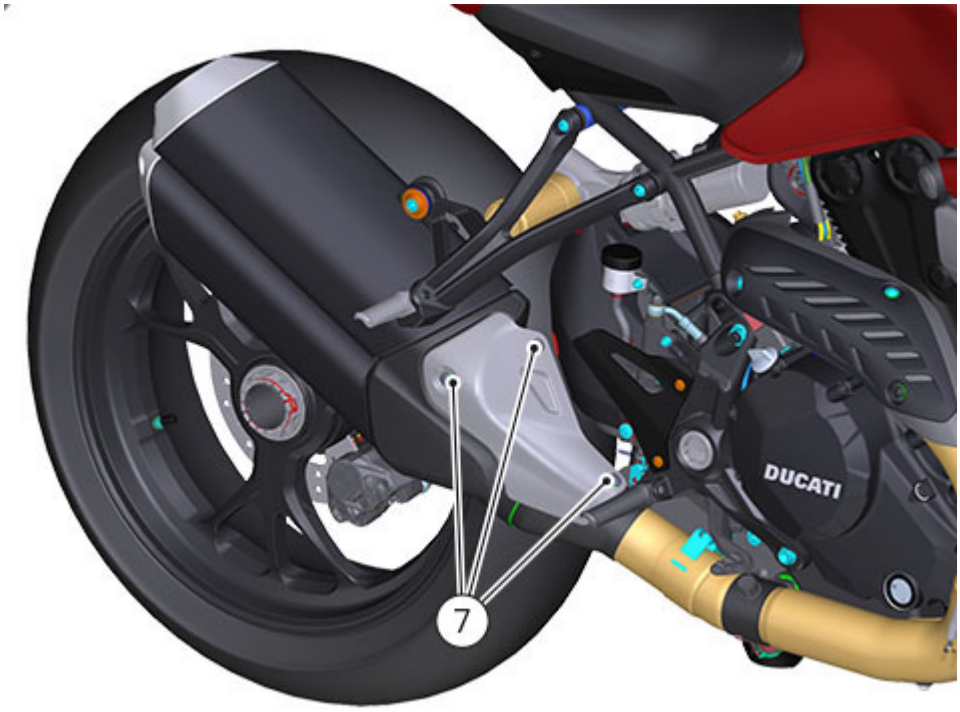

If previously removed, secure the battery box heat guard to the electric component support by tightening screws (5) to a torque of 3.5Nm±10%.

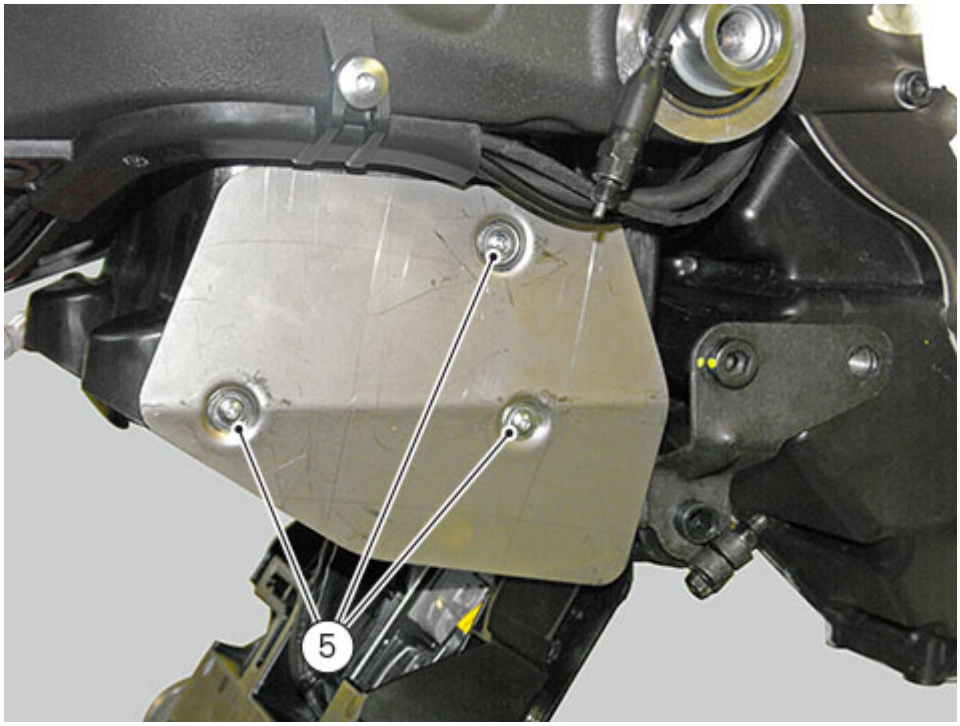

Insert silencer in the exhaust; check silent block correct position, then fit nut (5) behind and bushing (4) ahead of rear footpeg holder plate bracket (3).
Tighten the screw (2) to a torque of 7Nm ± 10%.

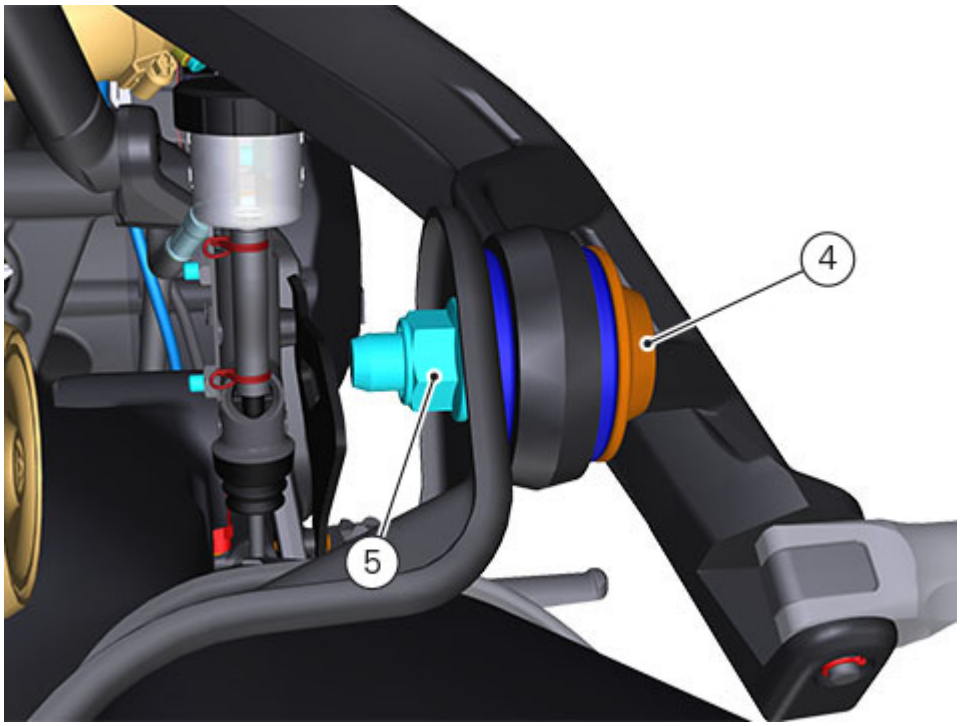

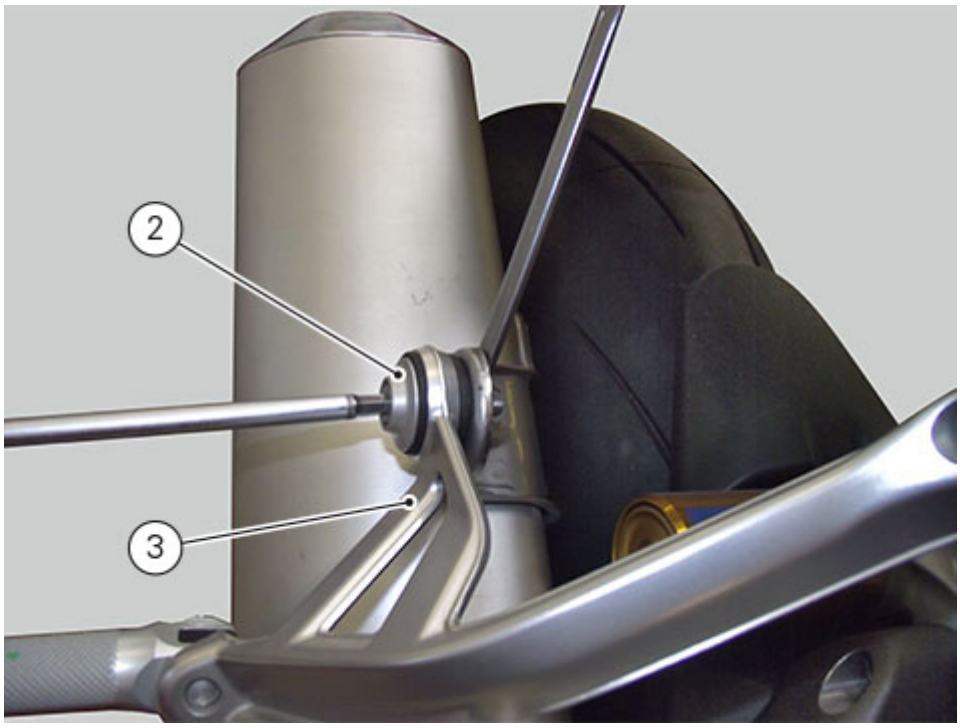

Tighten clamp (1) to a torque of 18Nm ±10%.

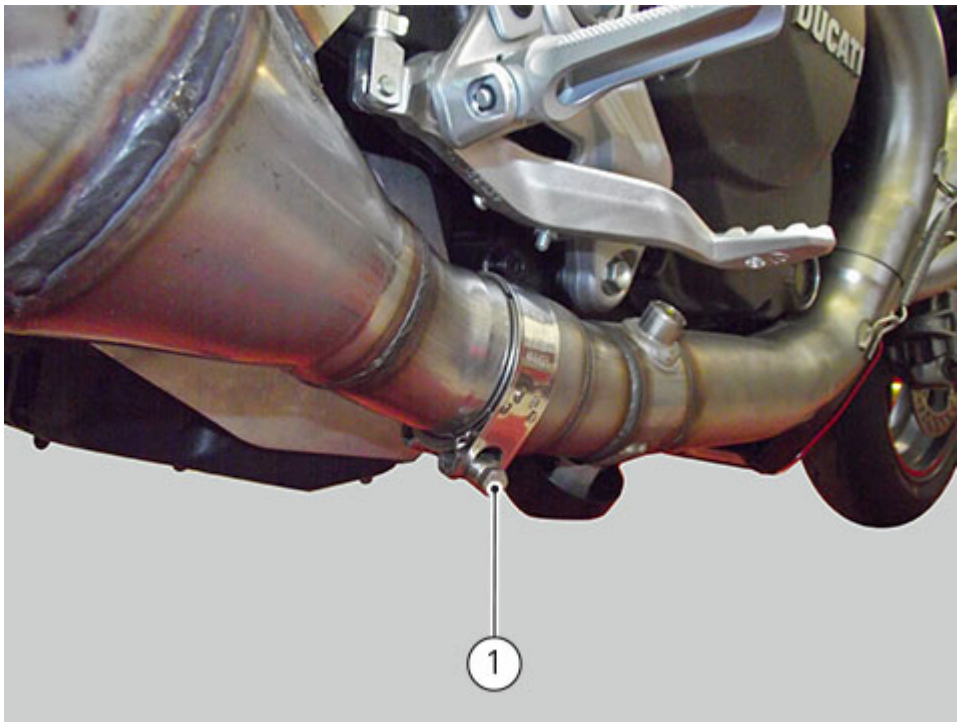
DUCATI
1

Refitting the exhaust system

If previously removed, fit exhaust plugs (A) by applying the specified product.
Tighten plugs (A) to a torque of 25Nm±10% with copper washers (B).

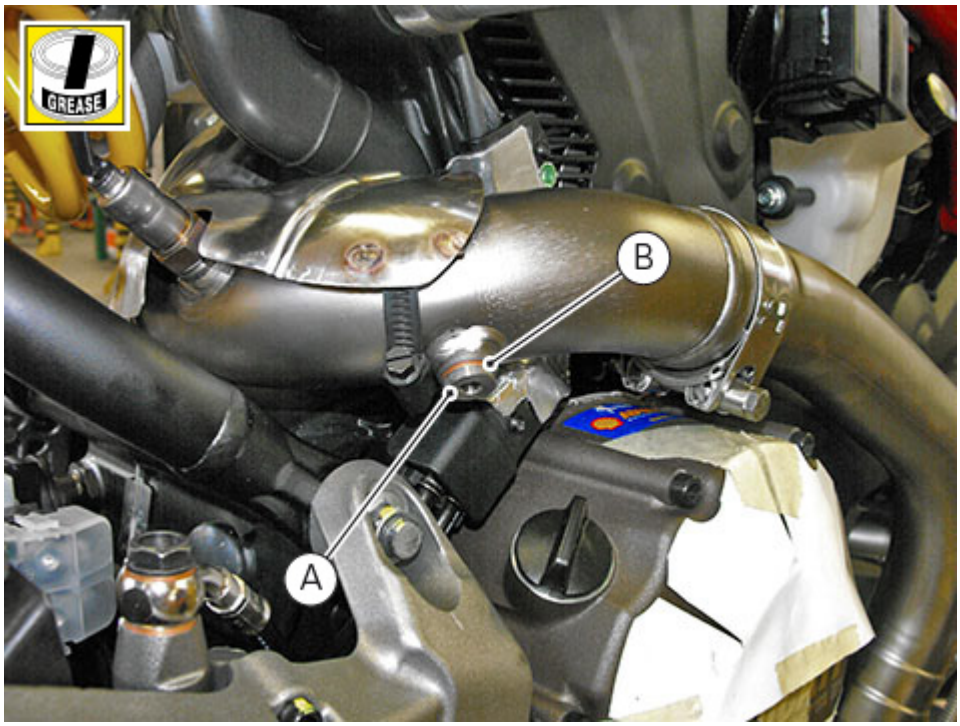

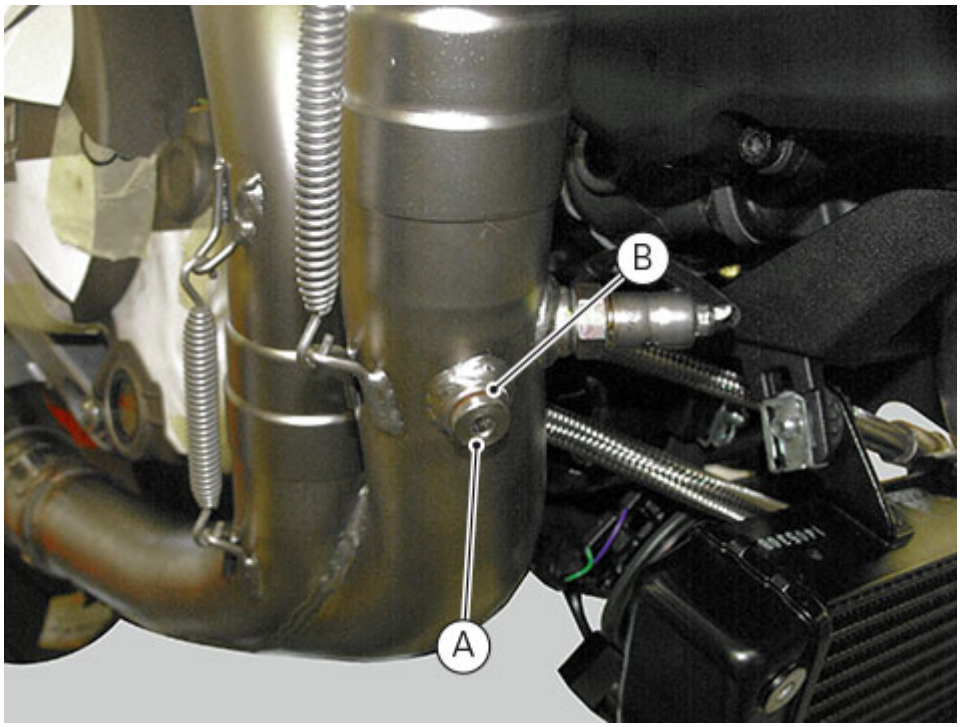

Position exhaust (16) in the horizontal cylinder and tighten the three screws (15) to a torque of 10Nm ± 10%.

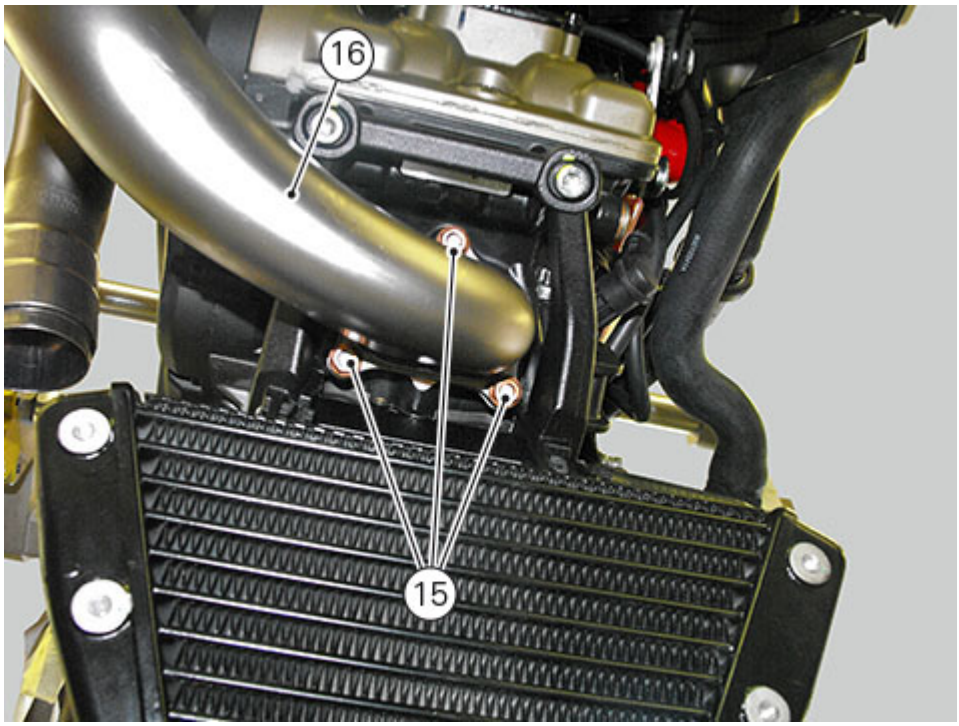

Position exhaust (14) in the vertical cylinder and tighten the three screws (13) to a torque of 10Nm±10%.

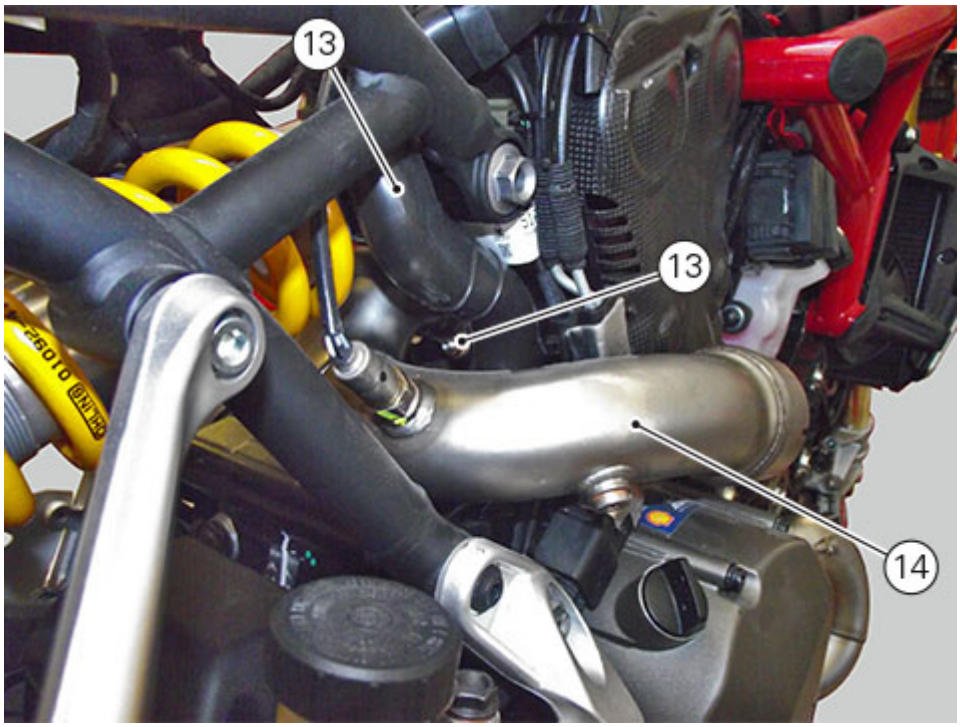

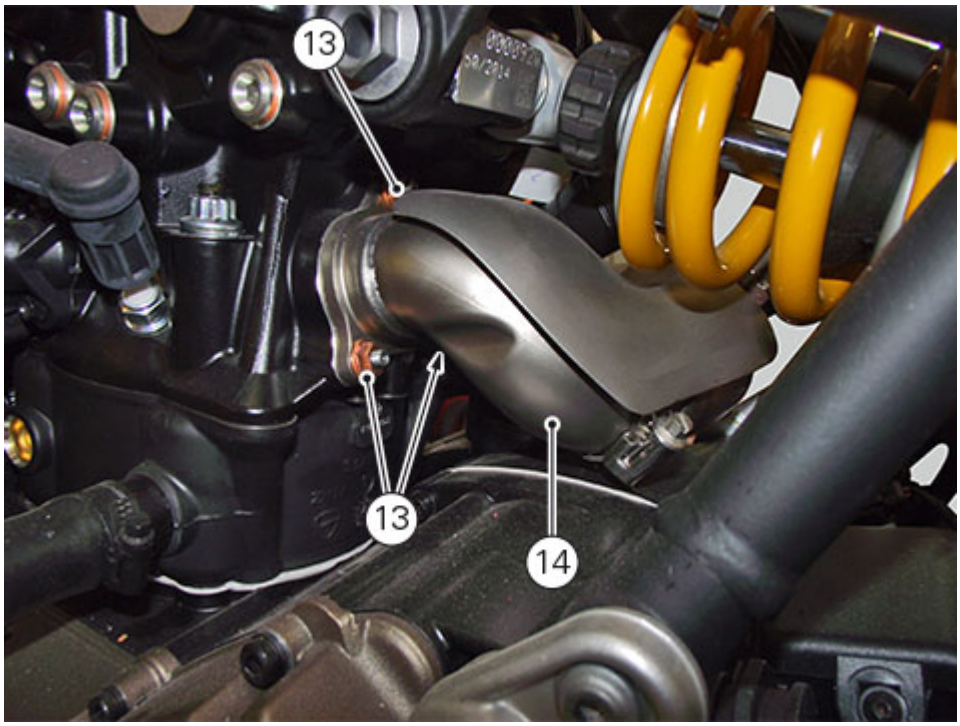

Position the oxygen sensor and tighten it to a torque of 25Nm±10%.
Insert heat guard (11) by tightening the two clamps (10).

Note
Position the clamp head in the highest point.

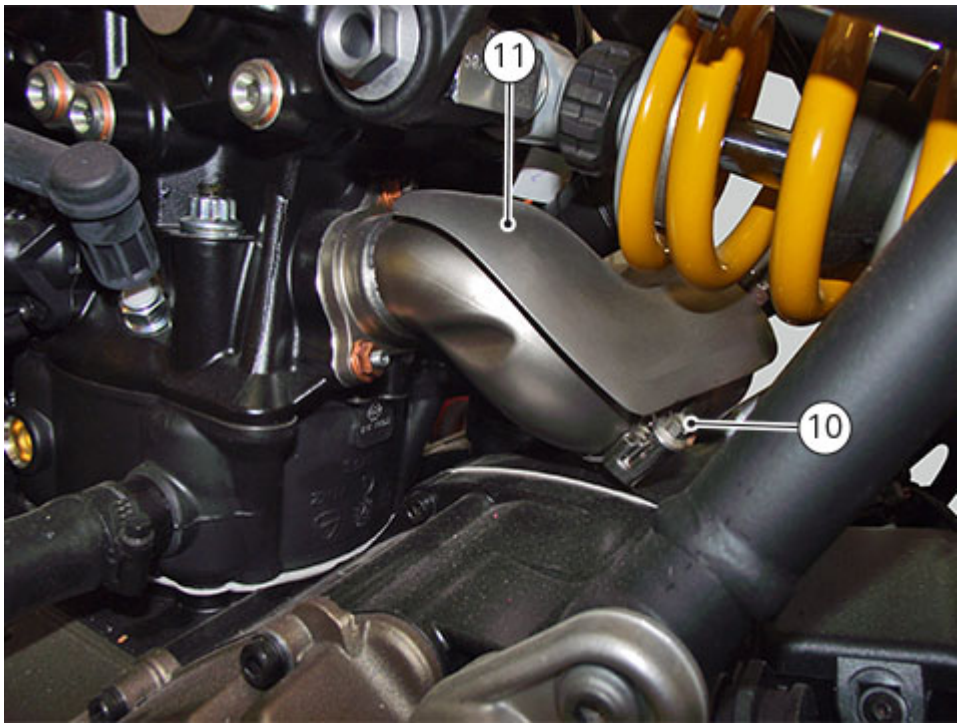

Insert the two primary pipes of exhaust (18) and (19) and fix them by means of two springs (9).

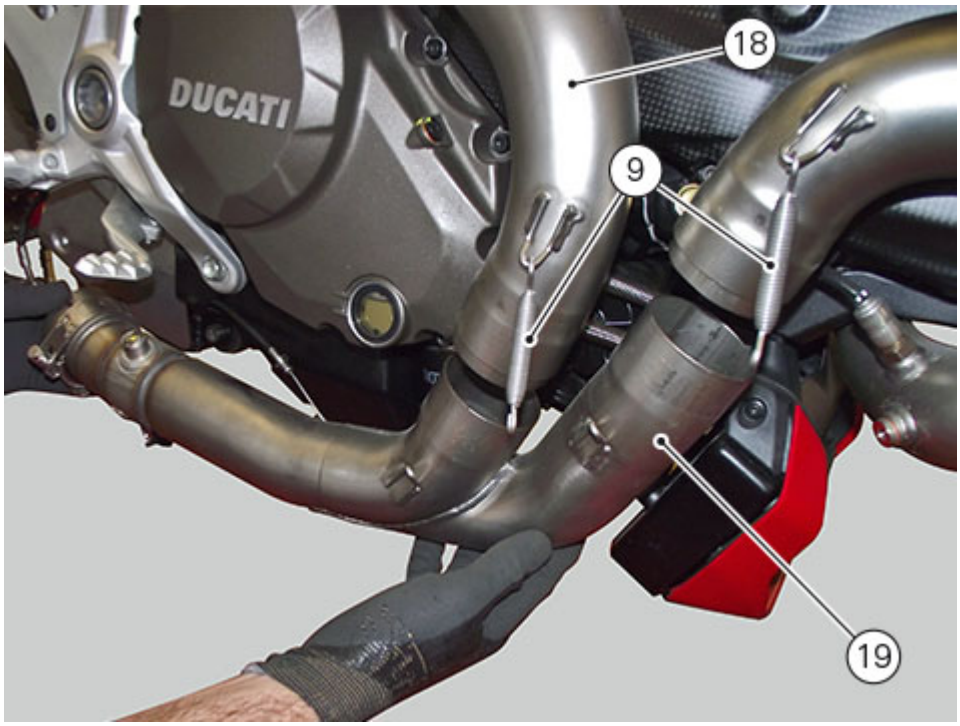

Refit the exhaust silencer (Refitting the silencer).

Note
Upon coupling with the manifold, push the primary of the vertical head exhaust as much as possible towards the engine.

Fix the oxygen sensor of the horizontal cylinder (17) to a torque of 25Nm±10%.



Tighten clamp (8) to a torque of 18Nm ±10%.

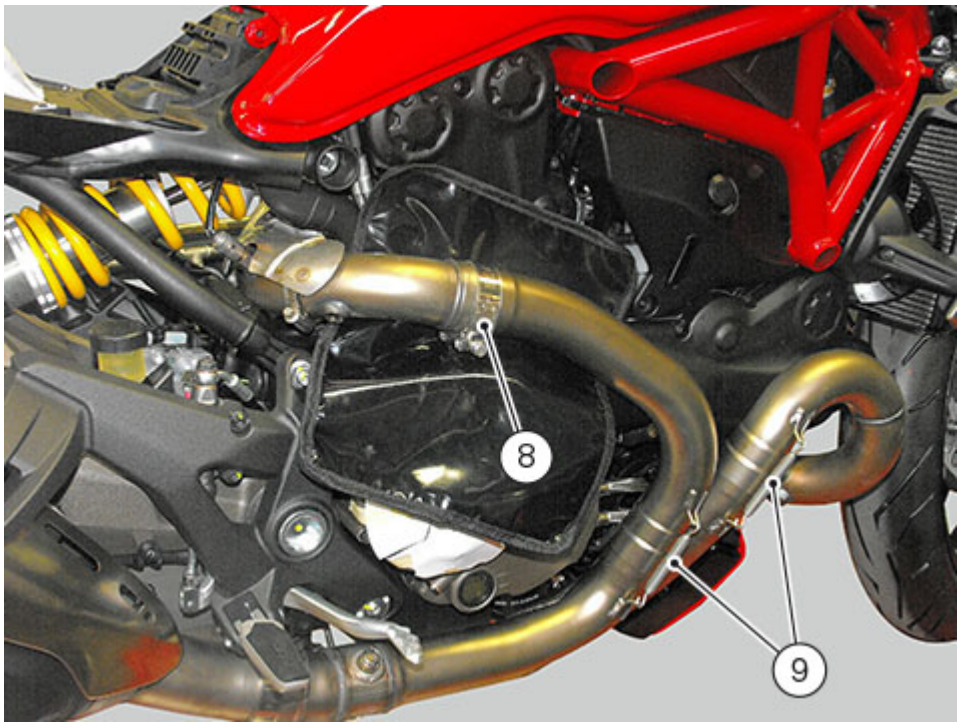

Tighten clamp (1) to a torque of 18Nm ±10%.

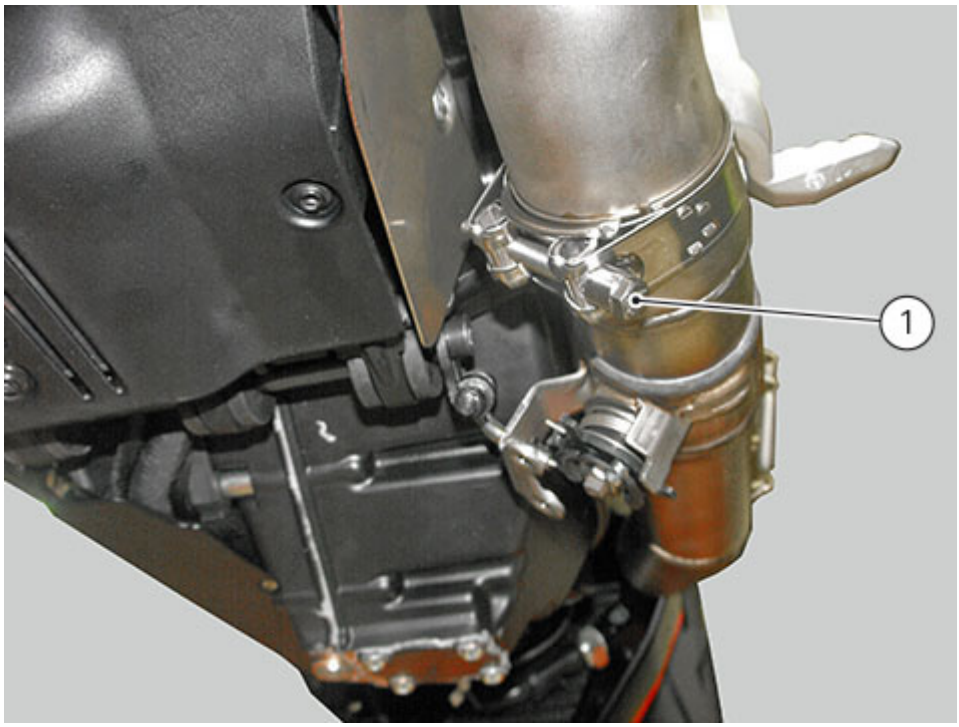

Note

Upon coupling with the manifold, push the primary of the vertical head exhaust as much as possible towards the engine.

Position heat guard (6) as shown in the figure and tighten clamps (7) to a torque of 10Nm±10%.

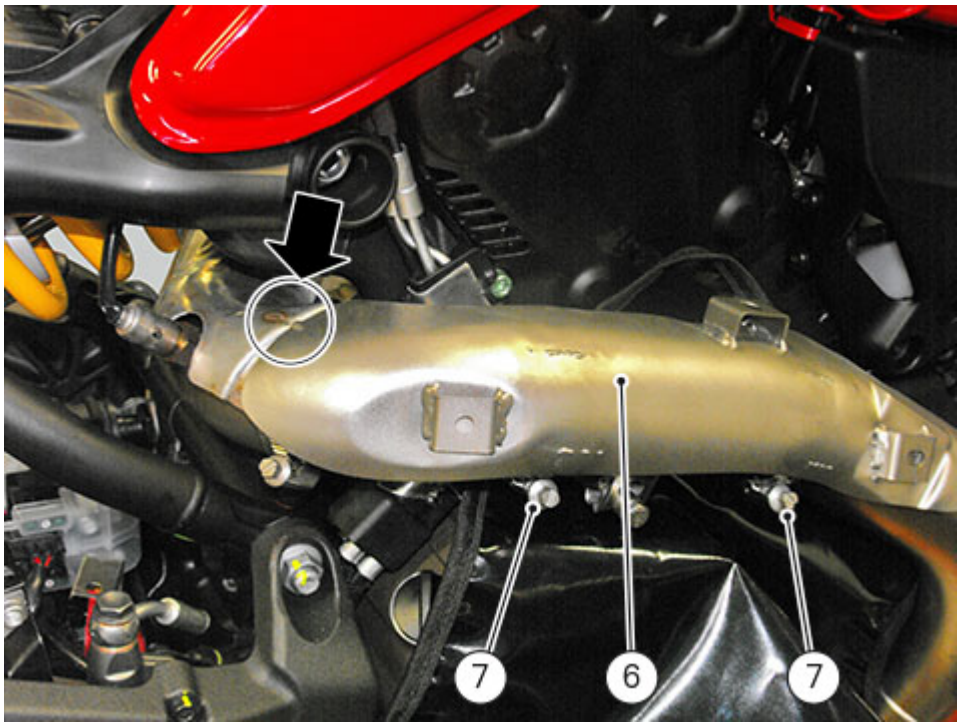

Insert cable (3) in the exhaust valve by rotating pulley (B).

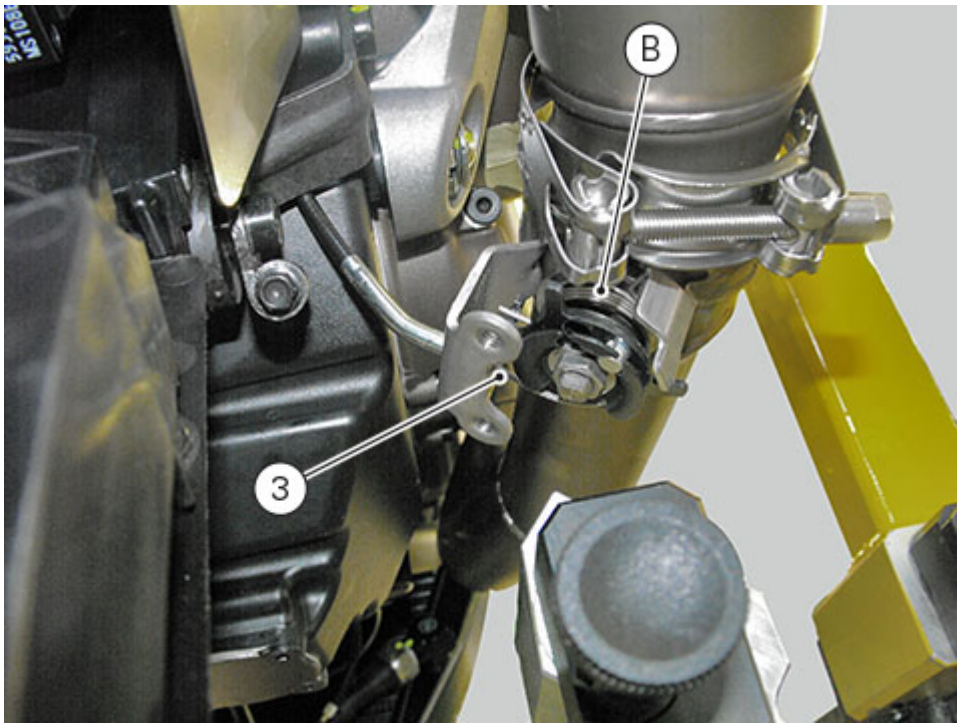

Secure the control cable with circlip (1).

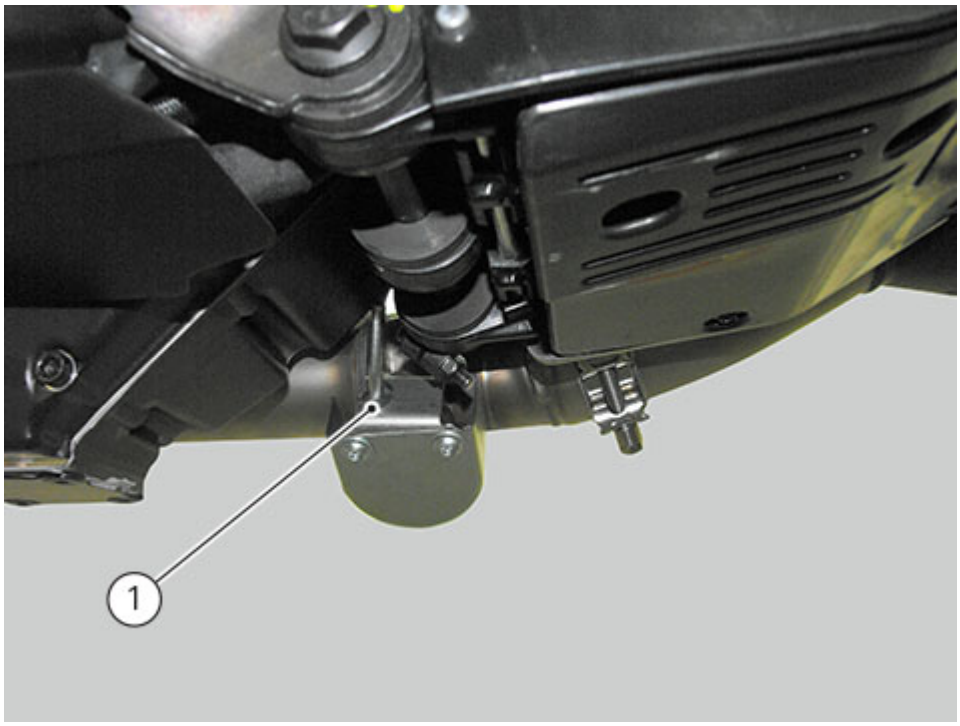

Fit the exhaust valve cover (A) and tighten screws (2) to a torque of 8Nm±10%

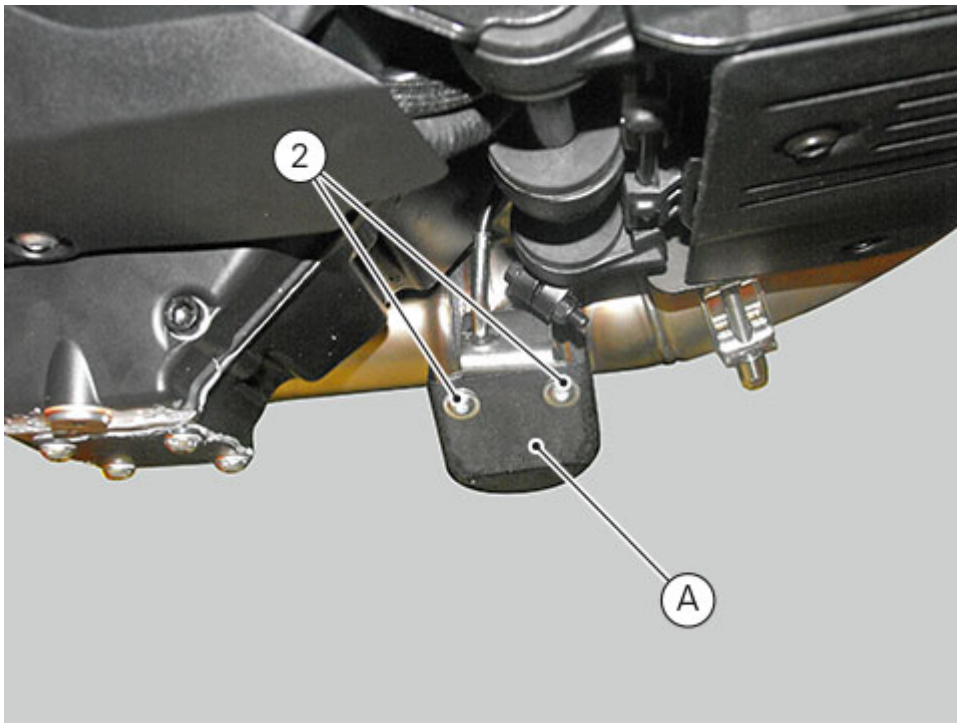

Fit heat guard (5) and tighten the three screws (4) to a torque of 10Nm±10%.

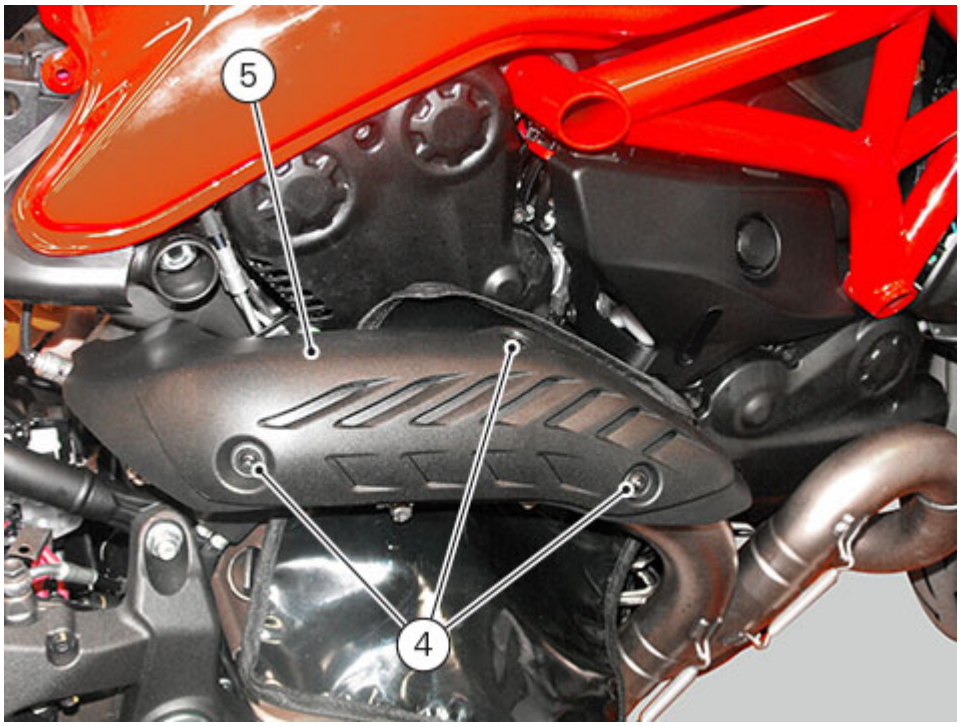

Pre-assemble the heat guard as shown in the figure.

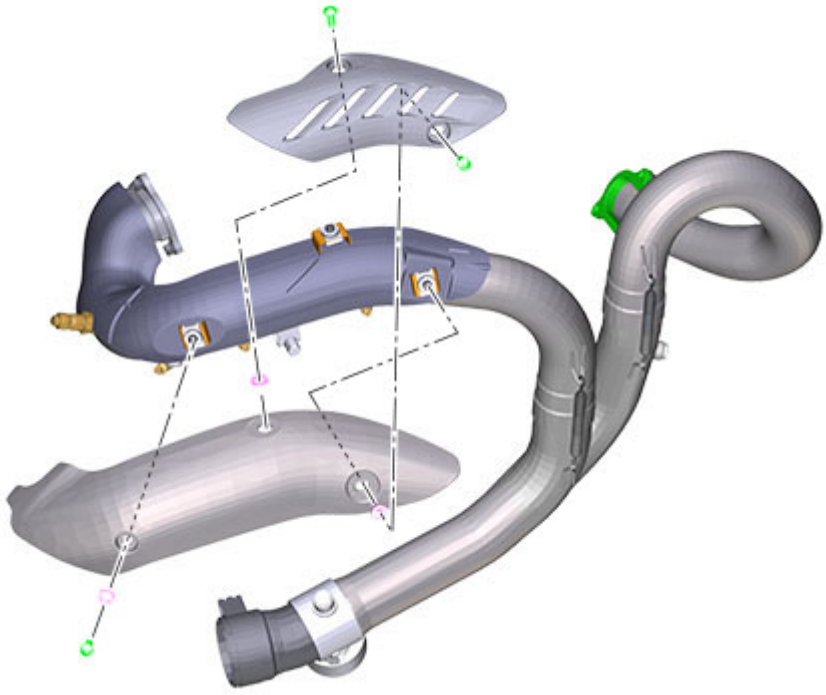

Removing the exhaust system

Remove the exhaust silencer (Removing the silencer).
Remove circlip (1).
Remove guard (A) by loosening the two retaining screws (2).

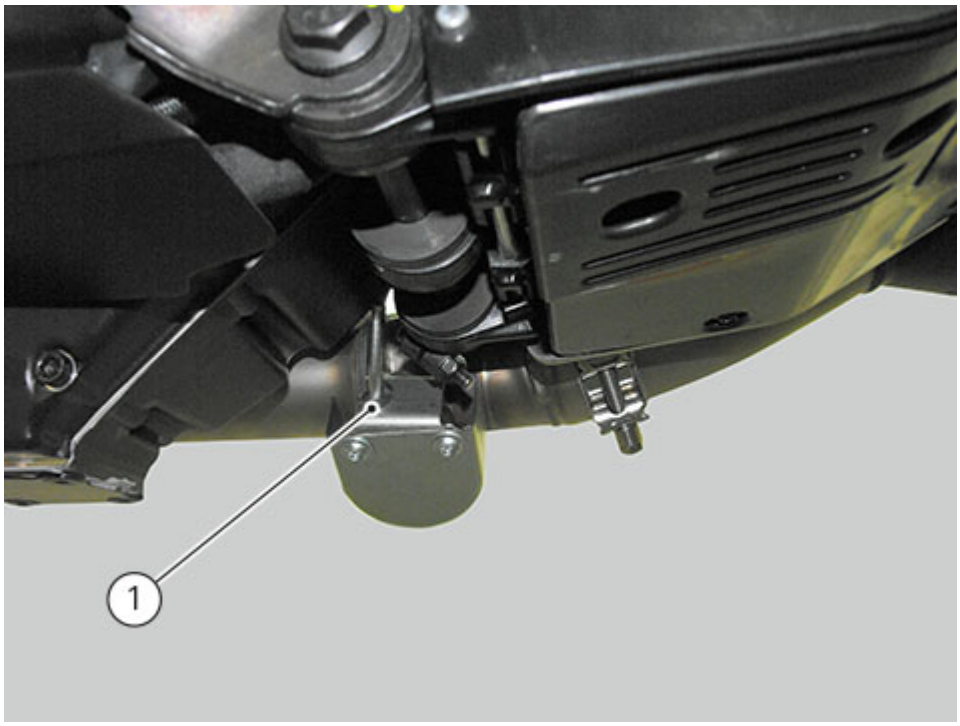

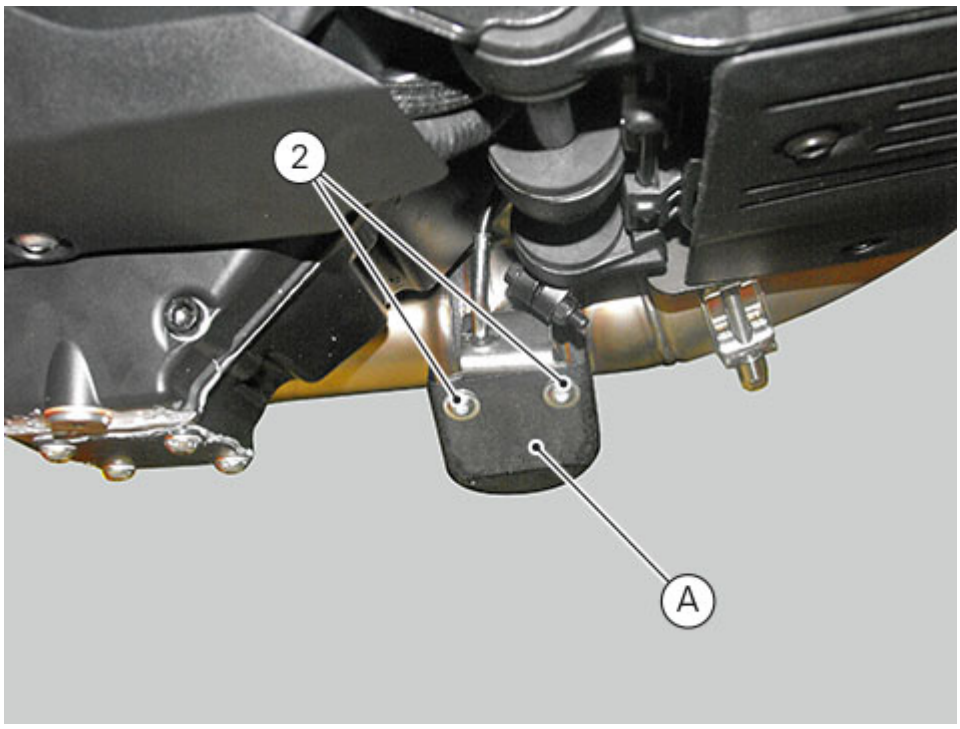

Turn the pulley (B) of the exhaust valve to facilitate the control cable (3) exit.
Slide out from the pulley (B) the control cable (3).

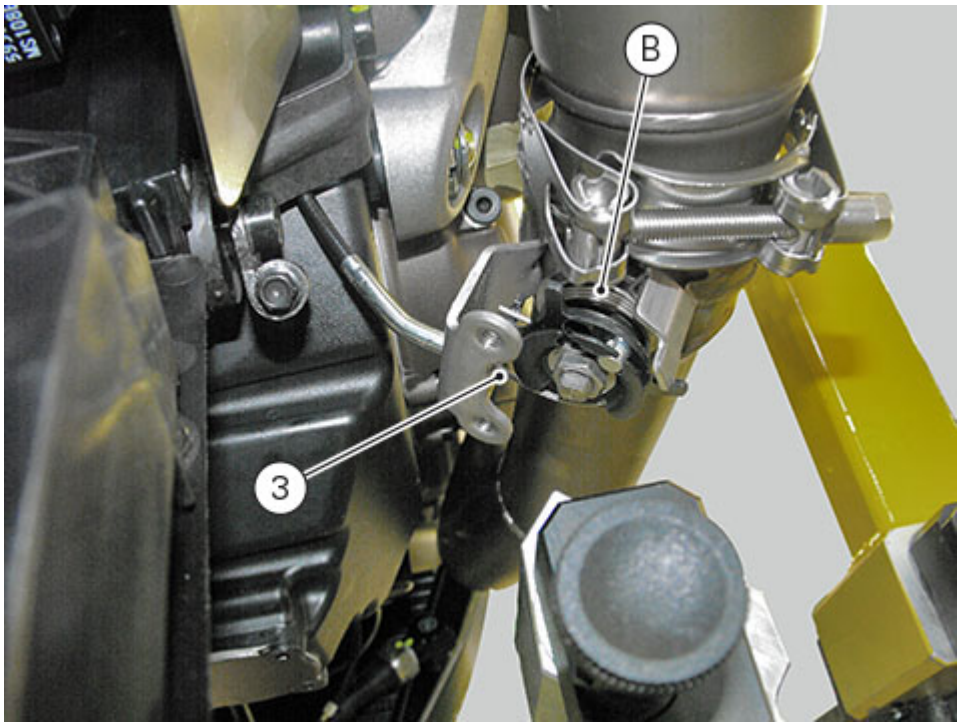

Remove the upper retaining screw of the rear shock absorber and lower the swinging arm.
Undo the three retaining screws (4) of the heat guard.
Remove heat guard (5).

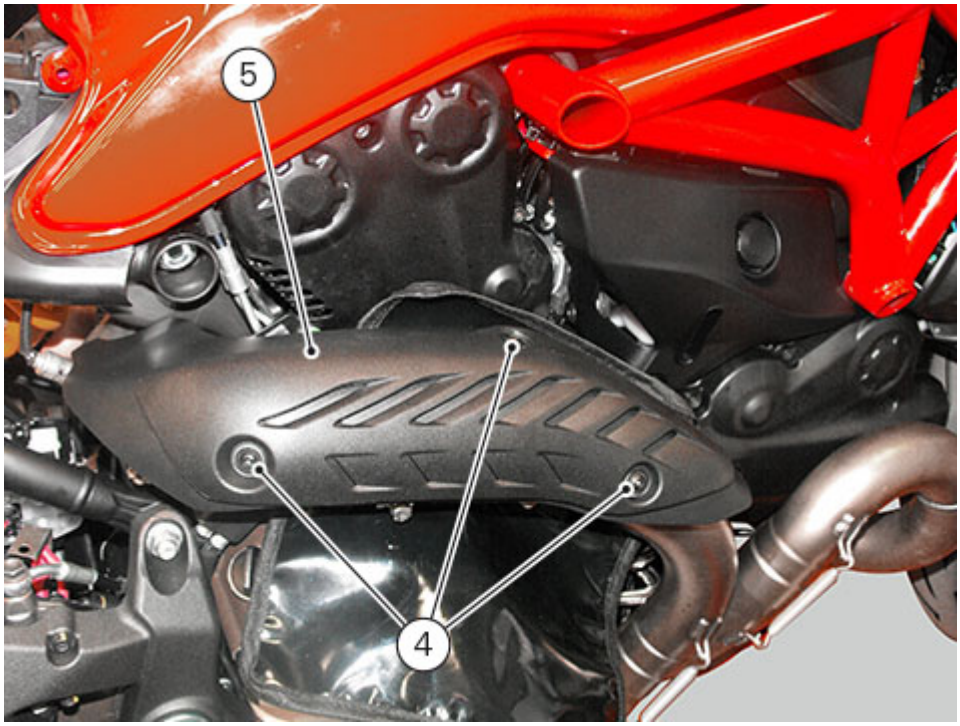

Undo clamps (7) and remove the heat guard support (6).

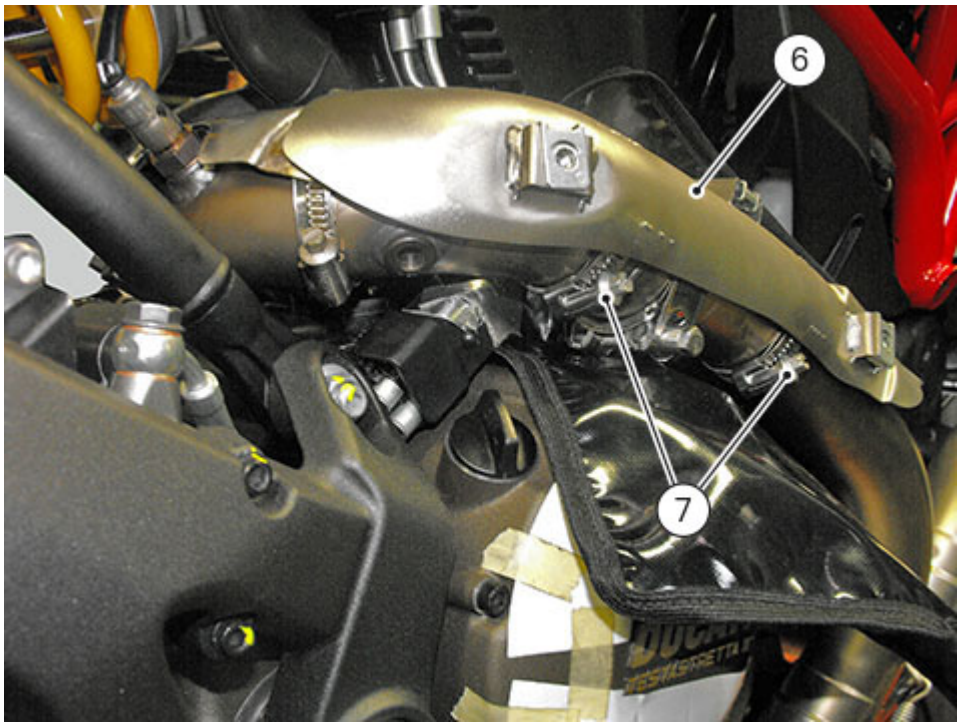

Loosen clamp (8) and remove the two retaining springs (9).

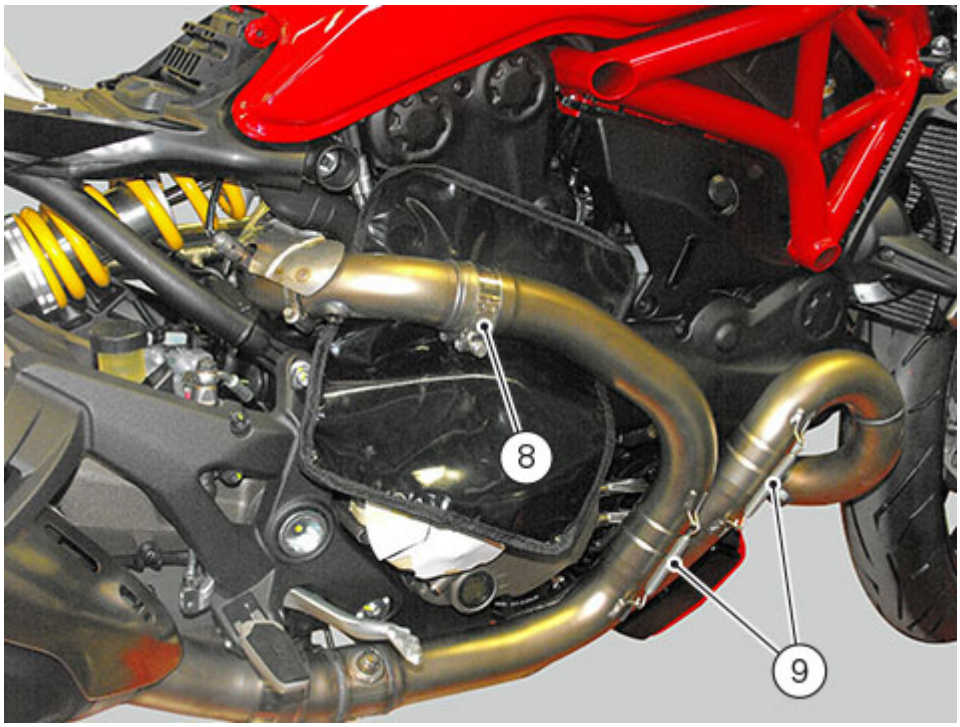

Loosen the two clamps (10) and remove heat guard (11) of the vertical head exhaust.
Remove oxygen sensor (12).

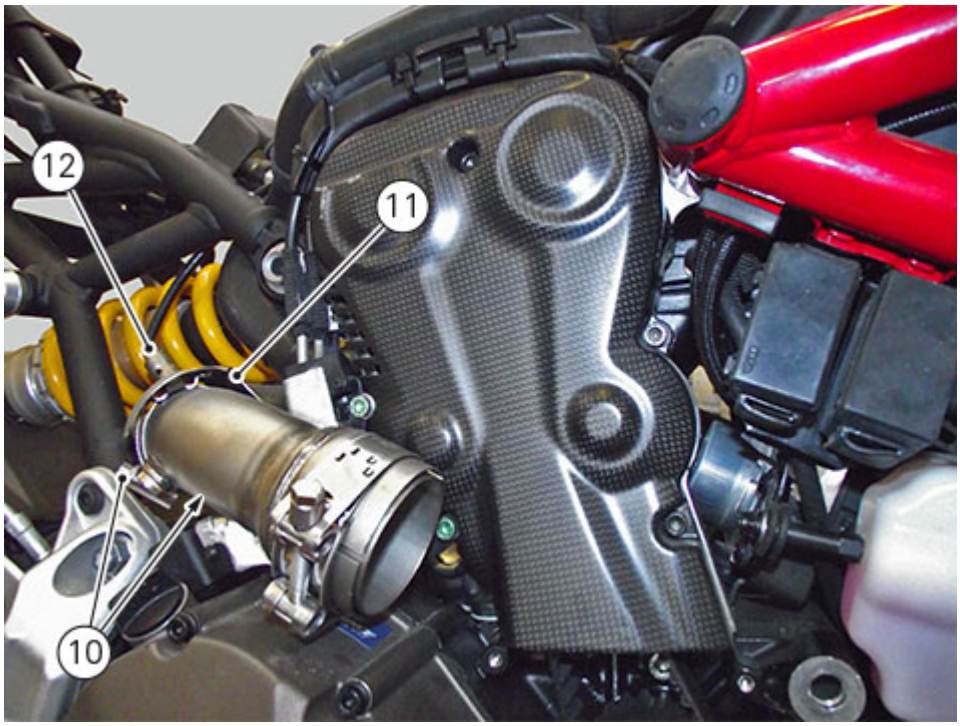

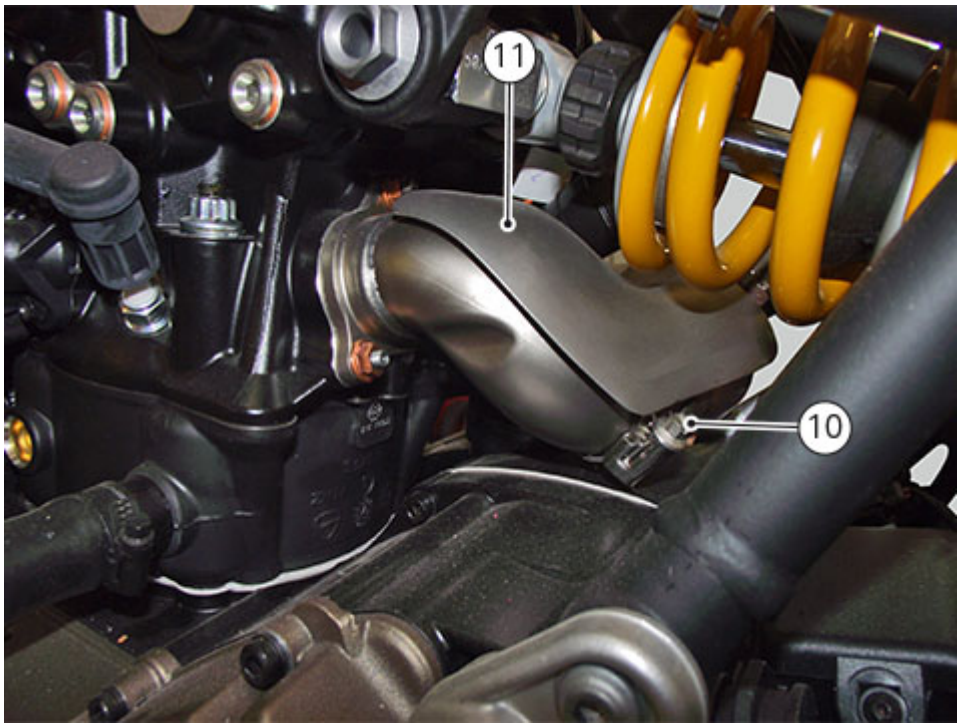

Loosen the three screws (13) of the vertical cylinder manifold (14).
Remove manifold (14).

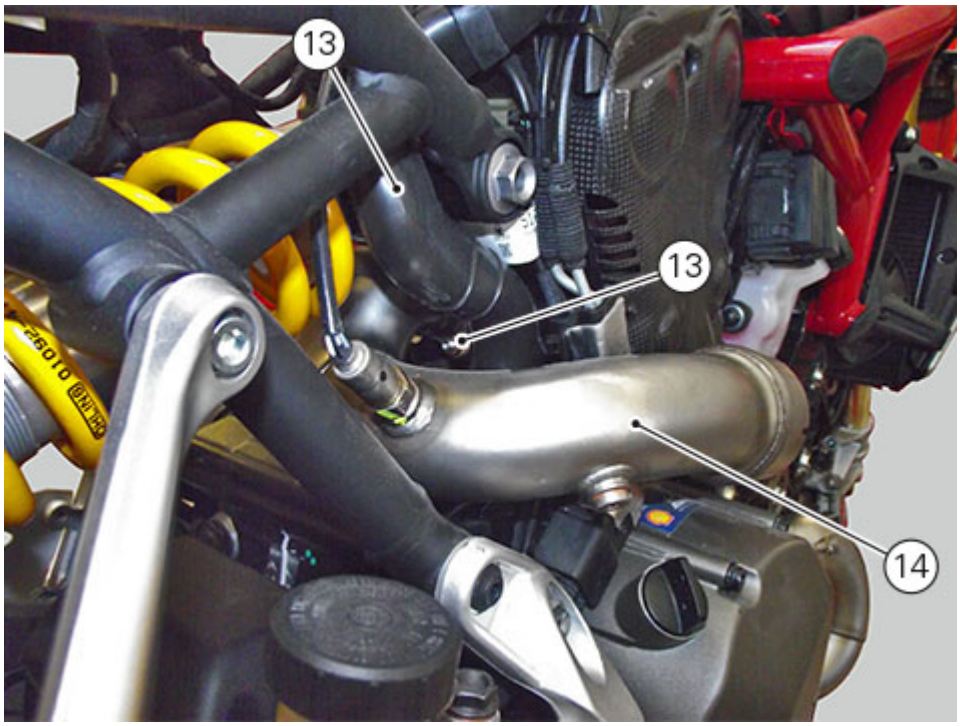

Working on the horizontal cylinder, loosen the three retaining screws (15) of manifold (16).

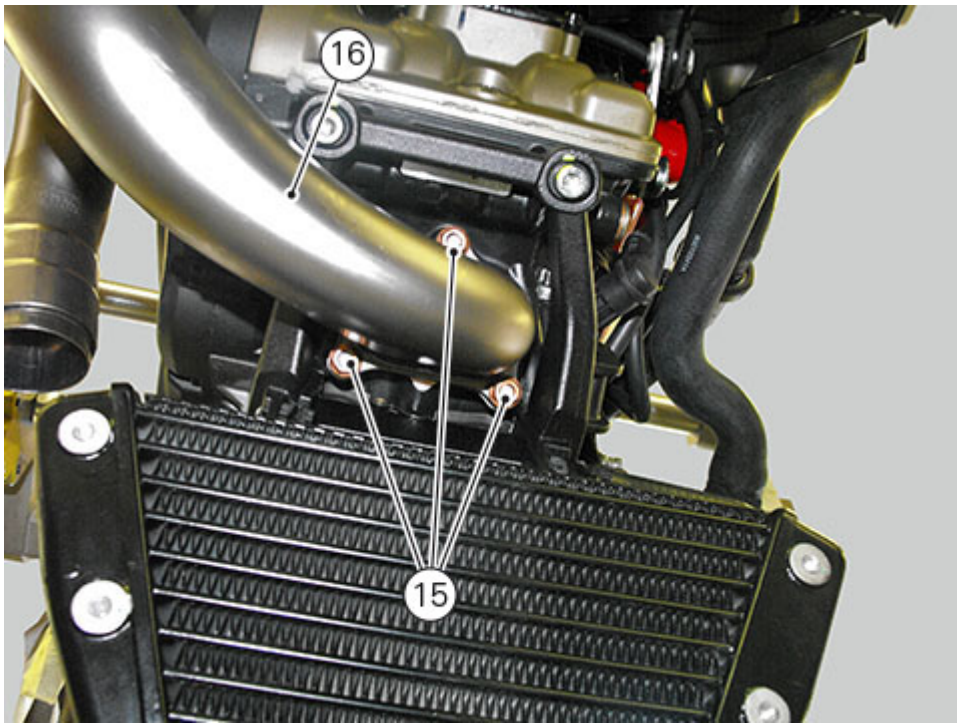

Remove oxygen sensor (17).



Remove the exhaust.

Removing the silencer

Loosen the clamp (1).

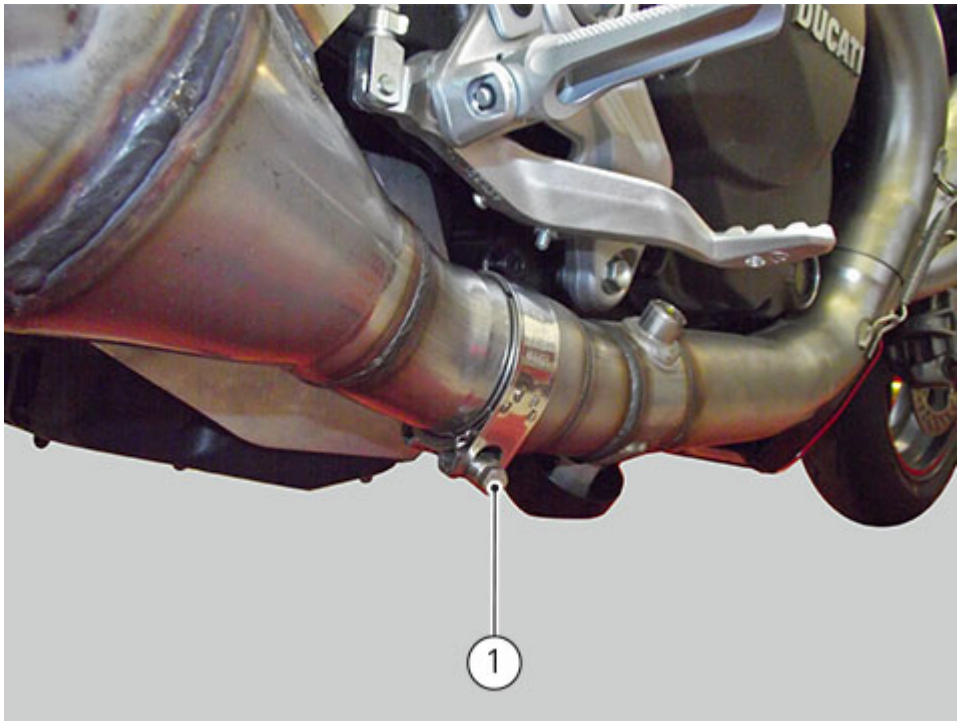

Loosen screw (2) that retains the silencer to footpeg holder plate (3) and collect bushing (4) and rear nut (5). Remove the silencer.

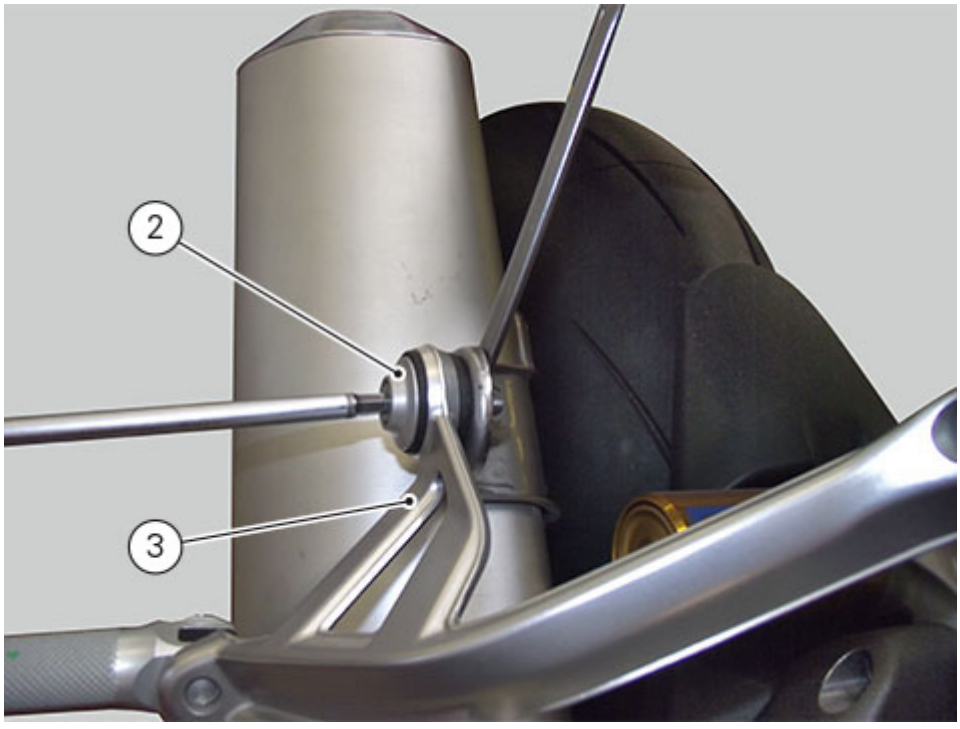

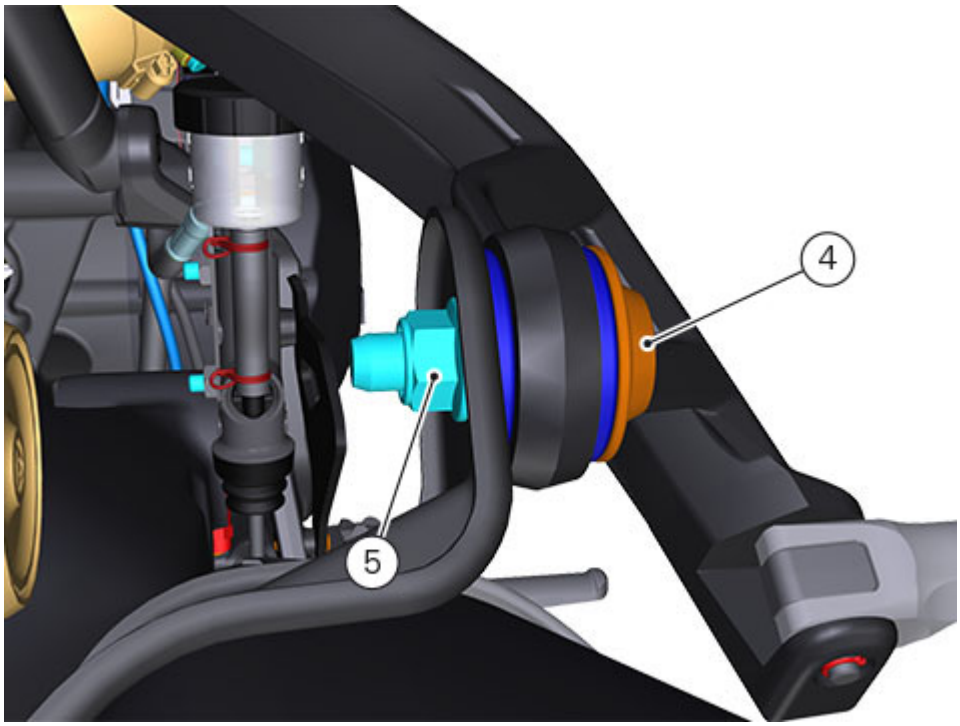
4
5

Refitting the Canister filter

Position hoses and removed components.
1. Vapour release/tank breather hose
2. canister filter
3. Purge valve
4. vertical head intake duct
5. horizontal head intake duct
6. Filtered air outlet hose

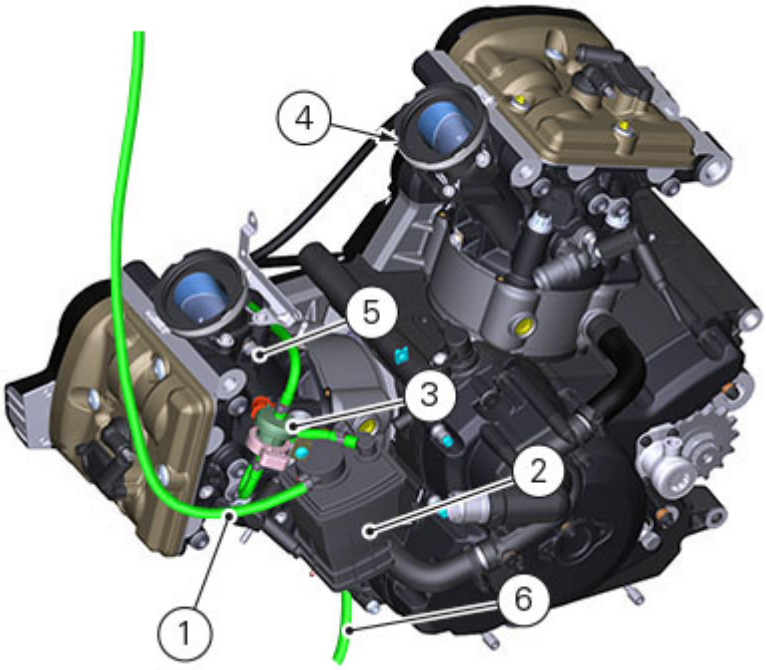

Duly restore removed ties (A), (B), (C), (D), (E), (F), (G), (H), (I), (J).

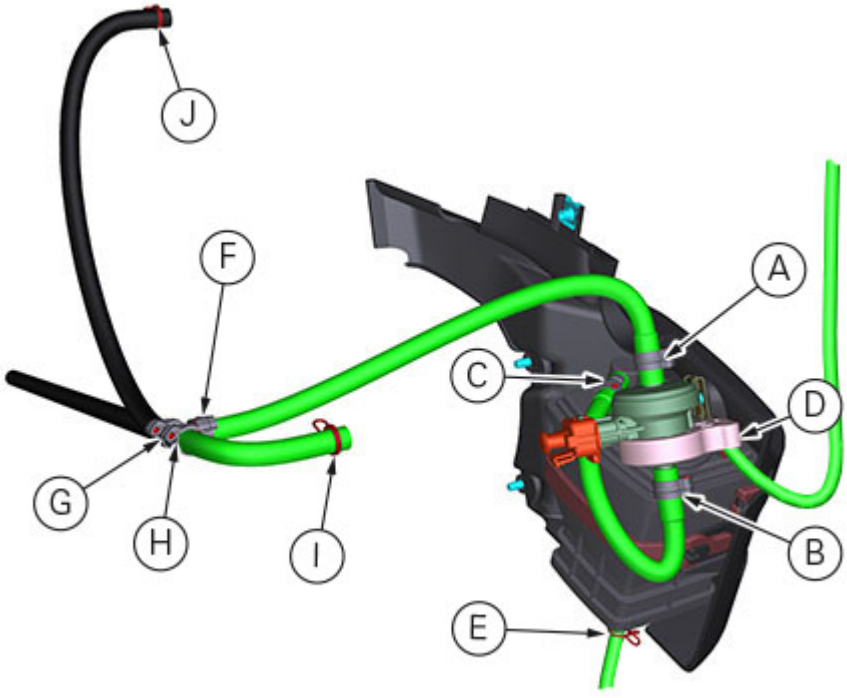

Once Canister filter (2) has been positioned inside cover (9), secure it using elastic band (10) by fastening it on hook (X), on the right side.

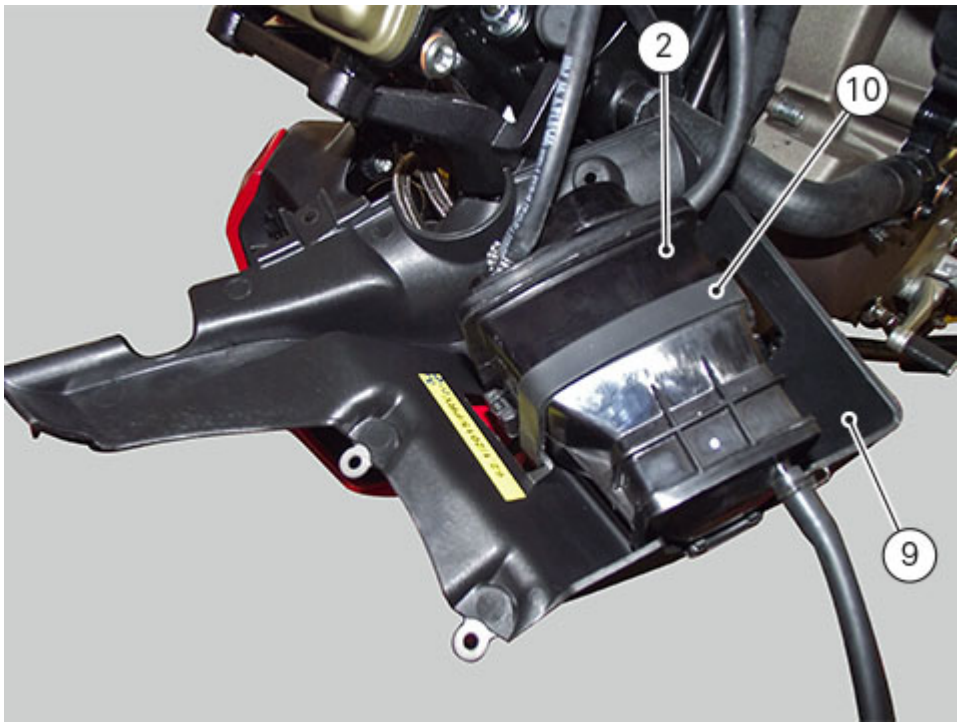

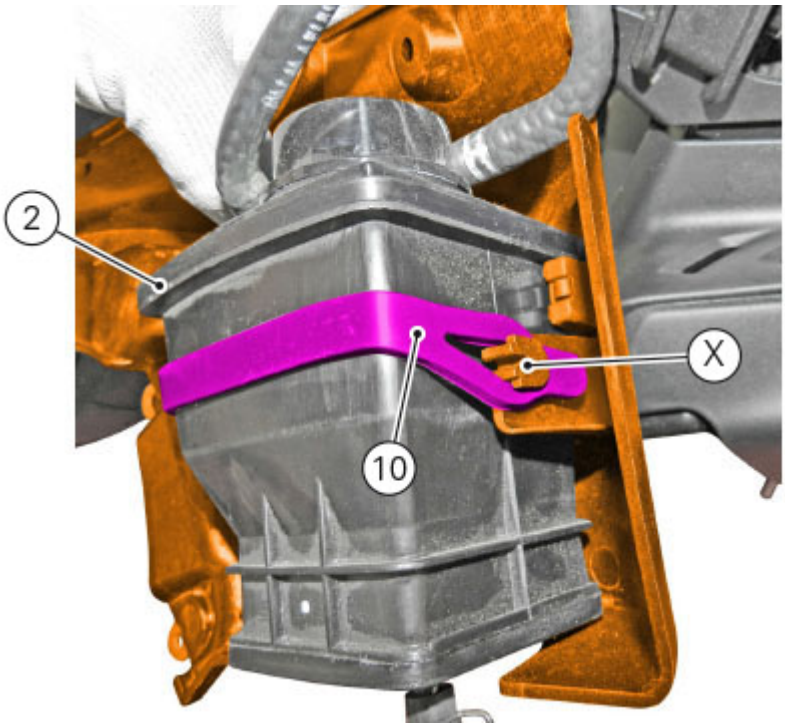

Turn cover (9) with canister filter and position it as indicated.
Take care to vapour release/tank breather hose (1) correct passage.

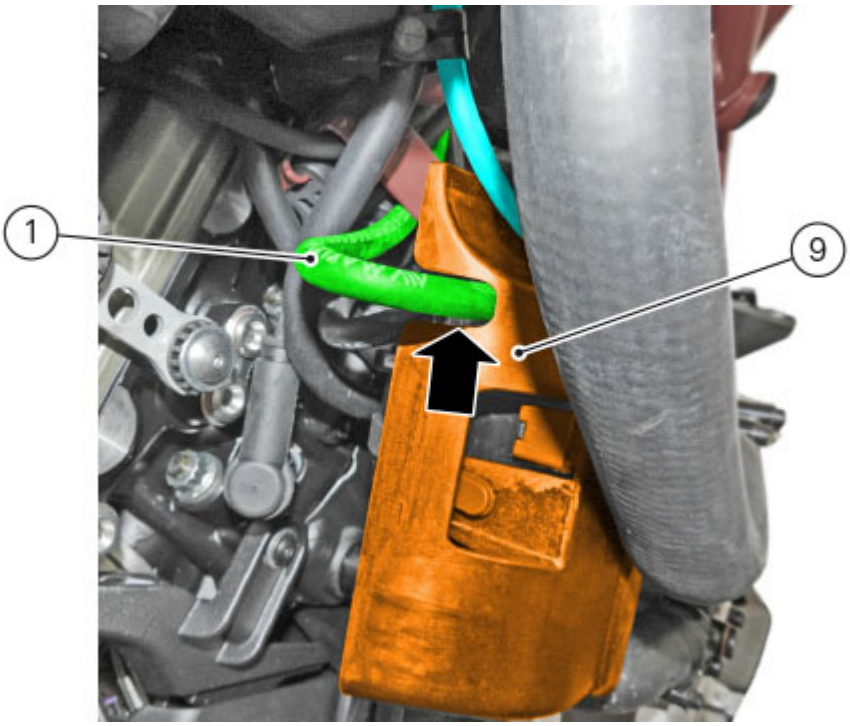

Make sure that clutch hose (Y) does NOT stay inside cover (9).

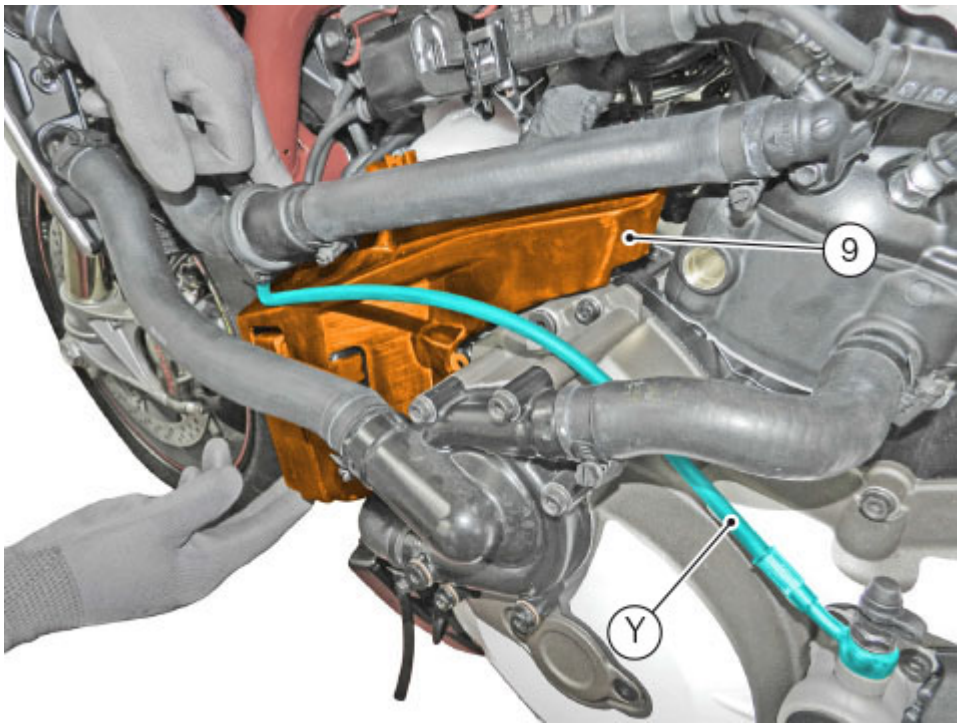

Once cover (9) has been positioned, start screws (7A), (7B) and (8).
Then tighten the two screws (7) to a torque of 5Nm±10% and the screw (8) to a torque of 4Nm±10%.

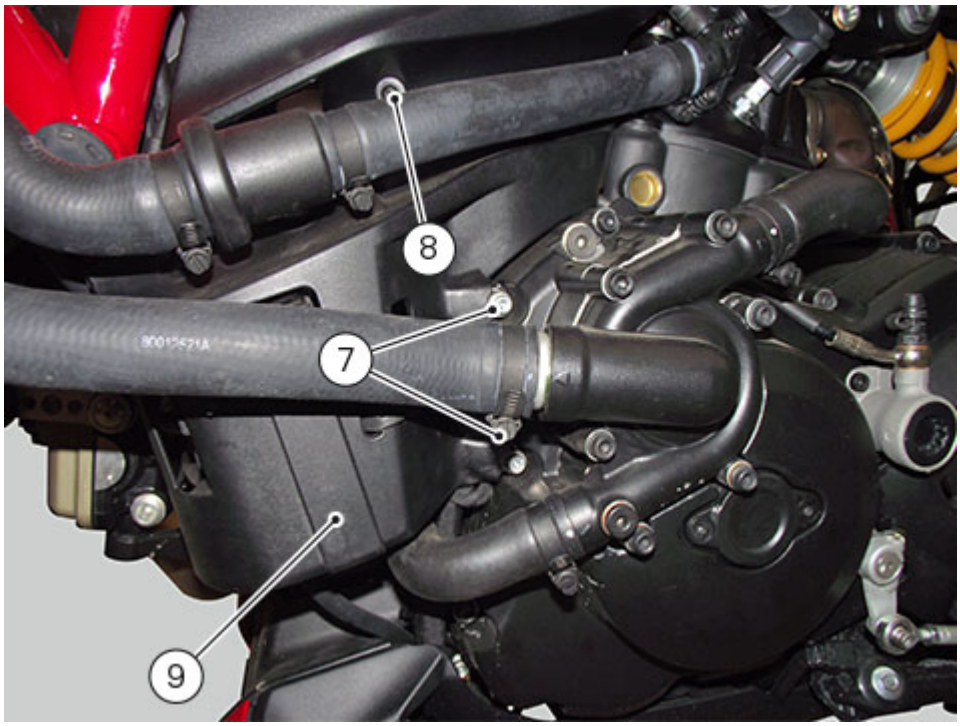
8
7
9

Removing the canister filter

Working on the LH side, loosen the two screws (7) and screw (8) retaining canister cover (9).

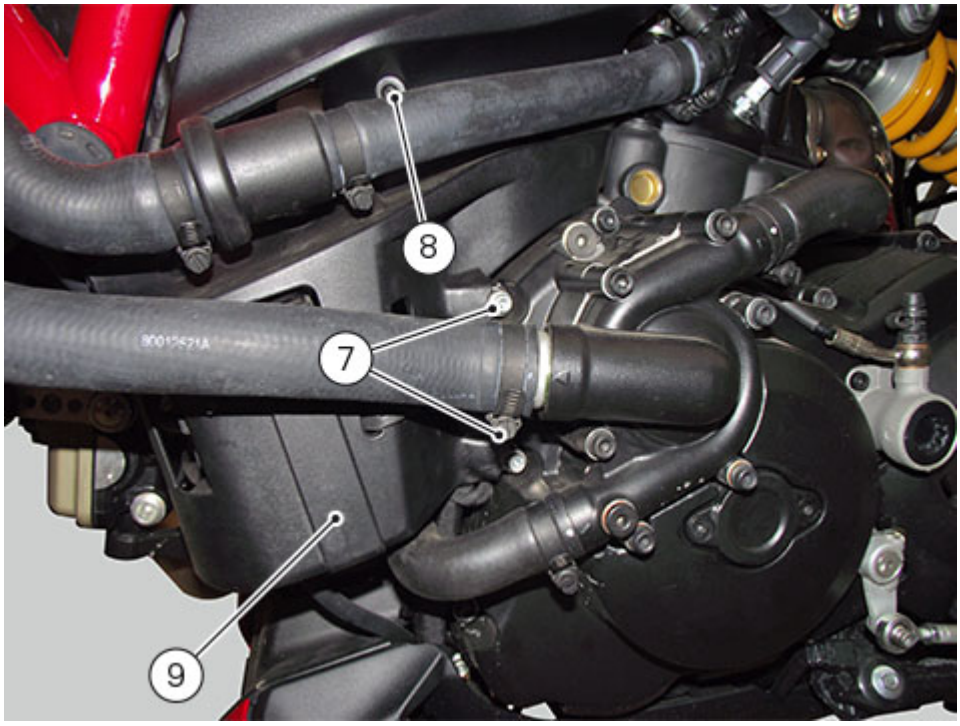

Turn cover (9) with canister filter (2) and release the retaining elastic band (10).

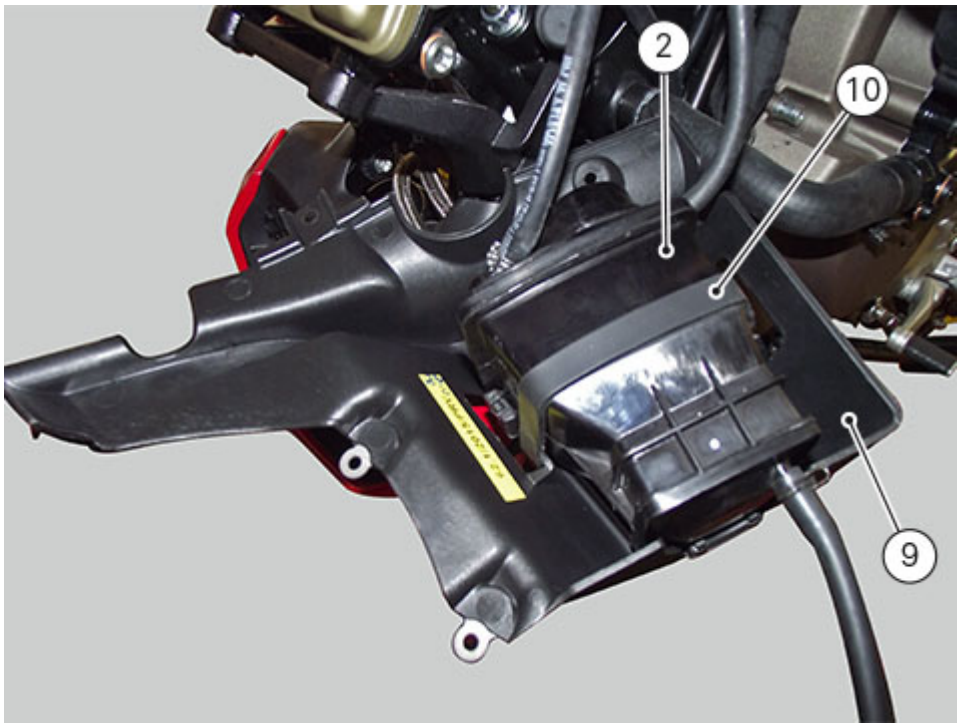

Remove ties (A), (B), (C), (D), (E), (F), (G), (H), (I), (J), so as to remove canister unit components and hoses.

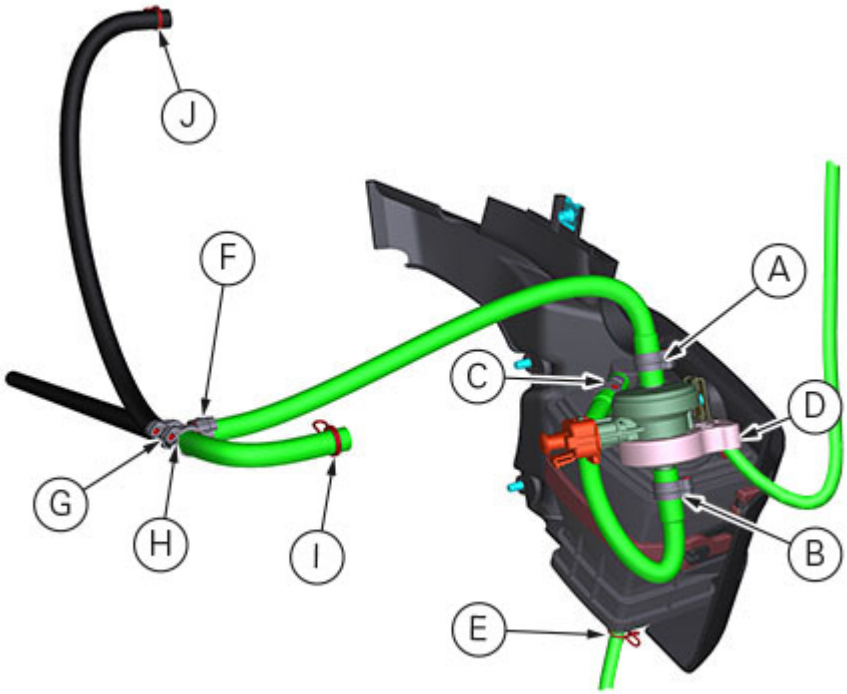
J
F
A
C
D
G
H
I
B
E

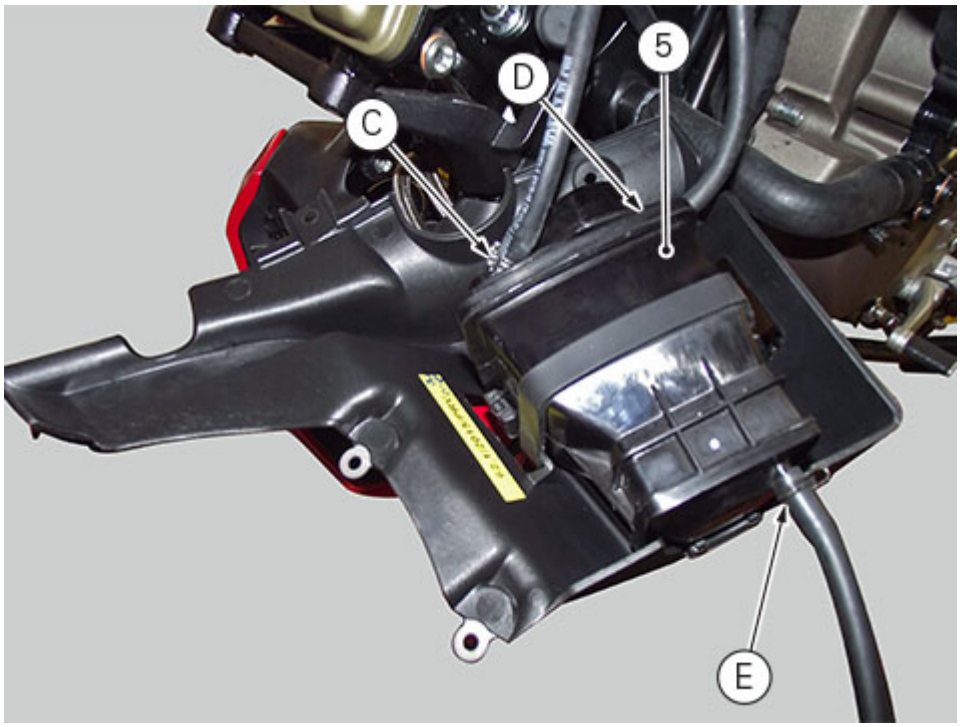
5
D
C
E

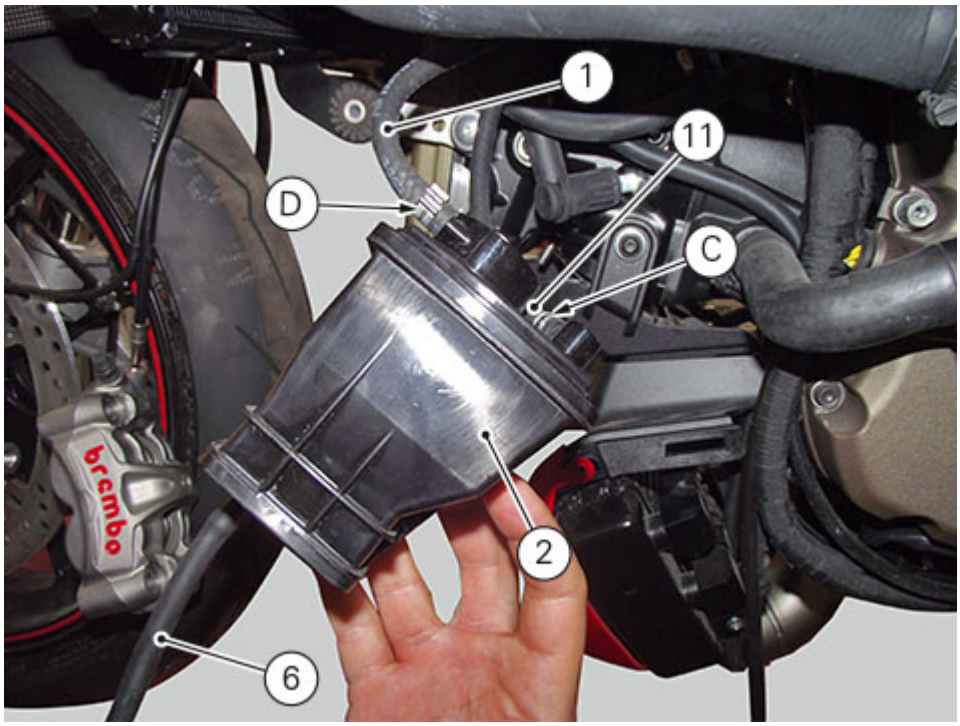
1
11
D
C
2
6
brembo

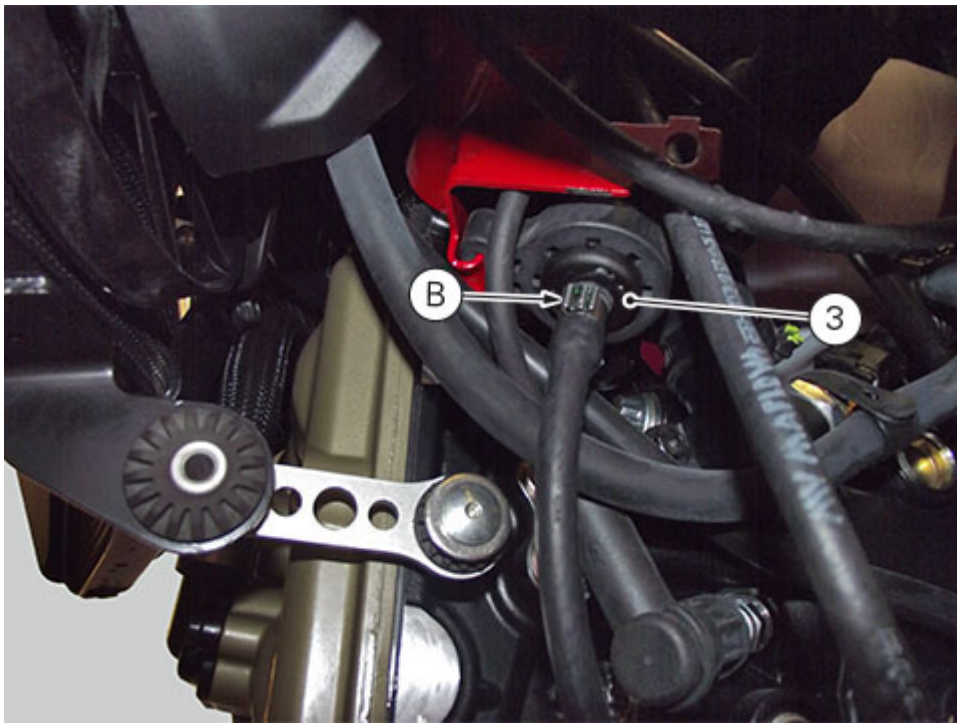
B
3

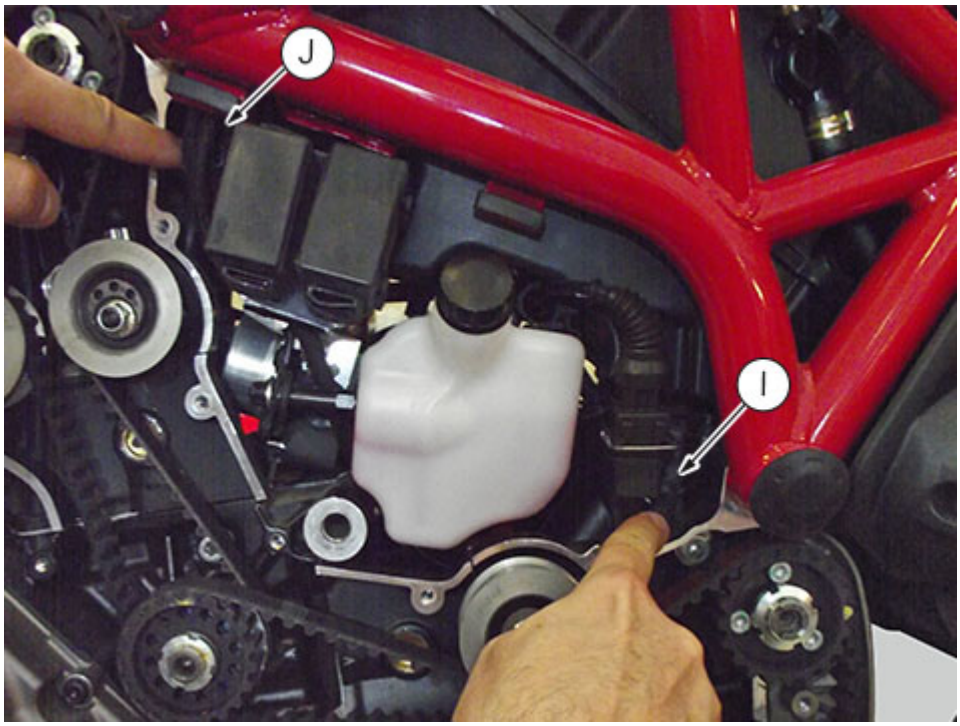
J
I

Canister filter system

The canister filter is a system that collects the fuel vapours released by the fuel tank. This filter is positioned along the tank breather tube and must keep the fuel vapours when the vehicle is not moving.
To maintain the efficiency of the active carbons, the system is active while the engine is ON. The vacuum generated in the intake manifolds makes fresh air flow through the canister filter and clean it.
The vapours generated while riding are conveyed to the intake system. To prevent the mixture from getting too rich, the pipe has a purge valve that is opened and closed according to the riding conditions.

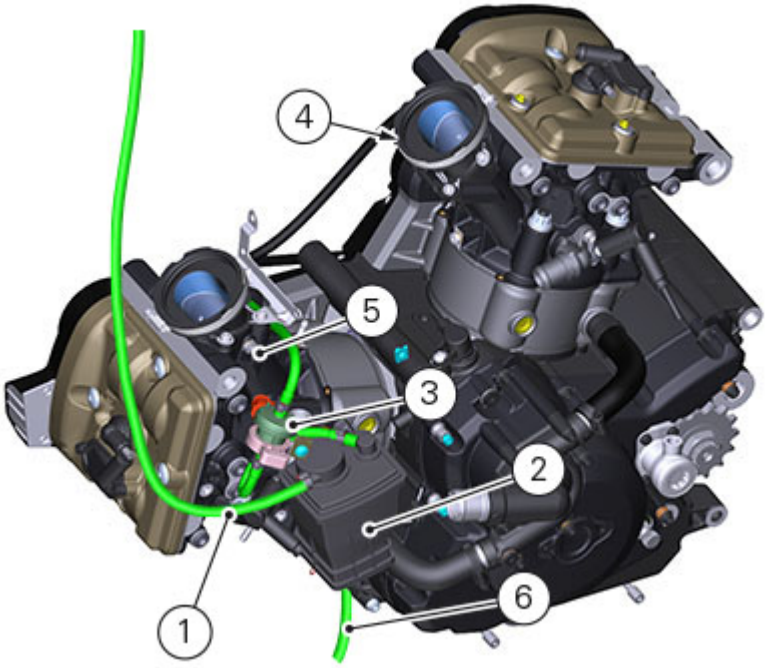

PARKED BIKE AND CLOSED PURGE VALVE

In this condition the vapours released by the tank by means of pipe (1) reach the canister filter (2). The Purge valve (3) remains closed.
Filtered air flows out of pipe (6).

MOVING BIKE AND OPEN PURGE VALVE

In this condition air flows in pipe (1) to ventilate the tank. The Purge valve (3) is open and so the fuel vapours coming from the canister filter (2) are sucked by pipes (4) and (5).
Fresh air from outside enters from pipe (6).

MOVING BIKE AND CLOSED PURGE VALVE

In this condition air flows in pipe (1) to ventilate the tank. The Purge valve (3) is closed and so there is not vapour passage through pipes (4) and (5).
Fresh air from outside enters from pipe (6).





Refitting the engine

Refit the rear swinging arm (Refitting the rear swinging arm).
Refit the rear shock absorber (Refitting the rear suspension).
After applying recommended threadlocker on thread and under the threaded pin head (1), tighten them to 90 Nm ±5%.

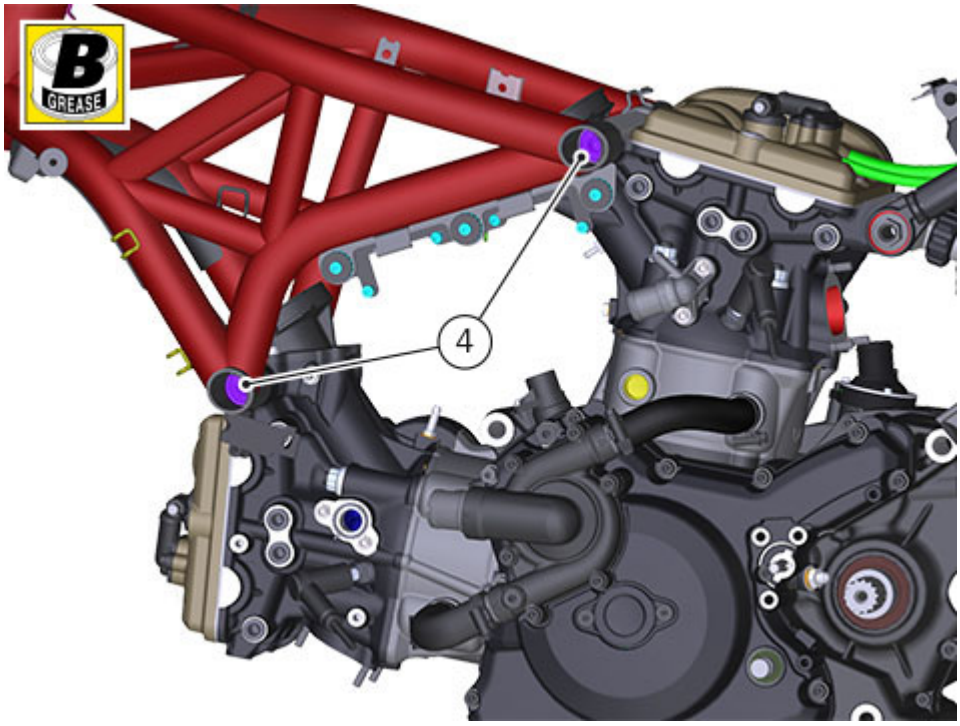

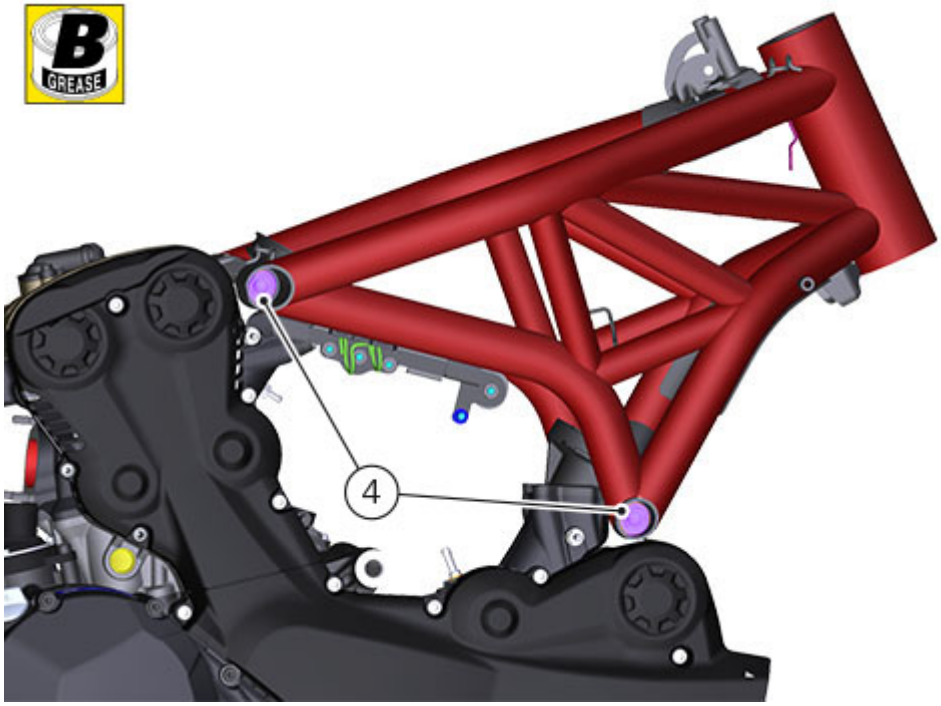

After having applied the indicated product, refit front (3A) and rear (3B) plugs on frame, working on both sides and making sure to insert them in the right direction.

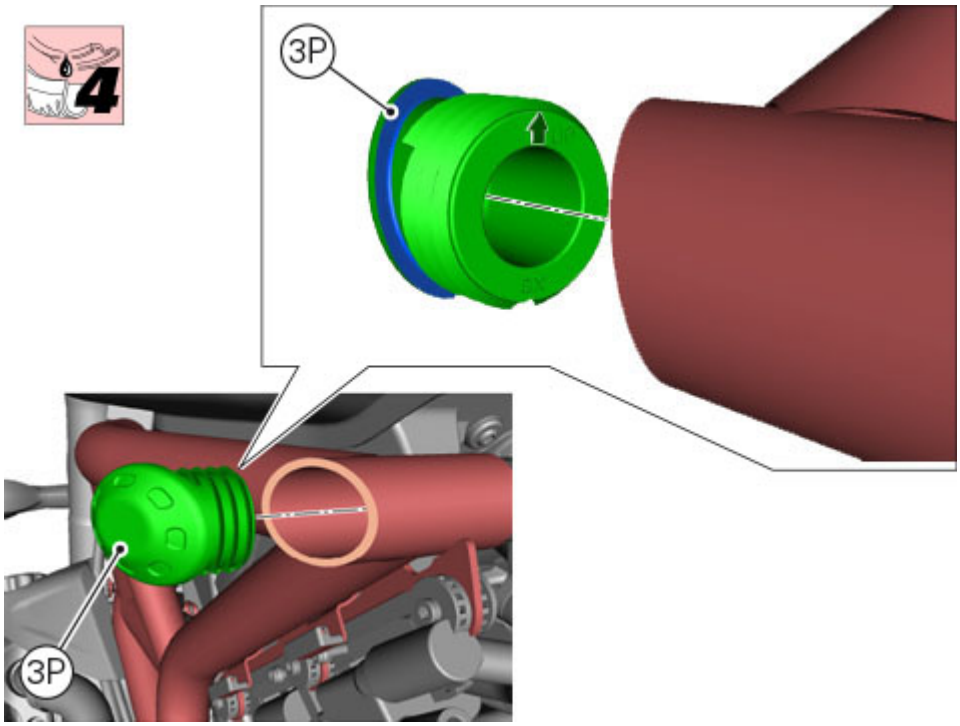
4
3P
3P


4
3A



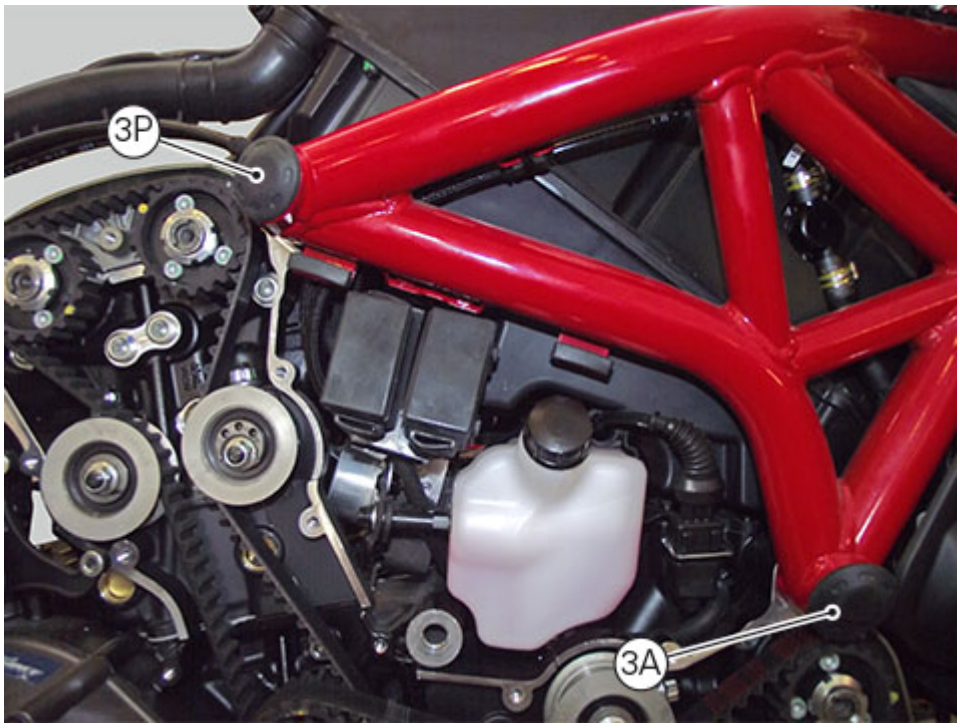

After having applied the indicated product, position rear shock absorber and tighten vertical head retaining screw (2) to a torque of 42Nm±5%.

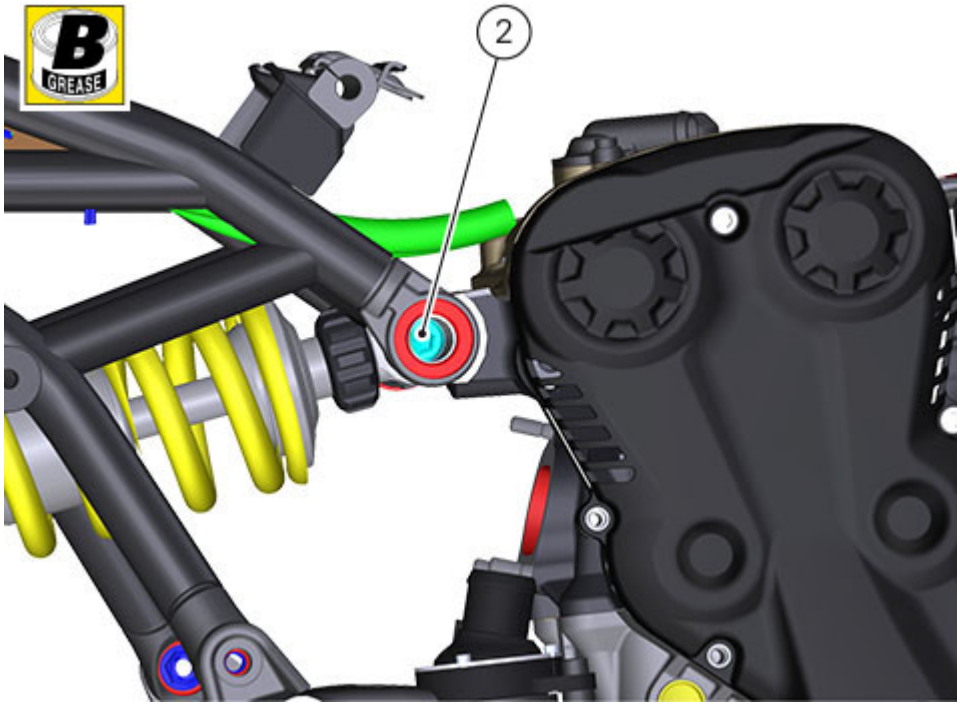

Position rear subframe and, after having applied the indicated product, start the two screws (1).

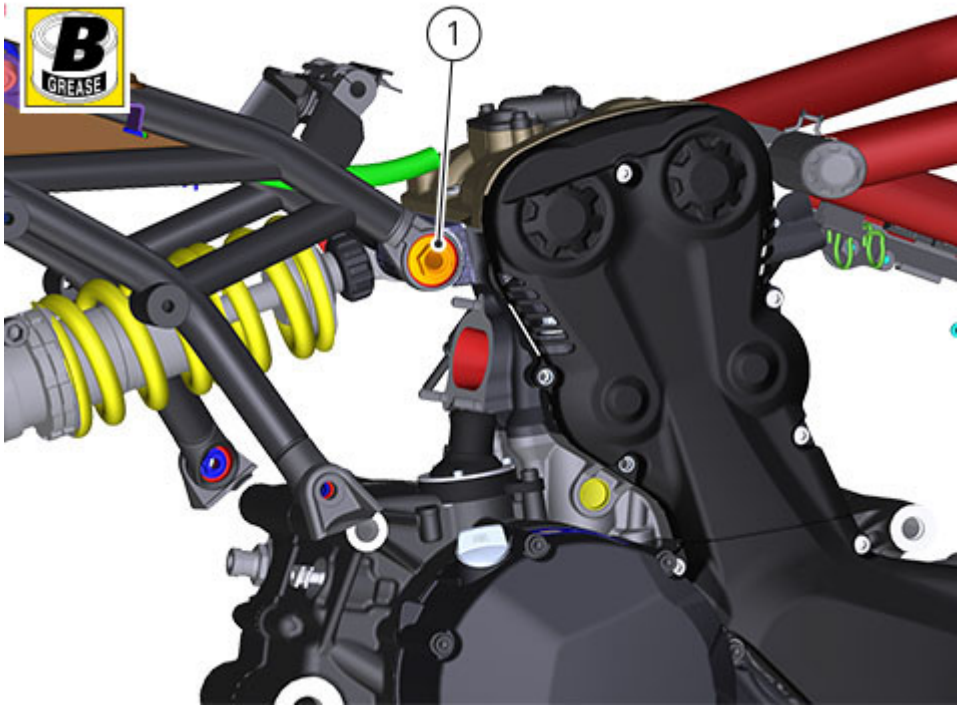

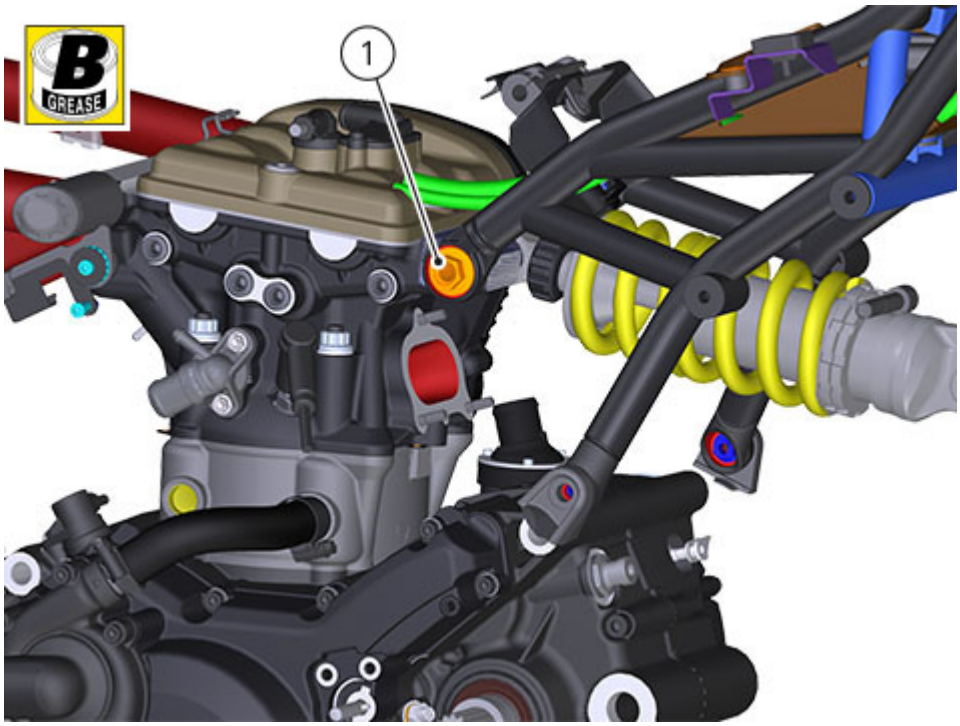

Refit the lateral footpeg holder plates (Refitting the footpeg holder plates).
Tighten the screws (1) to a torque of 150 Nm±5%.

Refitting is the reverse of removal (Removing the engine).

Refit the removed parts by performing the steps shown in the table and in the specific sections of the manual in reverse order.

Connect wiring connectors on the engine block.
Refit the side stand (Refitting the side stand).
Refit the front sprocket (Refitting the front sprocket).
Connect the clutch hose (Refitting the clutch slave cylinder).
Refit the gear shift (Refitting the gear shift).
Connect the starter motor/solenoid starter cable (Refitting the starter motor).
Refit the coolant tank (Refitting the water tank).
Refit the water radiator lower retainer on the engine block (Refitting the water radiator).
Refit the cooling system hoses and unions on the engine block (Refitting the cooling system hoses and unions).
Refill the cooling system (Changing the coolant).
Refit the oil cooler (Refitting the lubrication system).
Fill the lubrication system (Changing the engine oil and filter cartridge).
Refit the Canister filter pipes on the manifolds and restore the filter retainers on the horizontal head (Refitting the canister filter).
Refit the exhaust system (Refitting the exhaust system).
Connect the cap cables to the spark plugs (Replacing the spark plugs).
Refit the oil breather pipe, the blow-by pipe, the throttle body and the airbox (Refitting the airbox and throttle body).
Refit the secondary air system pipes and valve (Refitting the secondary air system).
Connect the throttle control cable (Refitting the throttle control).
Refit the fuel tank (Refitting the fuel tank).
Refit the seat (Refitting the seat).

Removing the engine

In order to remove engine you must first remove a series of other components from the motorcycle.
Most of these removal procedures are described in the relative sections of this manual.
Following are the logical sequence in which the parts are to be removed from the motorcycle and a reference to the section where the removal procedure is described.
This section describes only the operations to be carried out after having removed all the parts listed in the chart.

Remove the seat (Removing the seat).
Remove the fuel tank (Removing the fuel tank).
Remove the throttle control cable (Removing the throttle control).
Remove the airbox, the throttle body, the blow by and the oil breather pipe (Removing the airbox and throttle body).
Remove the secondary air system pipes and valve (Removing the secondary air system).
Remove the supply system and the injectors from the intake manifolds (Removing the airbox and throttle body).
Disconnect the caps from the spark plugs (Replacing the spark plugs).
Remove the exhaust system (Removing the exhaust system).
Remove canister pipes from manifolds (Removing the Canister filter).
Remove the canister retainers from the horizontal head (Removing the Canister filter).
Drain the lubrication system (Changing the engine oil and filter cartridge).
Remove the oil cooler hoses from the engine block (Removing the lubrication system).
Remove the oil cooler with fixing plate (Removing the lubrication system).
Drain the coolant (Changing the coolant).
Remove the cooling system hoses and unions from the engine block (Removing cooling system hoses and unions).
Remove the coolant tank (Removing the water tank).
Remove the water radiator lower retainer from the engine (Removing the water radiator).
Disconnect the starter motor/solenoid starter cable (Removing outer components).
Remove the gear shift (Removing the gear shift).
Disconnect the clutch hose (Removing the clutch slave cylinder).
Remove the front sprocket (Removing the front sprocket).
Remove the side stand (Removing the side stand).
Disconnect wiring connectors on the engine block.

Install the engine support no. **88713.3396** beneath the engine to support it during removal from the frame.

Remove the footpeg holder plates (Removing the footpeg holder plates).
Support subframe rear side.

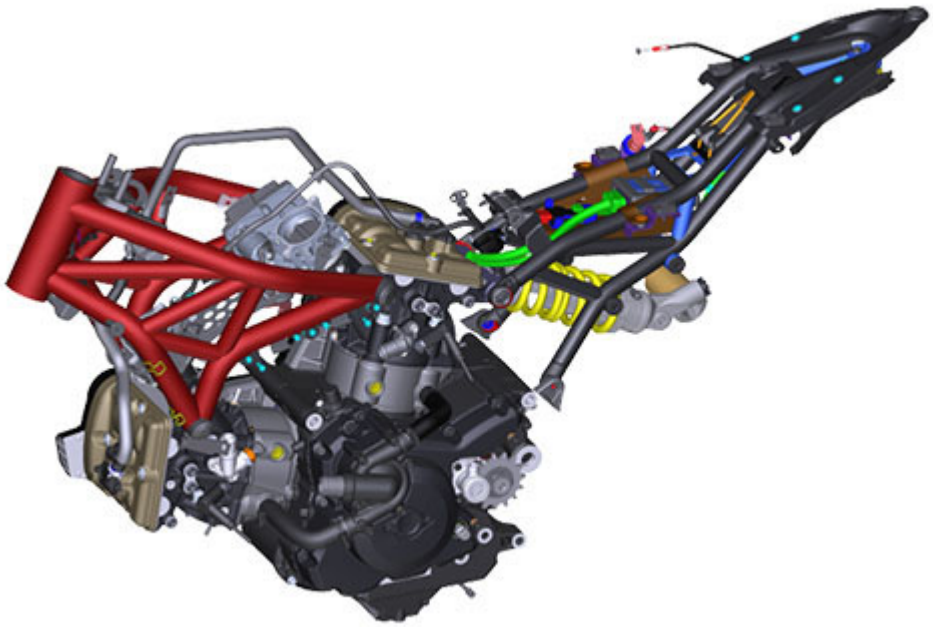



Remove the complete swinging arm (Removing the swinging arm).

Working on both sides, loosen screws (1) securing subframe to head.

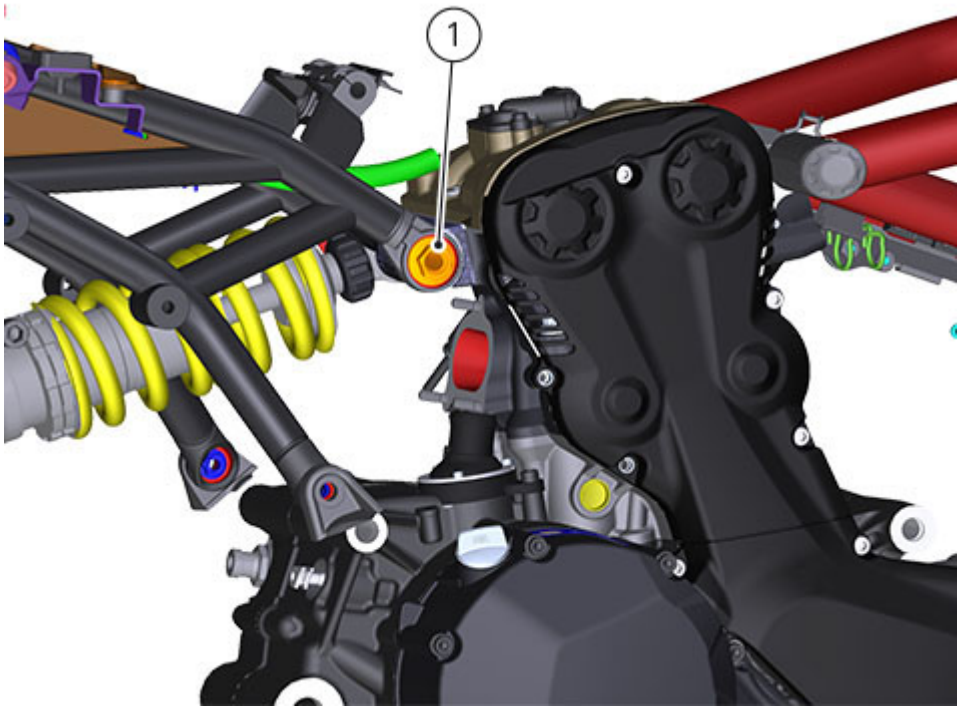

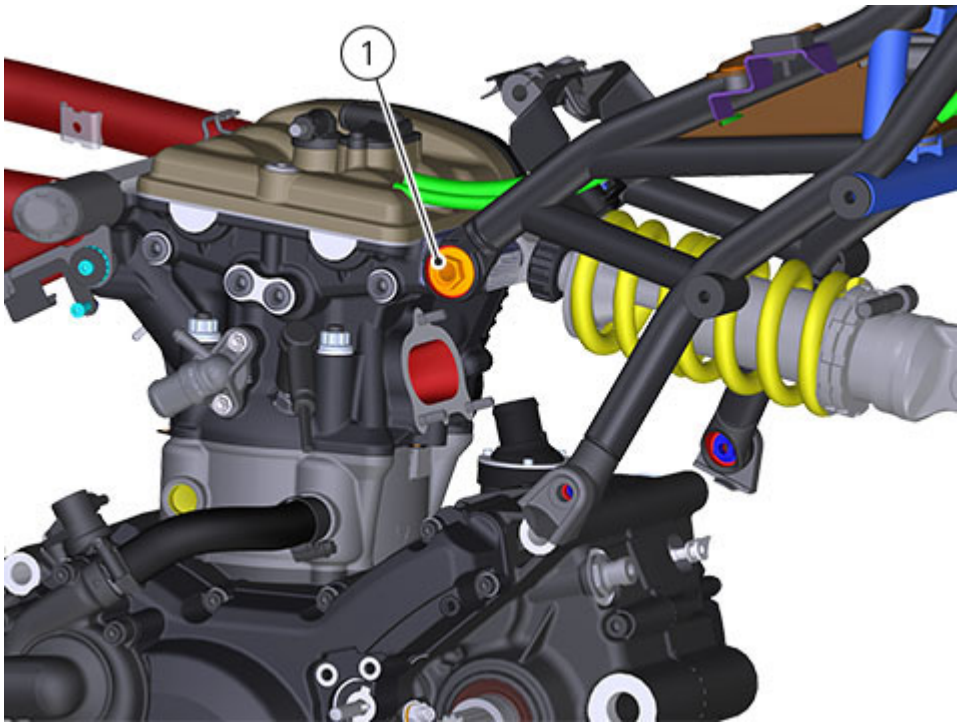

Loosen rear shock absorber retaining screw (2) and slide out rear subframe.

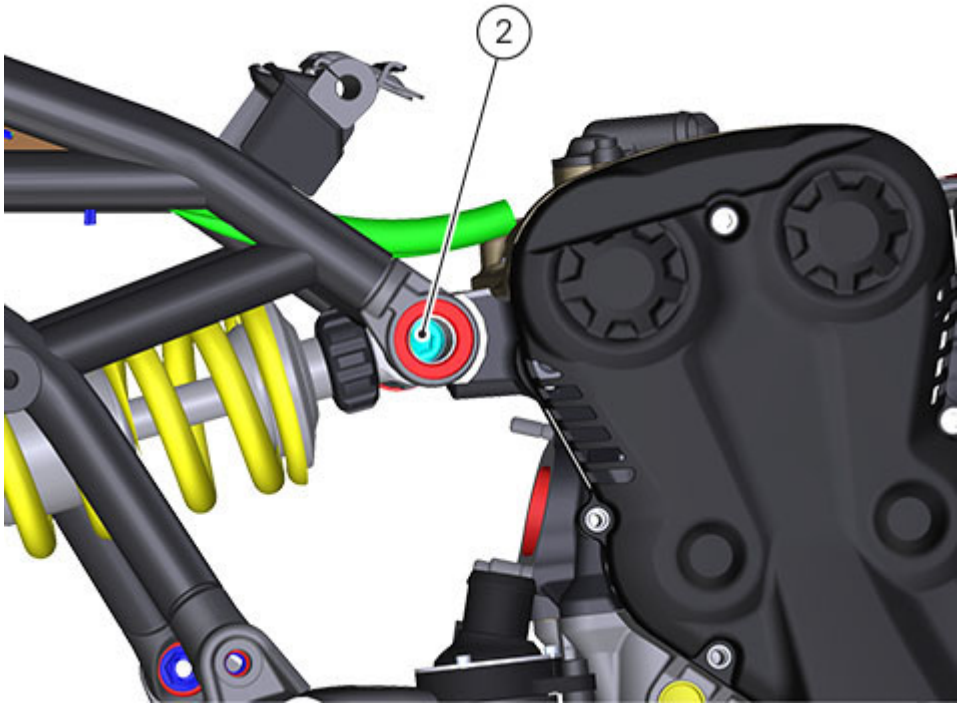

Working on both sides, remove front (3A) and rear (3P) plugs.



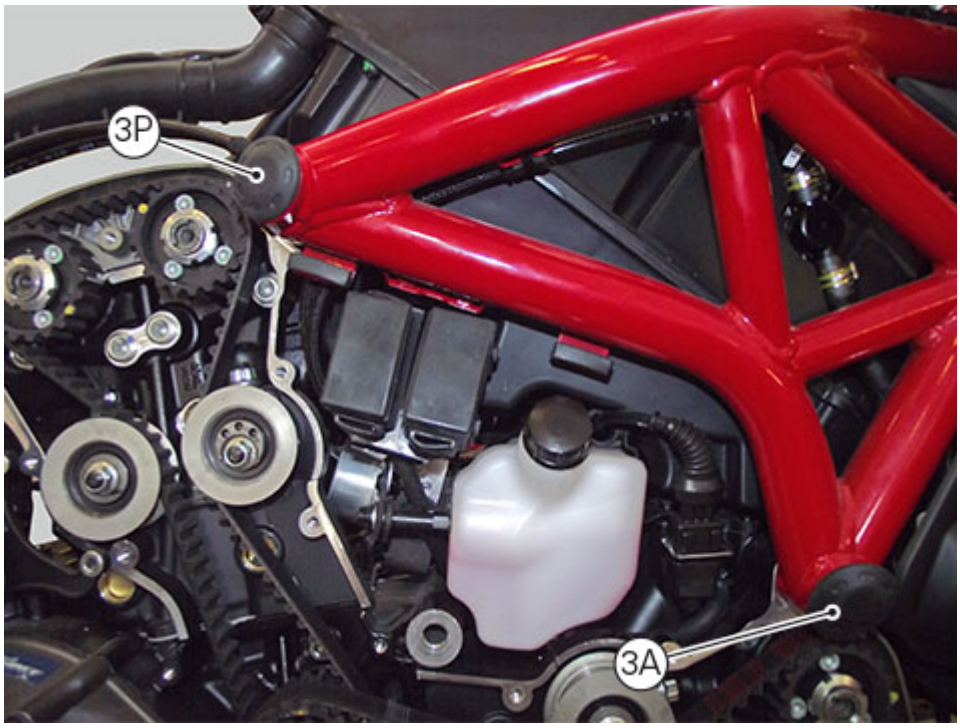

Working on both sides, loosen the four threaded pins (4).

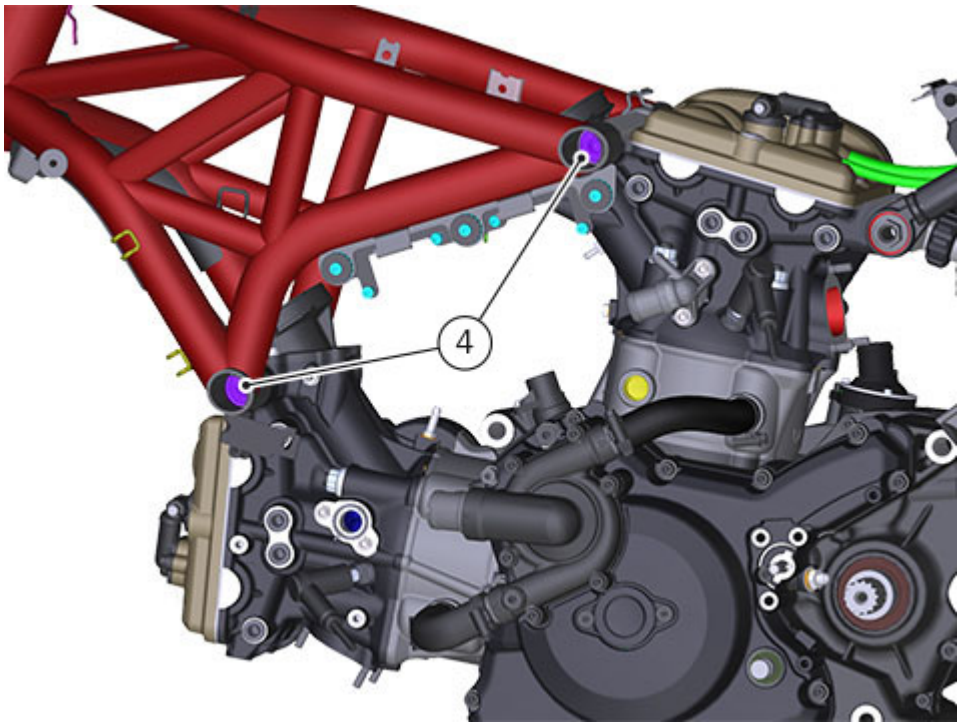
4

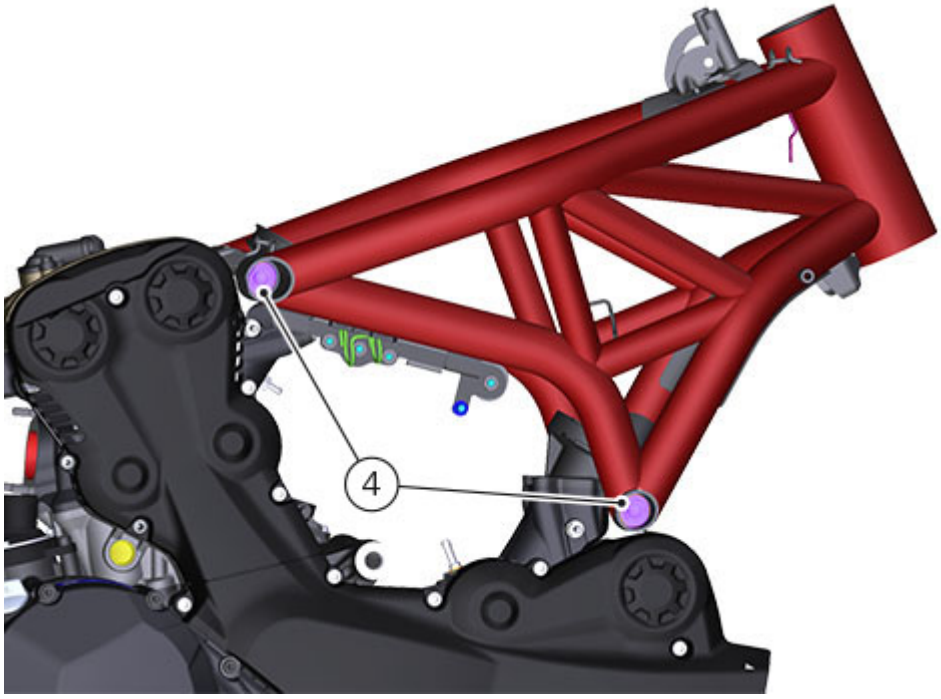
4

Refitting the oil pump

If previously removed, apply the recommended threadlocker on the bush (8) and screw it in the crankcase half, observing the height.
Position the reference bushes (6) and the O-rings (4) and (5) according to the casing lubrication channels.

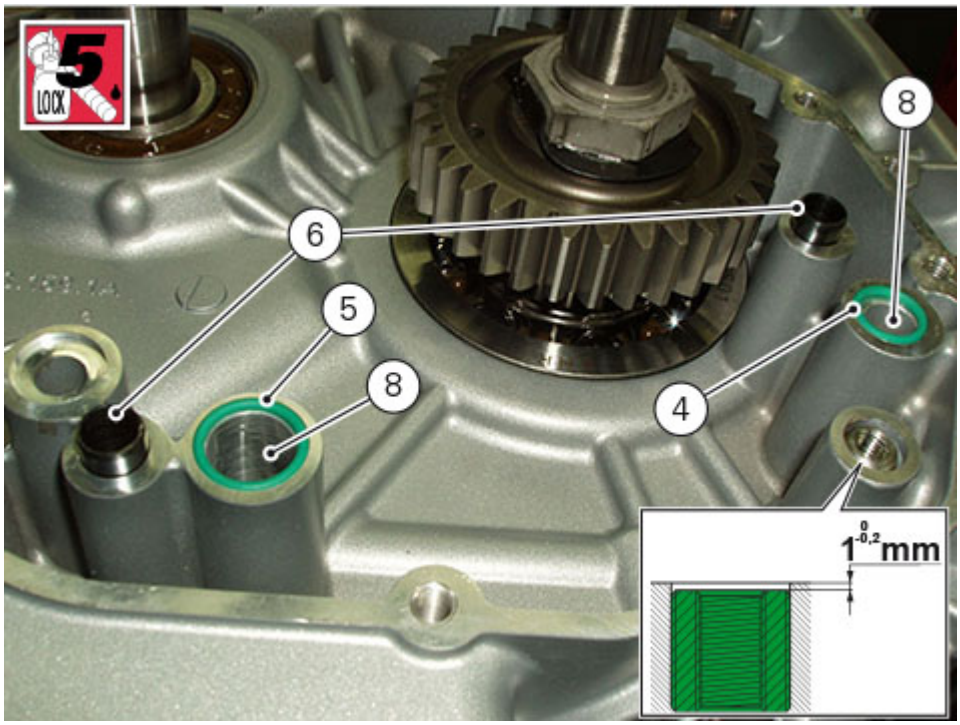

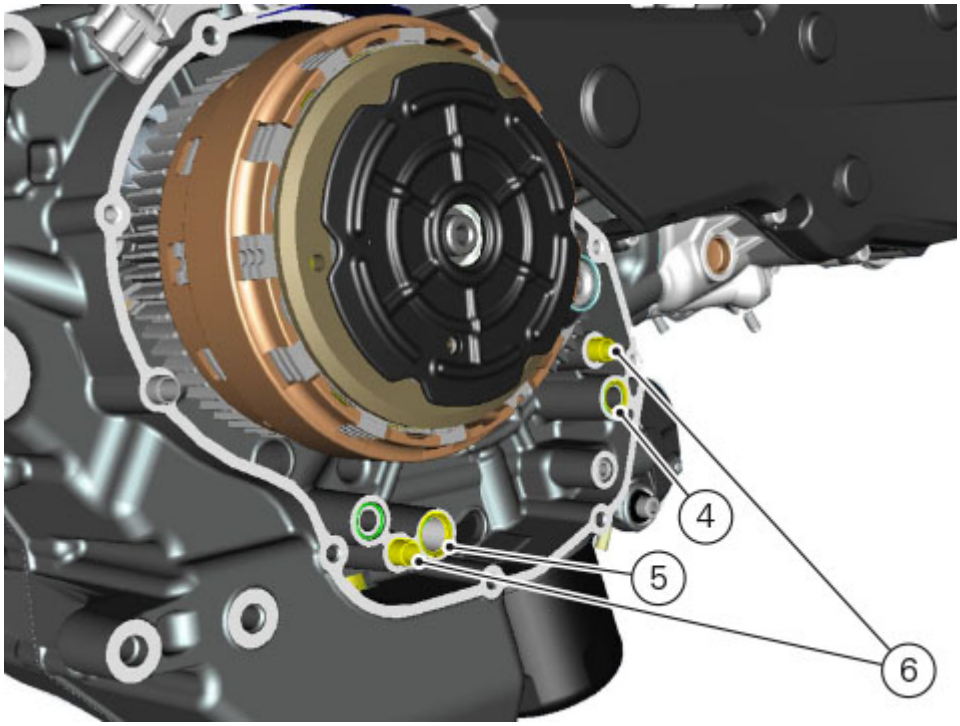

Position the complete oil pump (3) on the casing, fit the relevant washers (A) and (B) and tighten screws (1) to 26 Nm (Min. 23 Nm - Max. 29 Nm) and screw (2) to a torque of 10 Nm (Min. 9 Nm - Max. 11 Nm).

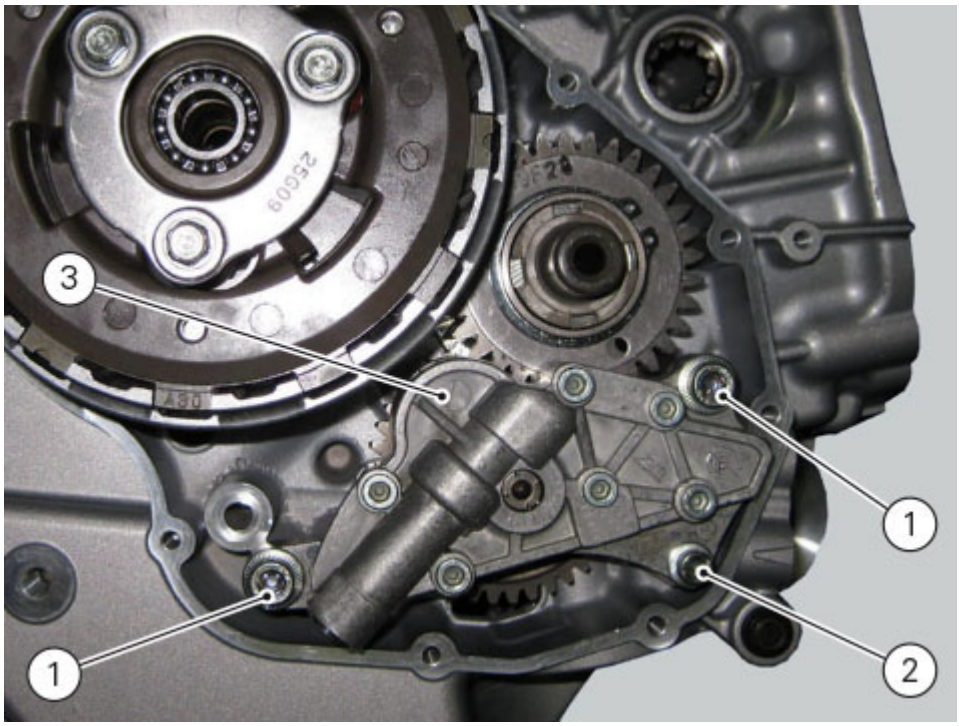

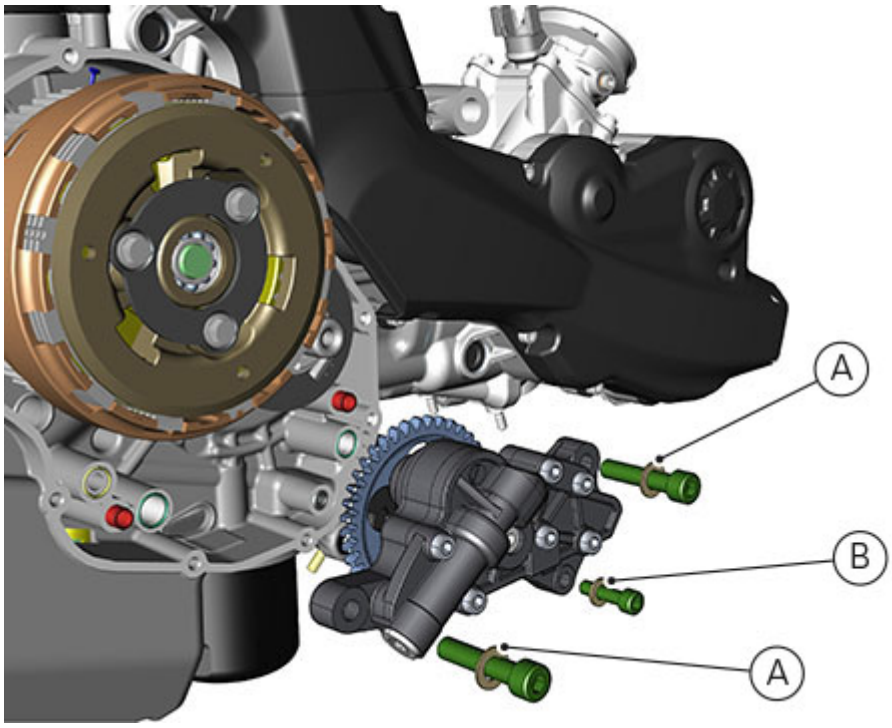

Check the gear clearance with the front sprocket by fixing a dial gauge (A), equipped with the appropriate stylus, to the crankcase half.
Position the dial gauge stylus on one tooth of oil pump gear and set the gauge to zero in this position.
Move the gear slightly to measure the backlash; take four readings in diametrically opposed positions of the gear.
The clearance should be 0.10 mm.

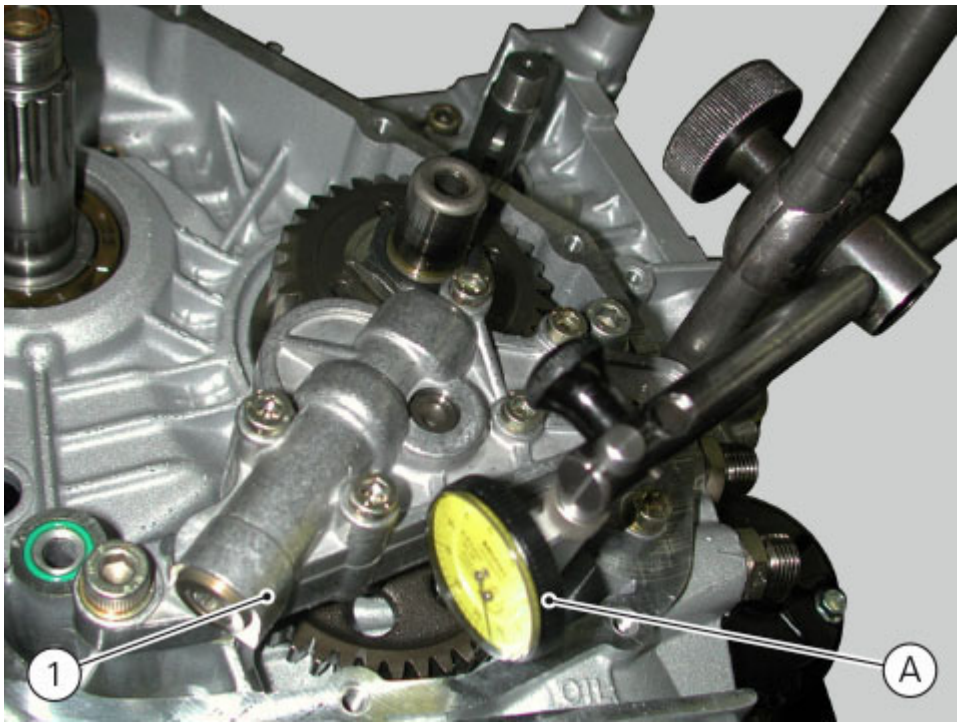

Refit the clutch cover (Refitting the clutch cover).
Fill the system (Changing the engine oil and filter cartridge).

Reassembling the oil pump

Check that the spring (8) and key (6) are present on the pump.
Fit the pump drive gear (7) on to the oil pump and secure it by installing the circlip (6) in its groove.

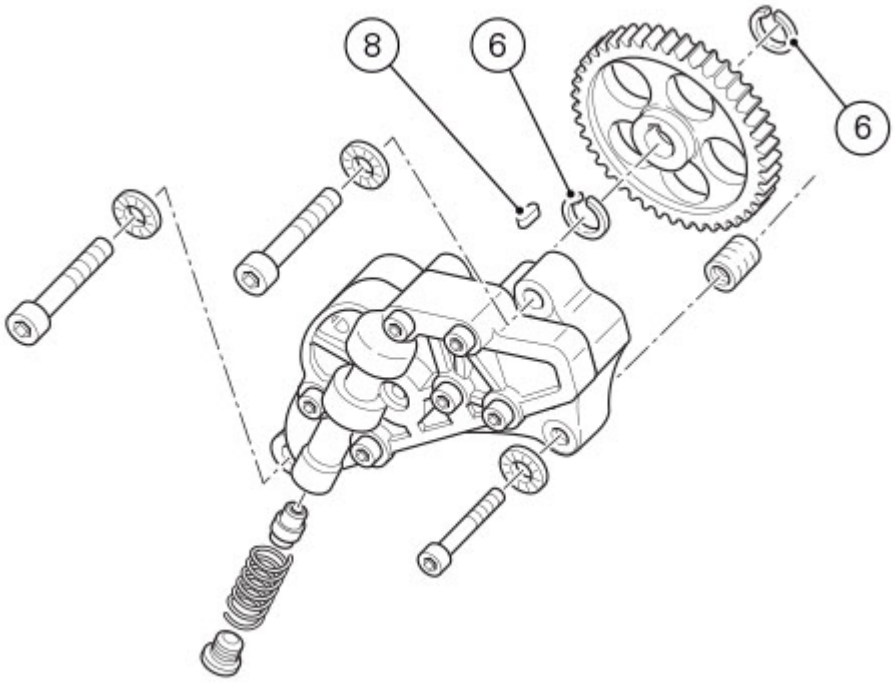

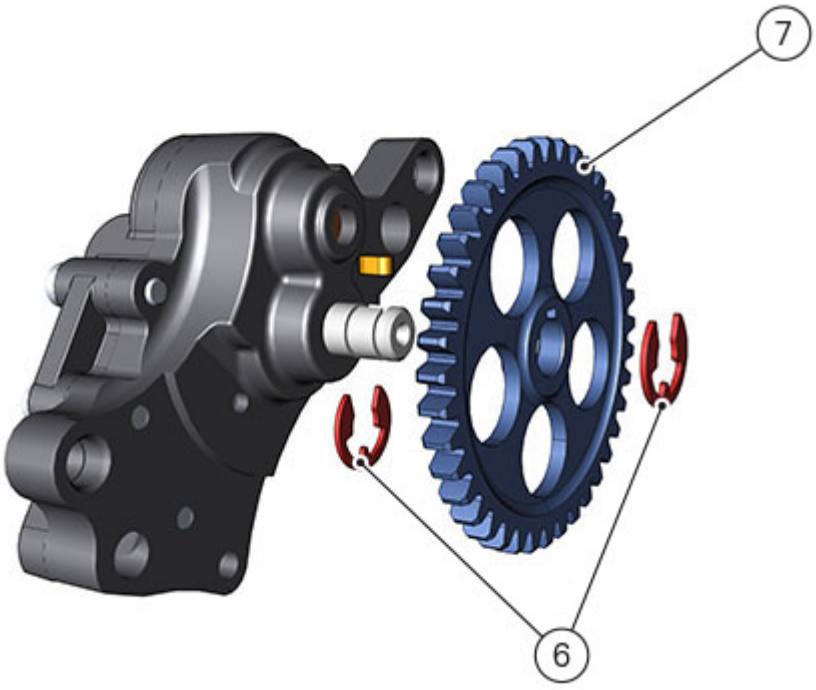

Insert by-pass valve (5), spring (4) in the pump and tighten plug (3) to a torque of 17 Nm (Min. 15 Nm - Max. 19 Nm) by applying medium-strength threadlocker.

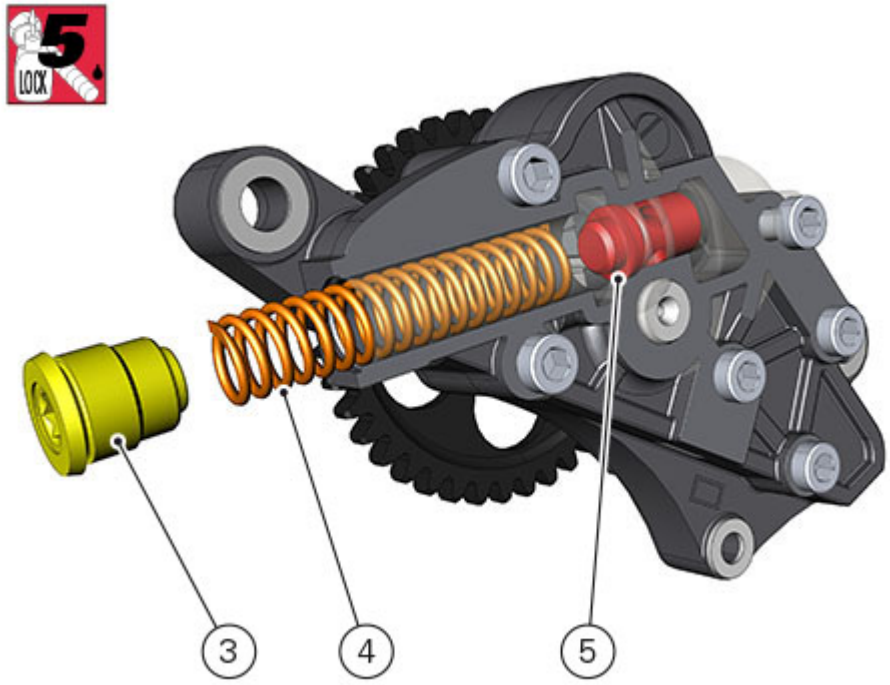
5.
LOCK
3
4
5

Disassembling the oil pump gear

Hold the oil pump (1) in a vice taking care not to damage the drive gear (2).

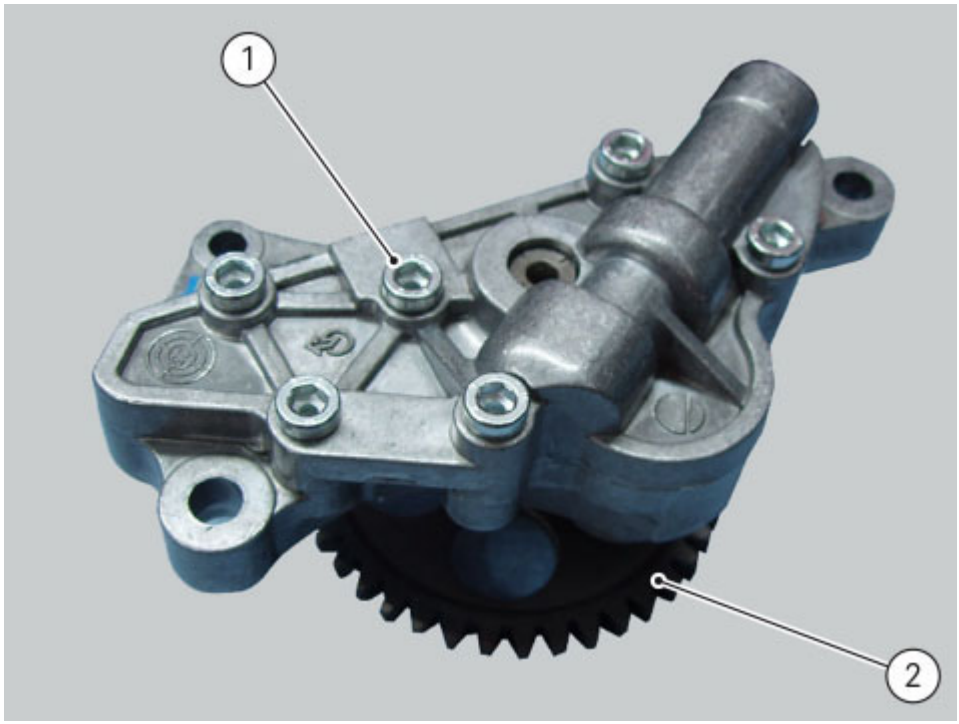

Warning
Make sure that vice jaws are faced with soft material.

Remove the plug (3) and extract the spring (4) and by-pass valve (5).

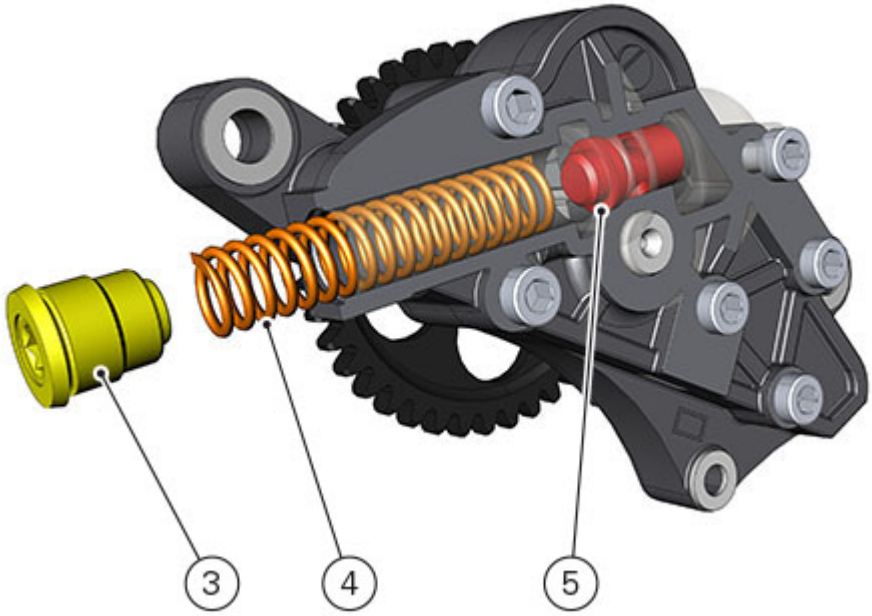

Check the condition of the above components.
Remove the circlip (6) and withdraw the pump drive gear (7).

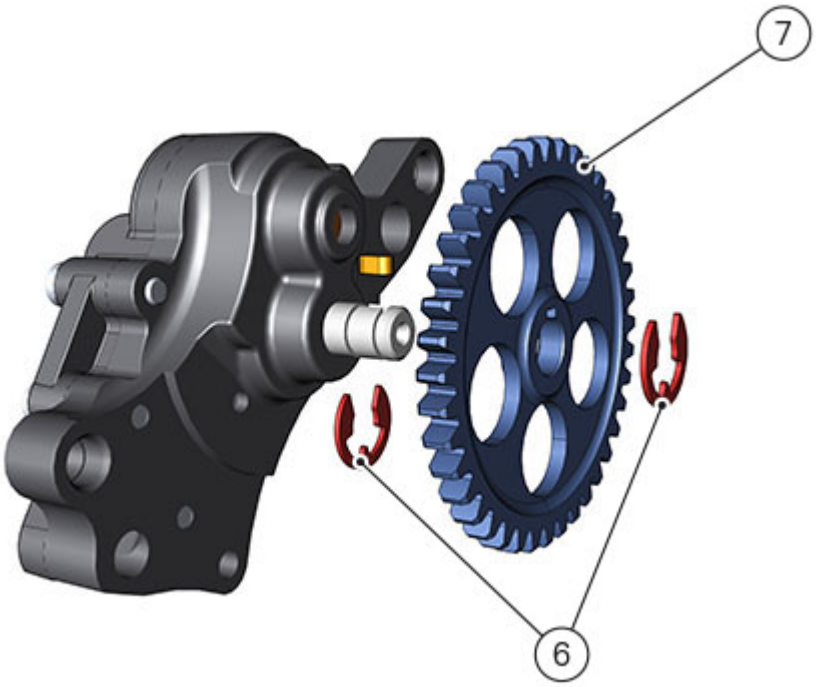
7
6

Removing the oil pump

Drain the system (Changing the engine oil and filter cartridge).
Remove the clutch cover (Removing the clutch cover).

Loosen and remove screws (1) and (2) that retain the complete pump and collect the relevant washers (A) and (B).

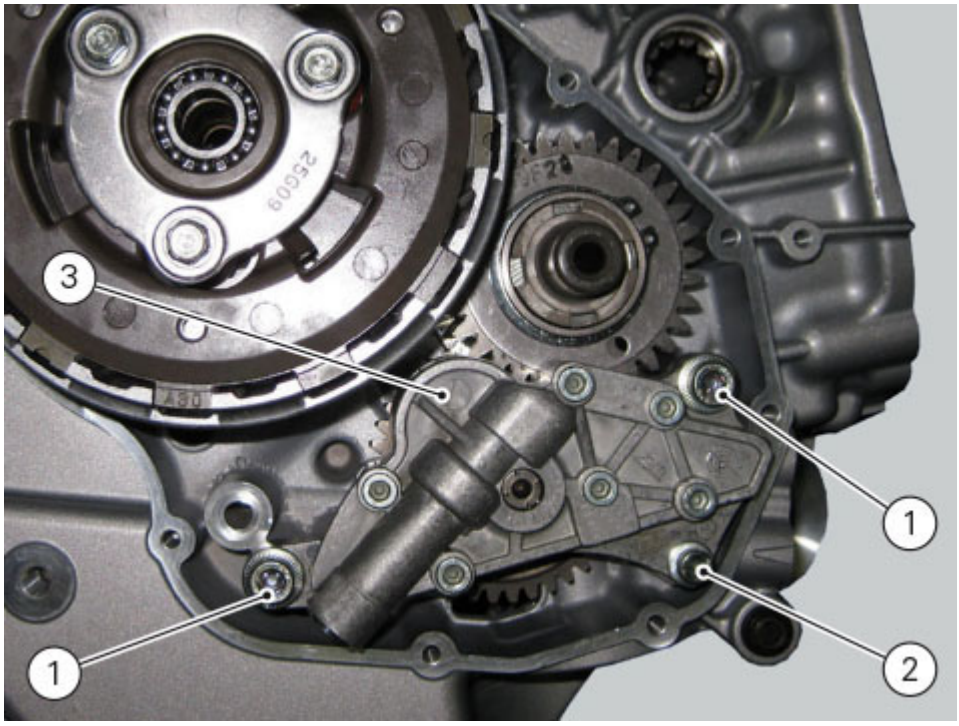

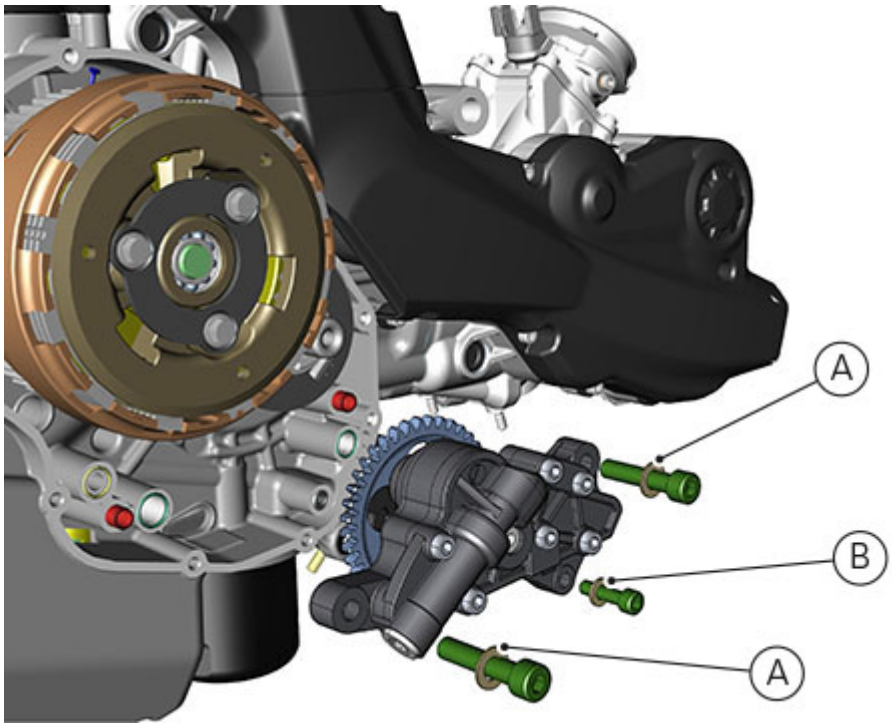

Remove the oil pump assembly and extract the two O-rings (4) and (5) from the crankcase half together with the two centring bushes (6).

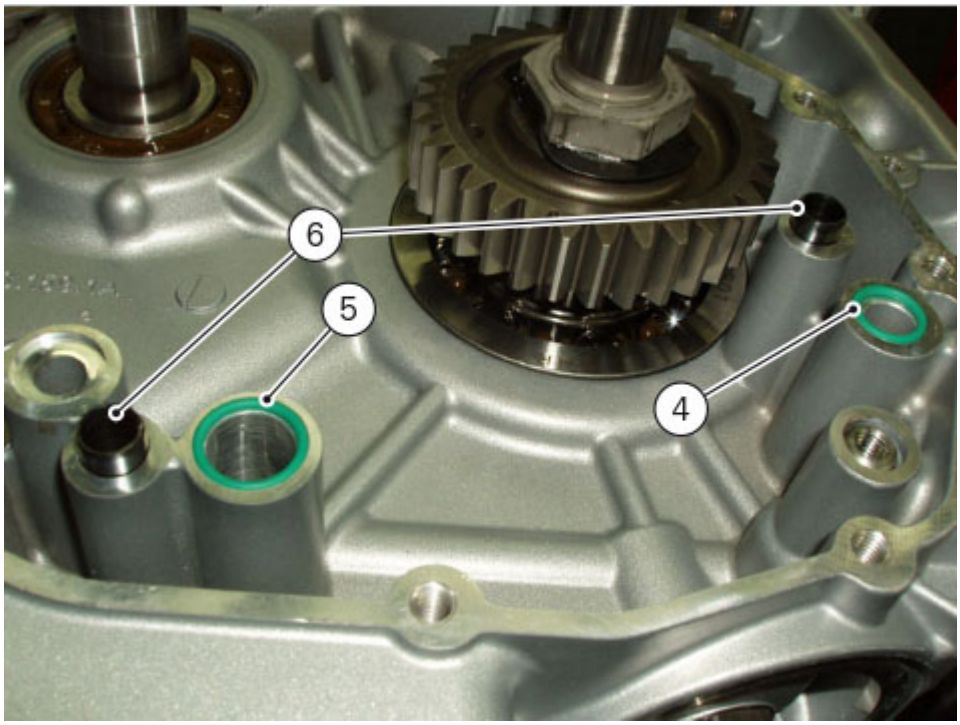
6
5
4

Refitting the lubrication system

Before fitting hoses (15) check the presence of O-rings (A) on both ends and lubricate them with engine oil.

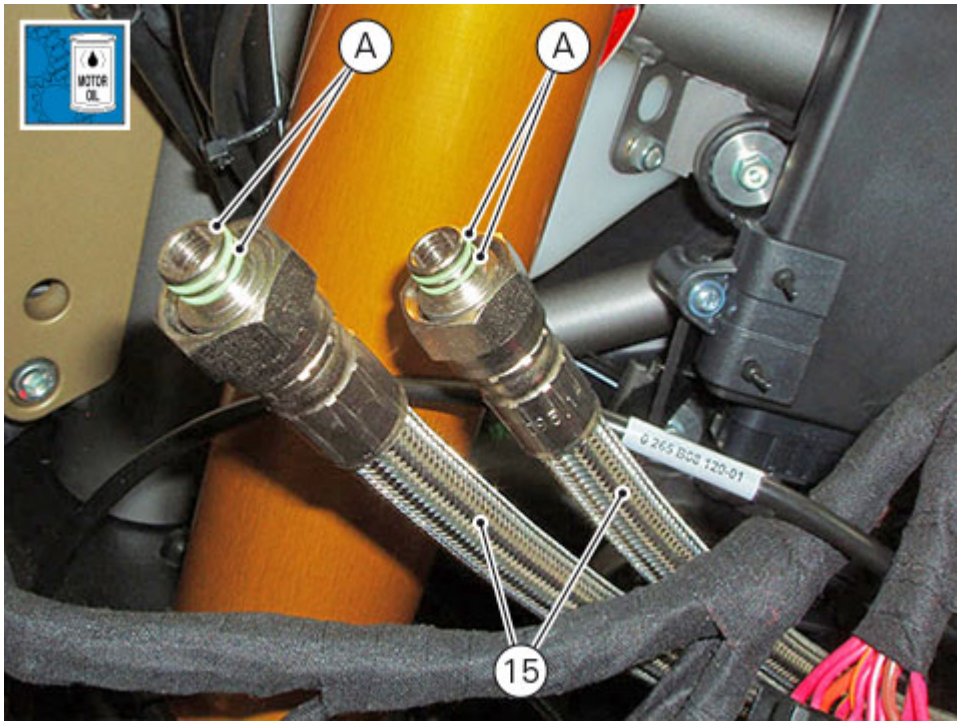

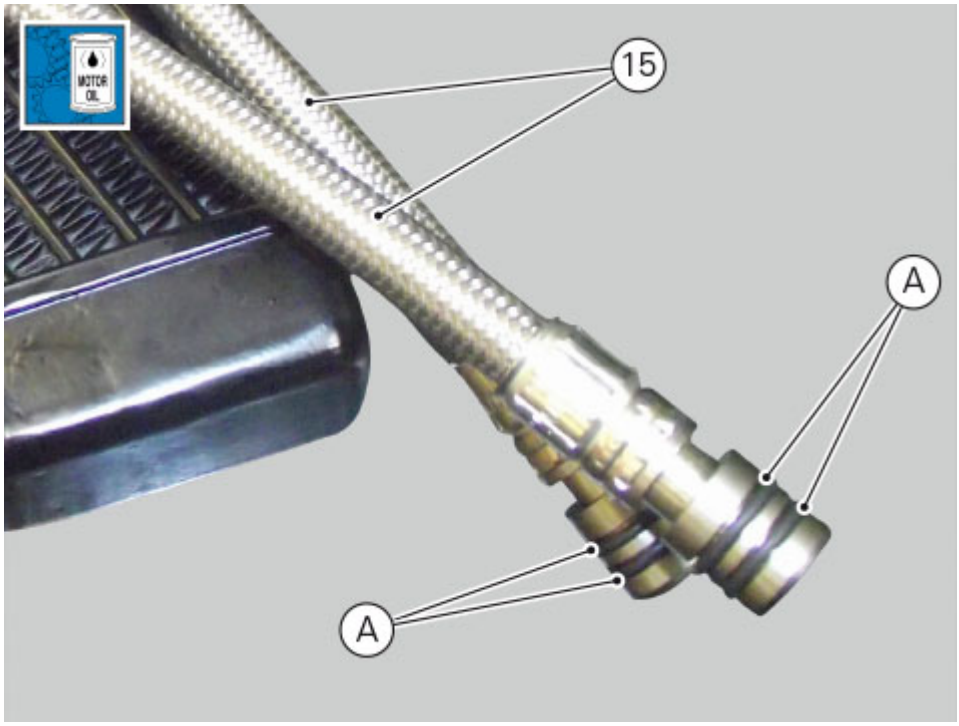

If nipples (16) have been removed from cooler, fit a seal (17) on each nipple (16) and apply specified threadlocker on the cooler side threads.

Note

Washers must be fitted on the side featuring nipples with smaller diameter and oriented with the sharp edge facing the cooler.

Start nipples (16) on oil cooler (22) and tighten them to 23 Nm ± 10%.
Lubricate the nipple threads (16) with the specified product.
Attach the hose ends to the nipples (16) and finger-tighten the hose nuts (B) on the nipples.
Tighten nuts (B) to a torque of 18 Nm ± 5 %.

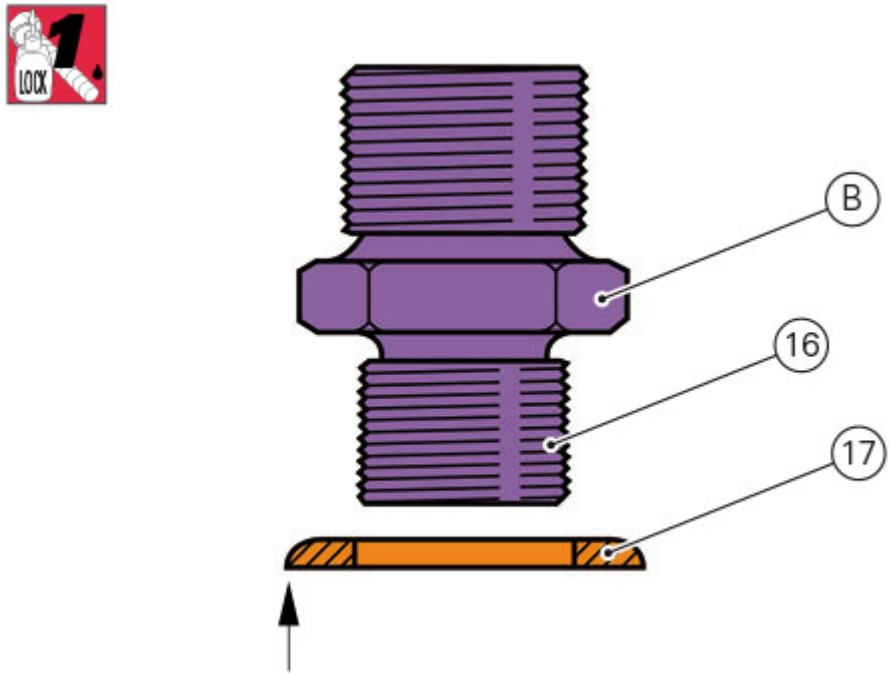
LOCK
1.
B
16
17

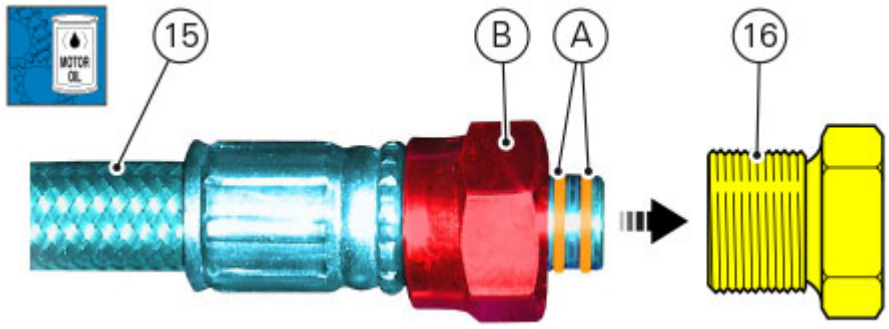
MOTOR OIL
15
B
A
16

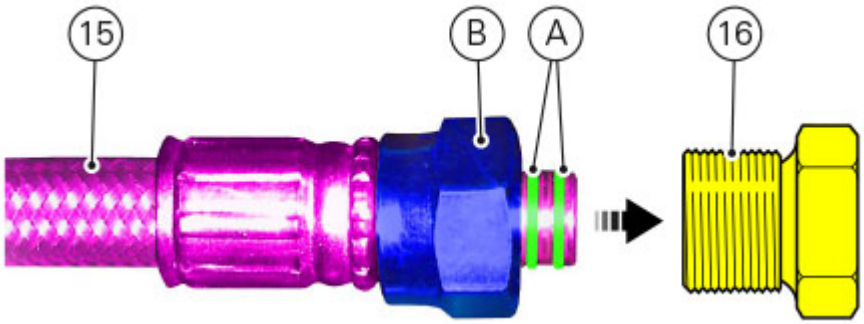
15
B
A
16

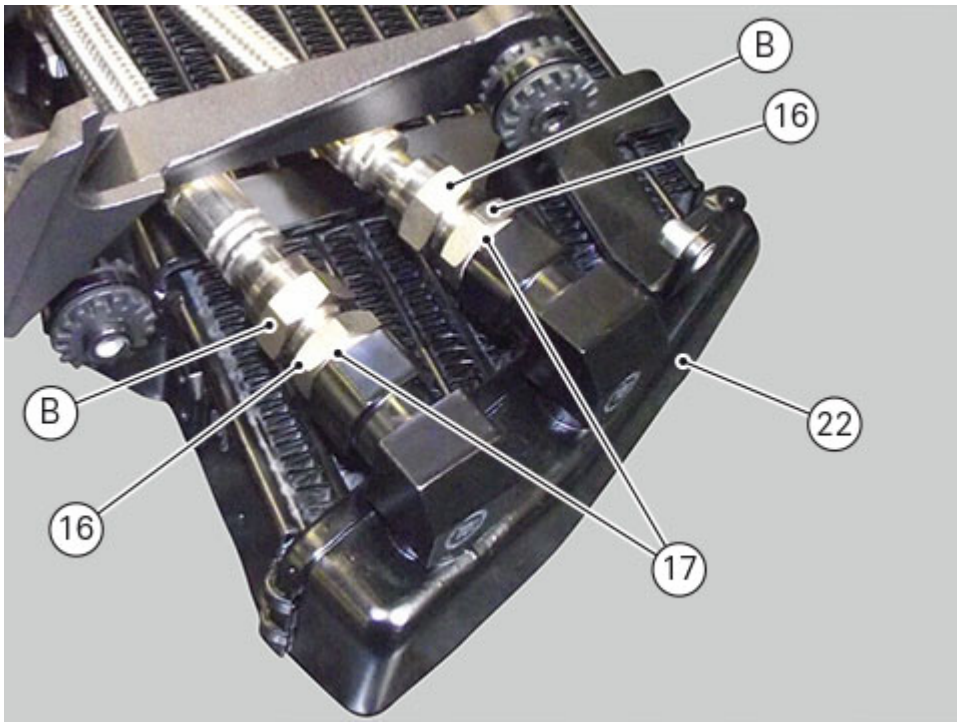

If pressure switch (21) has been previously removed, lubricate its thread with engine oil and start it on the cooler.
Tighten pressure switch (21) to a torque of 24 Nm ± 10 %.

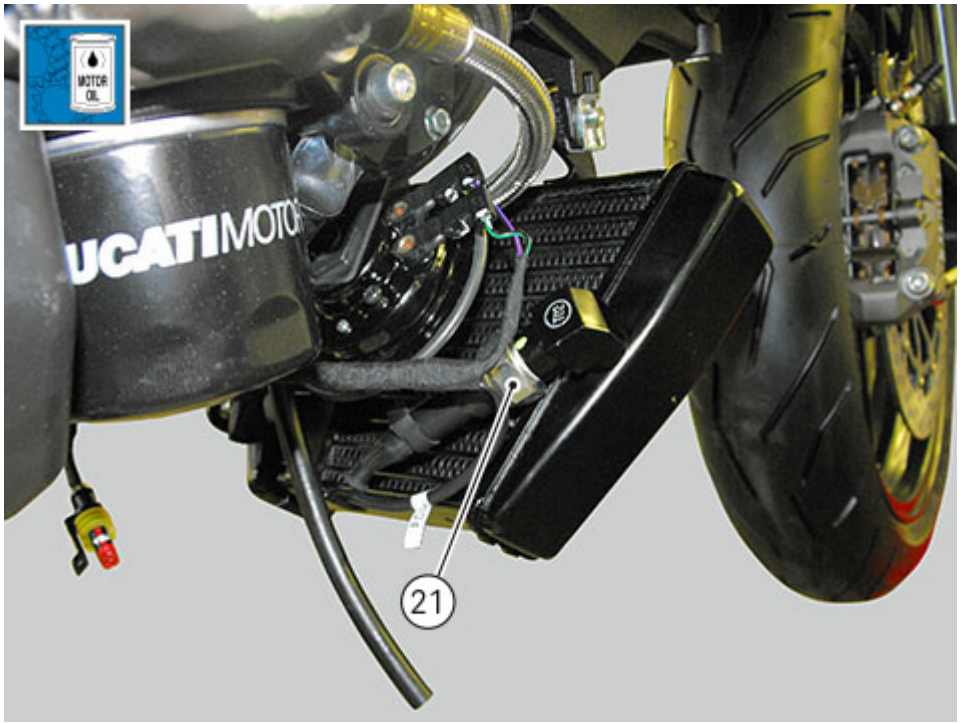

Make sure that on both sides of the cooler there are vibration damping pads (18).
Fit the oil cooler by inserting it in the support pins (C).
Fit spacer (19) and start screw (14).

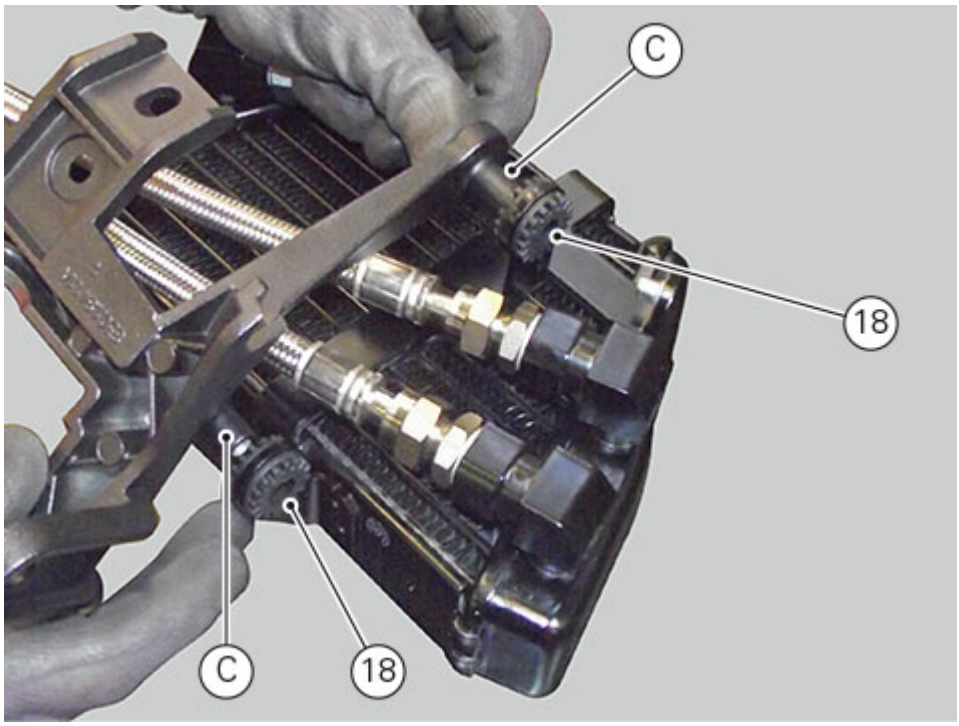

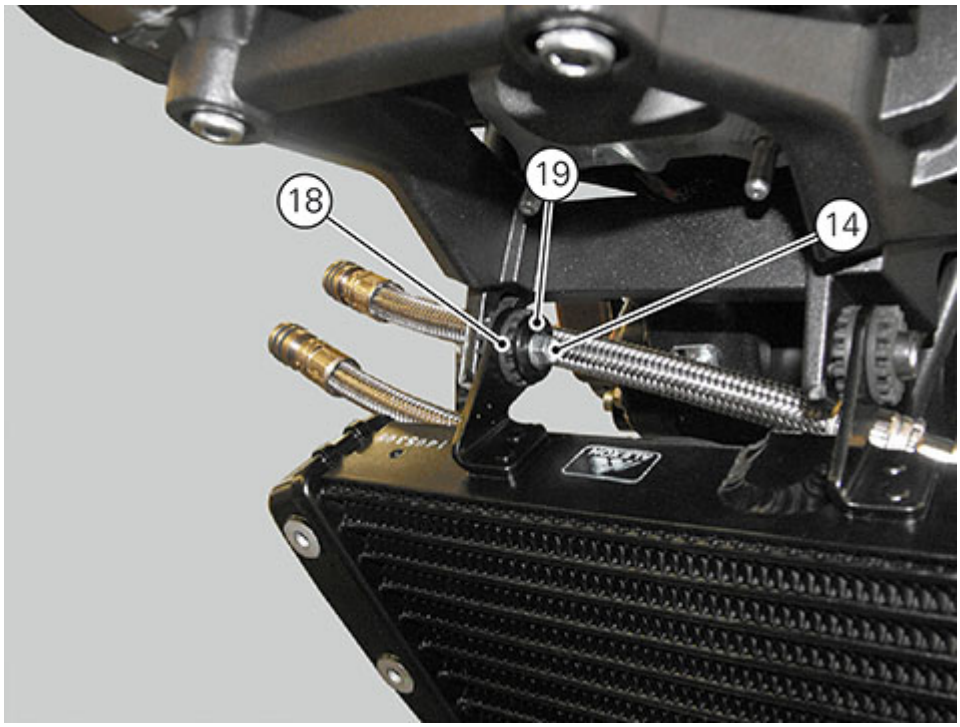

Position hoses (15) in the crankcase half.
Position plate (12).
Apply the specified threadlocker and tighten screw (11) to a torque of 10 Nm ± 10%.

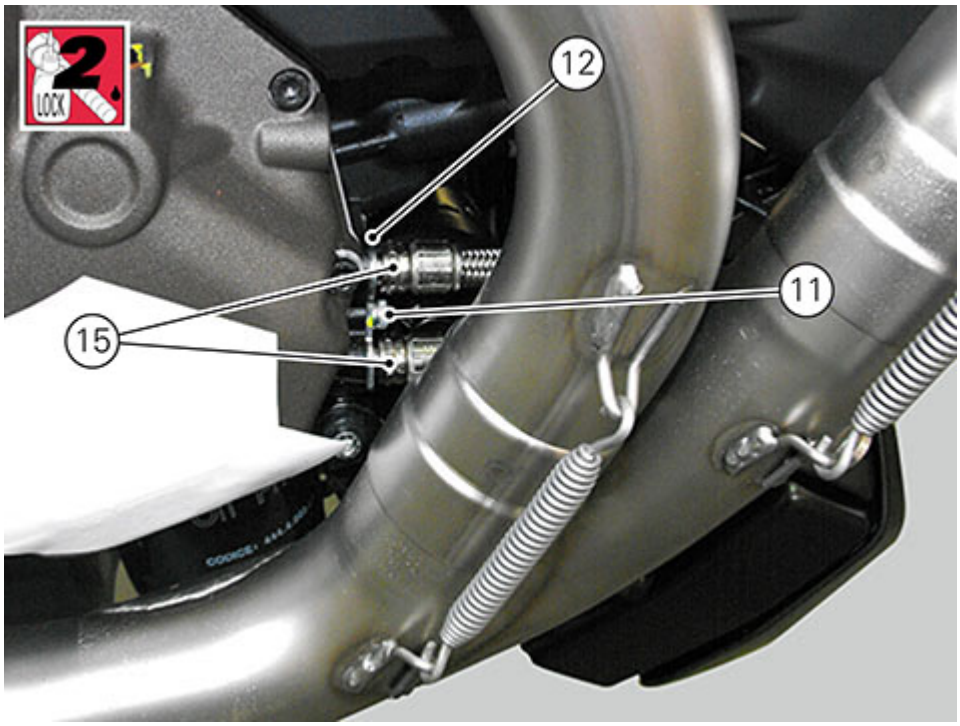

Tighten the screw (14) to a torque of 6 Nm ± 10%.

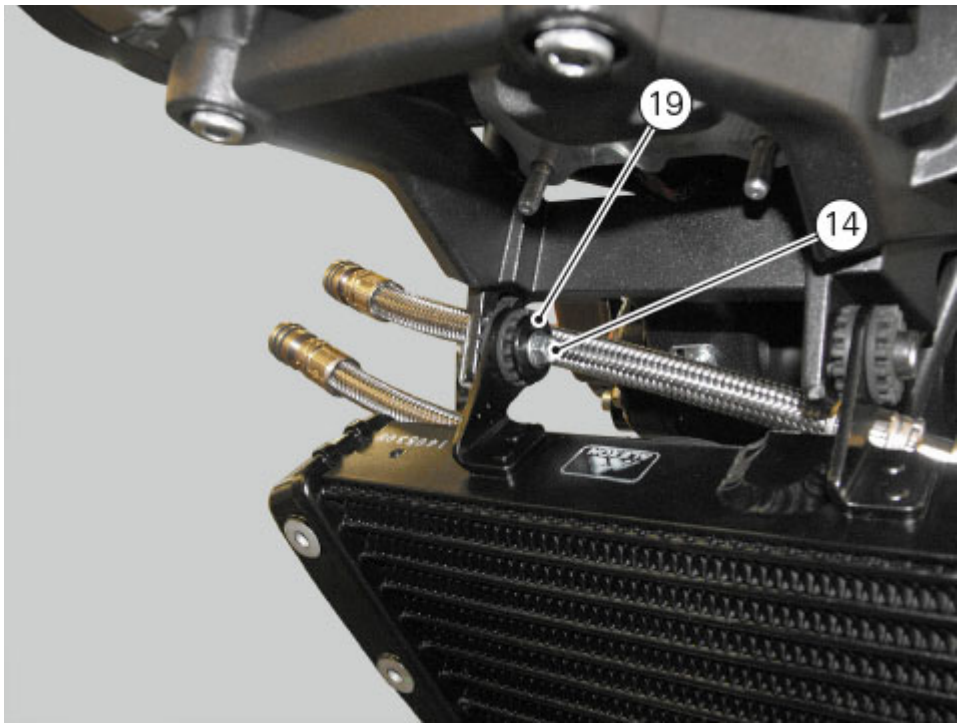

Connect oil pressure switch (8) to the main wiring and fix them with tie (9).

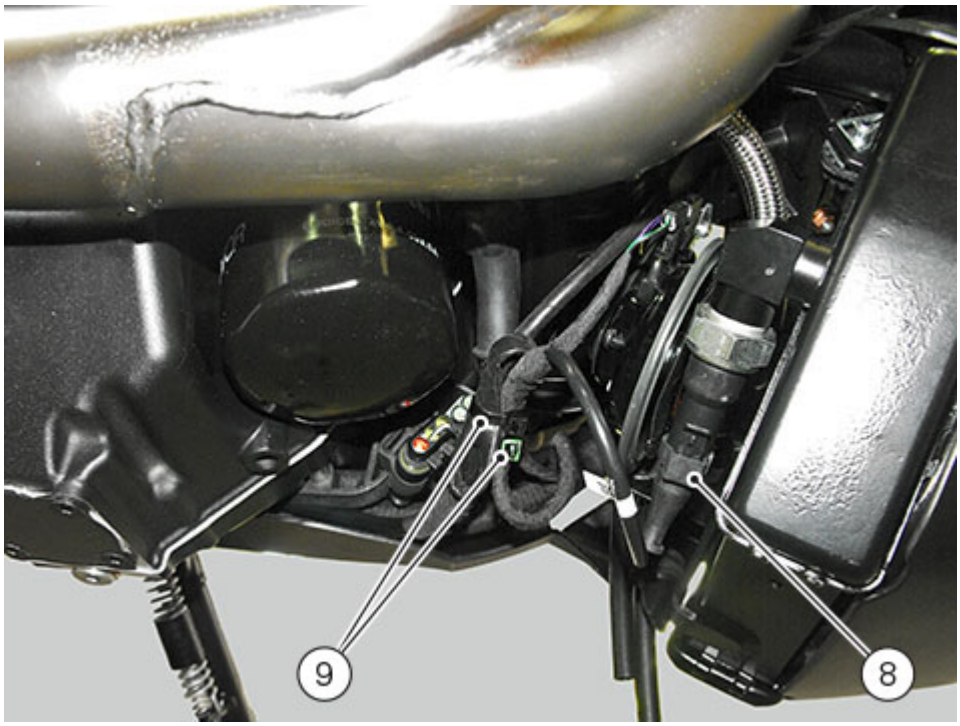

Position cover (7) and tighten the four front screws (6) to a torque of 4Nm ± 10%.

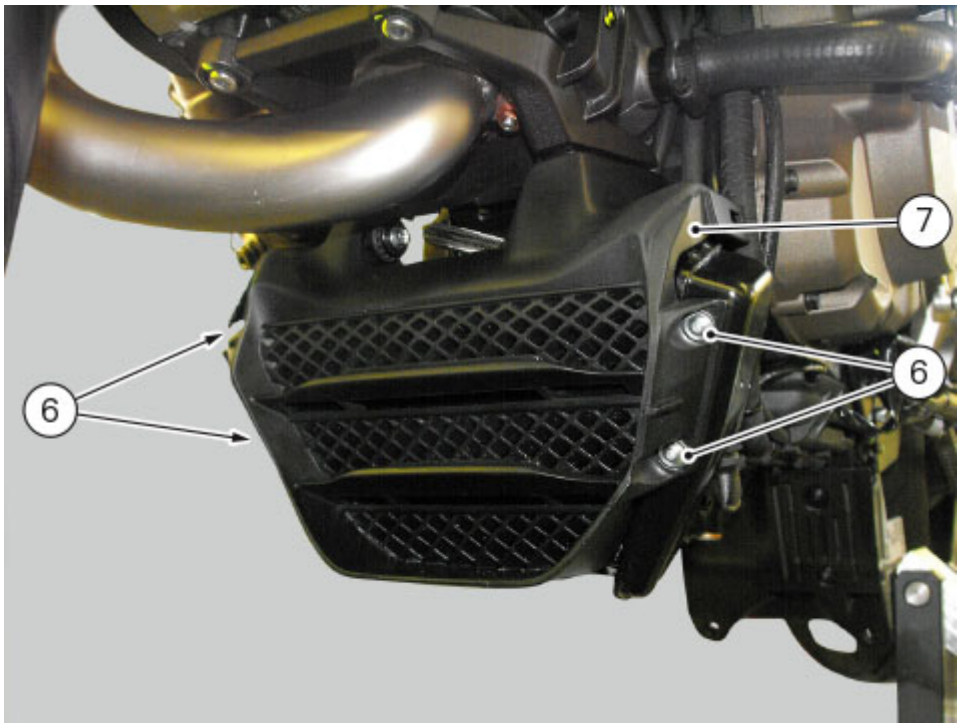

Pay attention to the cover (5) installation on cover (7).

Attention

Position the covers by respecting the alignment with the tabs.

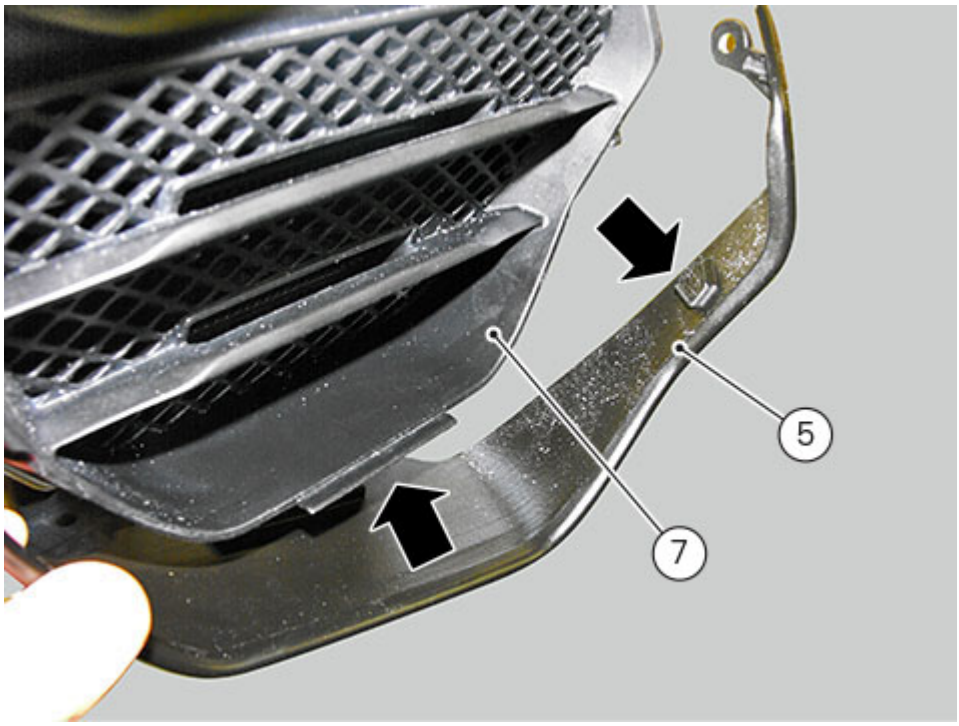

Work on both sides to position cover (5) and tighten screws (4) to a torque of 0.8 Nm ± 10%.

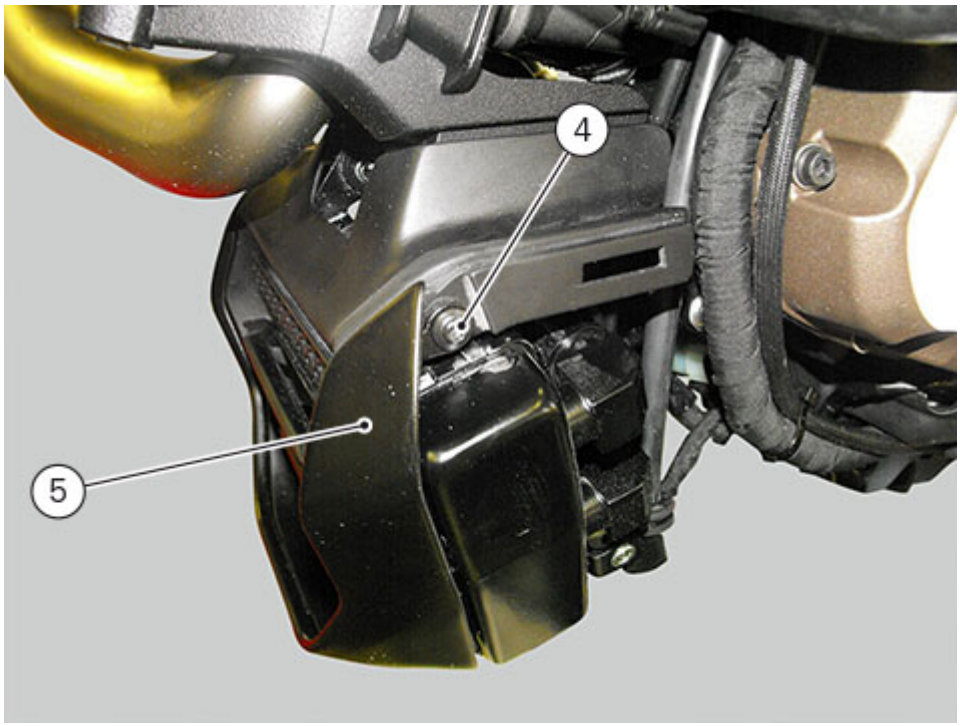

Pay attention while fitting cover (3) on cover (5) and positioning the hoses and wiring (Routing of wiring on frame).

Attention

Position the covers by respecting the alignment with the tabs.


5
3

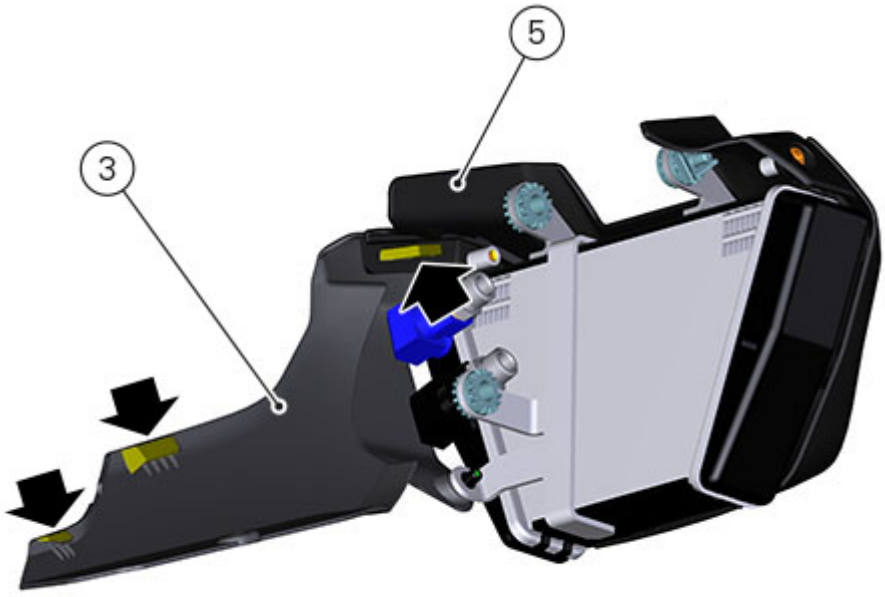
5
3

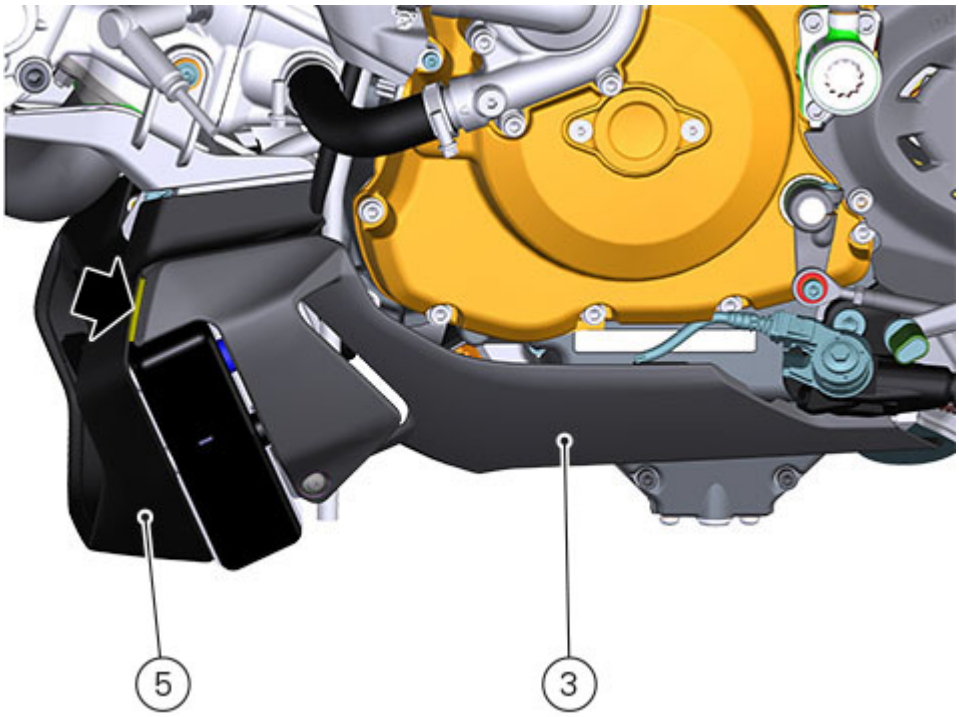

Route wiring (2) in the lower cover (3) and tighten the two screws (1) on the left side to a torque of 4 Nm ± 10%. After fitting cover (3) check that the side stand wiring (2) is positioned correctly.

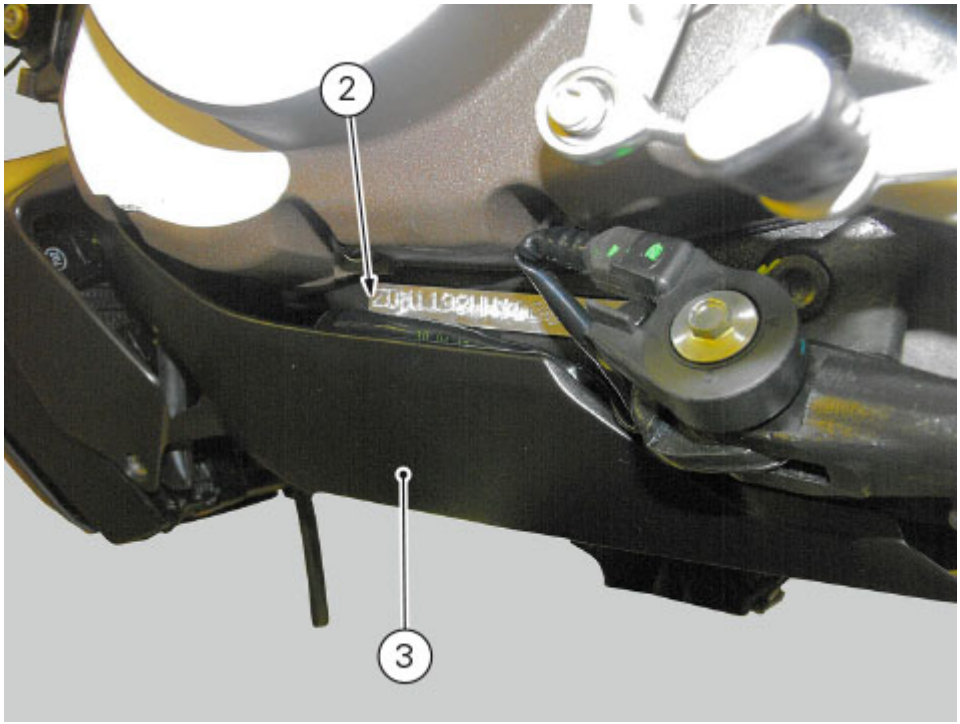

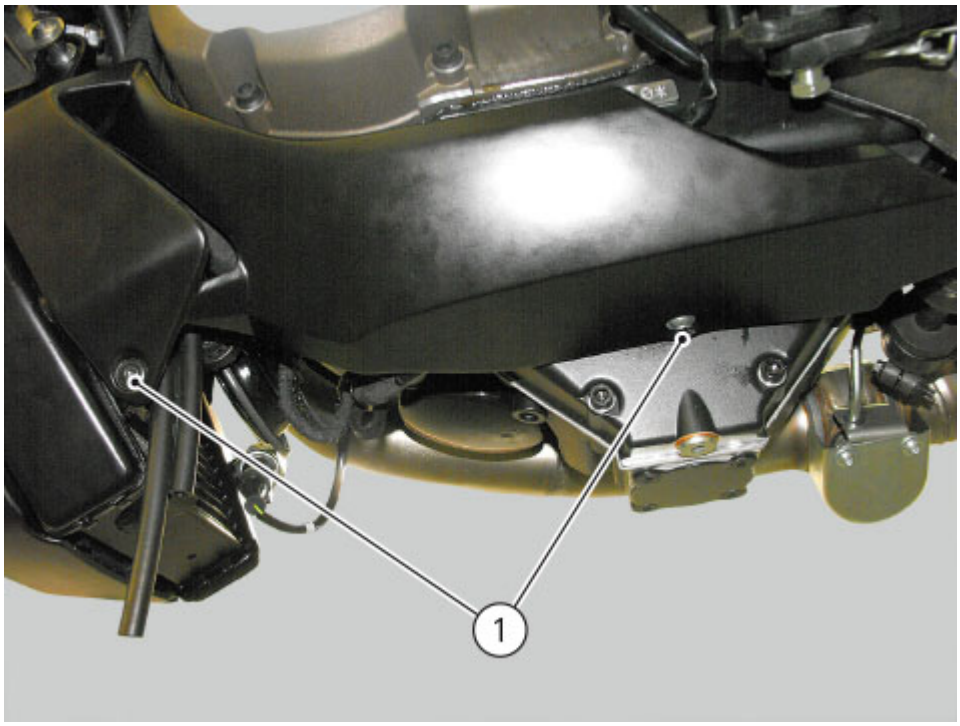

Fill the system (Changing the engine oil and filter cartridge).

Inspecting the oil cooler

Visually inspect the cooler.
Replace it at any sign of damage or leaks (Refitting the lubrication system).

Removing the lubrication system

Drain the system (Changing the engine oil and filter cartridge).

Remove the two LH lower screws (1).

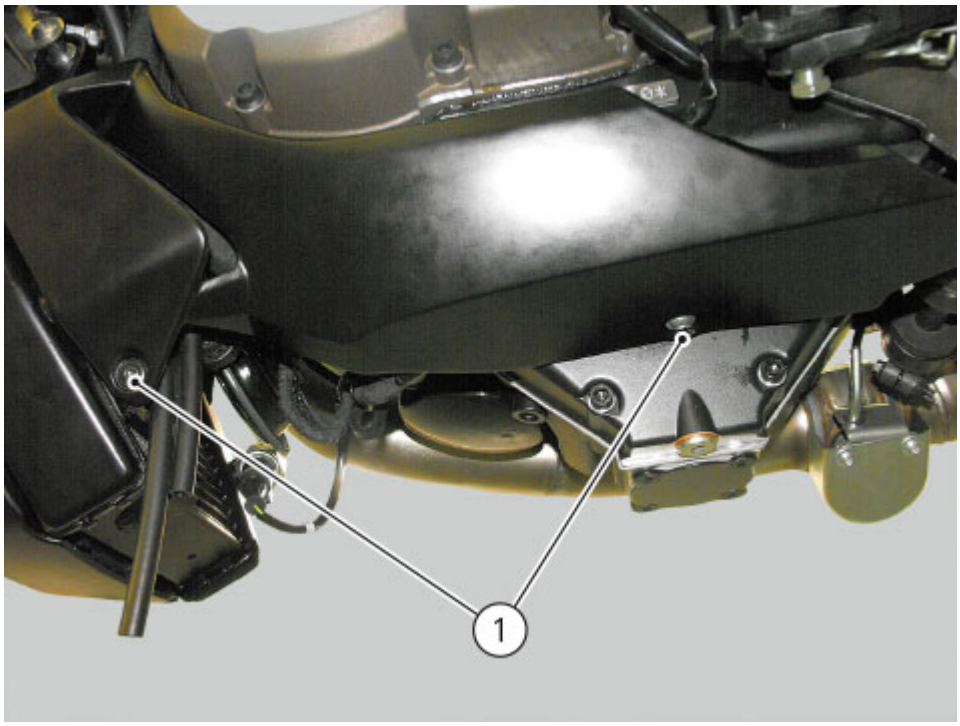

Slide wiring (2) out and remove the lower cover (3).

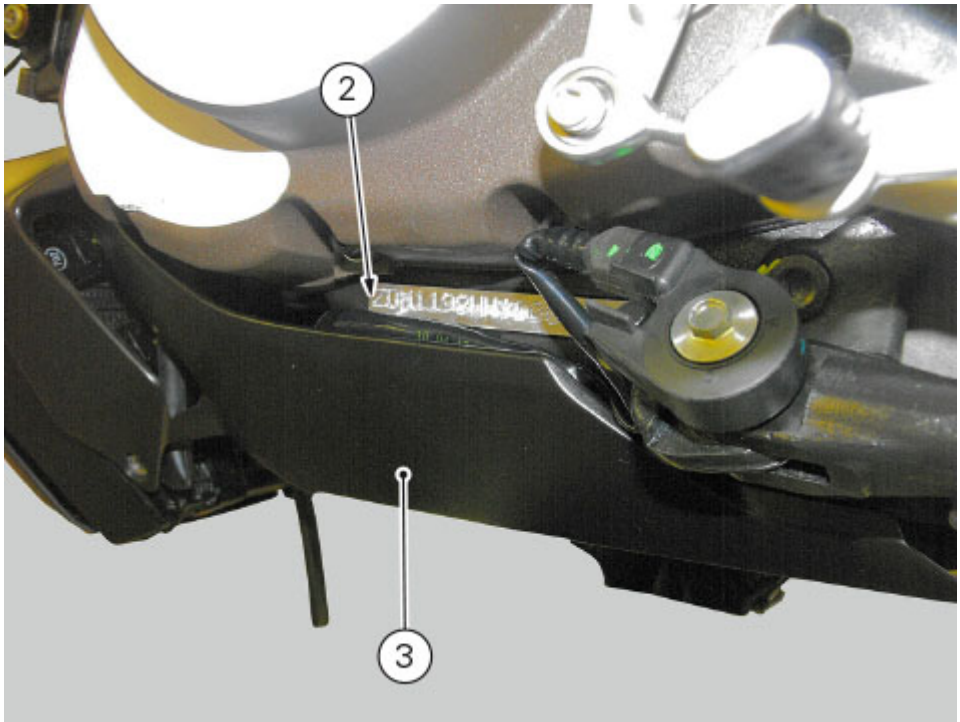

Working on both sides, remove screws (4) and cover (5).

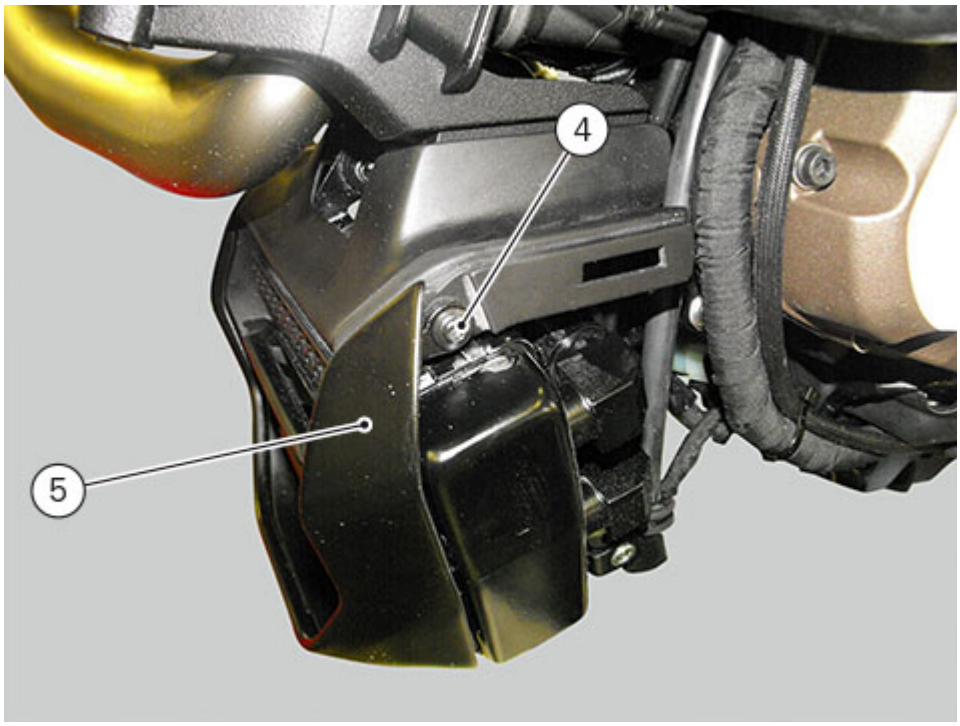

Loosen the four front screws (6) and remove cover (7).

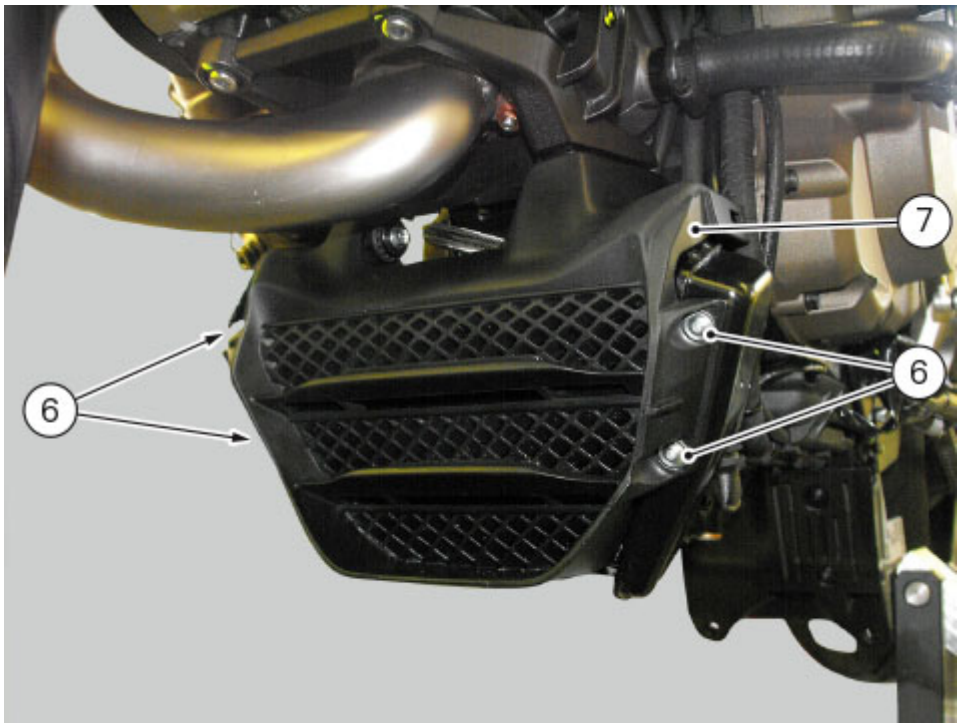

Disconnect the oil pressure switch connector (8) from the main wiring and remove ties (9).

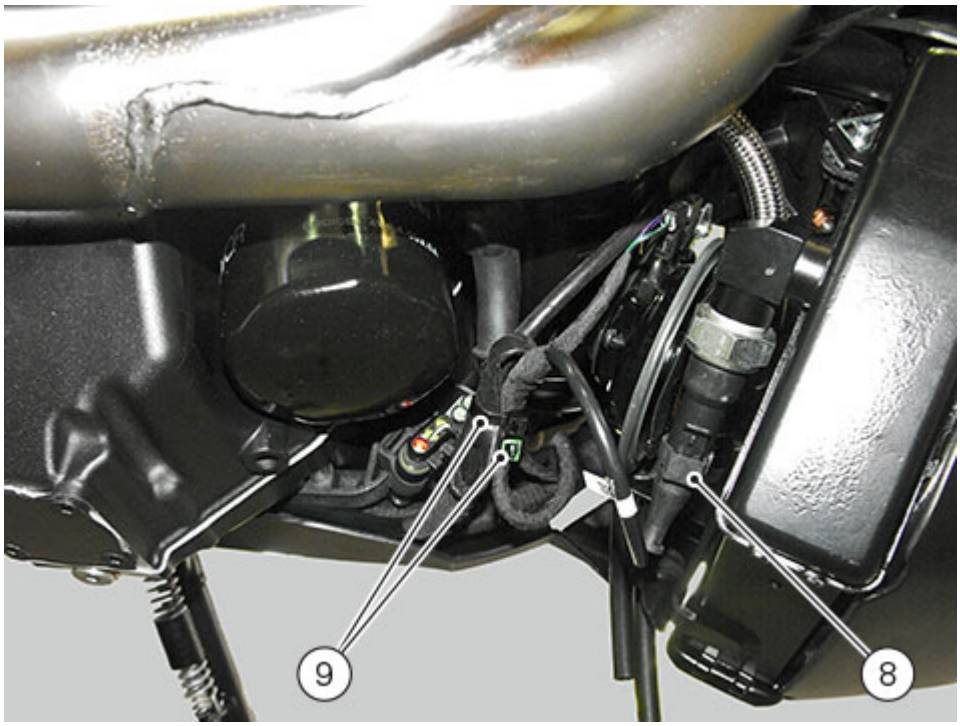



Loosen screw (11) of plate (12) and remove it.
Slide crankcase half hoses (13) and collect the relevant O-rings.

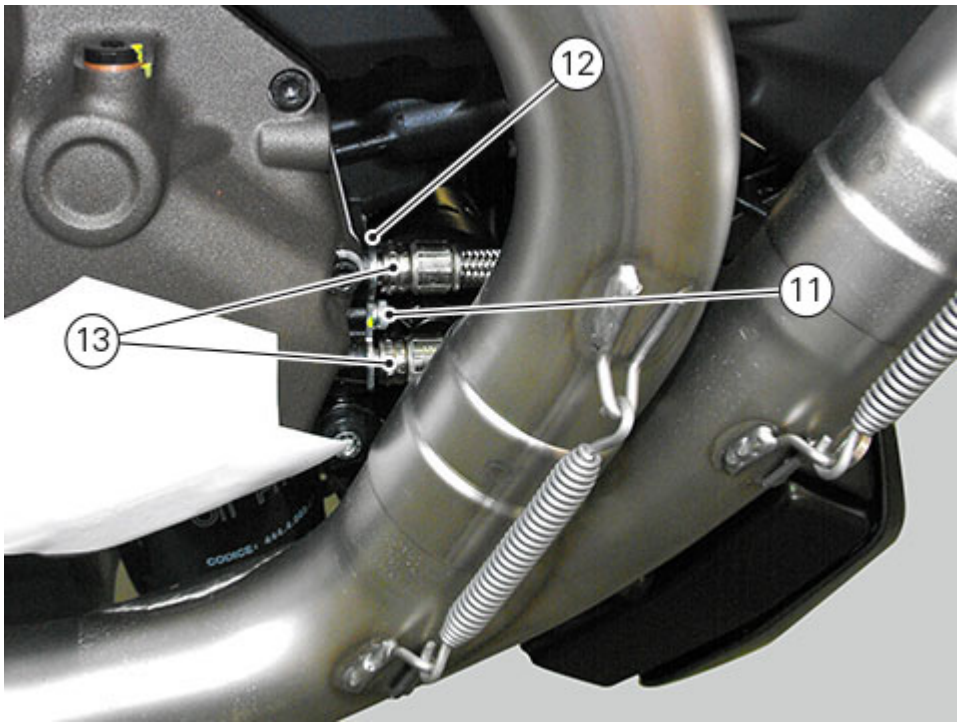

Loosen screw (14) and slide the oil cooler to the right and collect spacer (19).

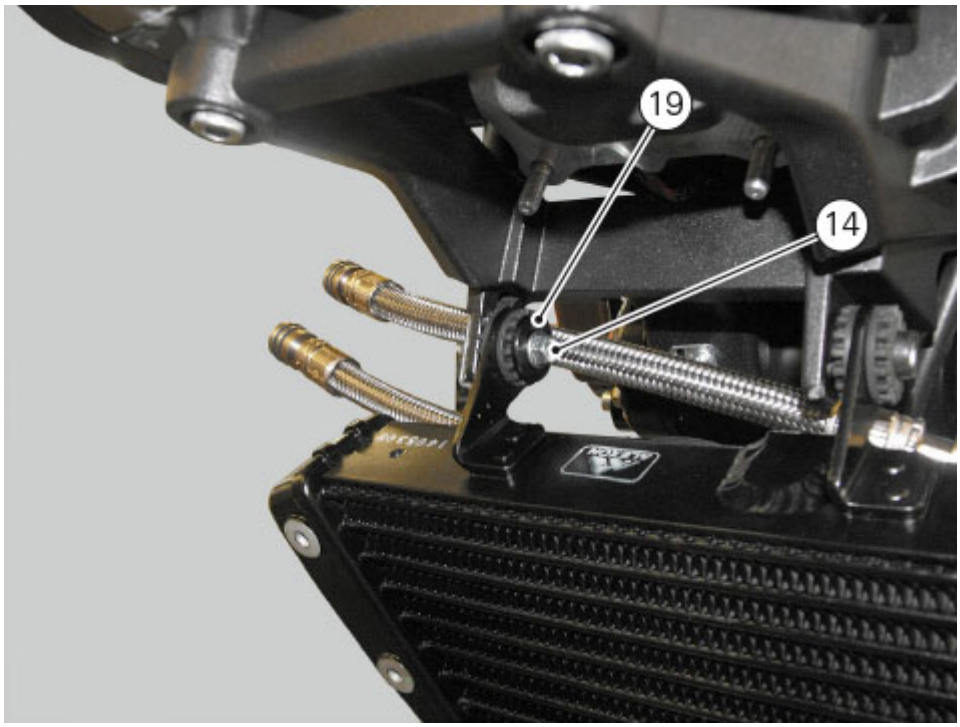

Loosen nuts (B) of pipes (15) from nipples (16) and disconnect them from the cooler.
Loosen nipples (16) from cooler (22) and collect seals (17).

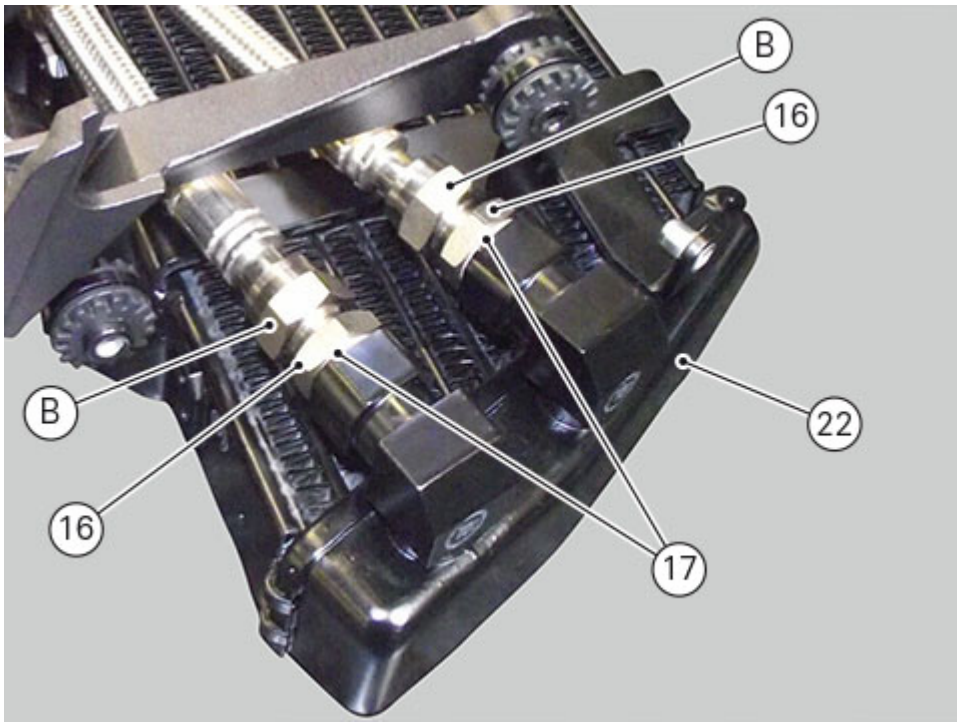
B
16
B
16
22
17

Refitting the water tank

If previously removed, refit the water tank retaining plate and tighten the three screws (14) to a torque of 8Nm ±10%.

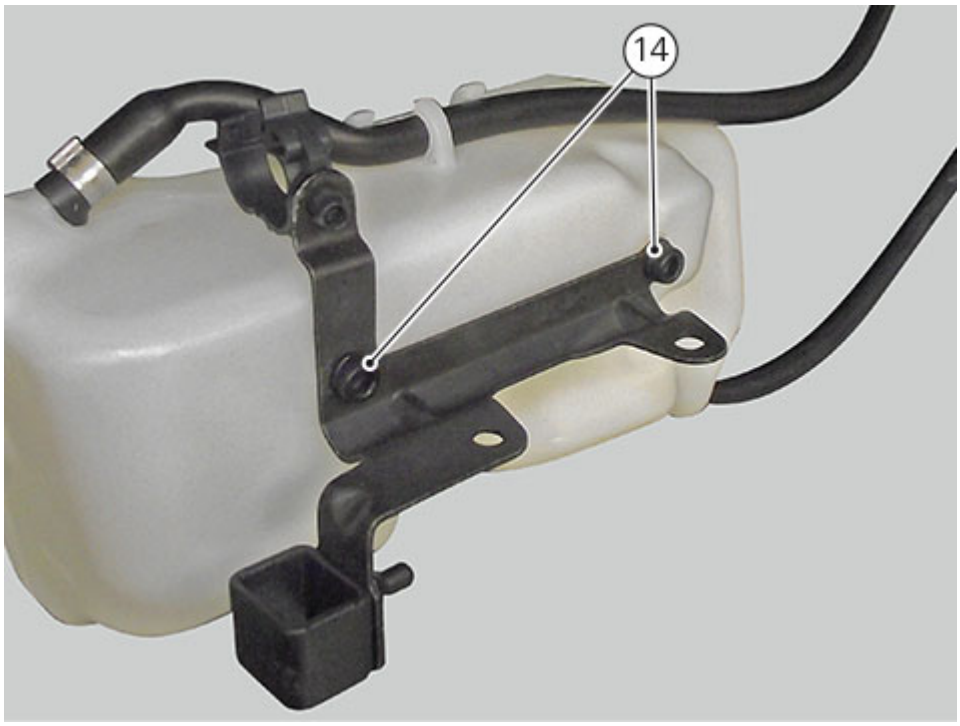

Position water tank (13) and tighten screws (9) with pre-applied threadlocker to a torque of 10 Nm ± 10%.
Position the breather pipe (11) on tabs (12) and fix it to the water tank with clamps (10).

Note
If it proves hard to fit the tubes in the relevant unions, it is recommended to use RUBBER LUBRICANT, and apply some on the unions.

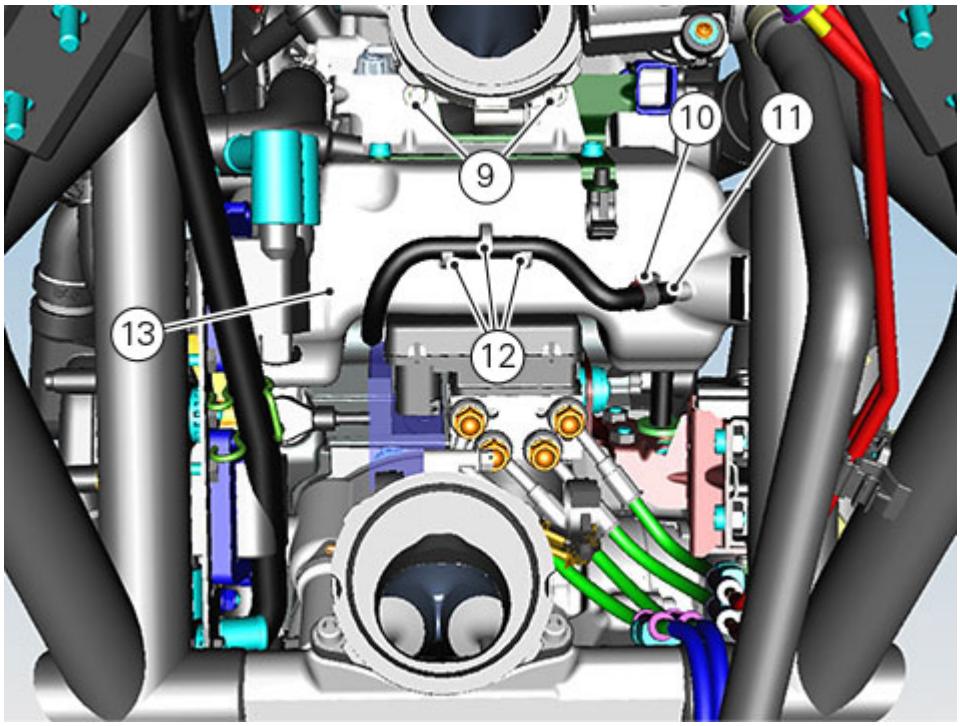

Connect the pick-up sensor (6), insert the wiring in cable rings (7) and position the connector in support (8).
Tighten spacer (5) to a torque of 8 Nm, check the presence of seal (A) and tighten screw (4) to 8Nm±10%.

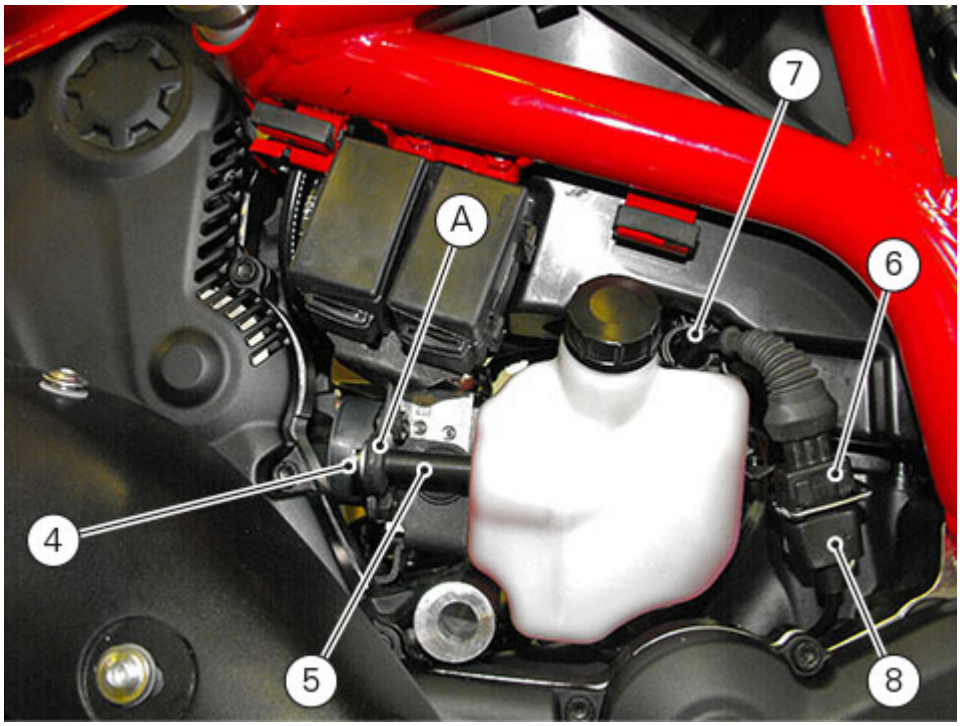

Position rubber spacer (3) on the side cover (2).

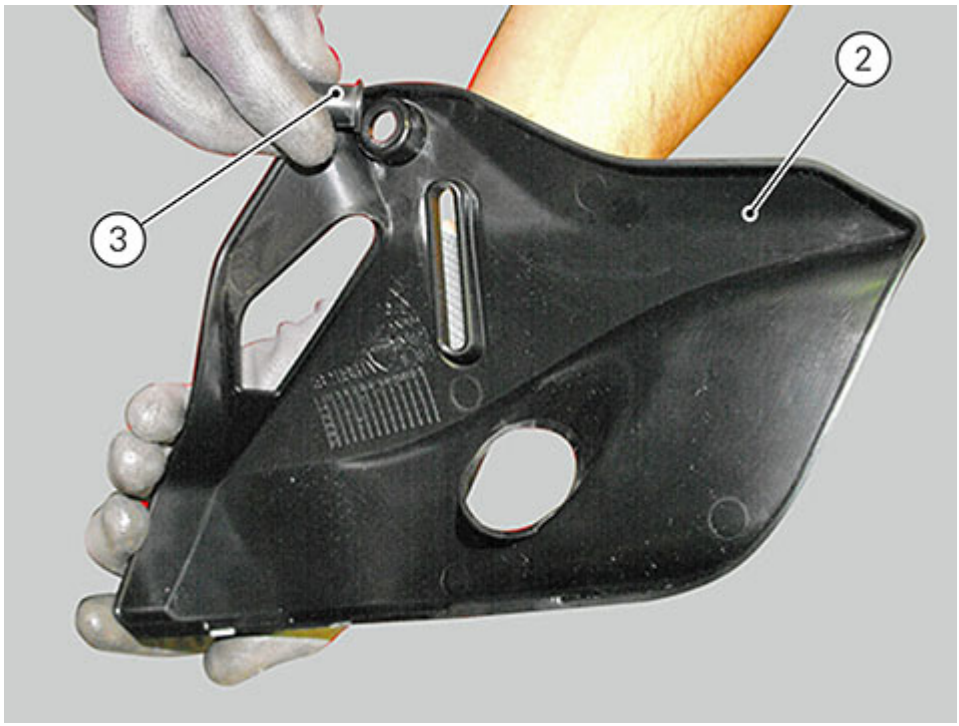

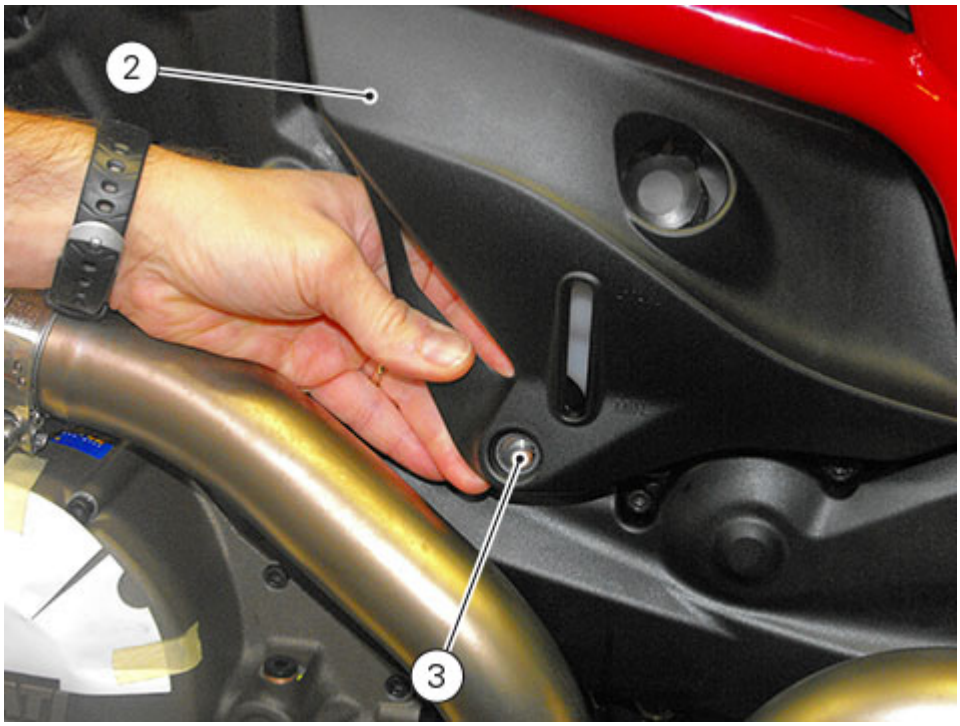

Fit the cover on the vehicle by pressing to engage it on tabs (B) on the frame.
Tighten the screw (1) to a torque of 1Nm ± 10%.

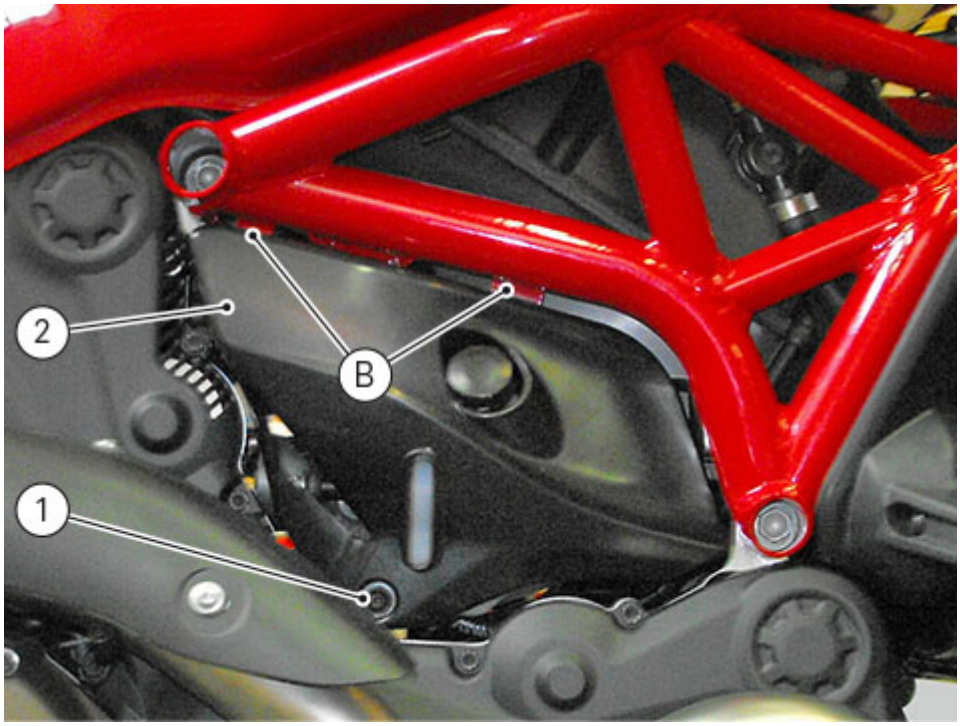

Insert the tank-radiator hose (17) and fit clamp (16).

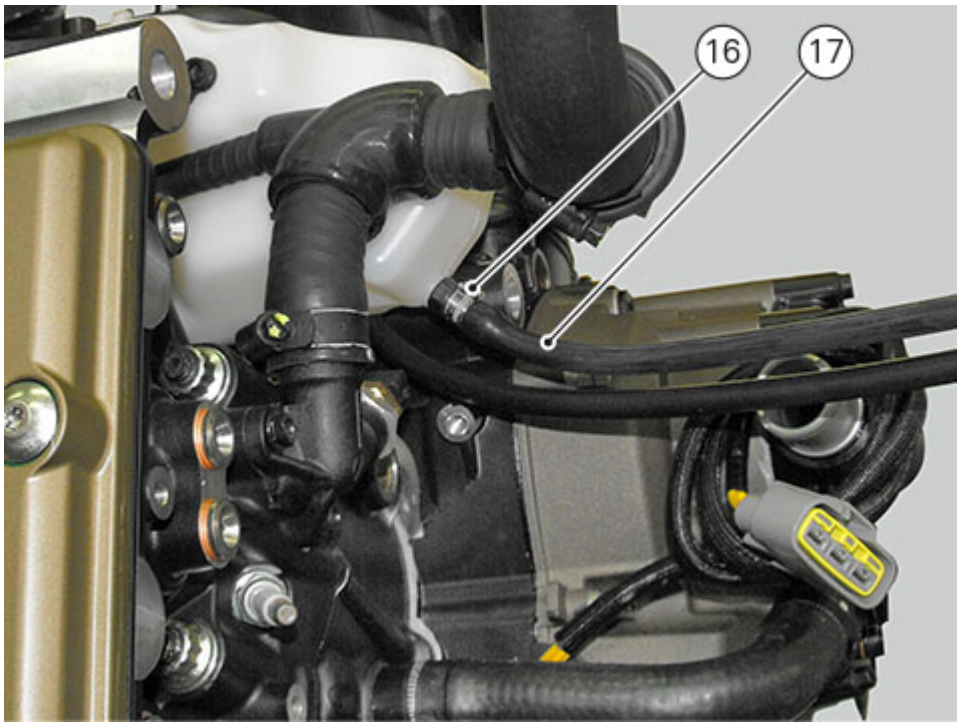

Tighten screws (14) of the lower side cover (15) to a torque of 5Nm±10%.
Engage the LH side cover (13) inside tabs (C), and tighten screw (12) to a torque of 3Nm±10%.

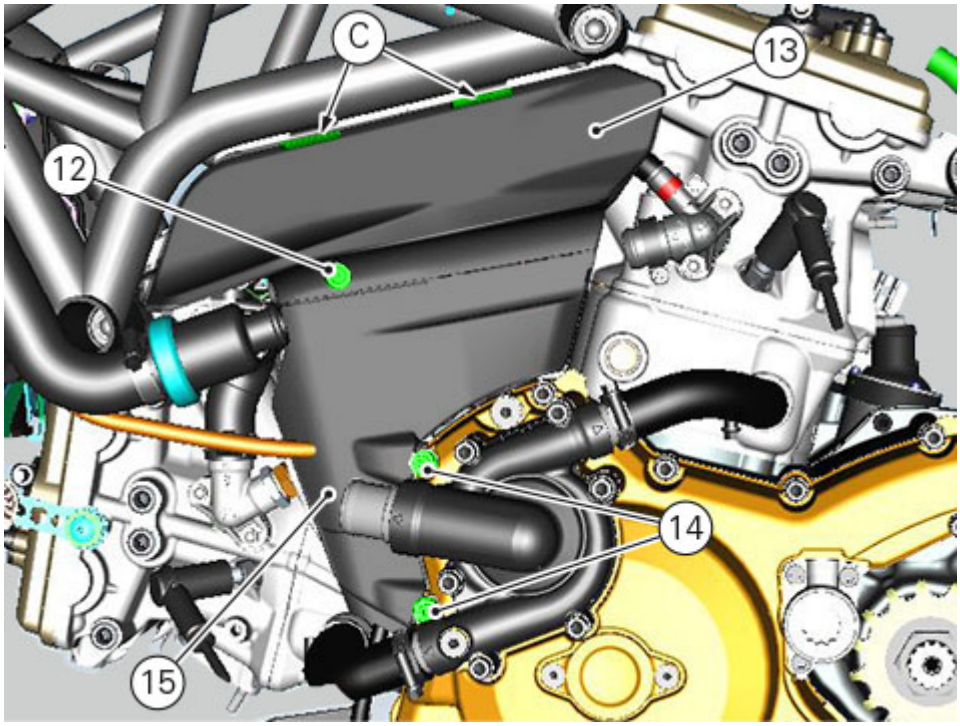

Position the vertical head-thermostat hose (10) and fix its ends by tightening clamps (9) to a torque of 2.5Nm ±10%.
Position the thermostat - radiator hose (11) and fix its end by tightening clamp (9) to a torque of 2.5Nm±10%.

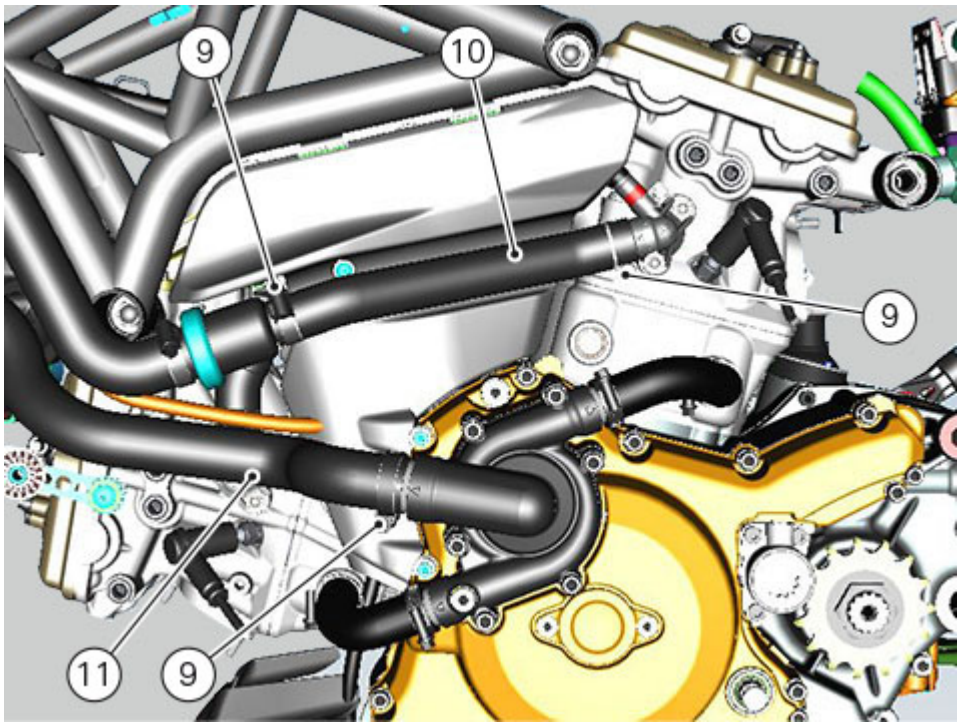

Restore the hose correct position.

Refit the airbox and the throttle body (Refitting the airbox and throttle body).
Refit the fuel tank (Refitting the fuel tank).
Refit the seat (Refitting the seat).
Refill the coolant circuit (Changing the coolant).

Removing the water tank

Drain the coolant (Changing the coolant).
Remove the seat (Removing the seat).
Remove the fuel tank (Removing the fuel tank).
Remove the airbox and the throttle body (Removing the airbox and throttle body).

Work on the right side to loosen screw (1) and remove the lateral cover (2).

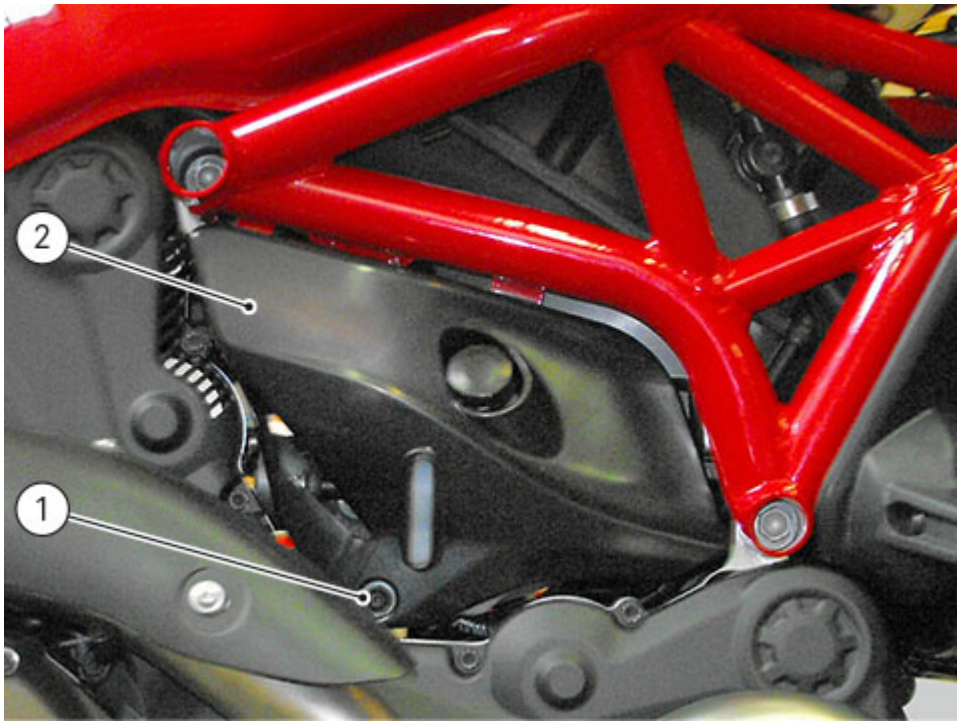

Collect spacer (3).

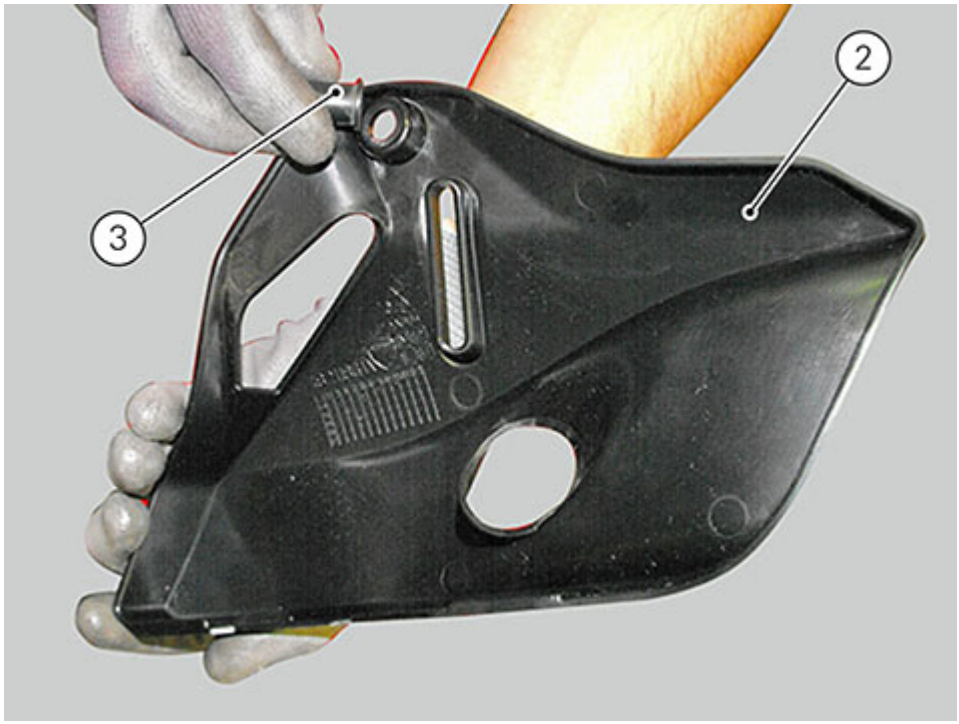

Undo screw (4) and collect spacer (5).
Disconnect the pick-up sensor connector (6) by releasing it from cable ring (7) and seat (8).

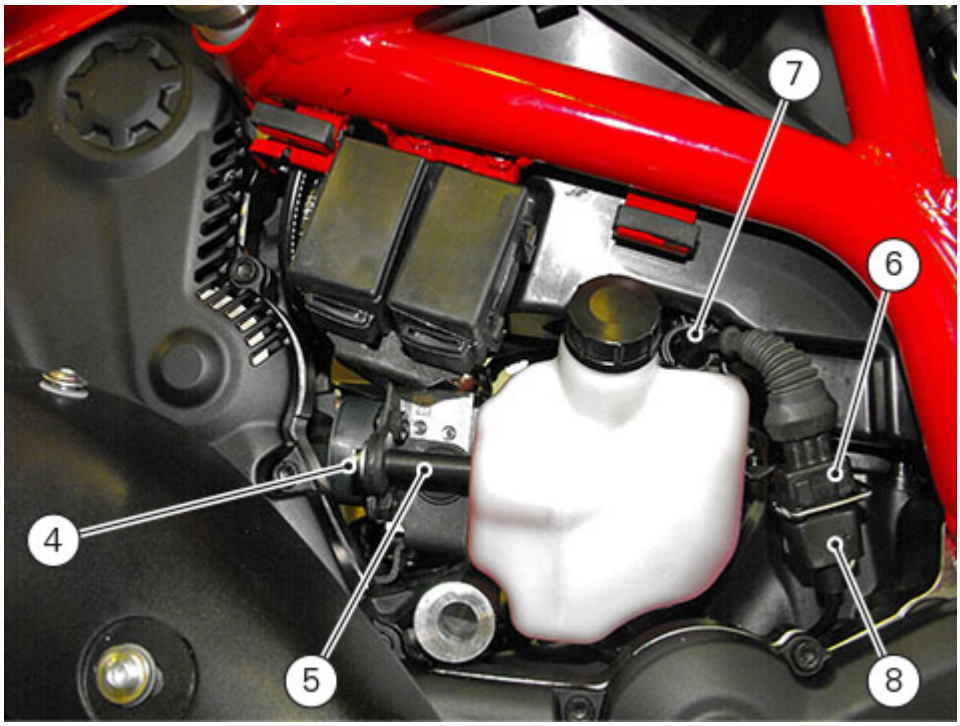

Work on the left side to loosen clamps (9).
Remove the vertical head-thermostat pipe (10).
Move the thermostat-radiator pipe (11).

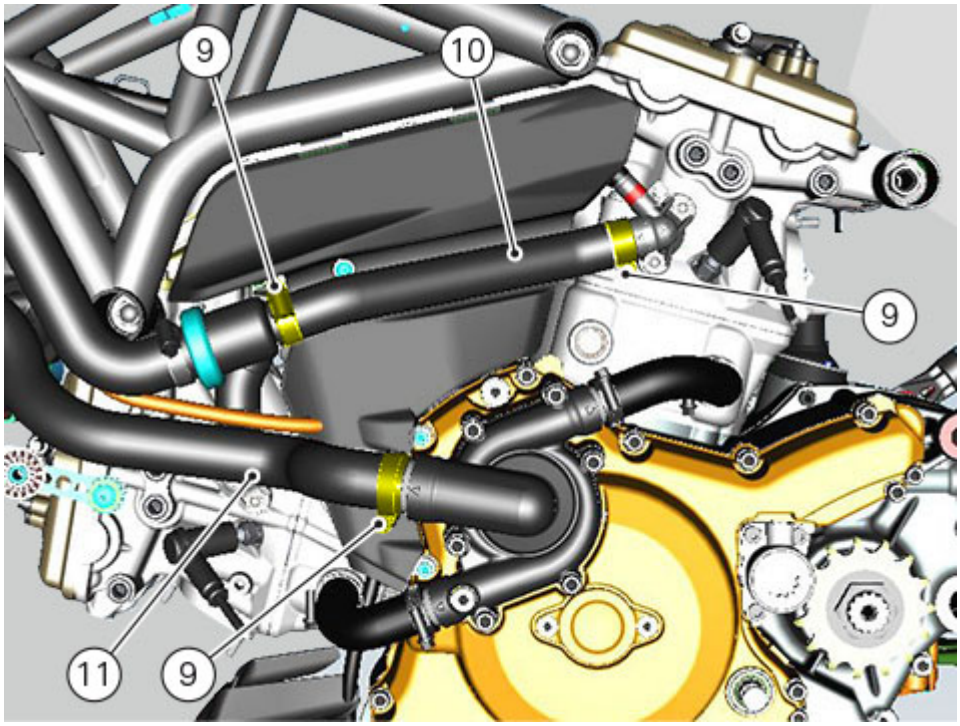

Undo screw (12) and remove the LH cover (13).
Undo screws (14) and remove the LH lower side cover (15).

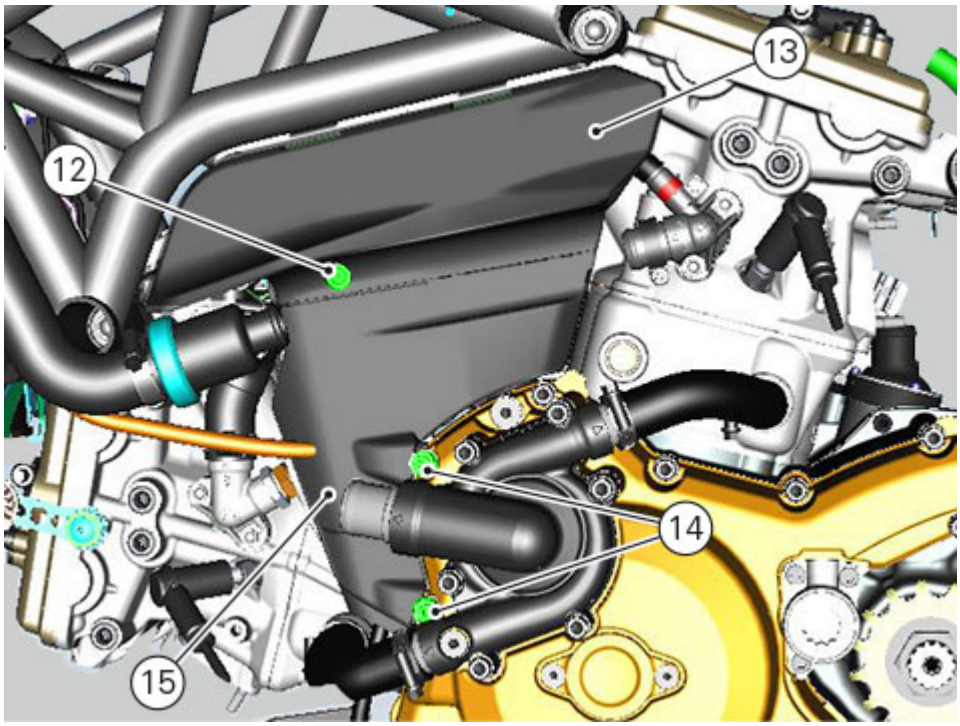

Remove clamp (16) and radiator-tank hose (17).

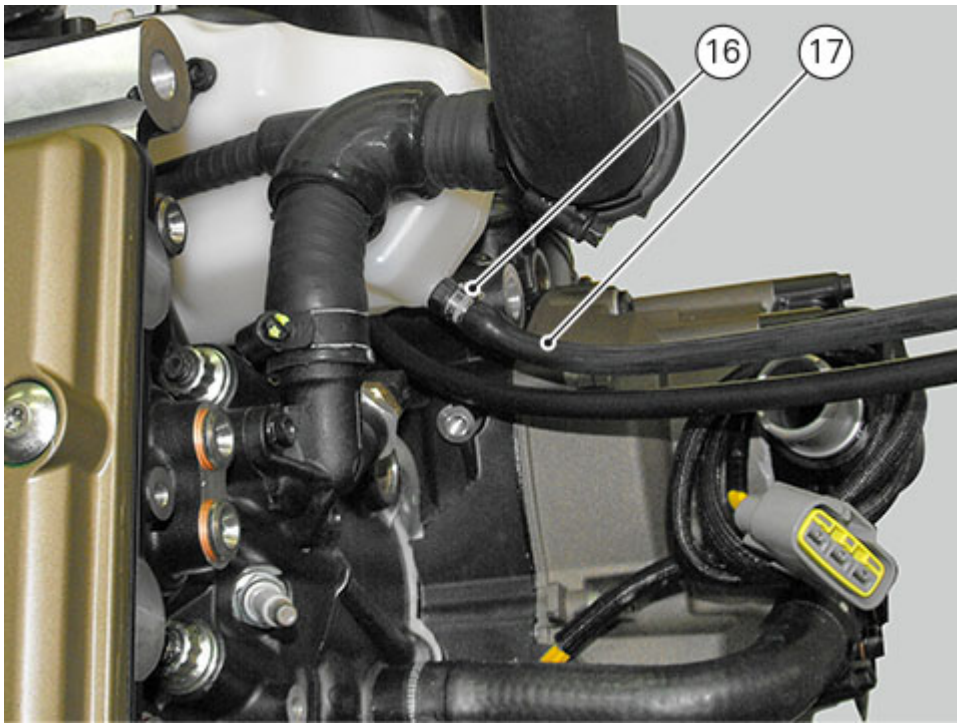

Loosen the two screws (9) of the water tank retaining plate.
Remove clamps (10) and breather pipe (11), by releasing it from tabs (12).
Remove water tank (13).

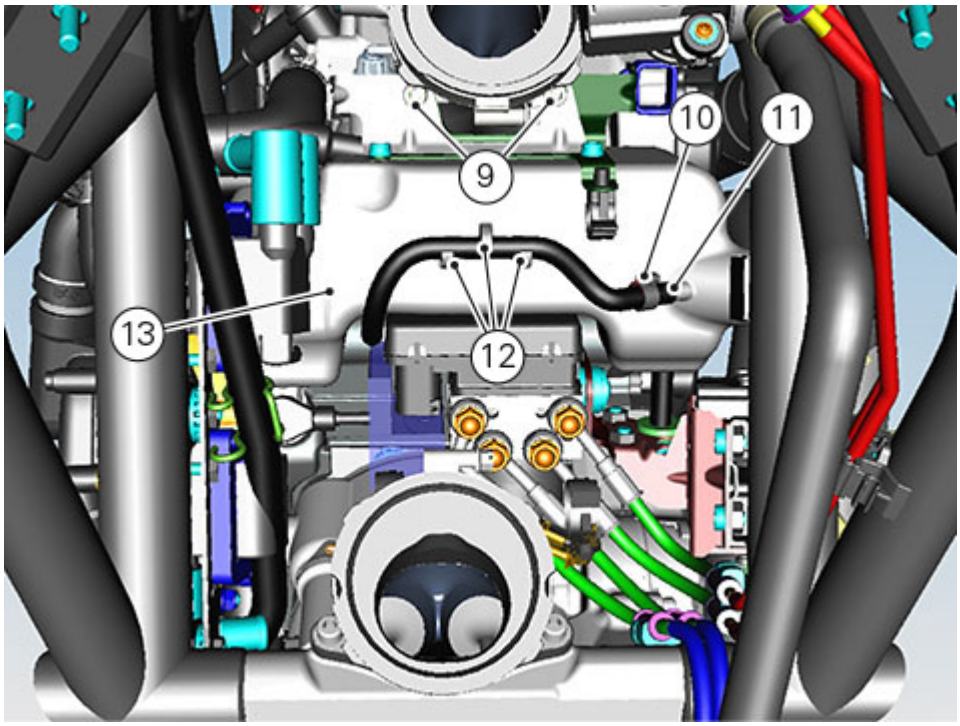

If necessary, loosen screws (18) and remove the water tank retaining plate.

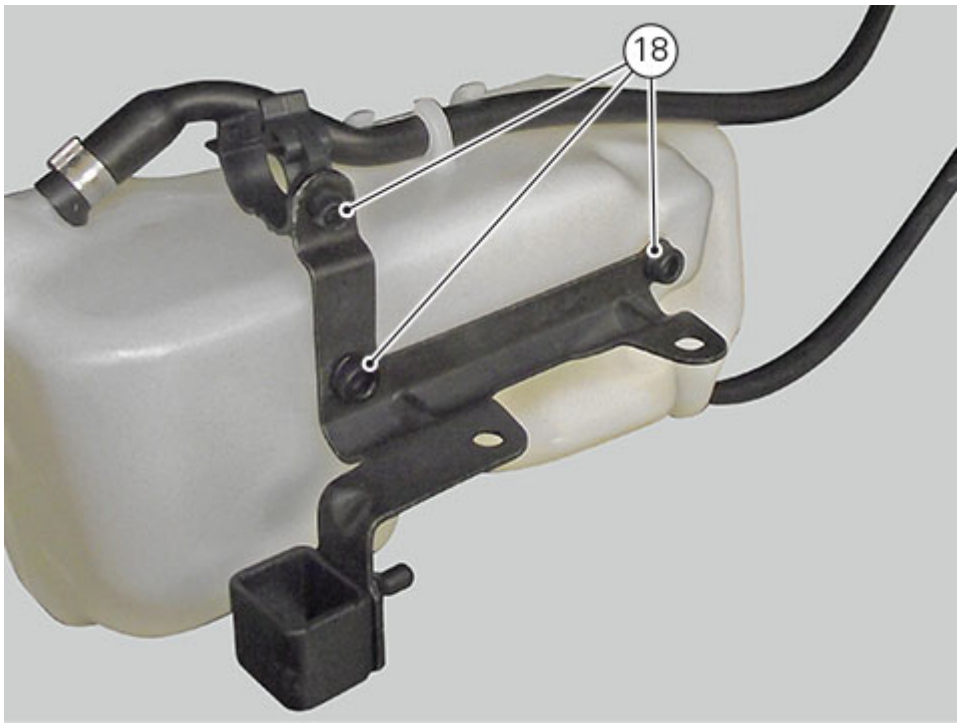

Refitting the cooling system hoses and unions

Install an O-ring (12) in the seat of the horizontal head union (11) and one in vertical head union seat (10).
Fix union (11) on the horizontal head with screws (9) with specified threadlocker and tighten them to 6 Nm (Min. 5 Nm - Max. 7 Nm).

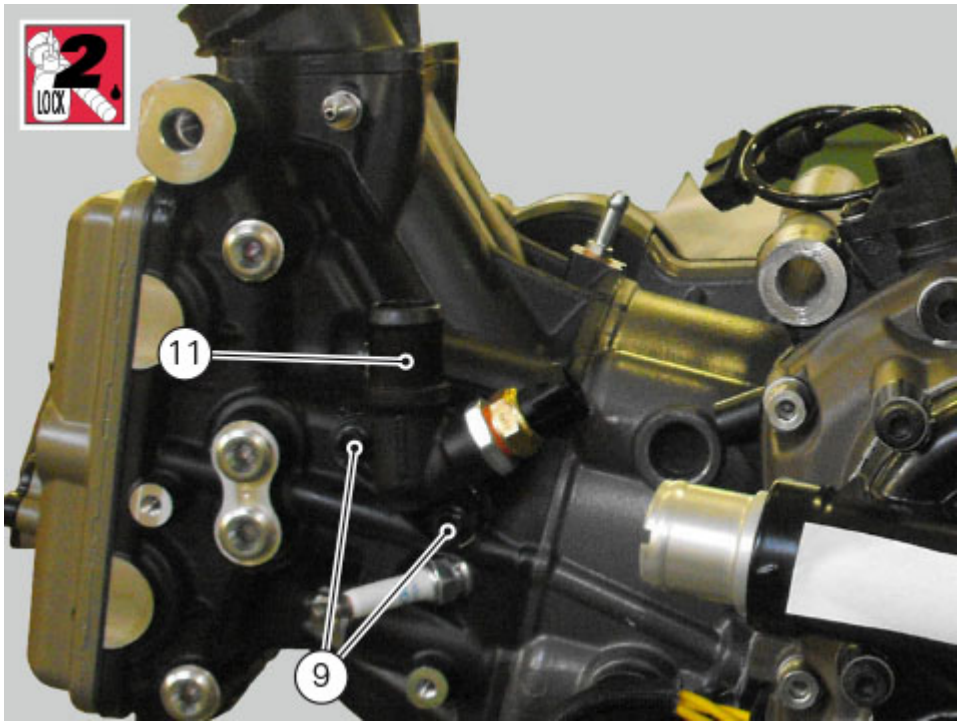

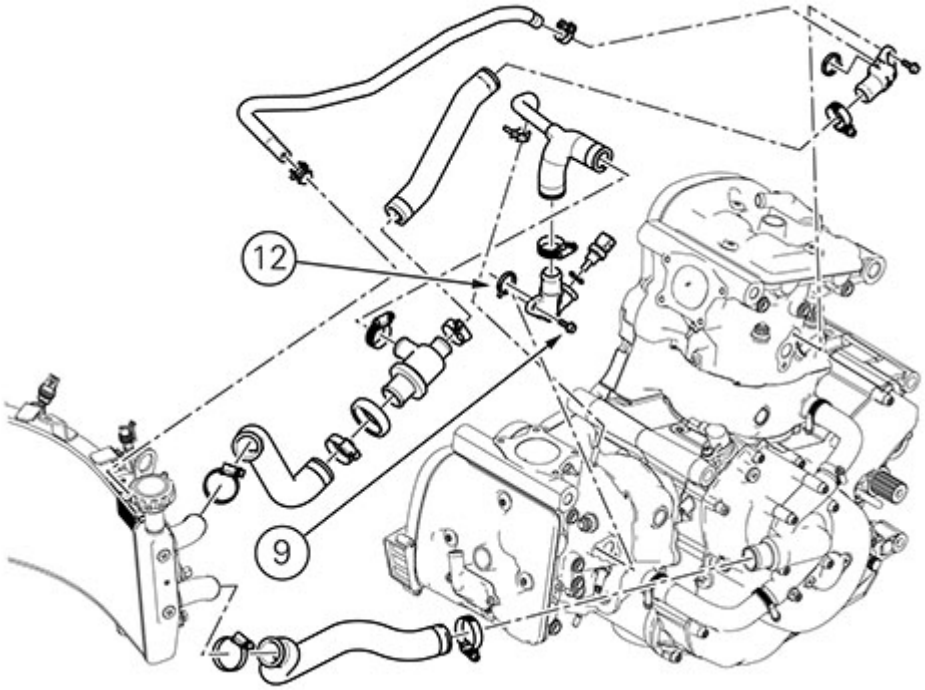

Fix union (10) on the vertical head with screws (9) with specified threadlocker and tighten them to 6 Nm (Min. 5 Nm - Max. 7 Nm).

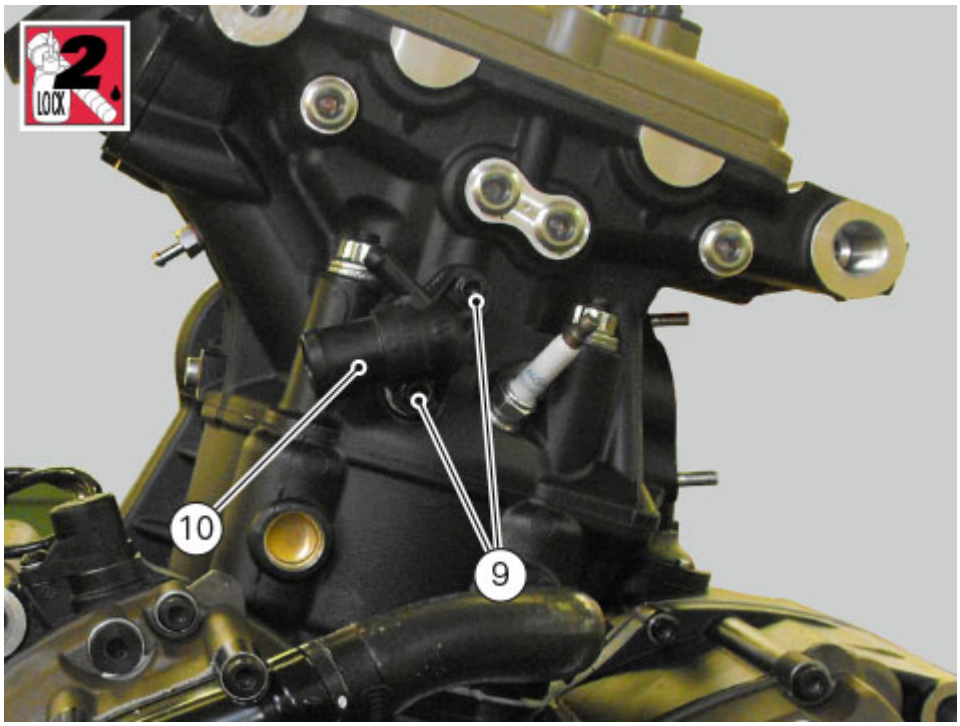

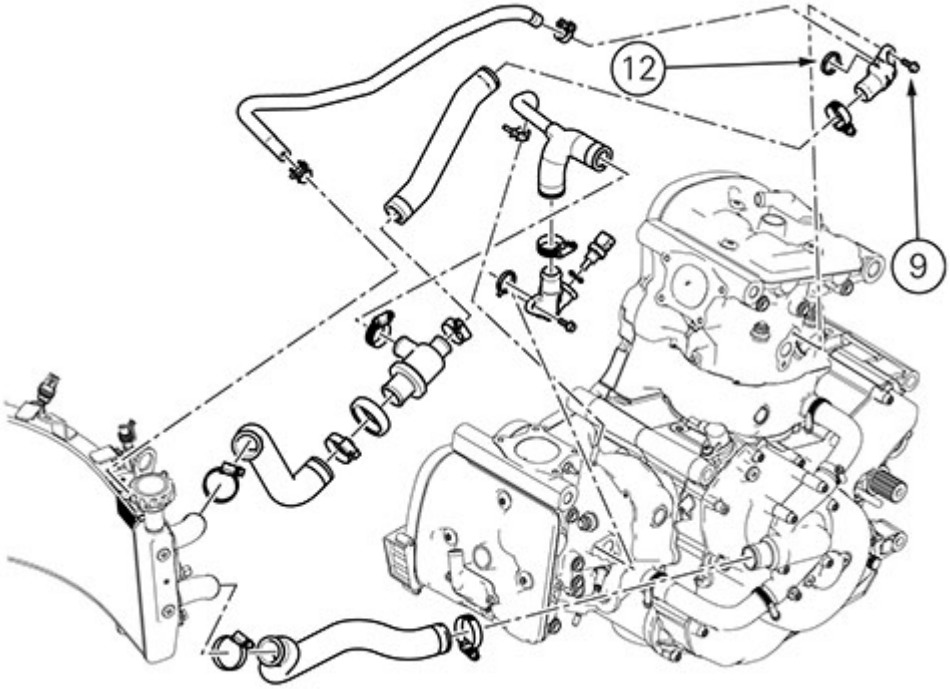

To assemble the thermostat unit (6) - thermostat/cylinder head hose (7) - thermostat/cylinder head hose (8) - radiator/thermostat hose (4), position clamps (1) and tighten them to a torque of 2.5 Nm ± 10%.

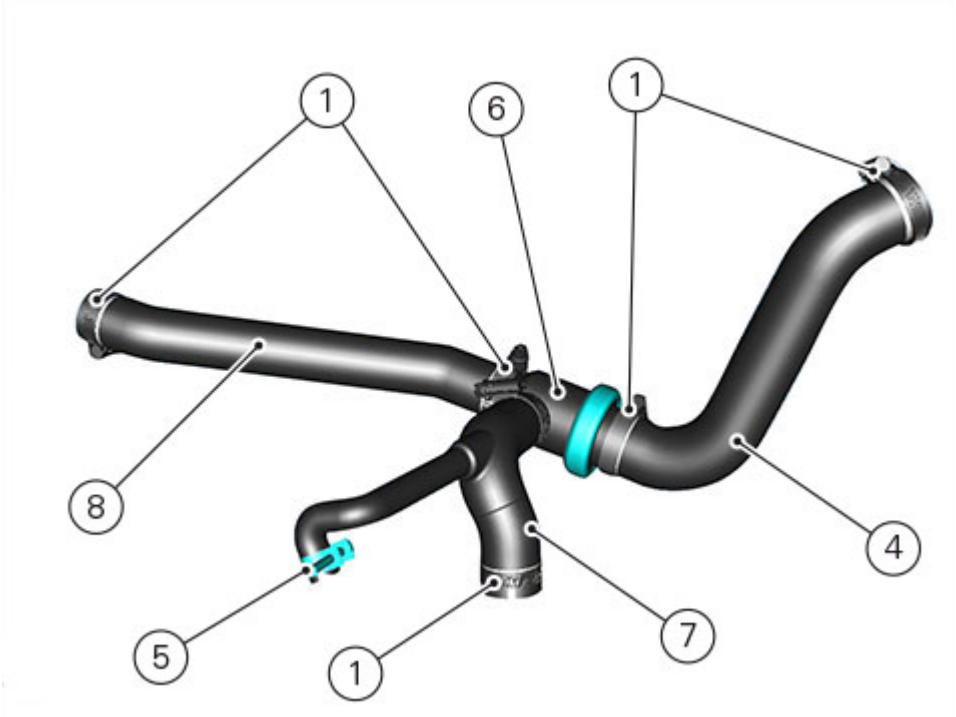

Pay special attention to the hose and thermostat routing, according to references (A).

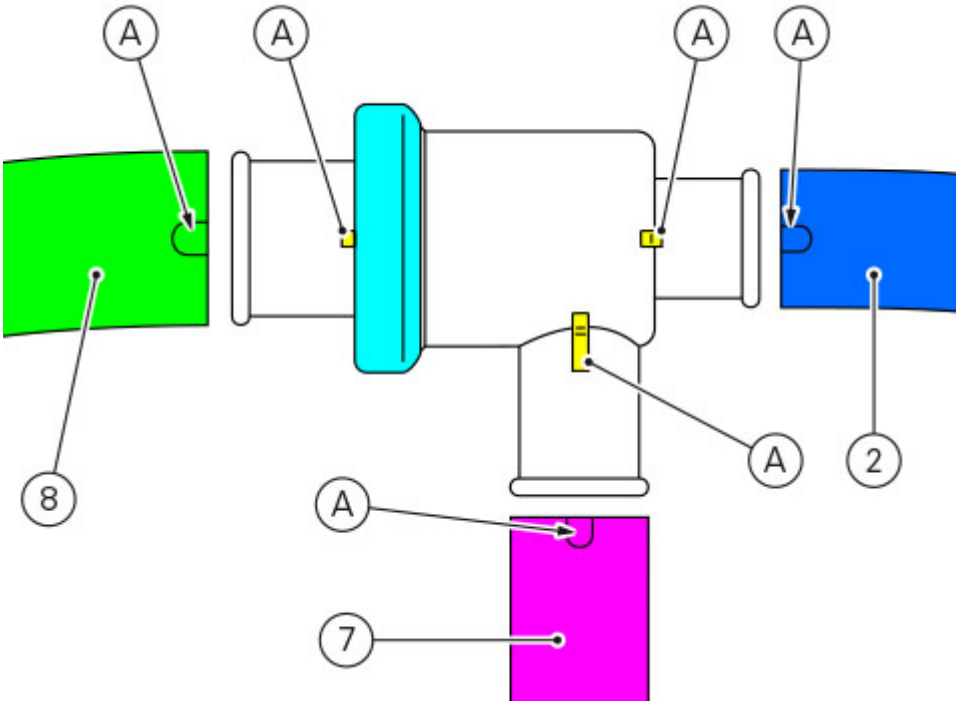

Position the thermostat union (6) - thermostat/cylinder head hose (7) - thermostat/cylinder head hose (8) with clamps (1) and (5) and tighten clamps (1) to 2.5 Nm ± 10% and clamp (5) to 1 Nm ± 10%.
Position the pump/radiator hose (2) and the radiator/thermostat sleeve (4) with the clamps (1) and tighten the clamps to radiator (3) to the specified torque of 3 Nm ± 10%.

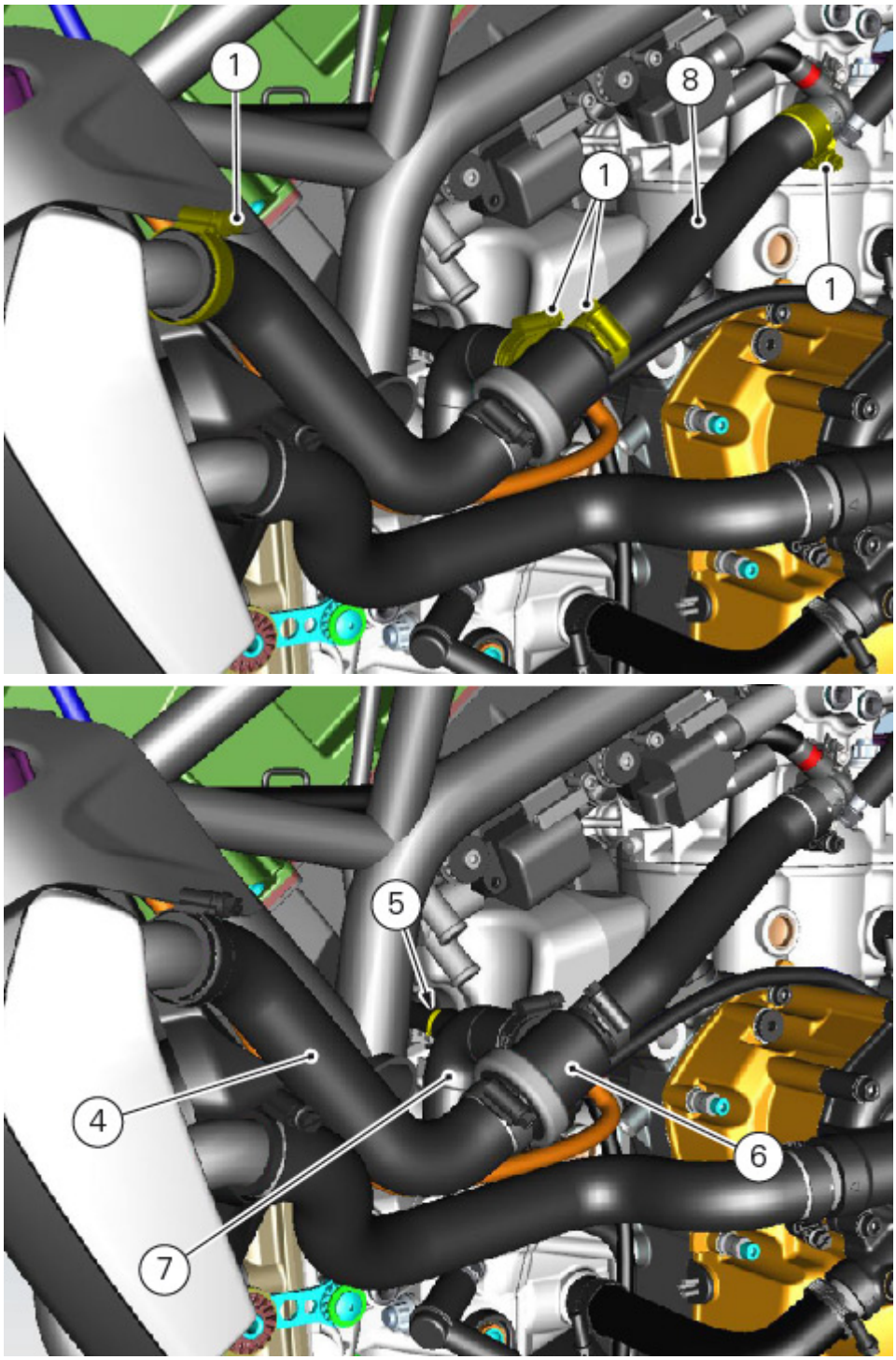
1
8
1
1
5
4
6
7

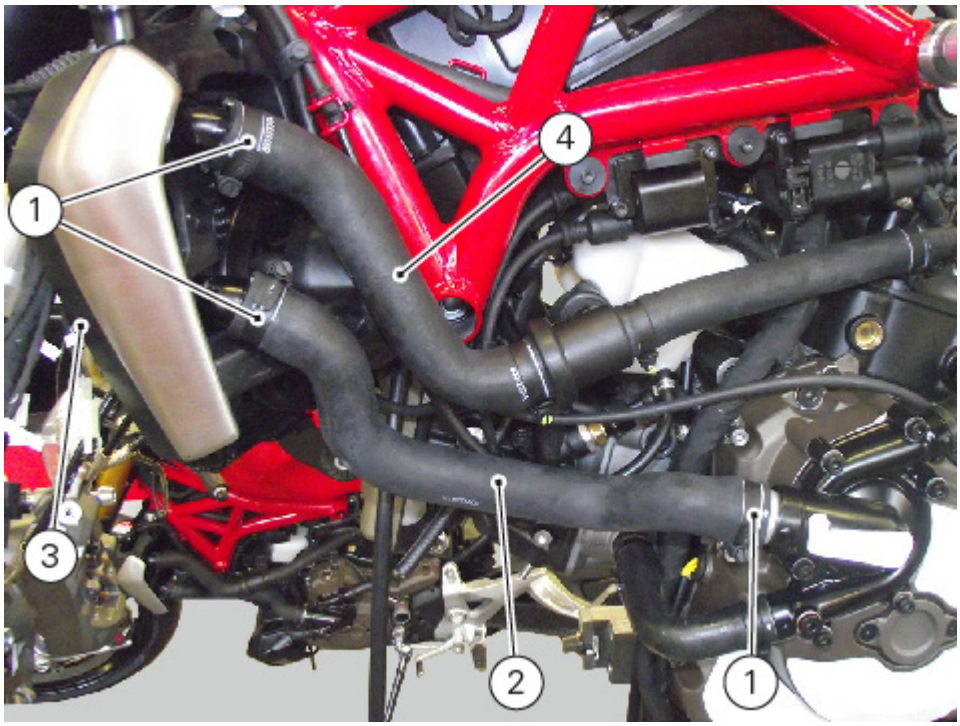

Refit the two LH side covers (Refitting the water tank).
Fill the cooling system (Changing the coolant).

Removing the cooling system hoses and unions

Remove the two LH side covers (Removing the water tank).
Drain the coolant (Changing the coolant).

Loosen clamps (1) retaining the water radiator (3) hose (2) to the pump and the fixing clamps of the radiator/thermostat hose (4) to the thermostat.

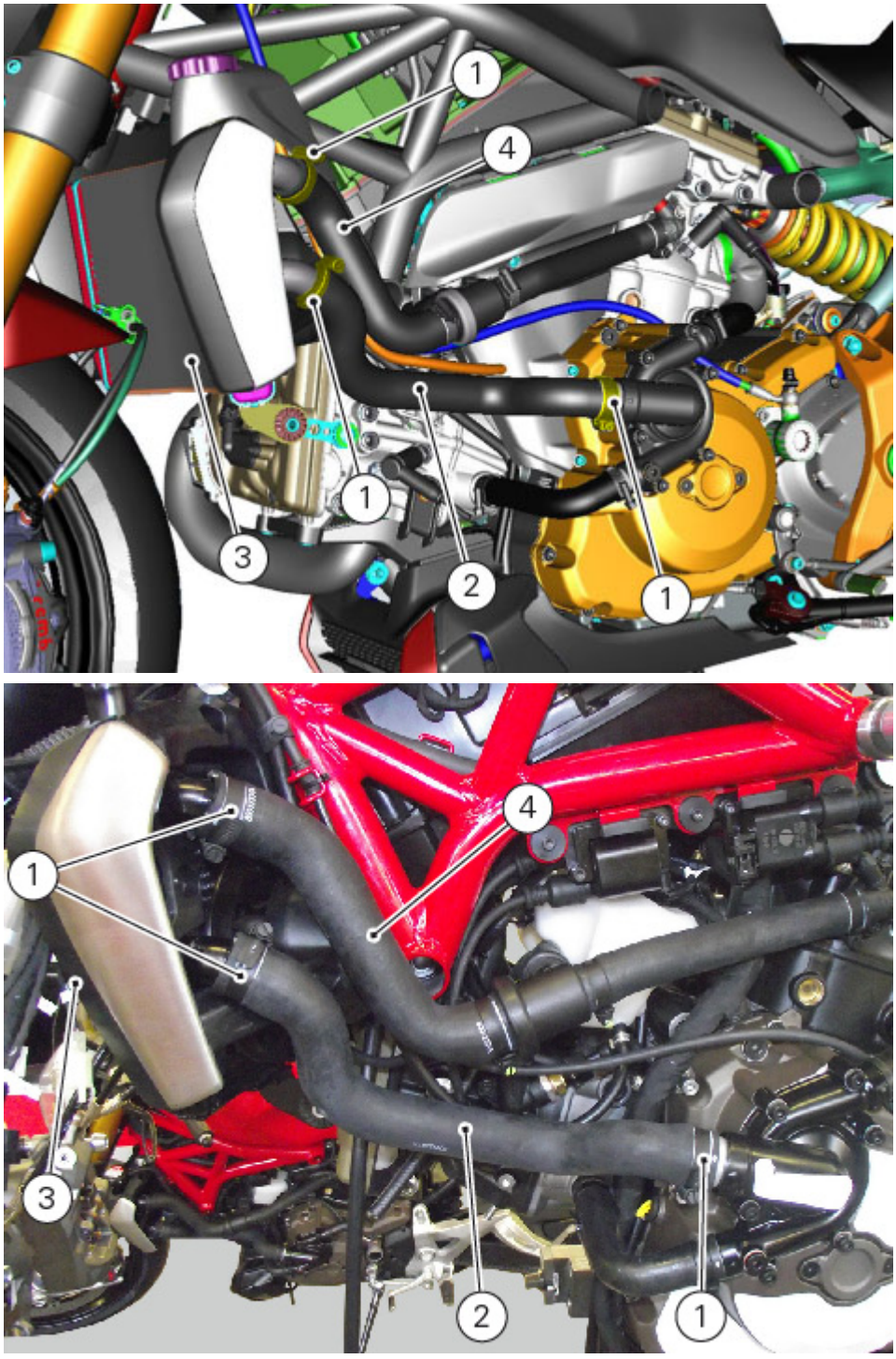

Loosen the clamps (1) and (5) securing the thermostat unit (6) – thermostat-cylinder head hose (7) – thermostat-cylinder head hose (8).

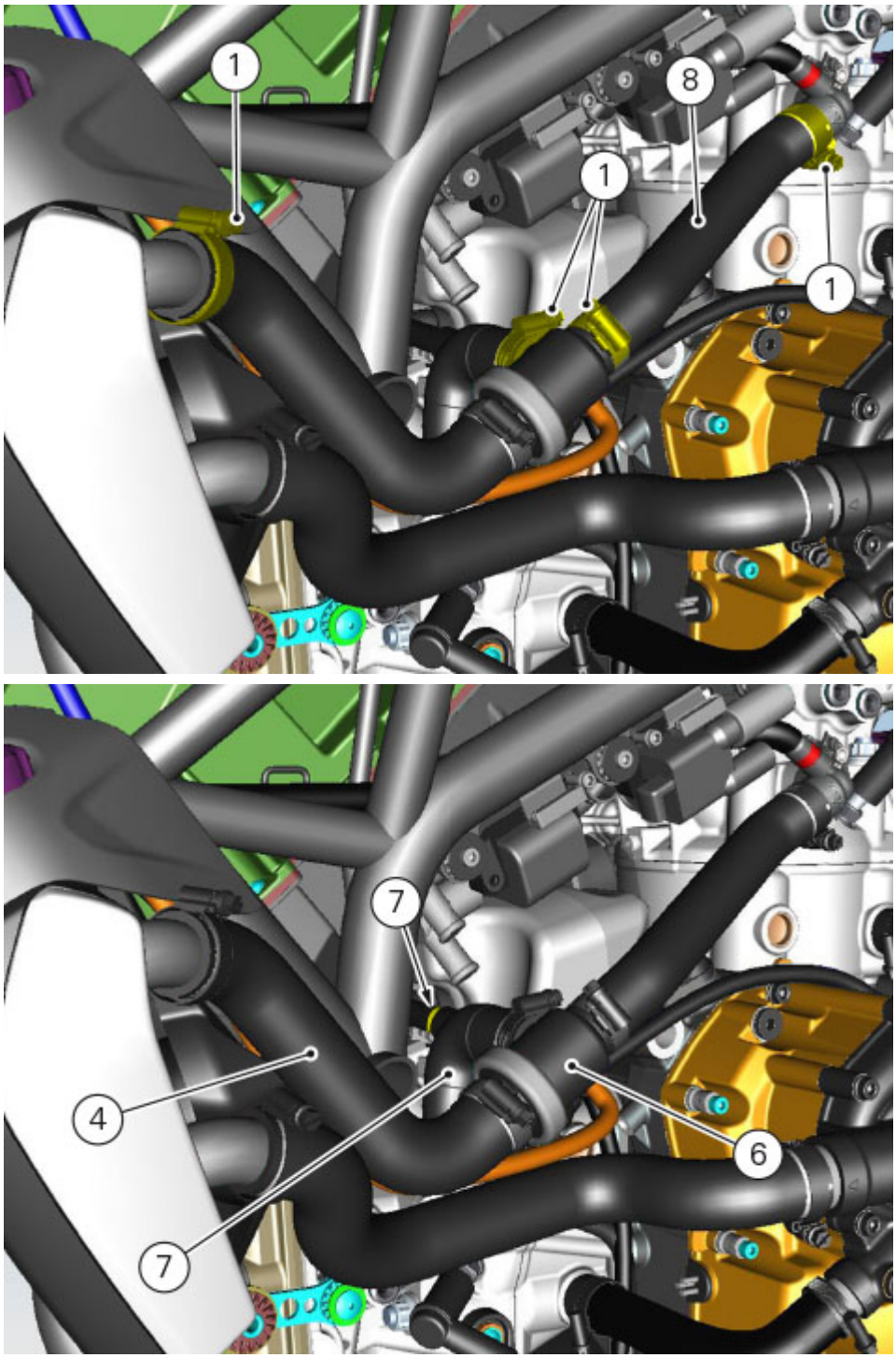

Loosen the clamps (1) and (5) to disassemble the thermostat unit (6) - thermostat/cylinder head hose (7) - thermostat/cylinder head hose (8) and radiator/thermostat hose (4).

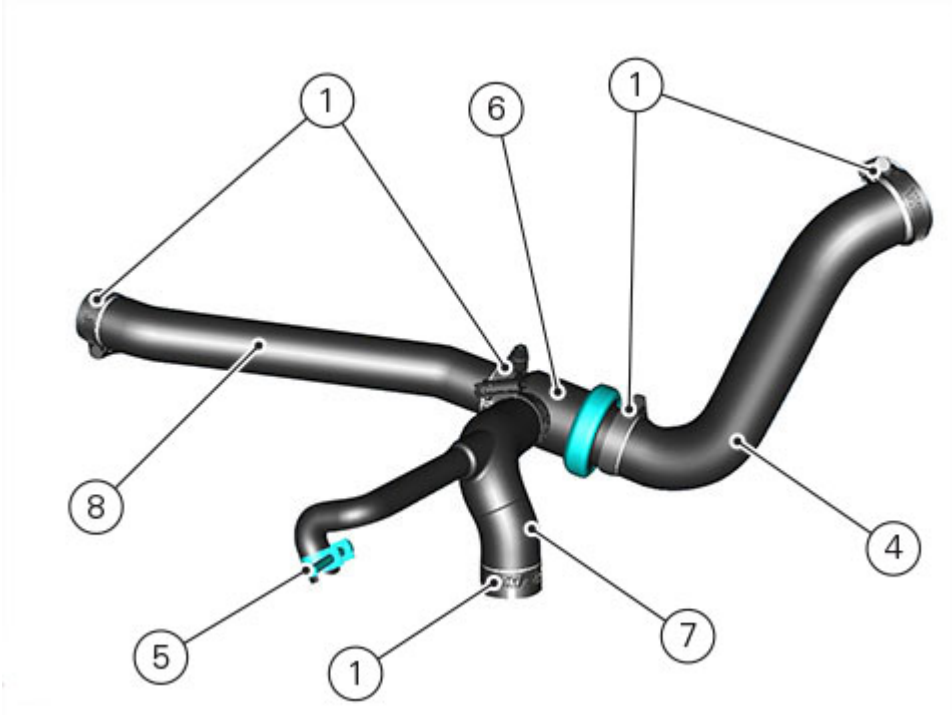

Check the correct position of hoses (4), (7), (8) and thermostat (6).
Position them as shown in the figure, respecting the indicated references (A).

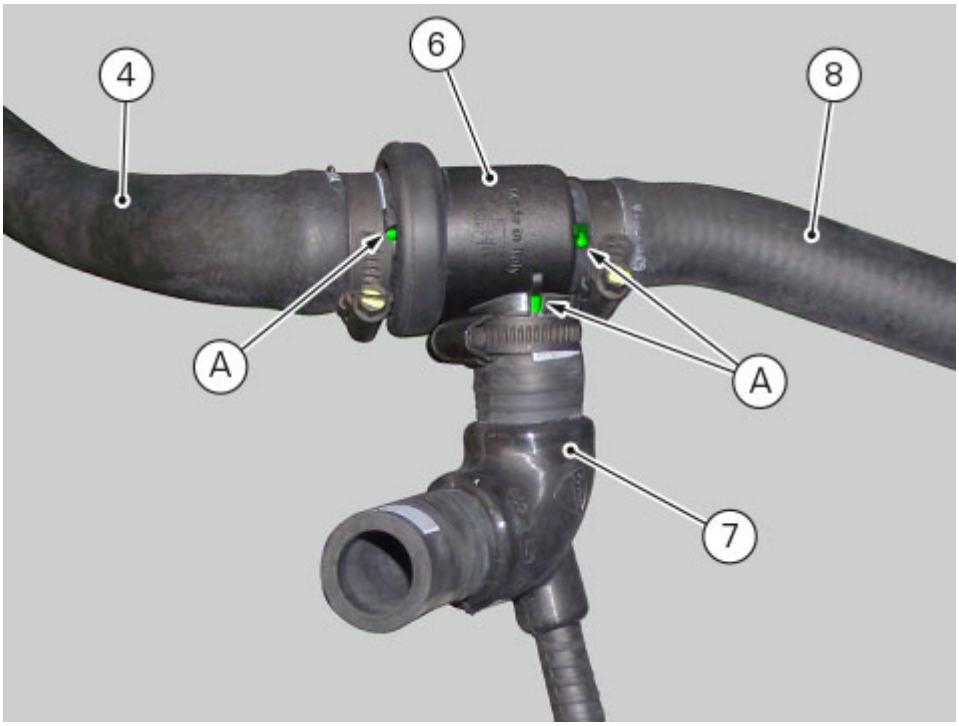

Loosen the screws (9) and remove union (10).
Recover the O-ring (12) located between the union and the vertical head.
Undo the screws (9) and remove the horizontal cylinder head union (11).

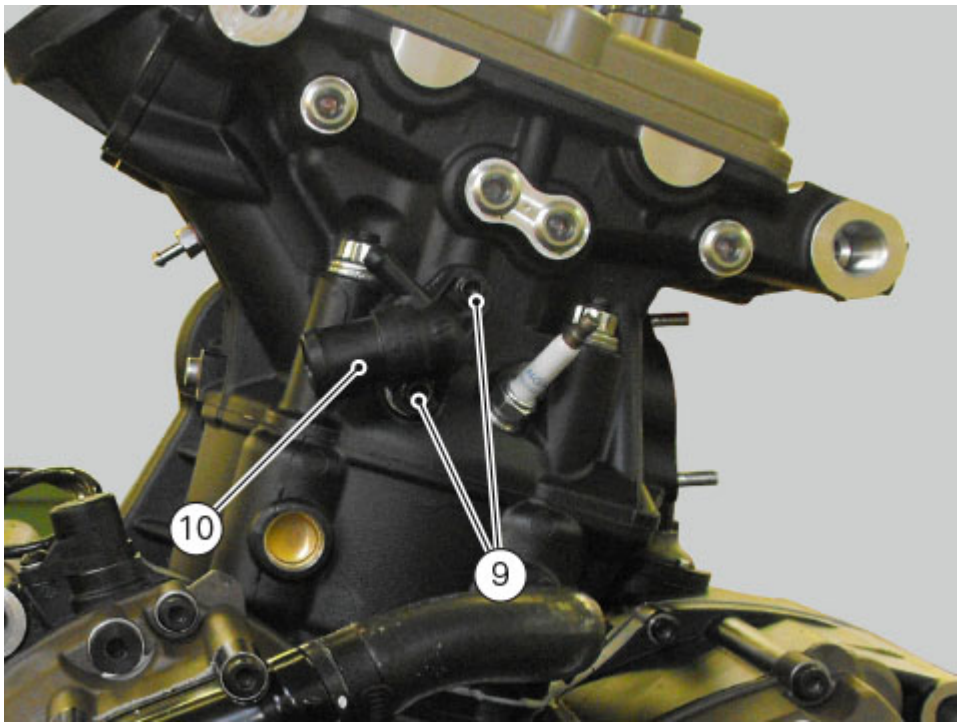

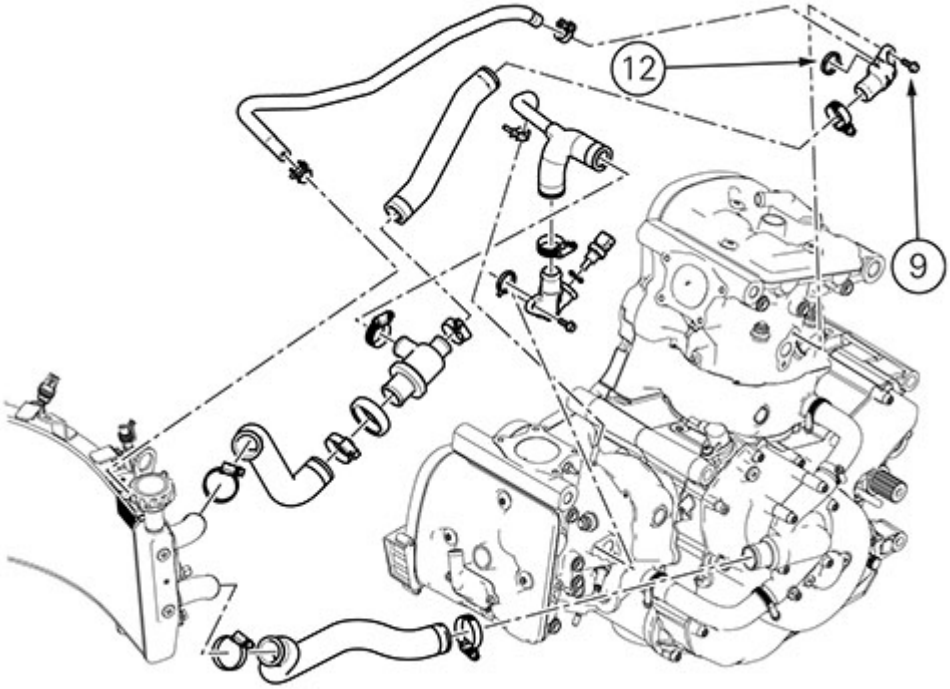

Collect the O-ring (12) located between the union and the horizontal head.

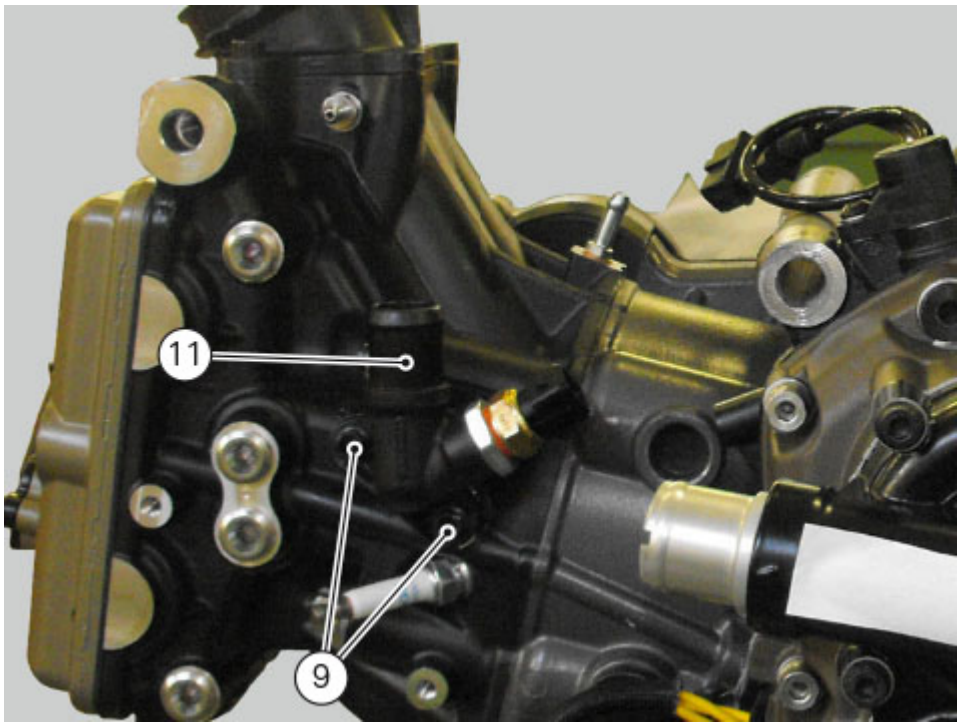

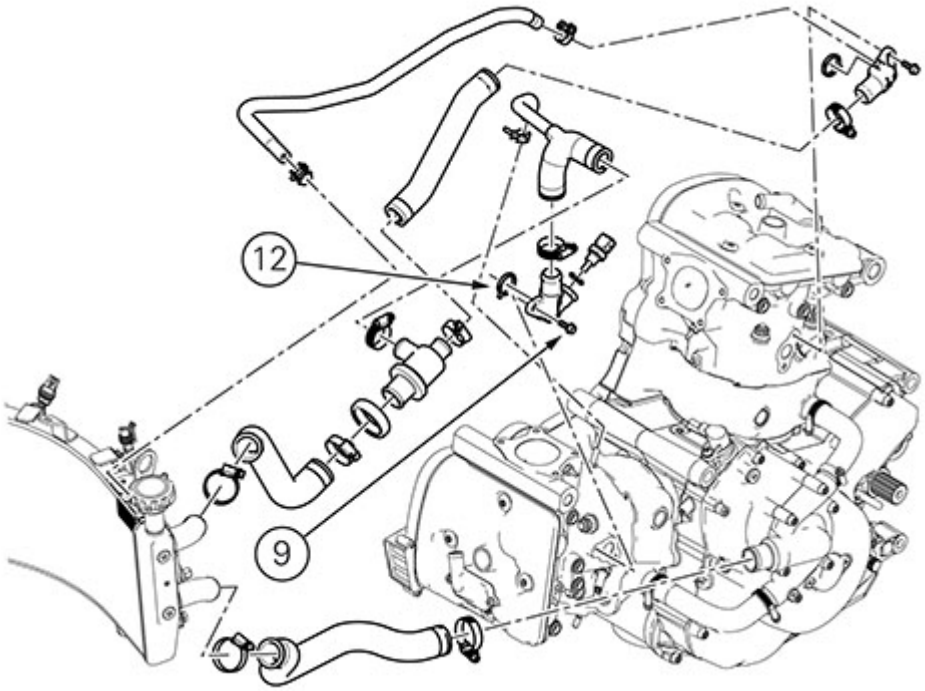

Important

Periodically check the connection unions for leaks. Hoses that are cracked, swollen, or hardened due to dry sleeves should be replaced.

Fitting the radiator

Refit any previously removed component following the procedure described in paragraph "Removing the water radiator" in reverse order.
Check that the components below have been refitted on radiator (7):

- side covers (3): screw tightening to a torque of 4Nm ± 10%;

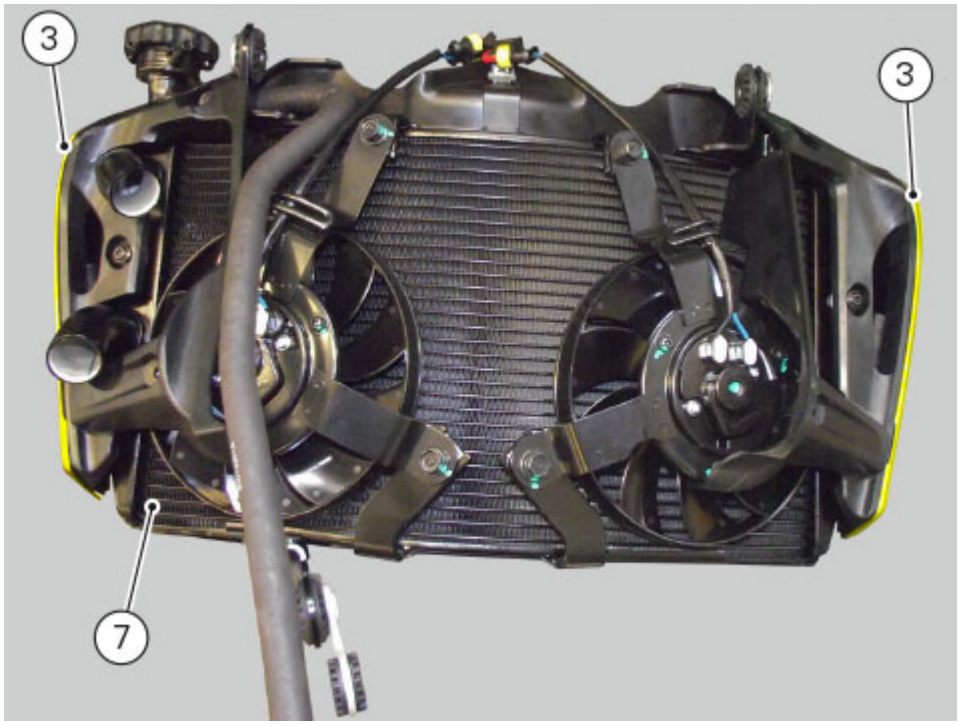

- the two electric fans (22) with screws (21);

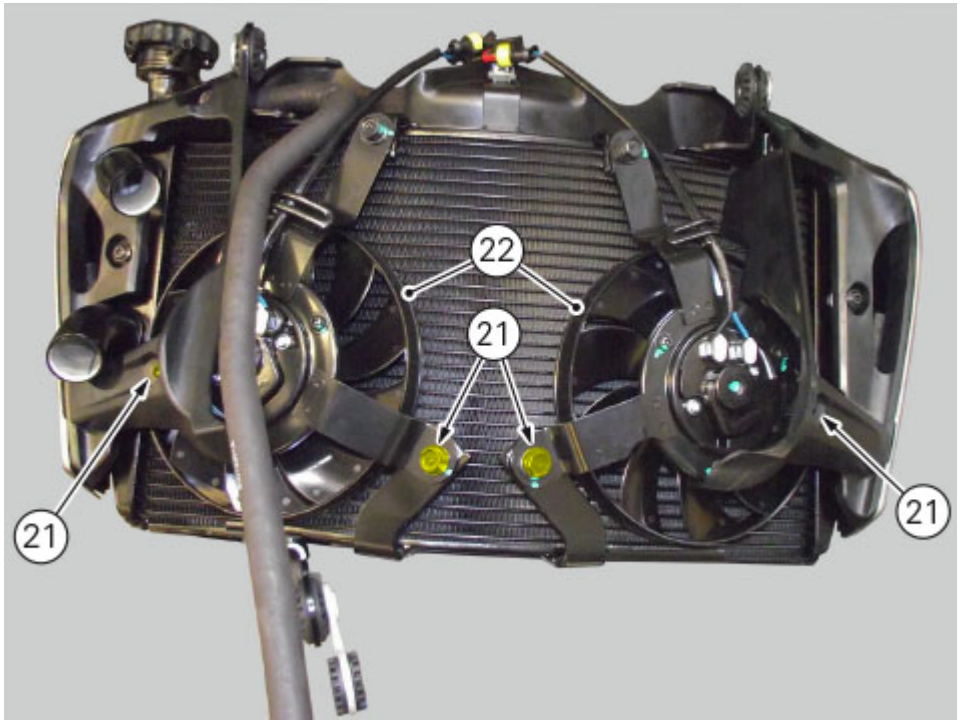

- rear RH and LH covers (2);

Screws (1A) and (1B) have pre-applied threadlocker. When fitting new screws, apply specified threadlocker on both screws (1A) and (1B).
Tighten screws (1A) and (1B) to a torque of ± 4 Nm 10%.
Tighten screw (1C) to a torque of 3 Nm ± 10%.

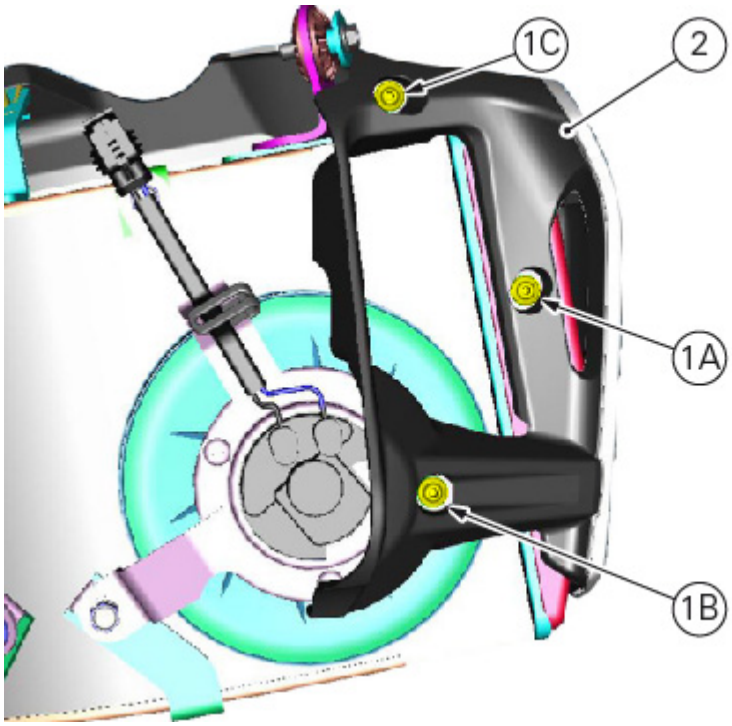

- the front cover (6): screw (16) tightening to 4 Nm ± 10%;

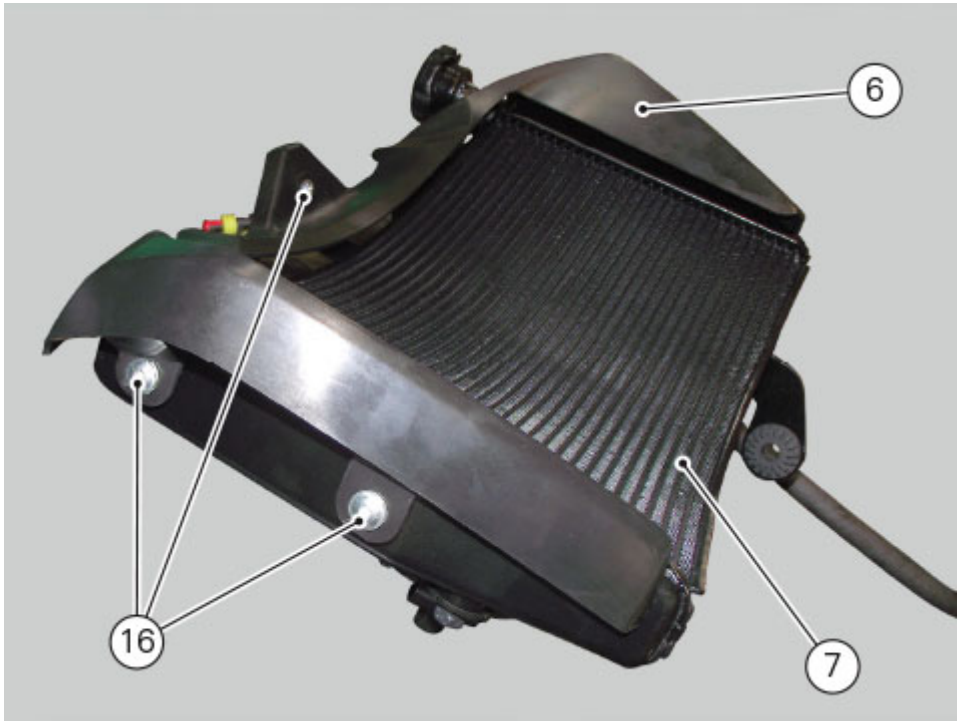

- spacers (9) and vibration damping rings (10) and (11);

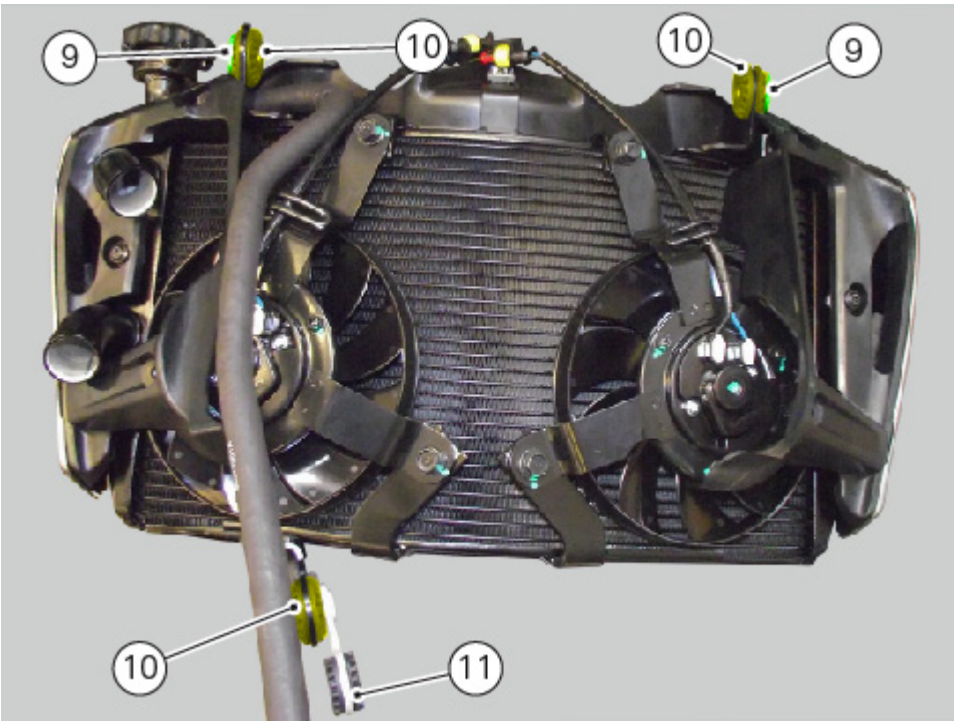

Check that the gap between front cover (6) and radiator (7) is the same along the whole upper arch.



- vibration damper (11) on bracket (12).

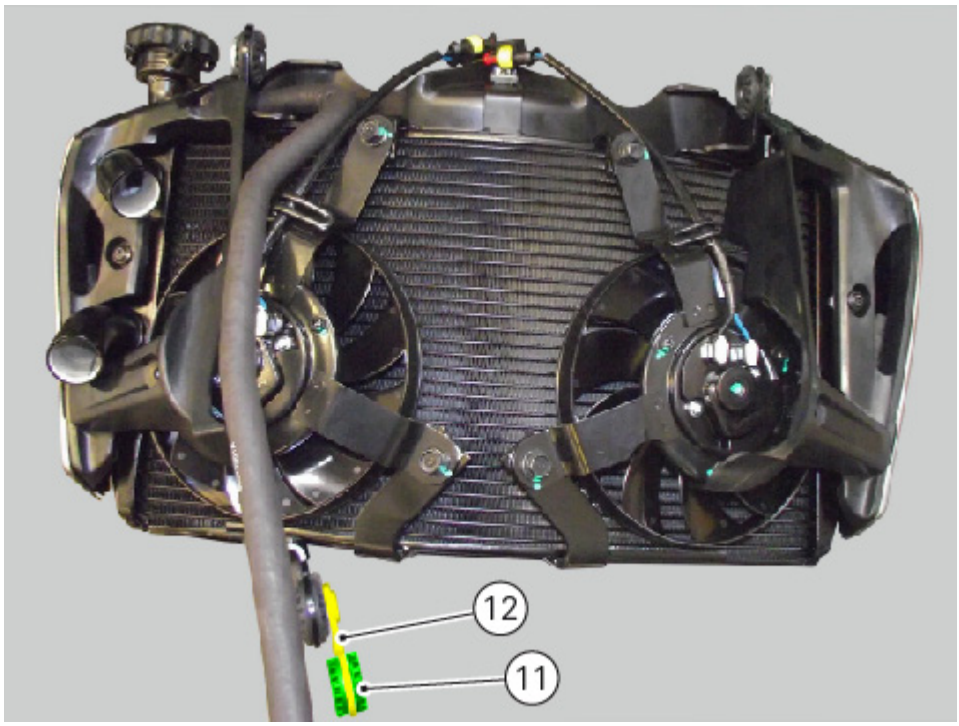

Insert the radiator support inside pin (15).
Lubricate pin (15) with specified product.

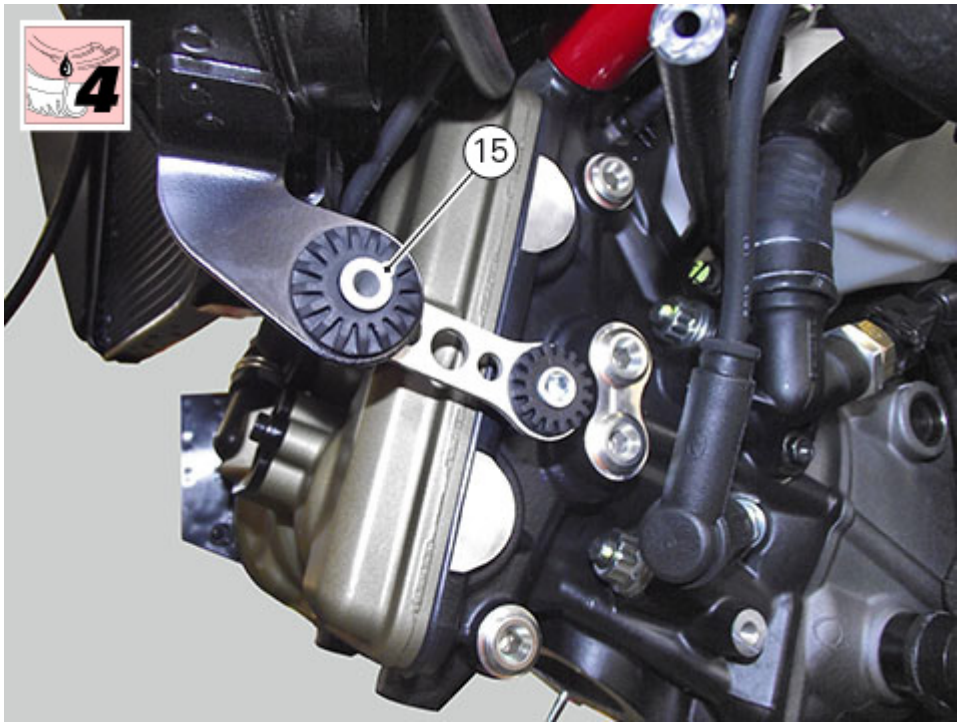

If, on the contrary, radiator is removed together with bracket (12), position it inside its seat and tighten screw (17) to a torque of 5 Nm ±10% inside threaded pin.

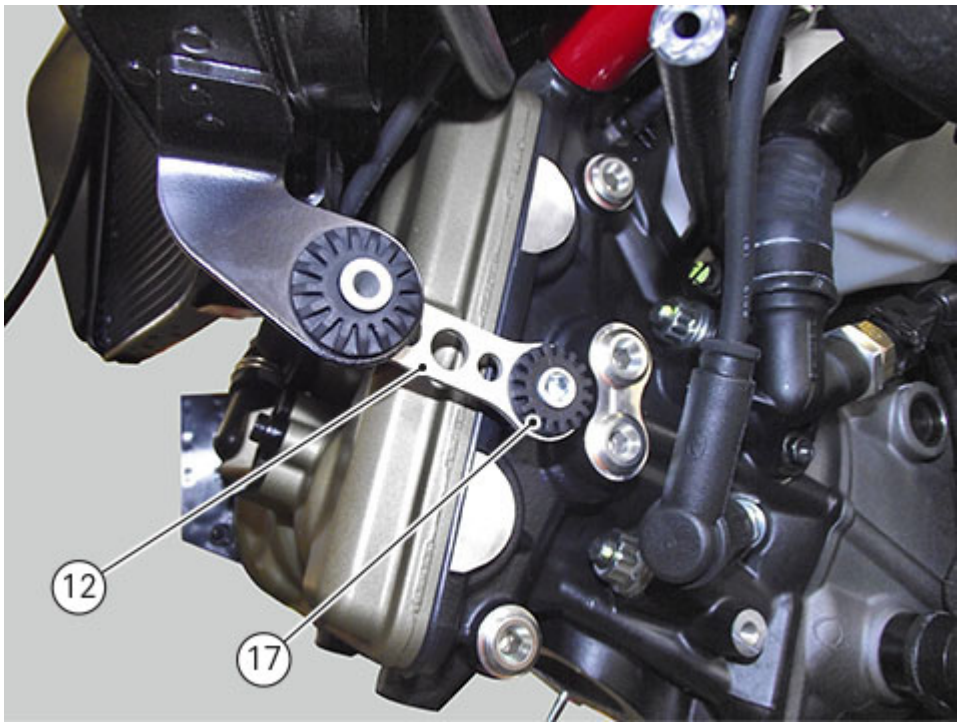

Start screws (13) with spacer (14) on the left and right sides.
Tighten the screws (13) to a torque of 10 Nm ± 10%.

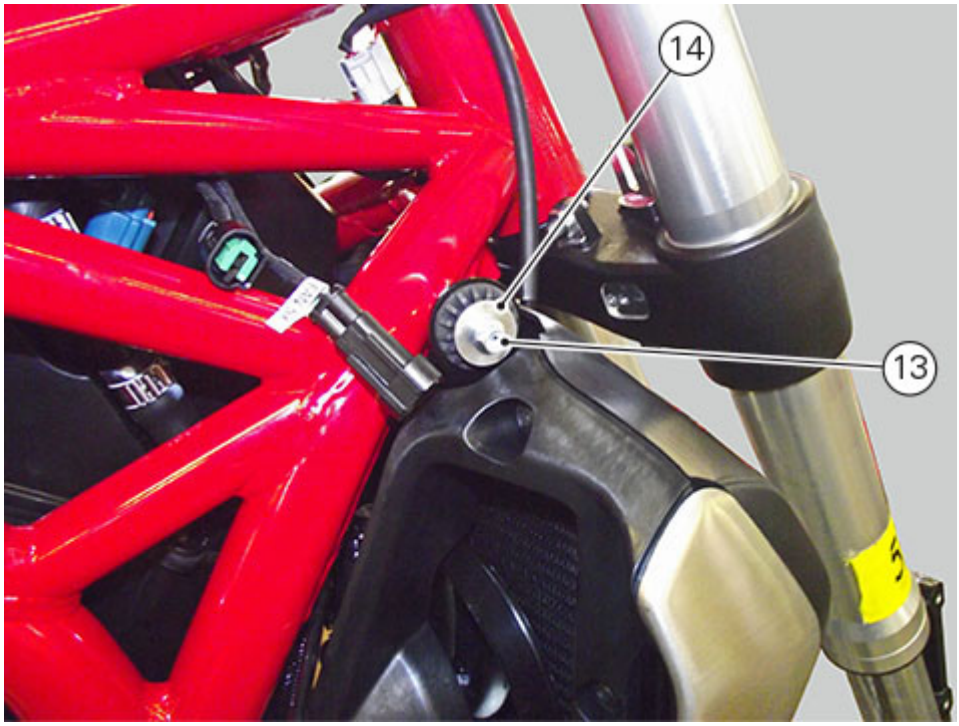

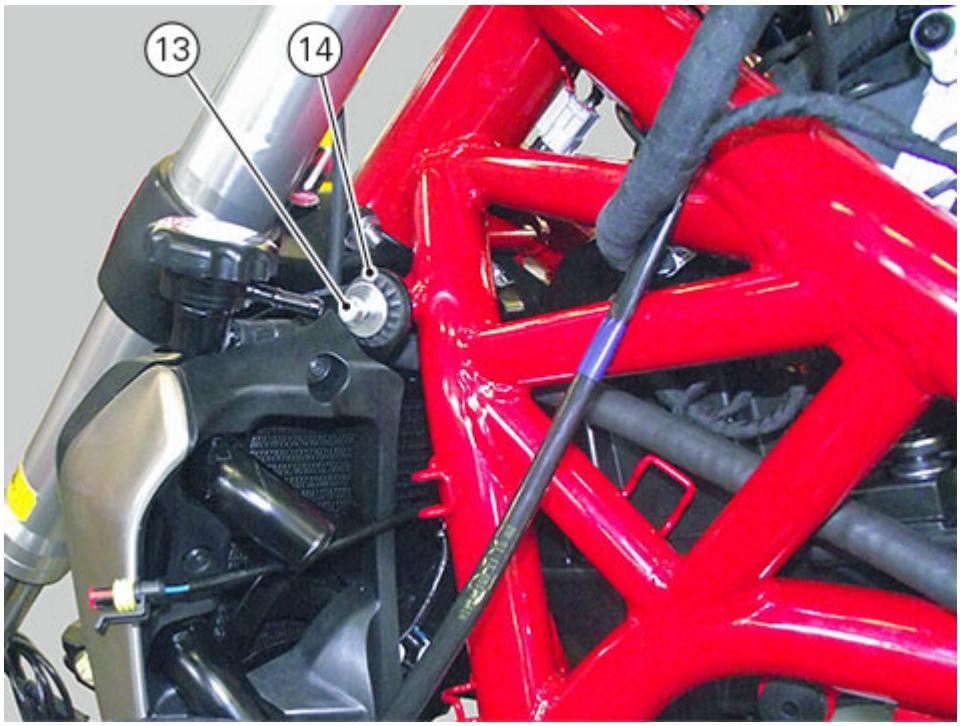

Connect the electric fan RH (12) and LH (11) connector to the main wiring.

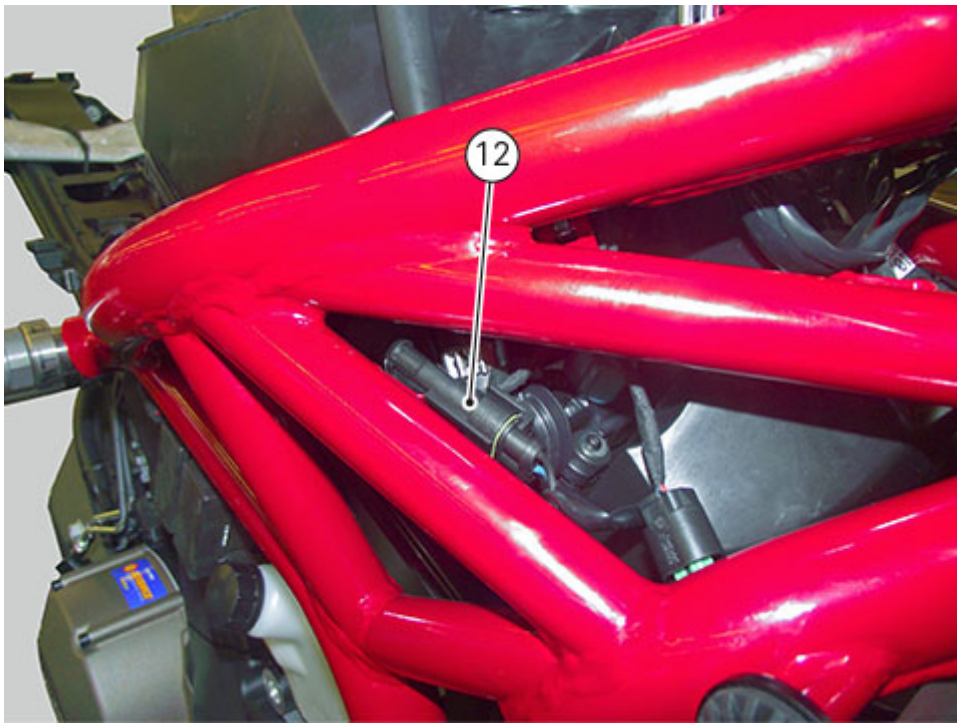

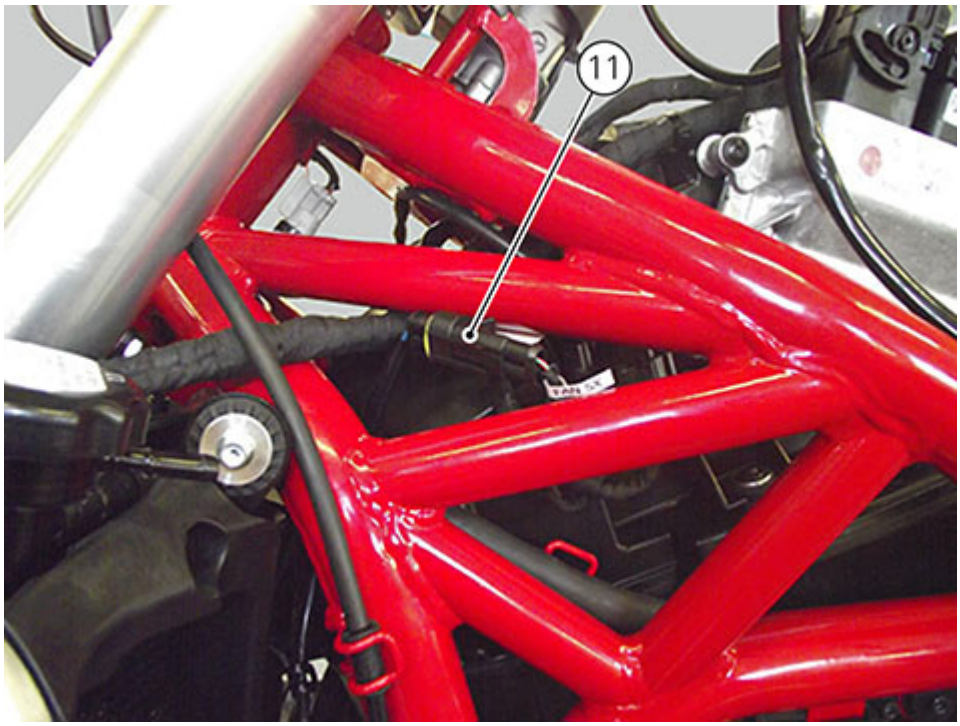

Connect the breather pipe (10) and fix it with ties (8) and (9).

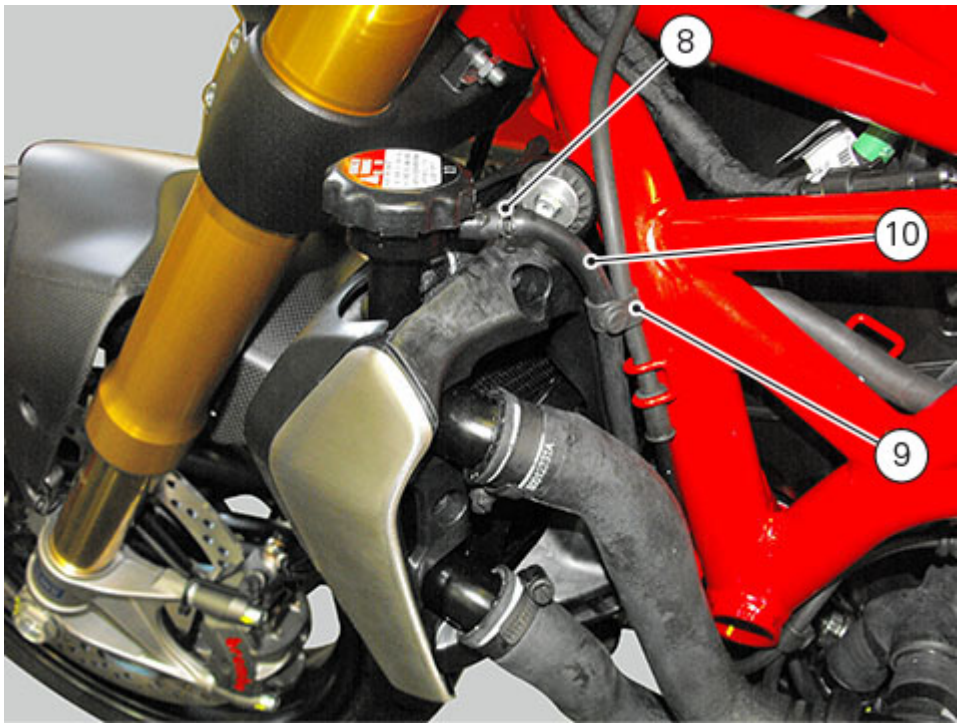

Insert the cooling system pipes (6) and (5) in the relevant unions on the radiator and tighten clamps (4) to a torque of 2.5 Nm ± 10%.

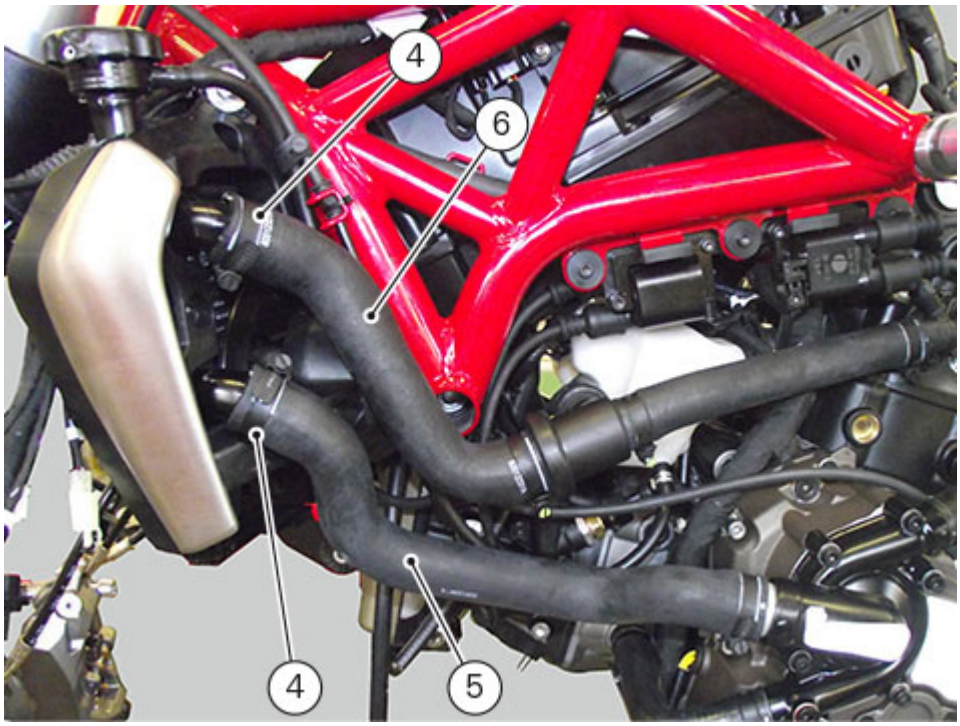

Tighten plug (3) to a torque of 15 Nm (Min. 13.5 Nm - Max. 16.5 Nm).

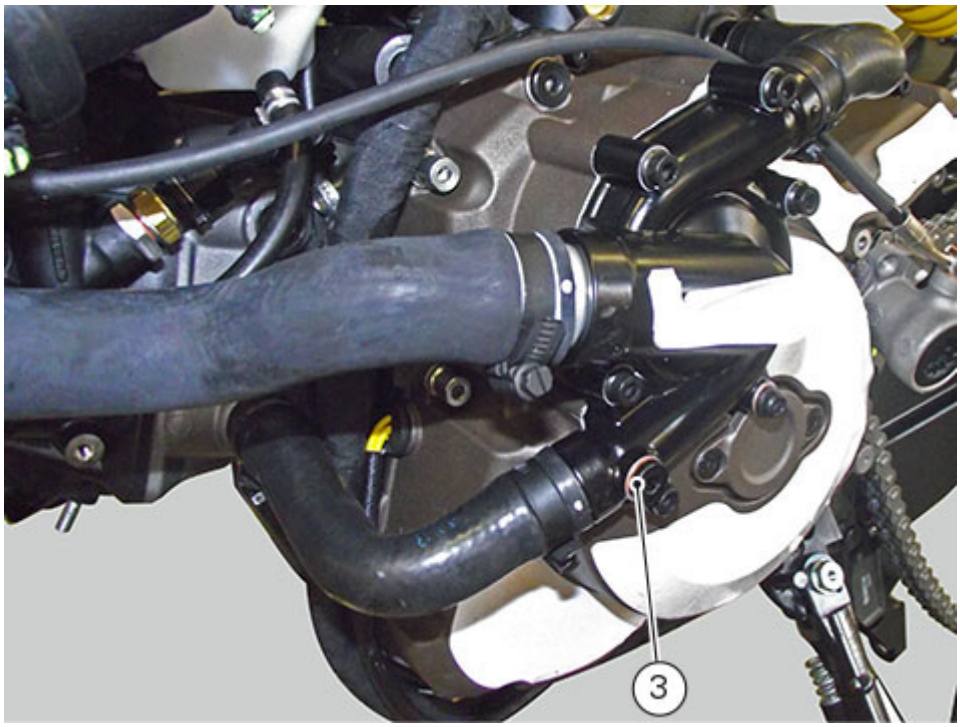

Position cover (2), fill and drain the cooling system and screw radiator plug (1) (Changing the coolant).

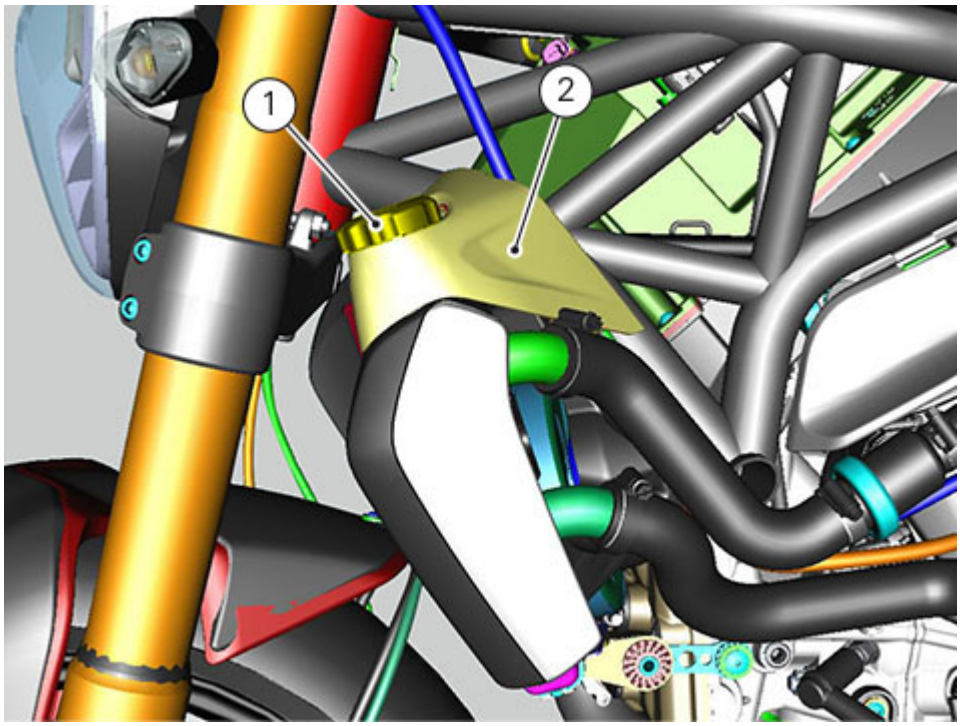
1
2

Replacing the electric fan

Remove the radiator cover (Removing the water radiator).
Loosen the three screws (1) retaining the electric fans (2) and (3) from the radiator and note the screw position.
Upon refitting, tighten the screws (1) after inserting them in their original positions.
Apply threadlocker on the two upper screws (1).
Refit the radiator covers (Refitting the water radiator)

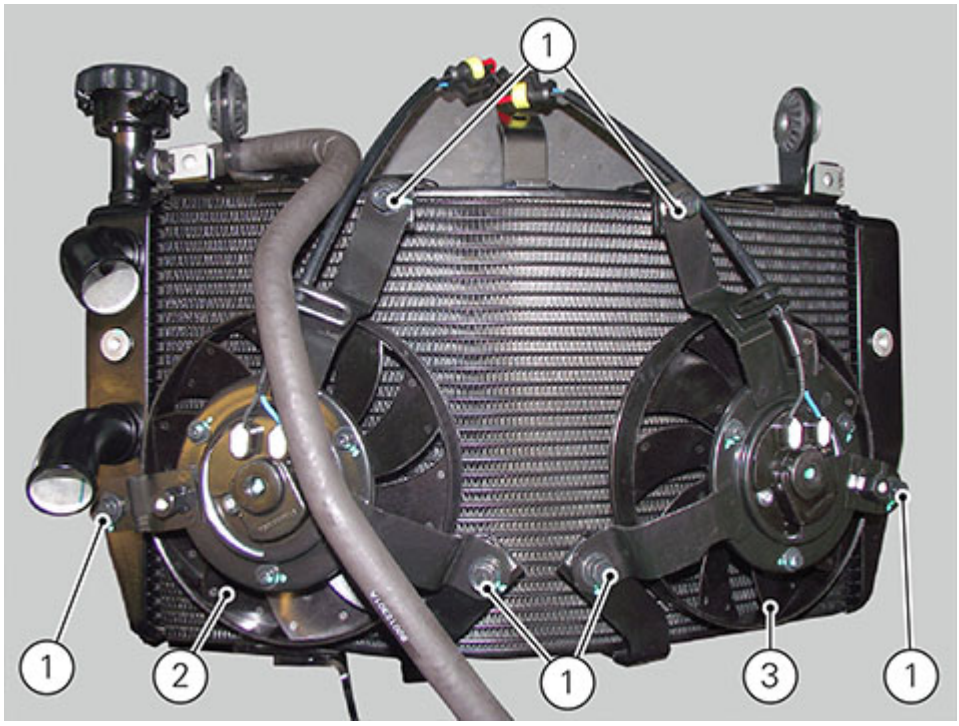

Removing the radiator

After removing plug (1), slide out cover (2).

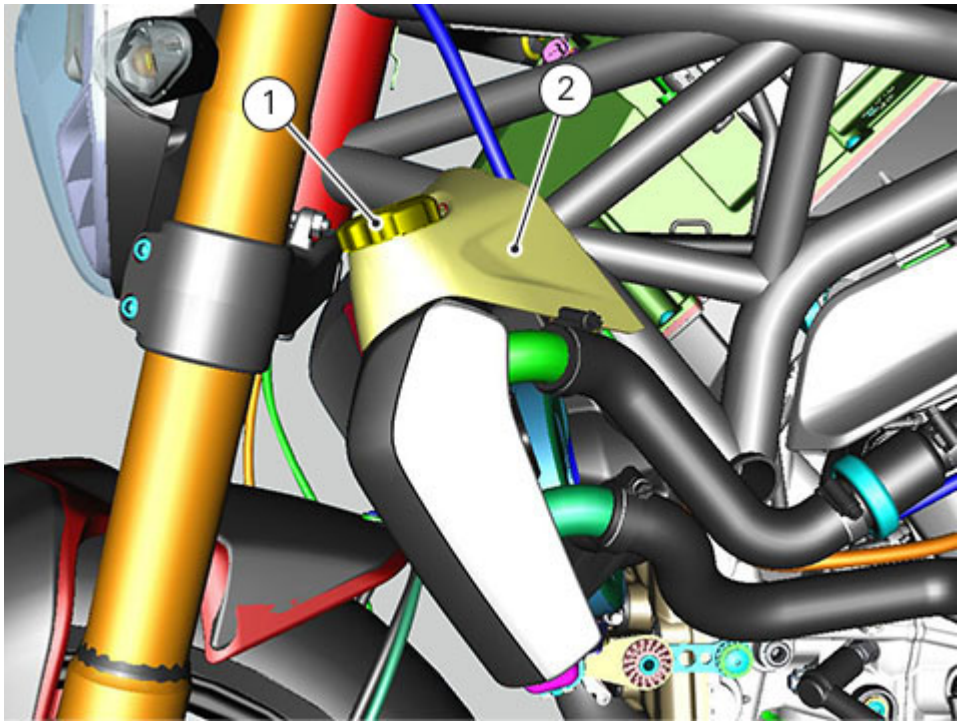

Loosen plug (3) and drain the coolant in a suitable container.

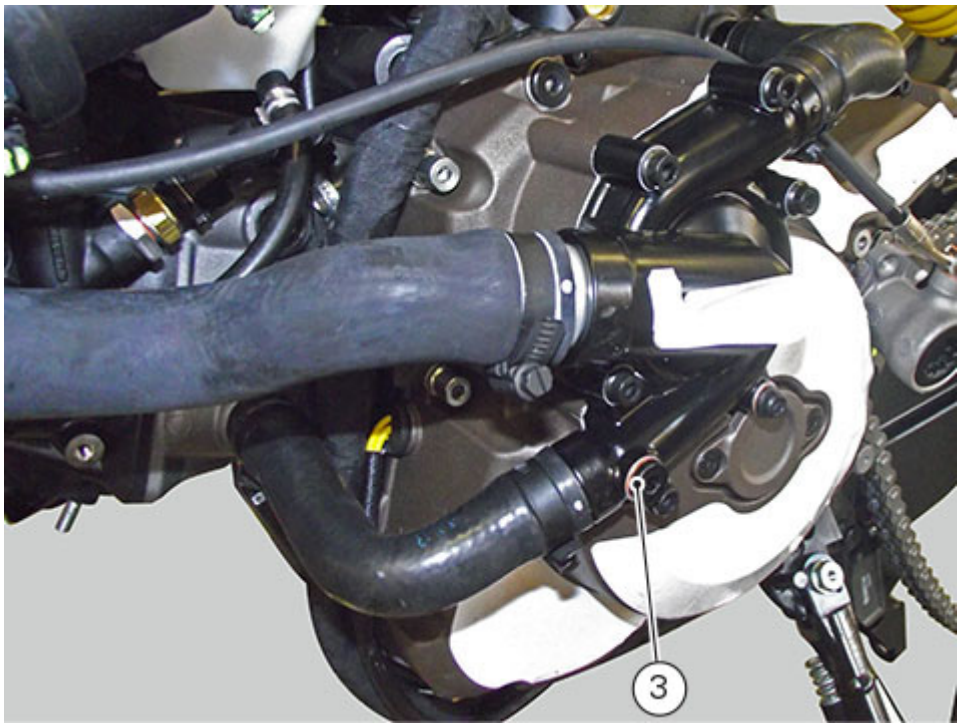

Loosen clamps (4) of water pipes (5) and (6) and slide them out of the radiator unions.

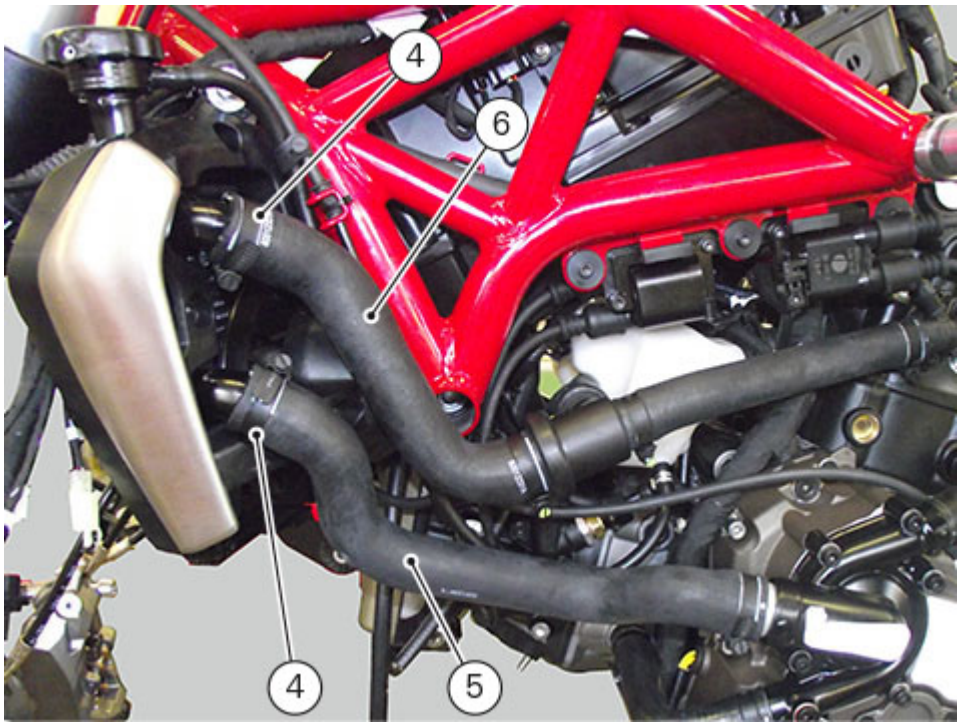

Slide clamp (8) out and remove tie (9).
Disconnect the breather hose (10).

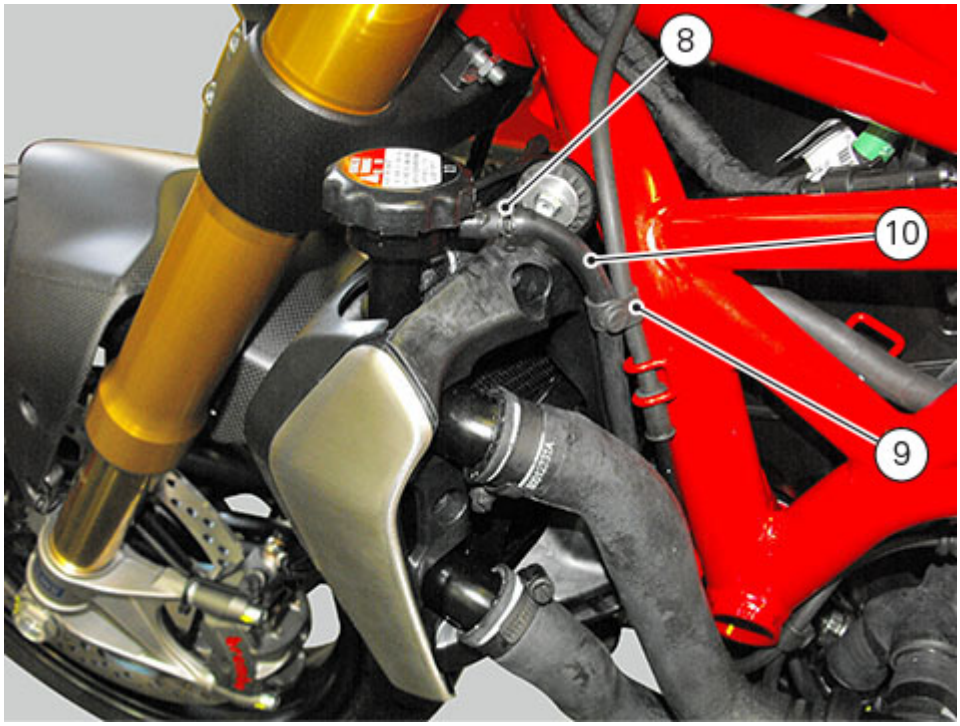

Disconnect the LH (11) and RH (12) connections of both electric fan main wiring.

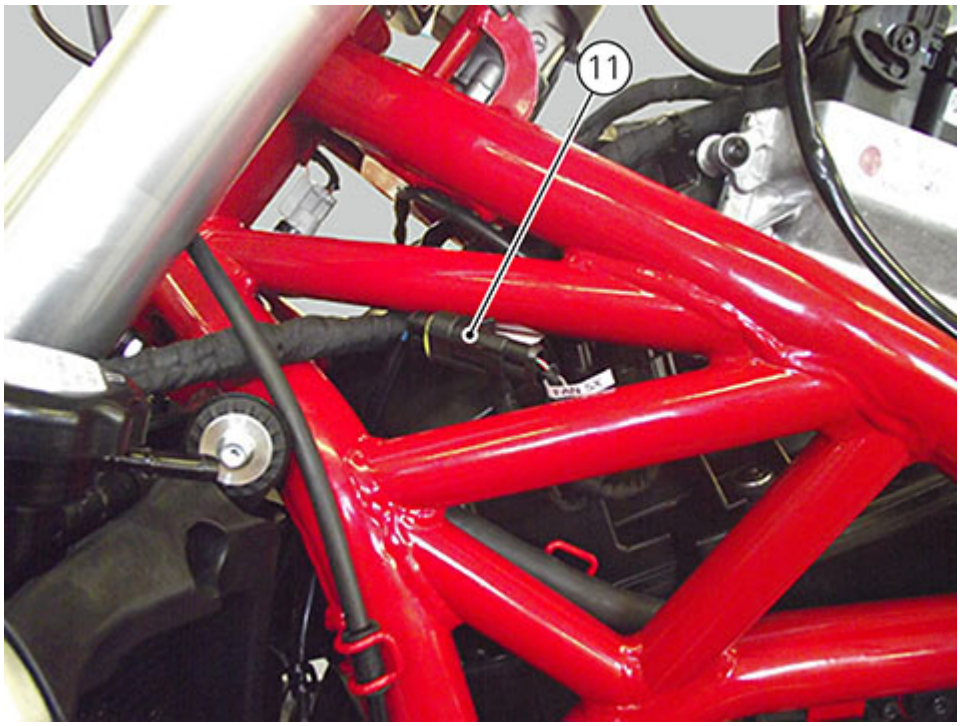

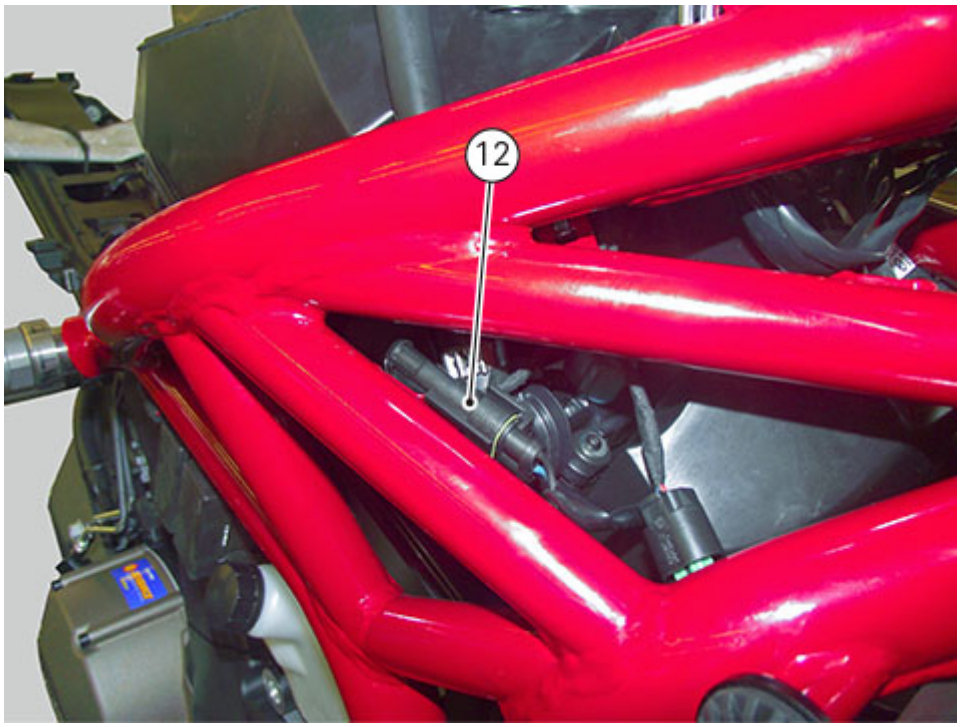

Working on both sides, loosen screws (13), and collect spacers (14).

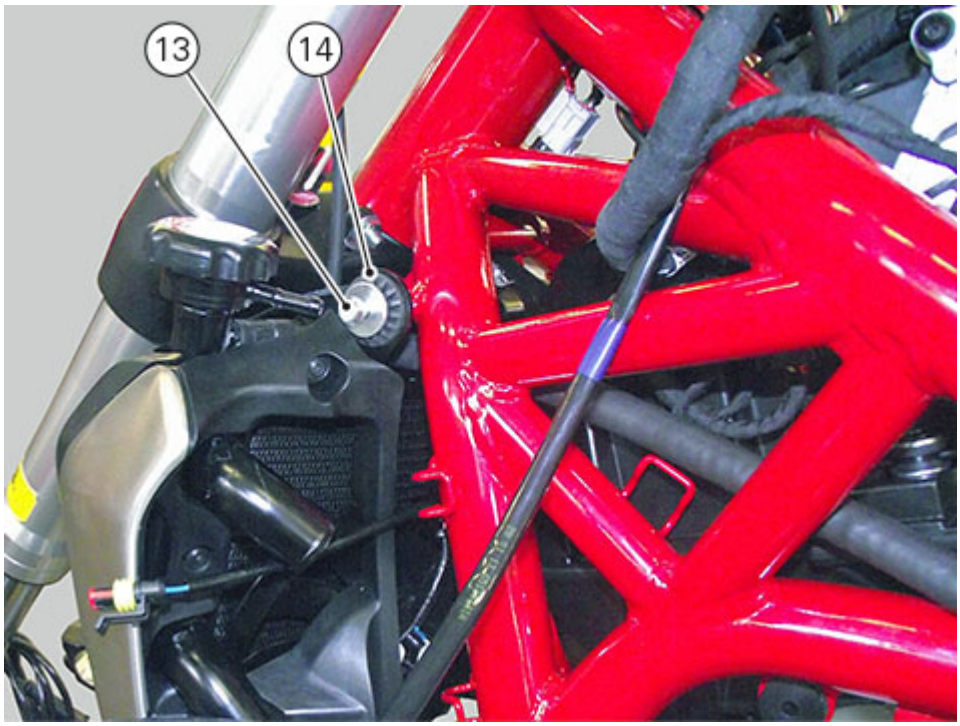

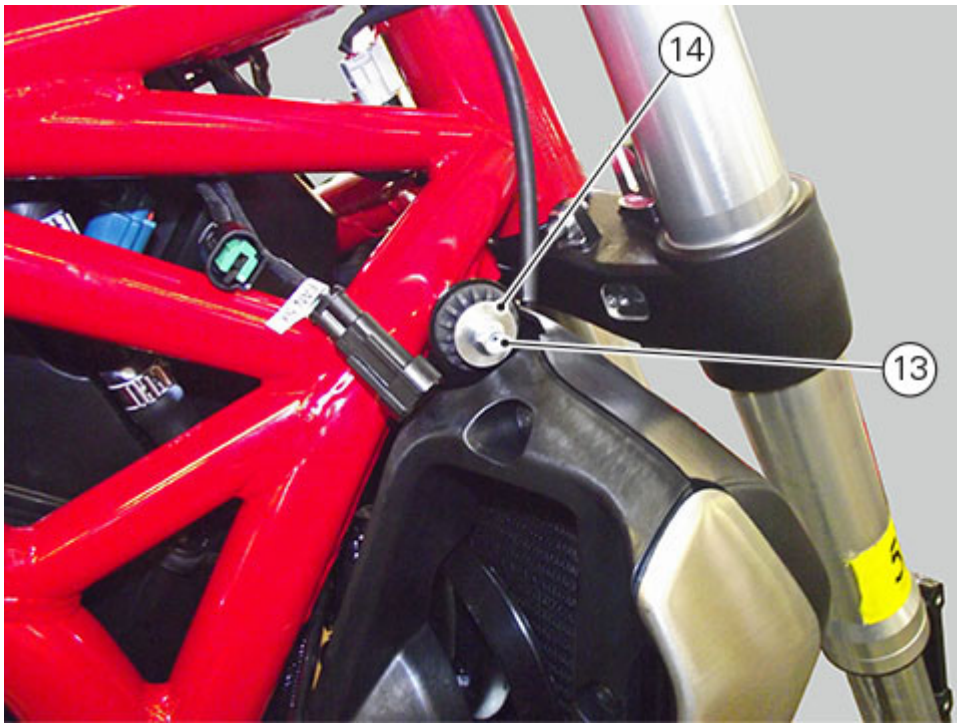

Remove water radiator (7) from the vehicle by disengaging it from pin (15).

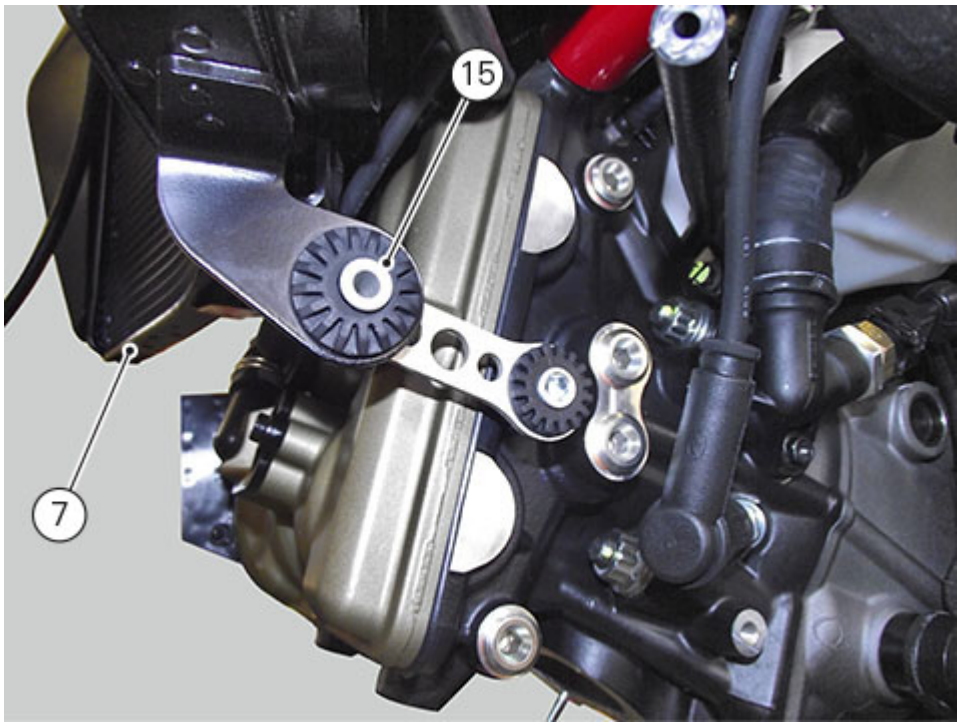

As an alternative, you can remove radiator (7) by loosening bracket (12) retaining screw (17).

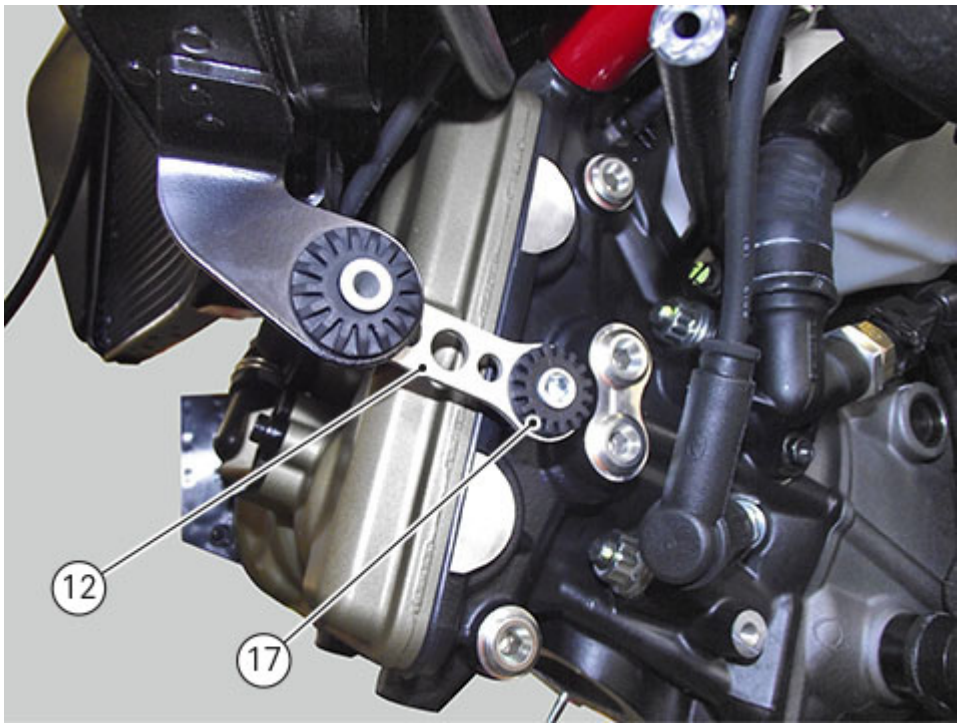

Inspecting the water radiator

Visually inspect the cooler. Replace it at any sign of damage or leaks. Check also that the air flow through the radiator fins are not obstructed by leaves, insects, mud, etc.

Important

Excessive coolant temperature can be caused by a partial obstruction of the radiator fins.

Carefully check the condition of the radiator fins.

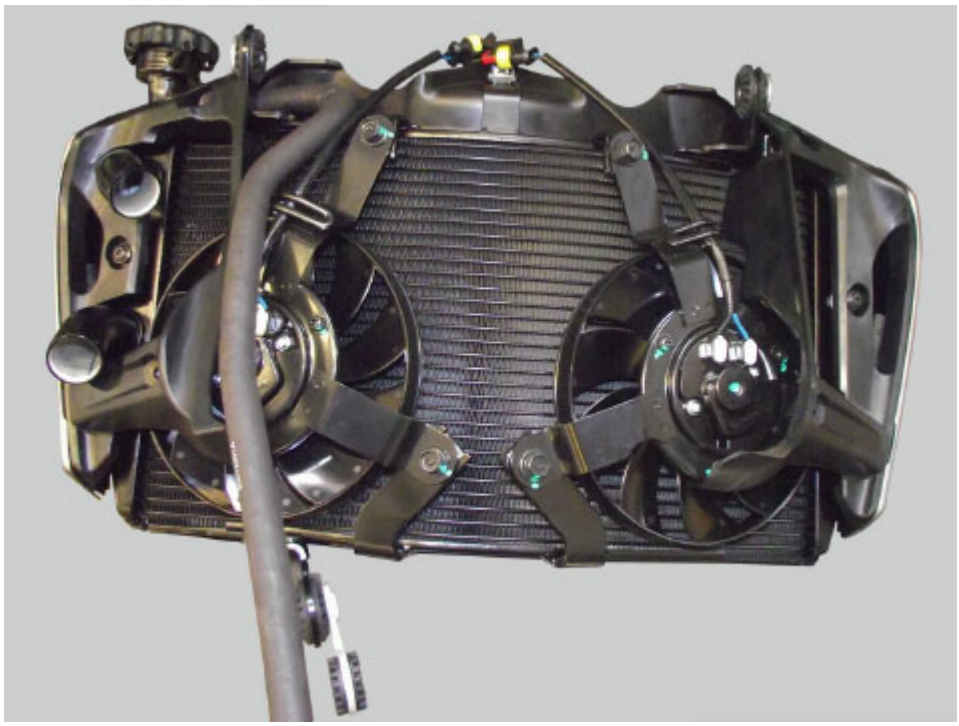

If necessary, disassemble the radiator as described below.
Following the same procedure on both sides, loosen the three screws (1) and remove the rear (2) and side (3) covers.

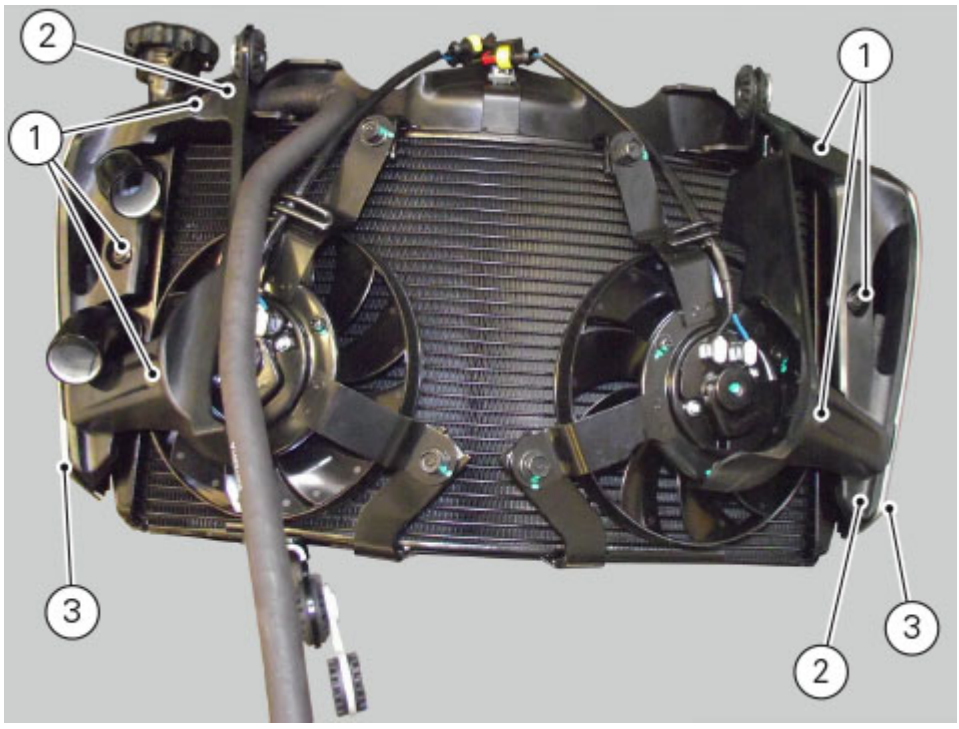

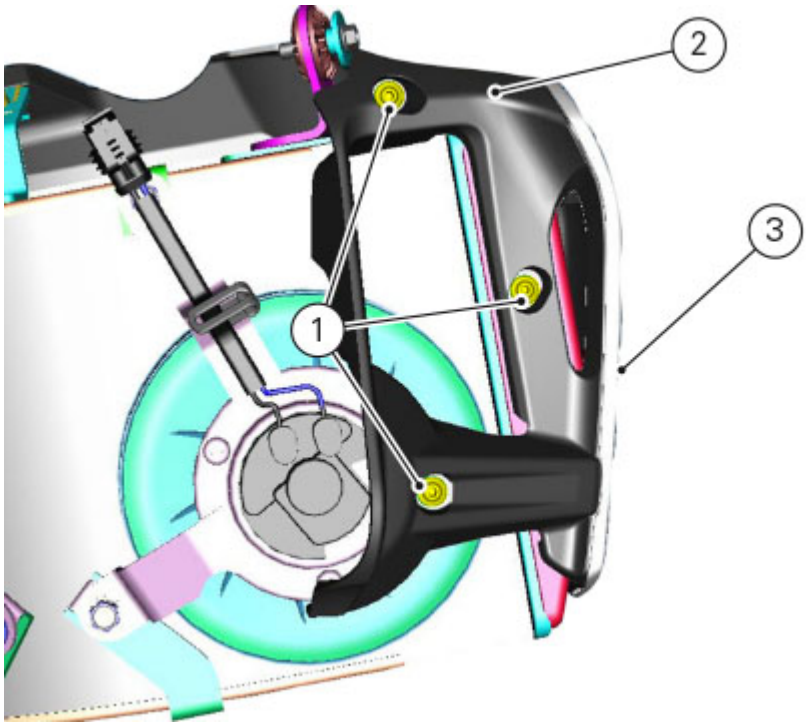

To disassemble the side covers (3), loosen the two screws (4) and slide the external cover (5) out having care not to damage tab (A) and slots (B).

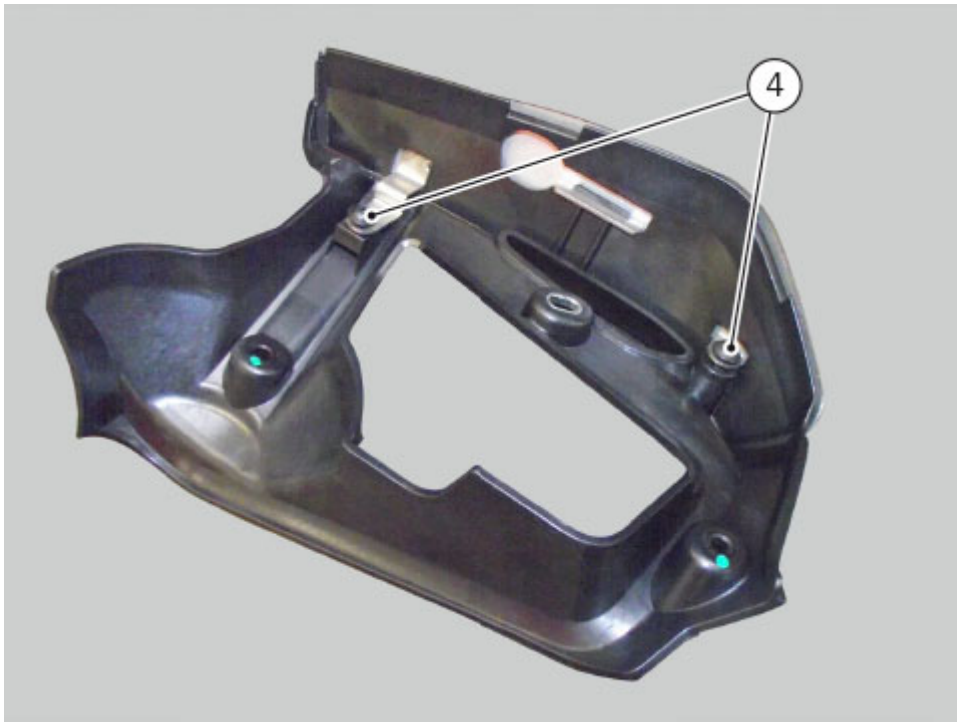

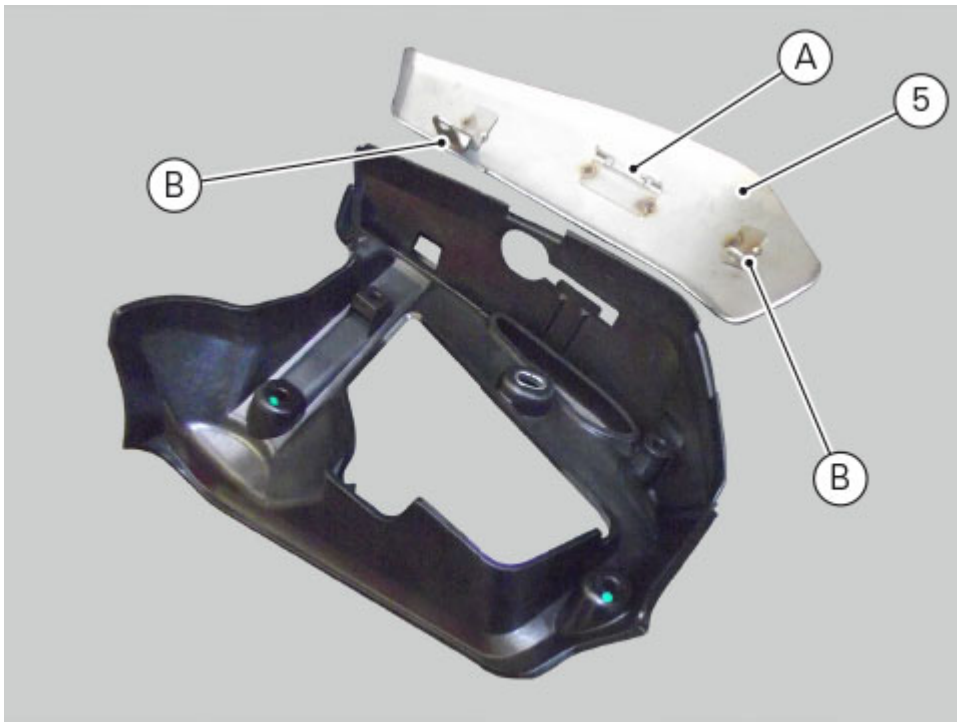

To remove the front cover (6), loosen screws (16) on both sides of radiator (7).

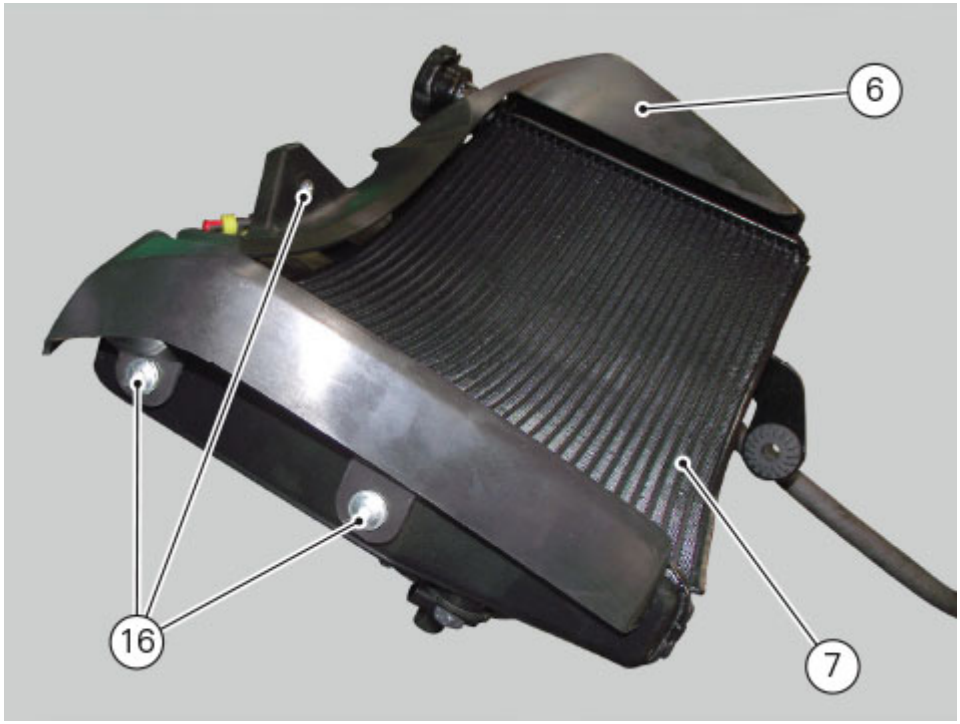

If necessary, remove spacers (9) and vibration damping pads (10) and (11).
Slide off bracket (12).

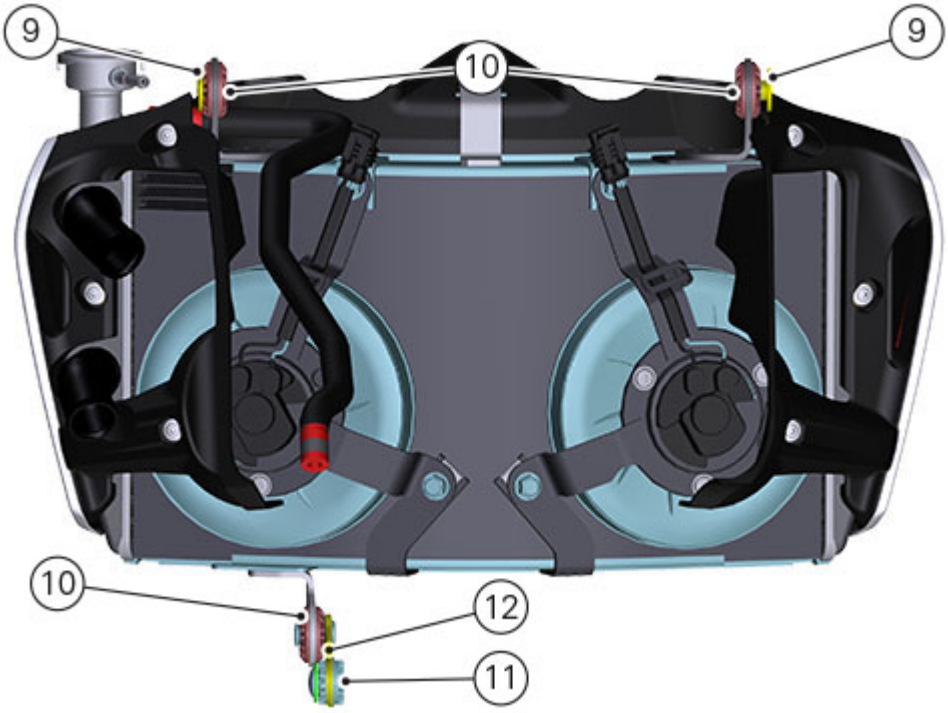
9
10
9
10
12
11

Refitting the water pump

Clean the seat in the cover, any parts you intend to reuse, and the impeller shaft. Lubricate with engine oil and refit as follows.
Lubricate the seal with the specified product.
Use drift (C) no. **88713.0869** to fit the new mechanic seal (9) on the impeller shaft.



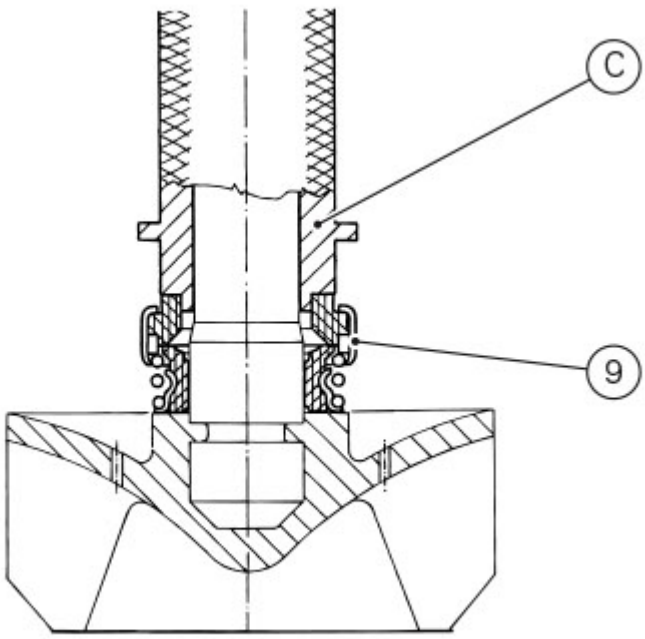



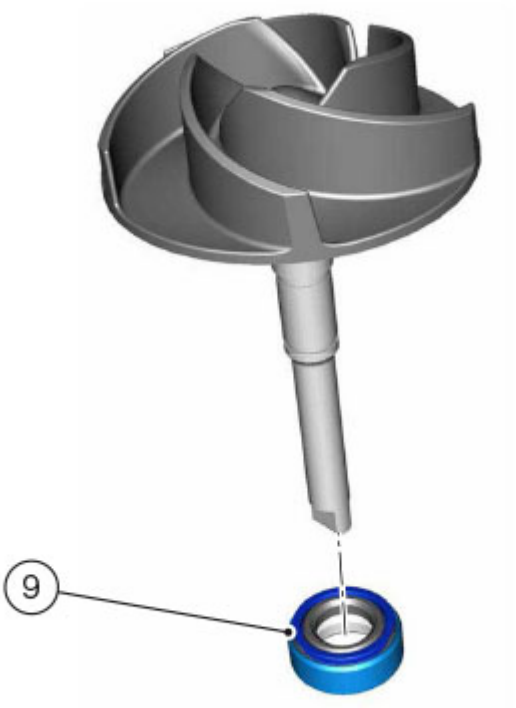

Working on cover internal side, insert the inner spacer (15) with the sharp edge (D) outwards. Using a suitable drift working on the outer ring, drive bearing (13) - with the shielded side (E) facing the cover - fully home on the spacer (15).

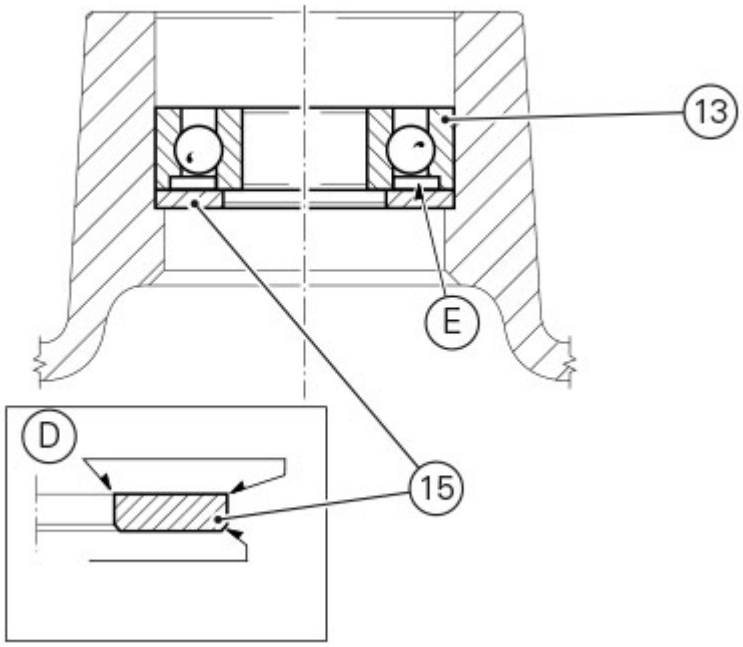

Fit the other bearing (12), driving it fully home on bearing (13).

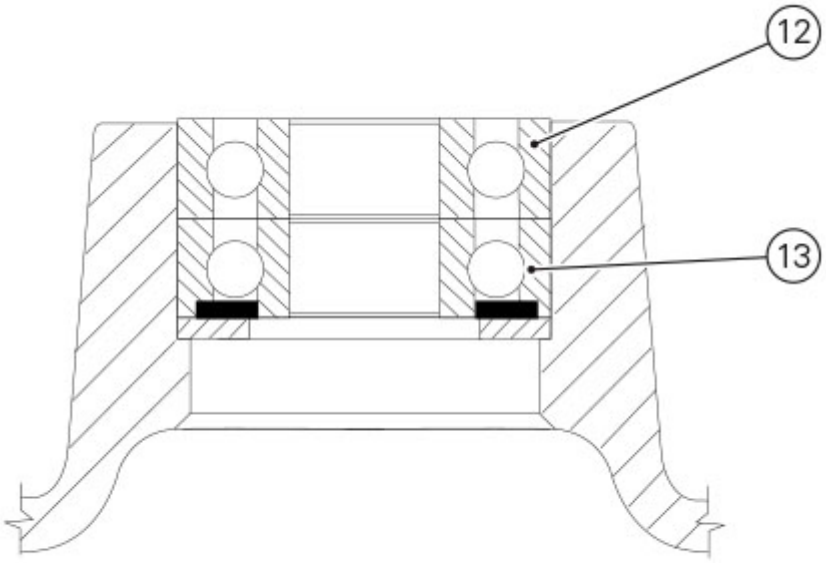

Apply the recommended threadlocker on the screws (10).
Fit the two screws (10) with the washers (11), and tighten to a torque of 10 Nm (Min. 9 Nm - Max. 11 Nm).

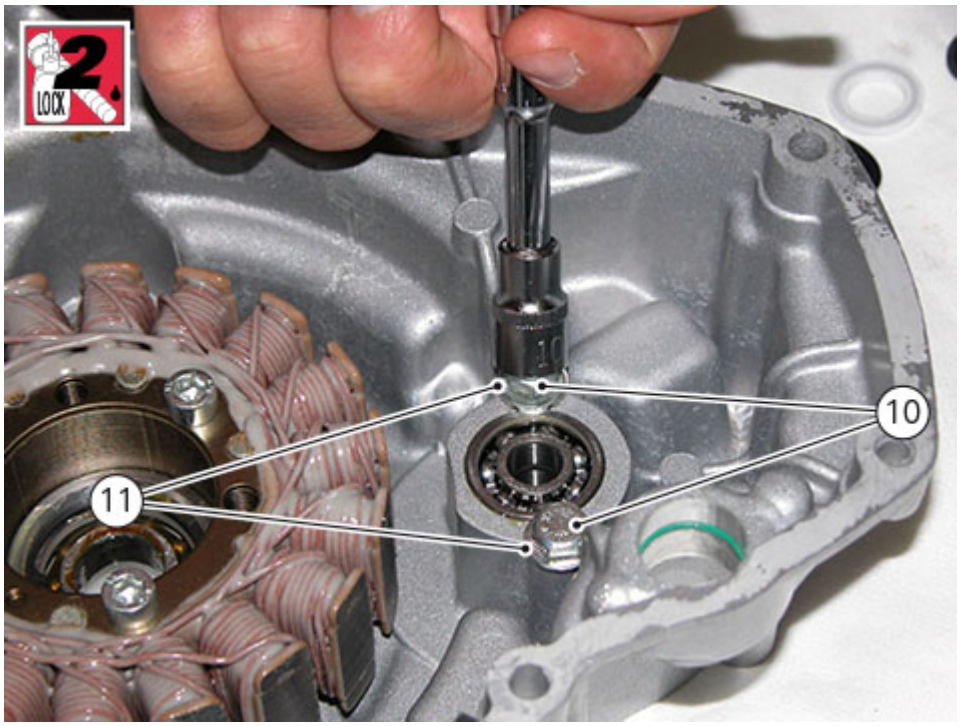

Turn the cover upside down and use drift (F) no. **88713.0870** to install counter-washer (14) fully home on spacer (15).
Counter-washer (14) must be positioned so that the white side is facing upwards.
Clean counter-washer (14) with the specified product.

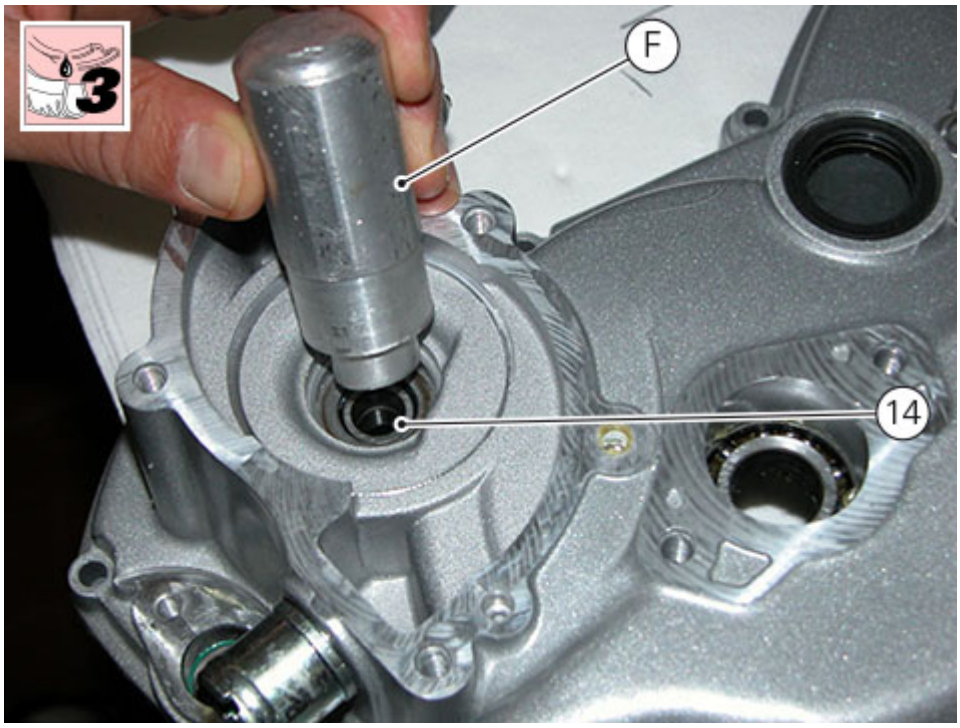

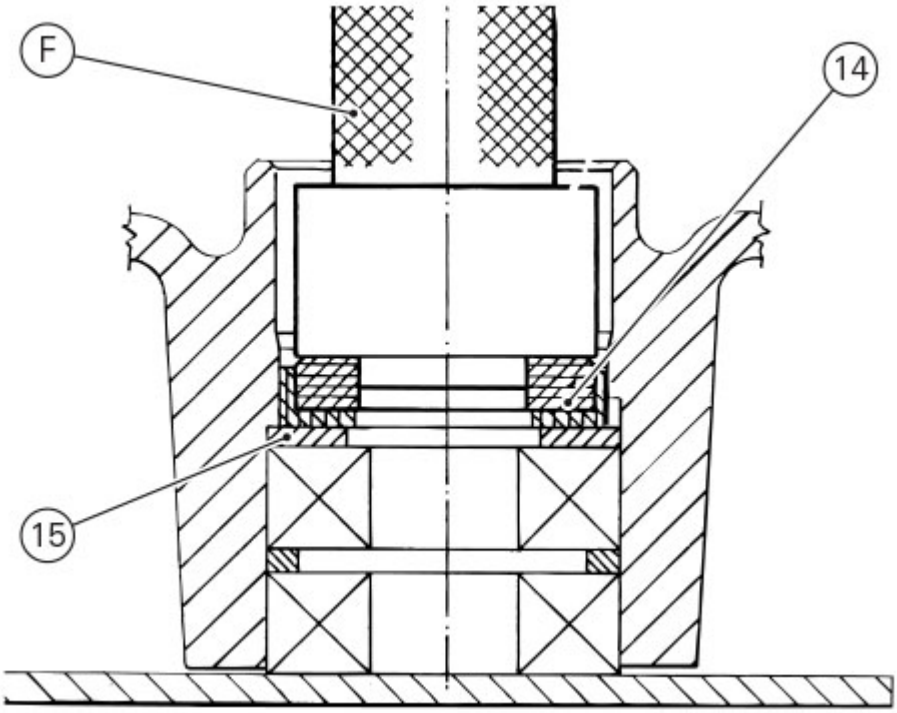

Fit the impeller shaft (6) with the previously installed mechanical seal (9).

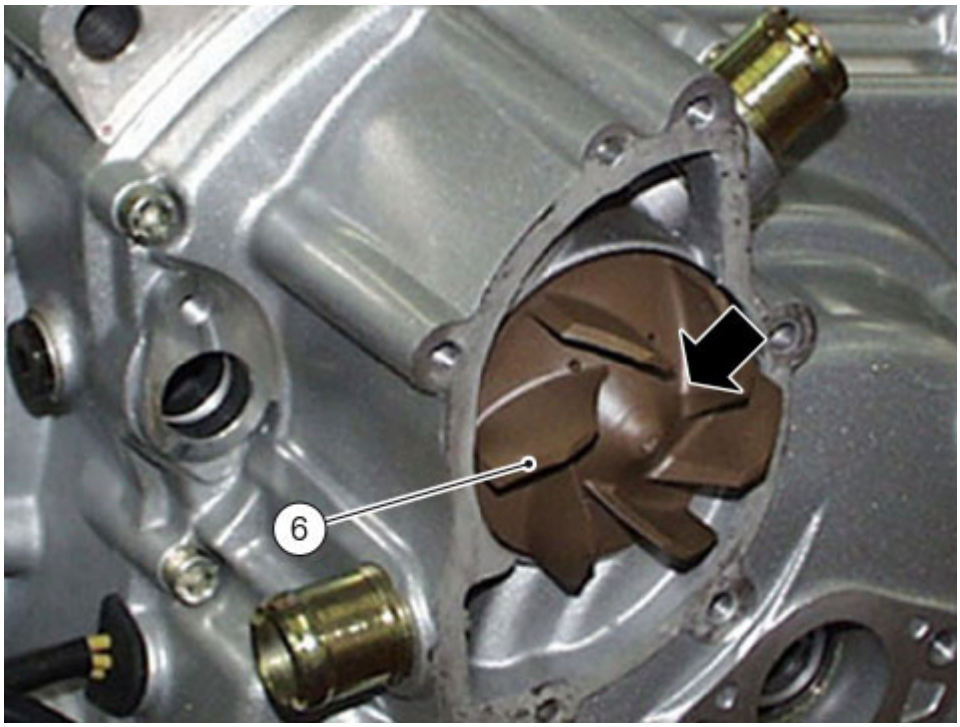

Insert the spacer (8), aimed as shown in the figure, and lock in place with the snap ring (7).
Turn the impeller (6) and make sure that it can rotate freely, without excessive resistance.
Clean the mating surface thoroughly on the pump cover and on the generator cover.

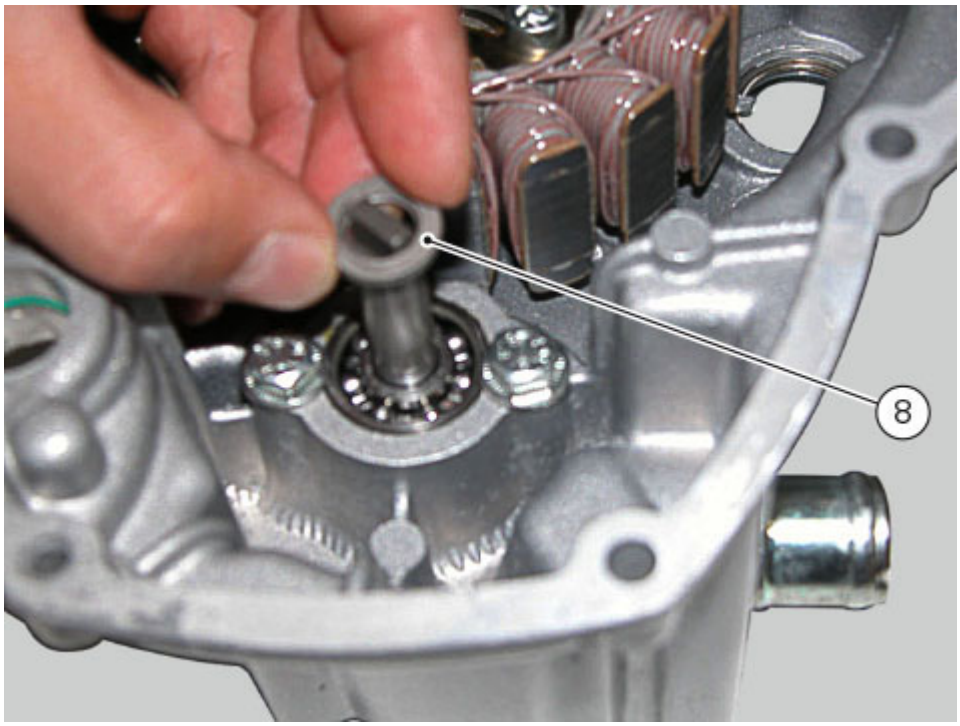
8

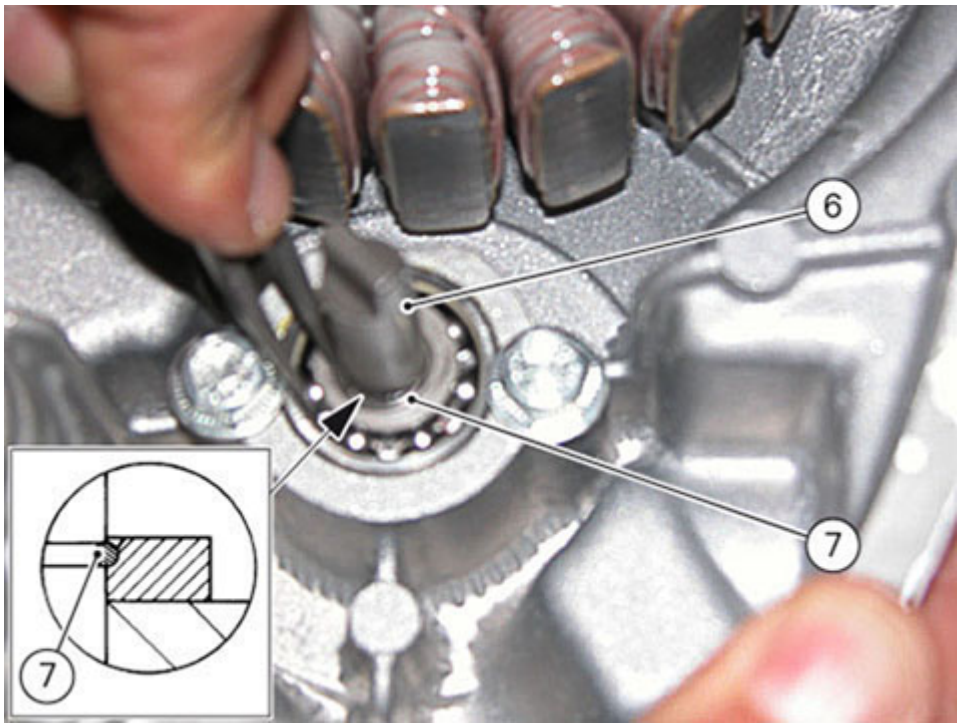
6
7
7

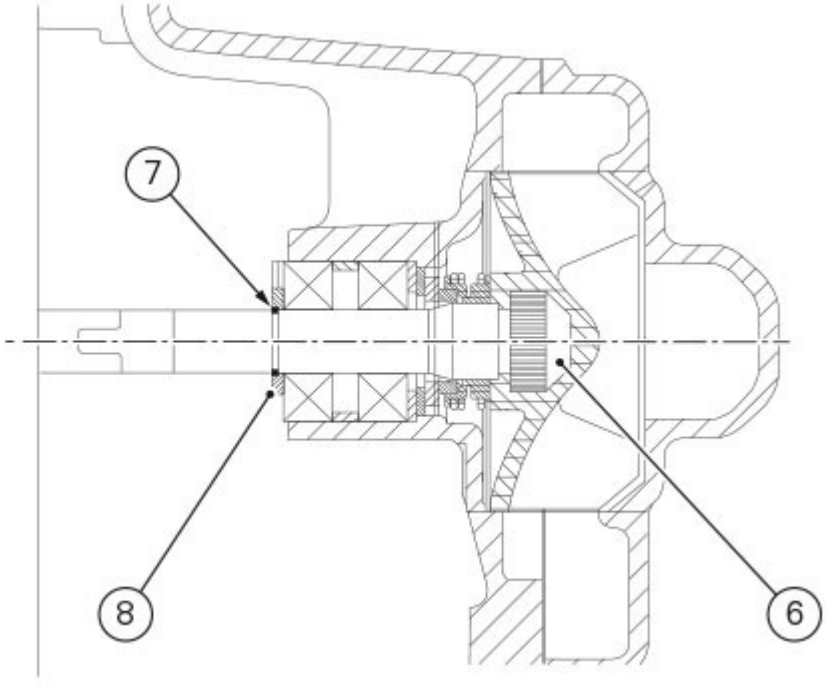

Install seal ring (16) in the suitable groove (G) on the impeller shaft.

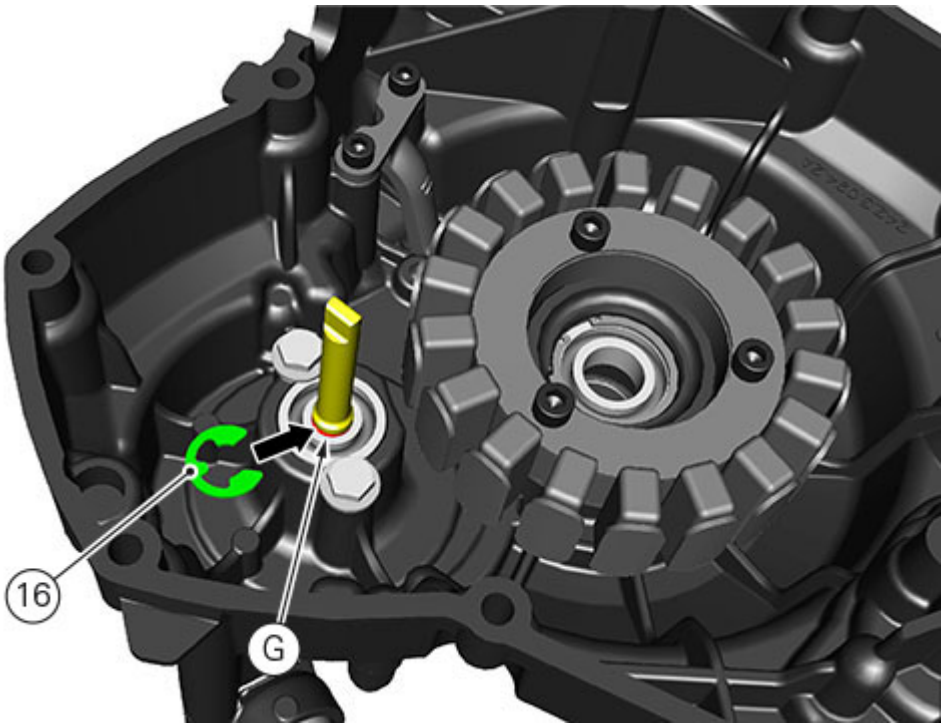

Apply a bead of sealing compound on the perimeter of water pump cover on casing as shown in the figure.
Fit bushes (5) and position the cover (3) on the generator cover.

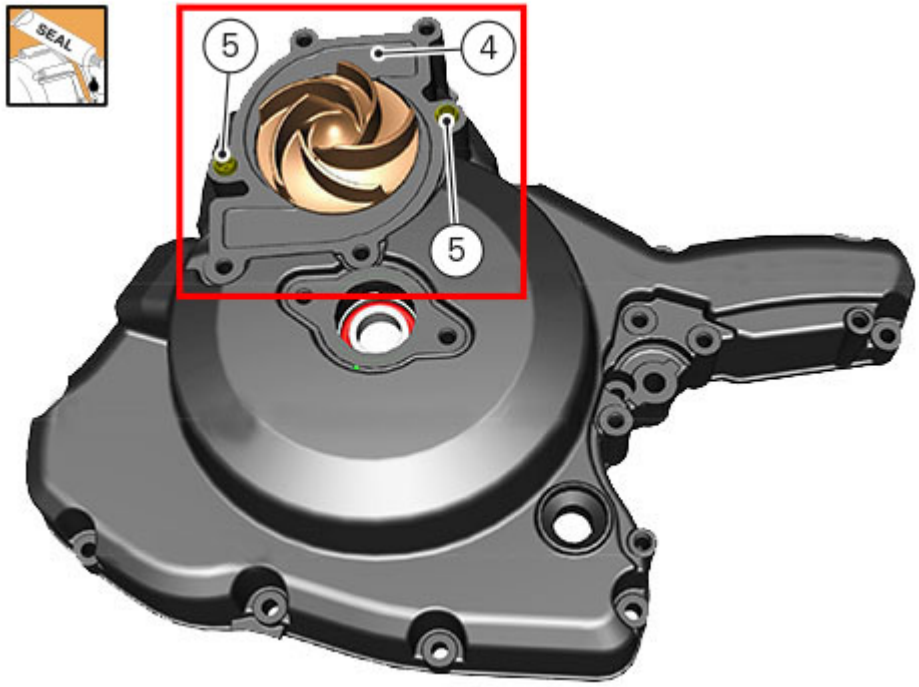

Start screws (1).
Insert the screws (2) and (3) with their relevant washers.
Tighten the screws (1), (2) and (3) to a torque of 10 Nm (Min. 9 Nm - Max. 11 Nm).
Respect the sequence shown in the figure.
After tightening, remove any excess of threadlocker.

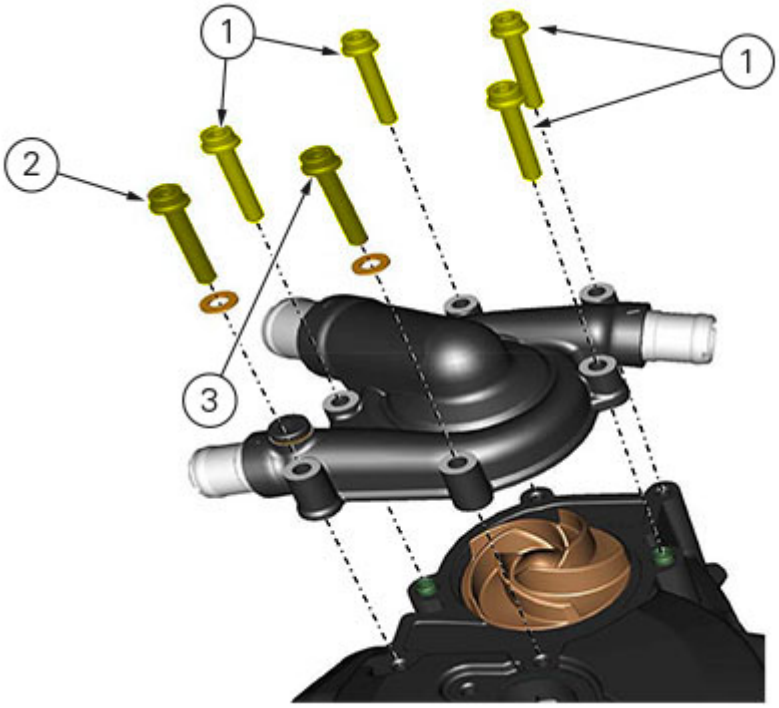

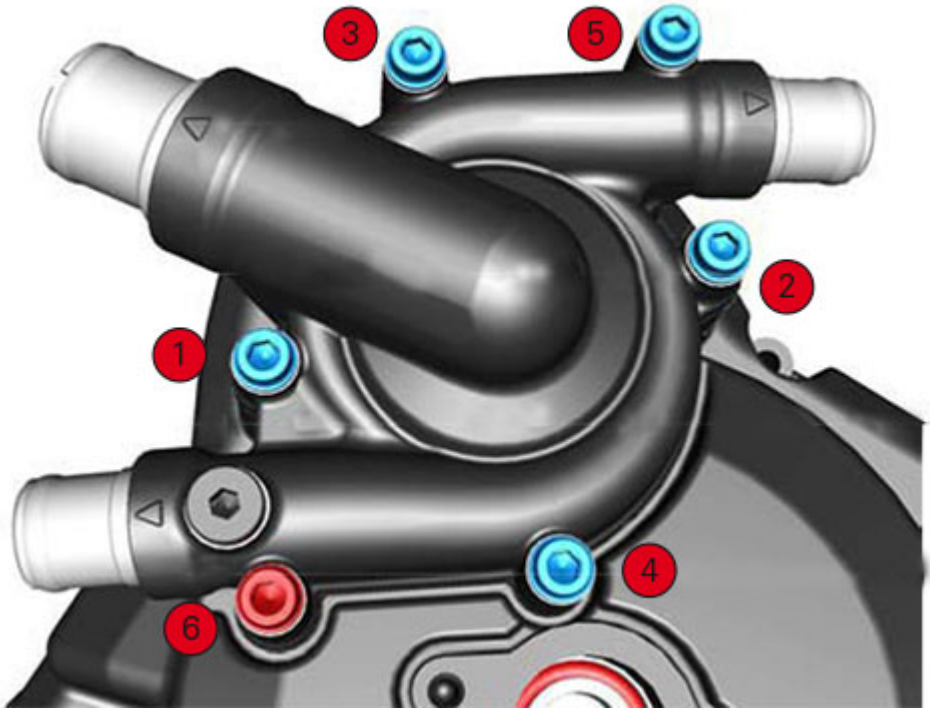

Fit the generator cover (Fitting the generator cover).
Refit the pump-cylinder hoses (Refitting the cylinder/piston assembly).
Refit the clutch slave cylinder (Refitting the clutch slave cylinder).
Fill the system with engine oil (Changing the engine oil and filter cartridge).
Refit the gear shift (Refitting the gear shift).
Refit the front sprocket cover (Refitting the front sprocket cover).
Fit the cooling system hoses on the water pump cover (Refitting cooling system hoses and unions).
Fill the cooling system (Changing the coolant).
Fit the lateral covers (Refitting the water tank).

Removing the water pump

Drain the coolant (Changing the coolant).
Remove the cooling system hoses from the water pump cover (Removing cooling system hoses and unions).
Remove the front sprocket cover (Removing the front sprocket cover).
Remove the gear shift (Removing the gear shift).
Drain the engine oil (Changing the engine oil and filter cartridge).
Remove the clutch slave cylinder (Removing the clutch slave cylinder).
Remove the pump-cylinder hoses (Removing the cylinder/piston assembly).
Remove the generator cover (Removing the generator cover).

Note
For clarity, the figures show the engine removed from the frame.

Remove the snap ring (16).

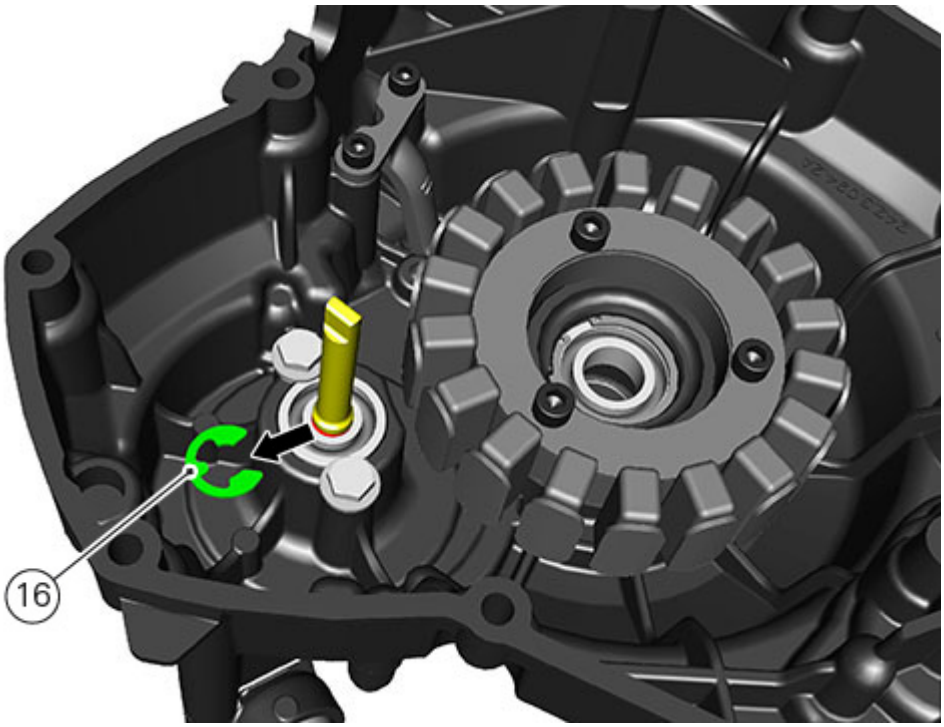

Loosen the upper screws (1) retaining the pump cover (4).
Loosen screws (2) and (3) and collect the relevant lower washers.

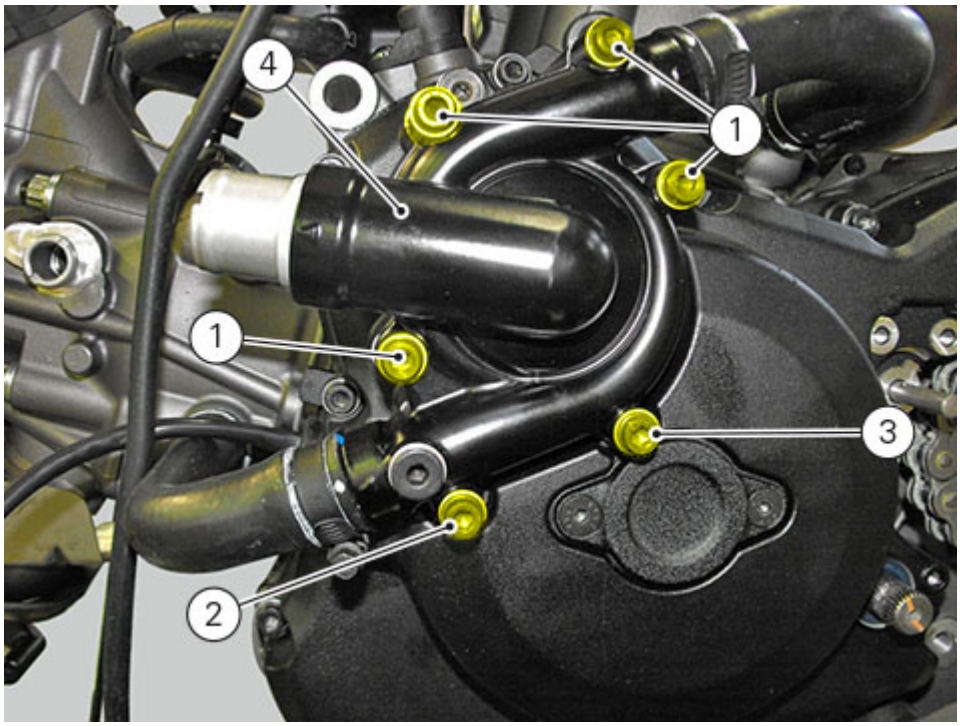

Slide out the water pump cover and collect the two bushes (5).

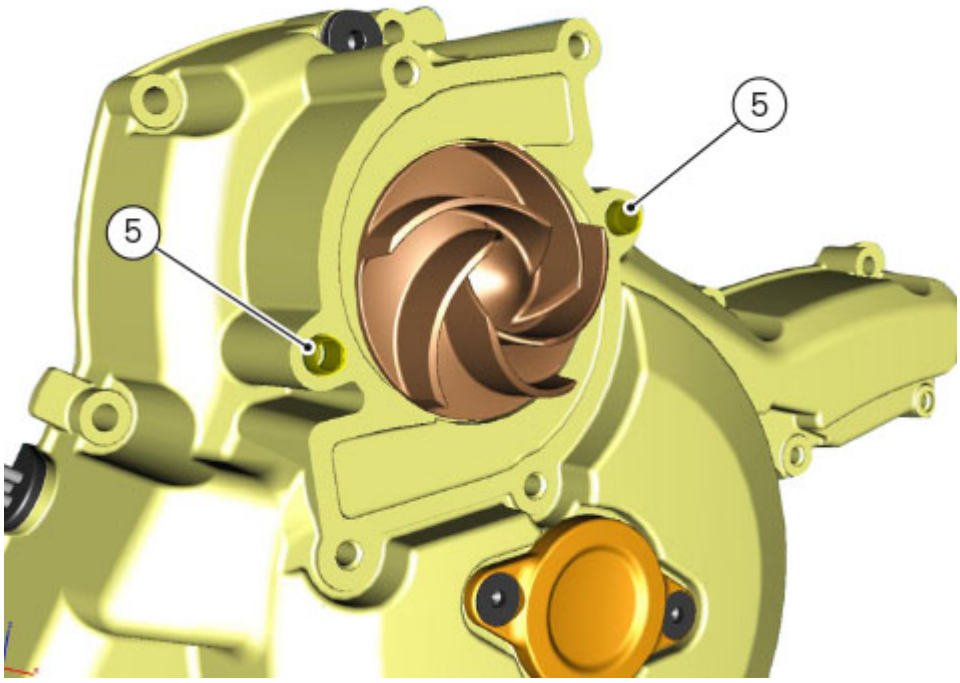

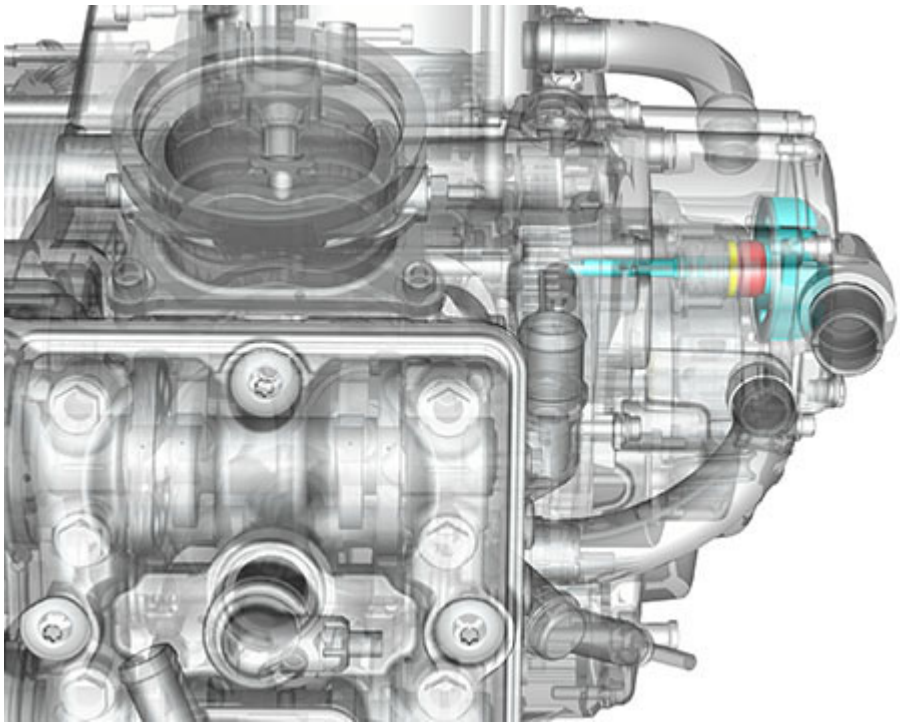

Clean the pump housing from any coolant scale. Check the bearing wear by turning the impeller shaft (6); in case of excessive clearance, it is necessary to replace them as follows.

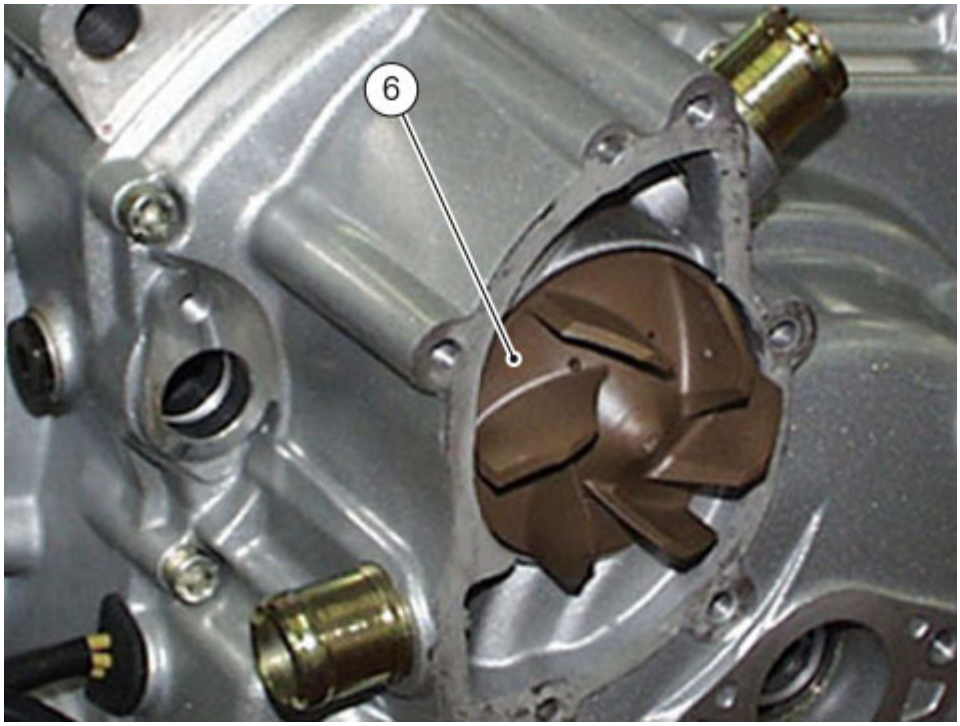

Remove the snap ring (7) from the impeller shaft, and the washer (8) underneath.
Slide off the impeller (6) with the sealing ring (9) from the outside.
Collect the ceramic washer and the seal ring union (14).

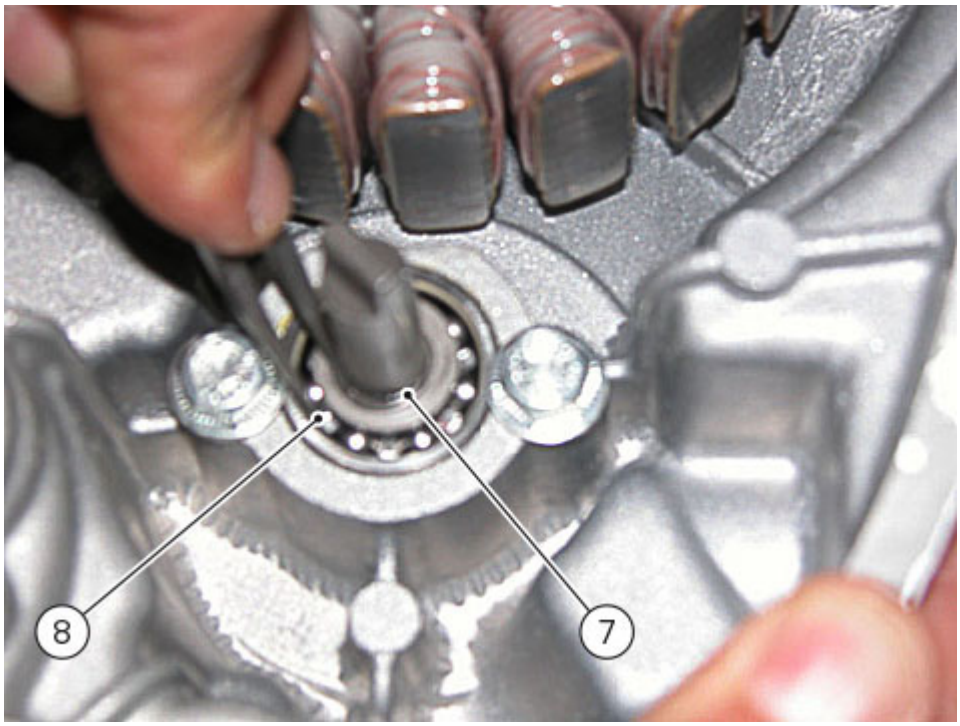
8
7

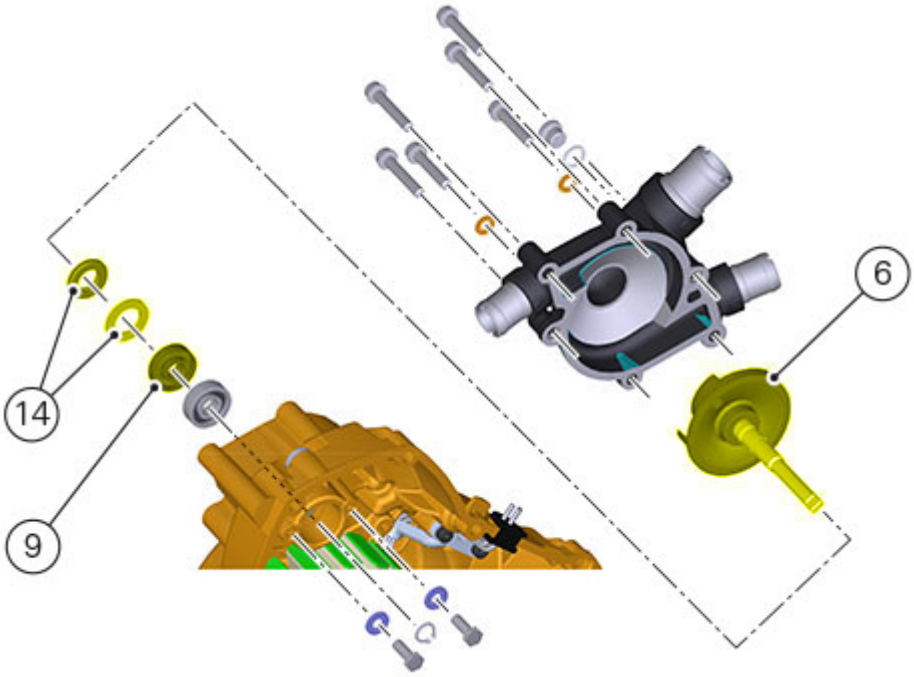
6
14
9

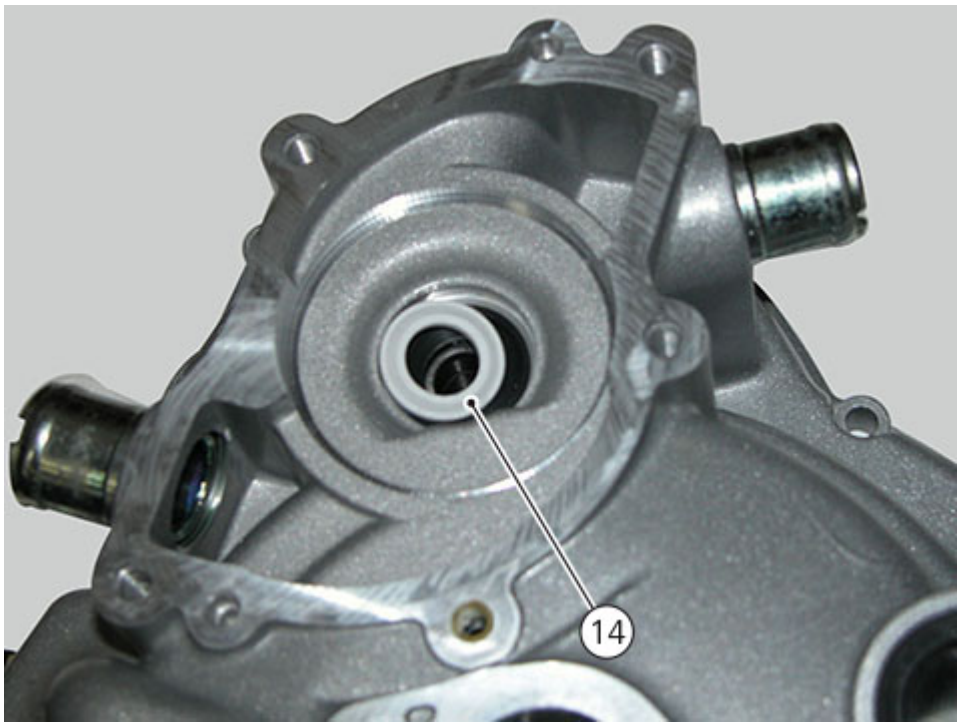

Undo and remove the screws (10) with the washer (11).

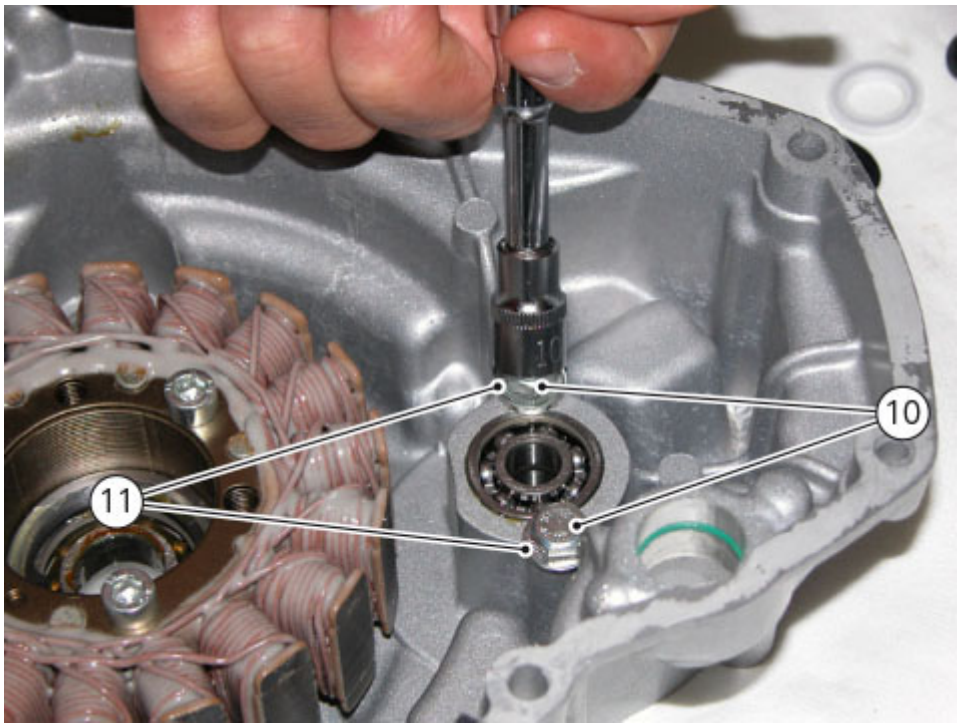

Working from the impeller side, use a suitable drift to press on the inner ring of end bearing (12) until it can be extracted from the cover.
Use the same technique to remove the other bearing (13).
Remove the inner spacer (15).

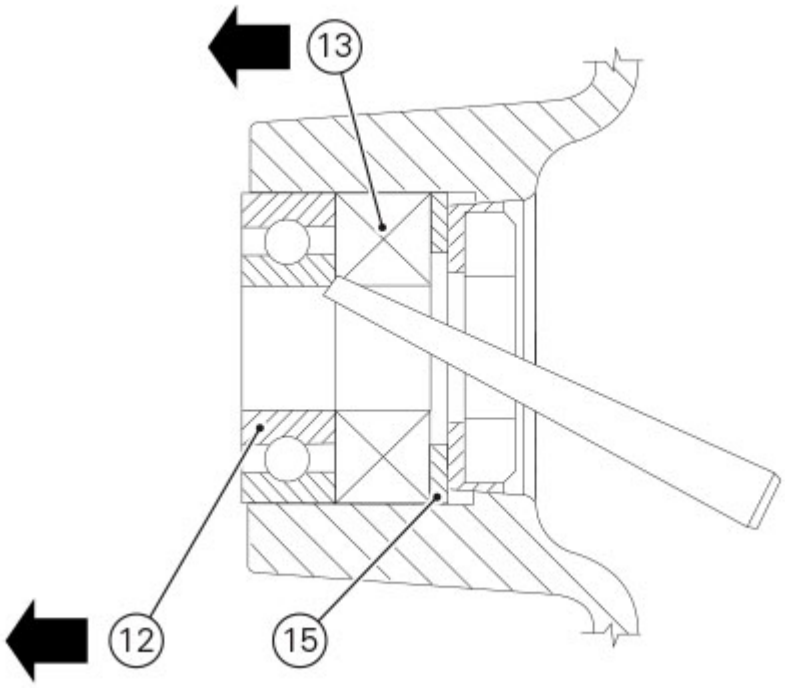

Check the condition of the mechanical seal components (9) and of the counter-washer (14): there should be no signs of deformation, cracking, or excessive wear. In case of damage, both components must be replaced.

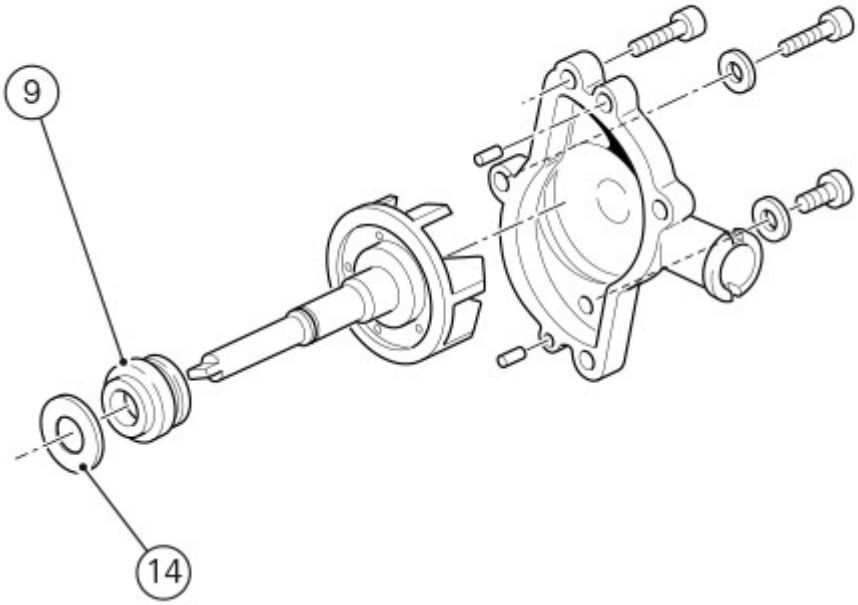

Checking the engine timing

Remove the seat (Removing the seat).
Release the water radiator lower retainer and move it towards the front wheel (Removing the water radiator).
Remove the vertical head central exhaust pipe (Removing the exhaust system).
Remove the fuel tank (Removing the fuel tank).
Remove the airbox, the throttle body, the blow by and the oil breather pipe (Removing the airbox and throttle body).
Remove the secondary air system pipes (Removing the secondary air system).
Release the ABS wiring and tubes from the wiring cover fixed on the vertical head.
Remove the vertical head wiring cover (Checking the valve lift).
Disconnect the spark plug caps (Replacing the spark plugs).
Remove the cylinder head covers (Removing the camshafts).
Remove the supply system and the injectors from the intake manifolds (Removing the airbox and throttle body).
Remove the water radiator lower retainer from the engine (Removing the water radiator).

Set the engine to the condition described for the operation under "Checking and adjusting the valve clearance", indicated before.
Install tool no. **88713.2087** (A) in the spark plug bore to determine the piston TDC, the gauges (B) on tool no. **88765.1518** and the timing check tool (degree wheel (C) no. **88713.0123** with graduated disk).

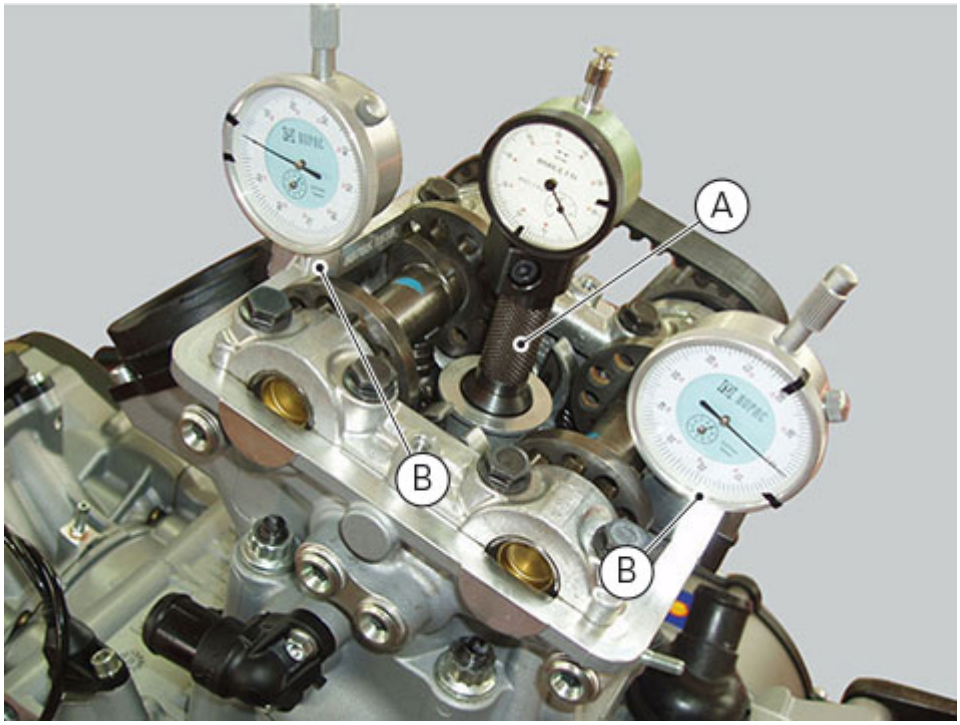

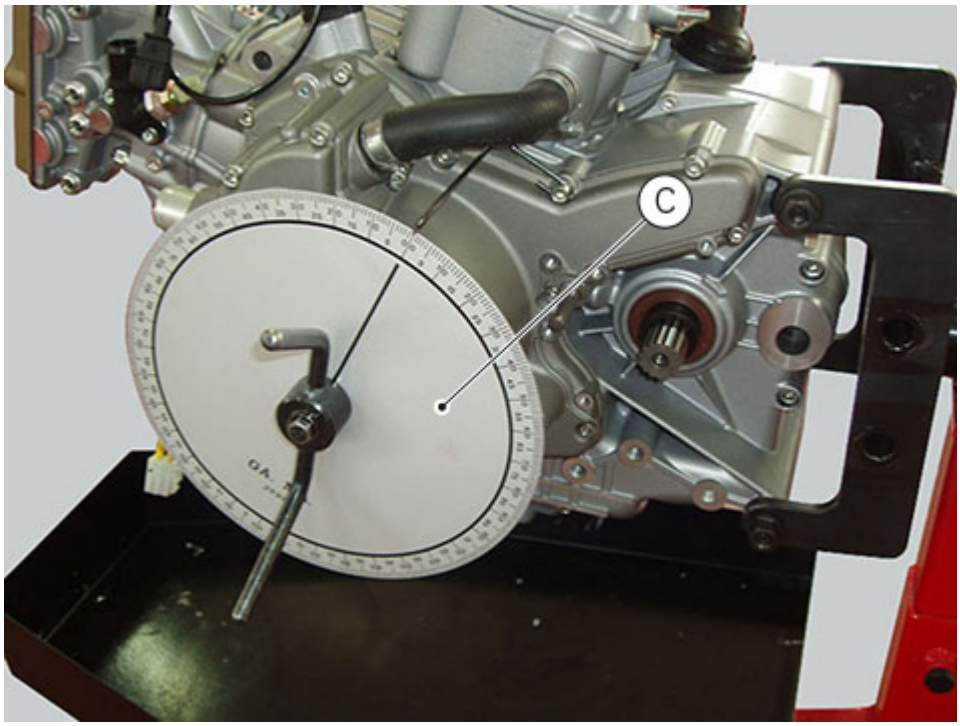

Set the opening valve clearance to zero when the camshafts are in rest position by fitting a feeler gauge, of suitable thickness, between the upper rocker arm and the opening shim.
Check that in this condition the camshaft can rotate. If it moves stiffly, use a thinner feeler gauge.

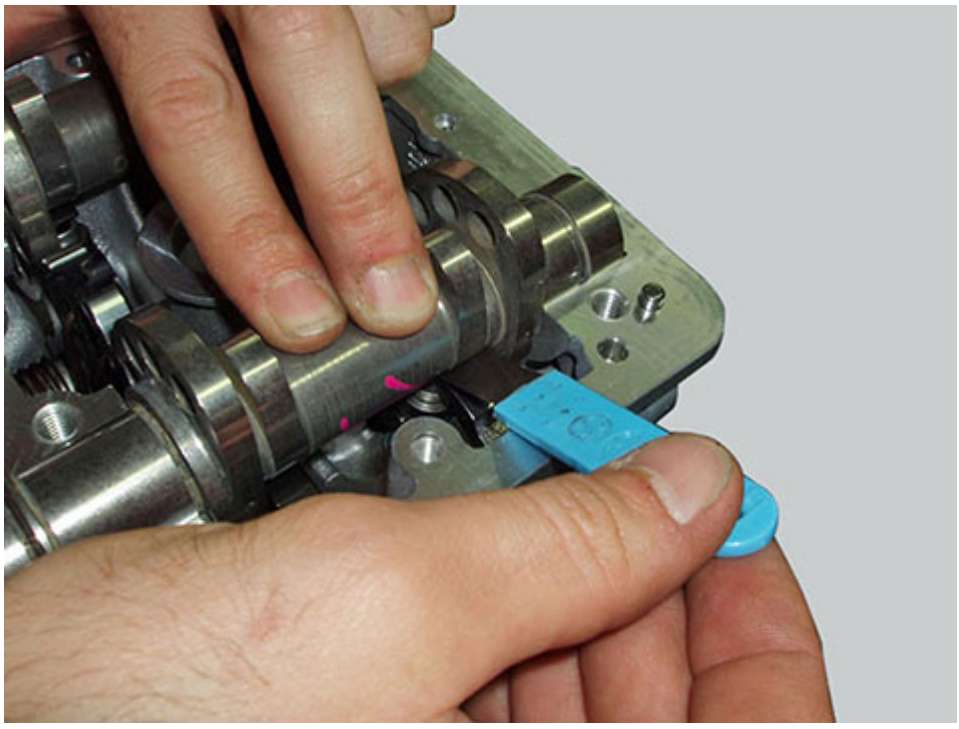

In this condition, with the piston of the horizontal cylinder at TDC with the valves fully closed as confirmed by the reading on gauge (A), set the gauges (B) to zero.
Tension the belts according to the value specified in next lines.
Turn the degree wheel (C) counter clockwise until the gauge dial (B), on the exhaust side, shows a lift of 1 mm.
Check that the value of the angular displacement read on the degree wheel (C) is the specified one (Timing system/valves).
Continue to rotate in the same direction until you obtain a lift of 1 mm on the intake side. Check the angular value on the degree wheel. Continue to rotate until you obtain an intake valve lift of 1 mm on the gauge (B), during closure of the valve for the compression stroke. Check the angular value with the prescribed one (Timing system/valves). Continue to rotate the degree wheel (C) counter clockwise until you obtain a lift of 1 mm of the exhaust valve, when opening or closing the valve.
Check the angular displacement value against the specified value.
Repeat the procedure for the vertical cylinder.
A tolerance of ±3° is allowed in the values detected with the described procedure compared to the specified ones (Checking valve lift).

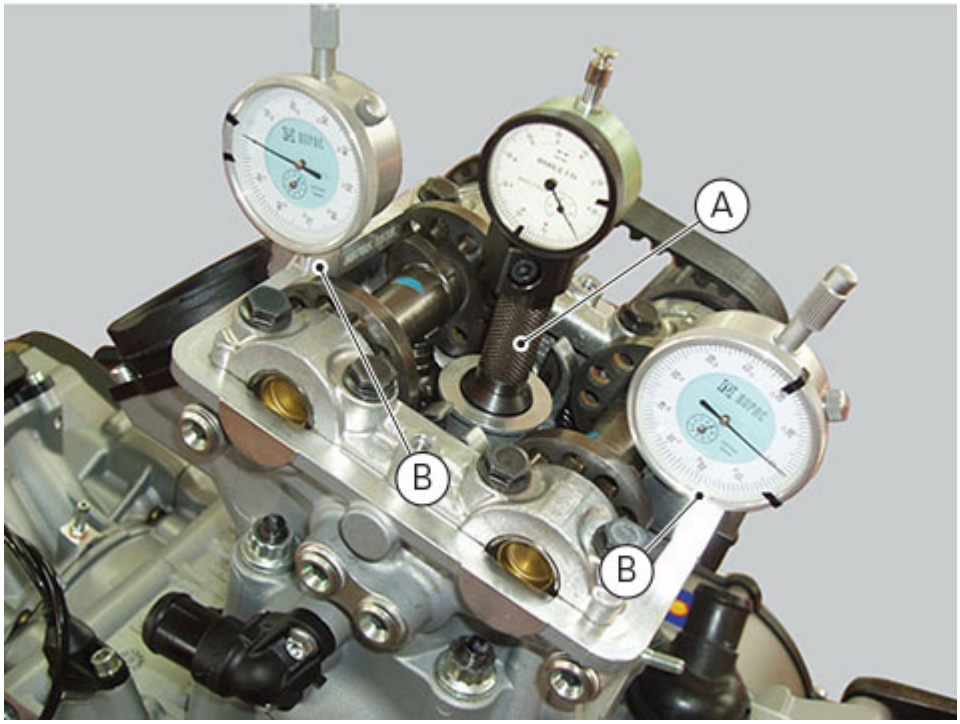

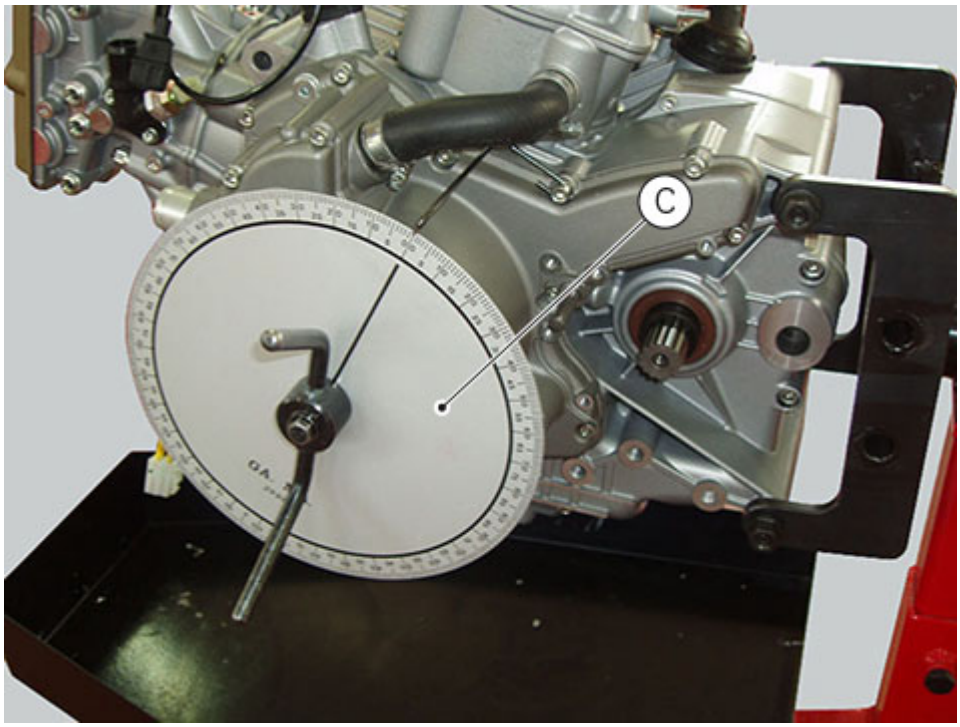

Remove the installed tools to check timing. Then tension the belts to the prescribed operation value.
In case of values different from the recommended ones (timing system/valves), loosen the fixing screws (D) of the timing belt rollers and correct the value detected by turning the ring nut of the timing shaft with the supplied wrench (E) part no. **88713.1806**.
Then block the three screws (D) retaining the timing belt roller to a torque of 10 Nm (Min. 9 Nm - Max. 11 Nm) and mark the new position on the components.

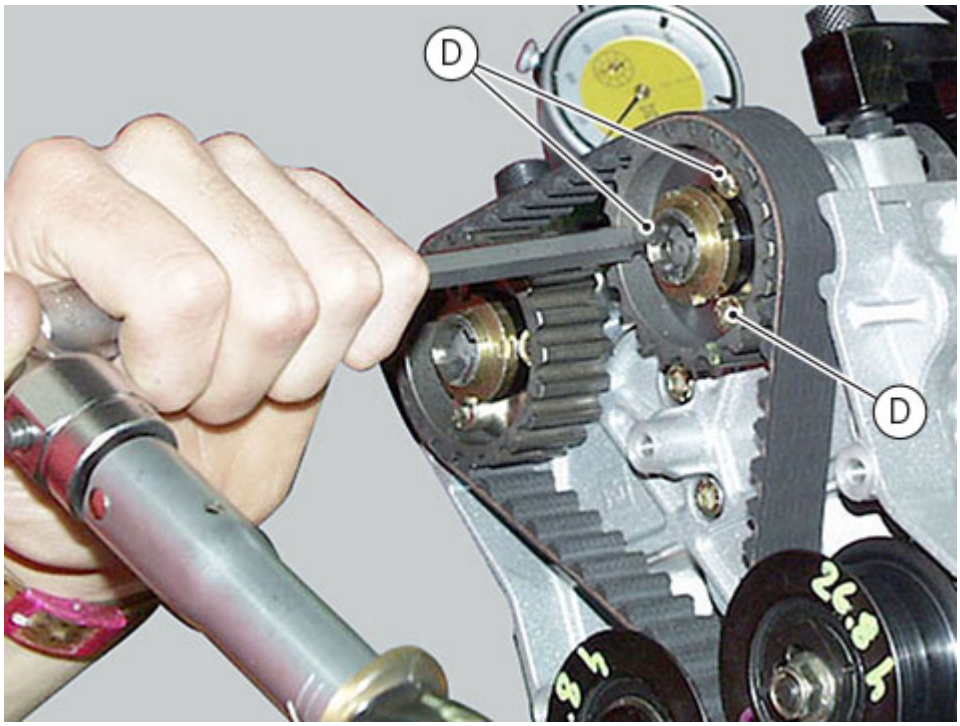

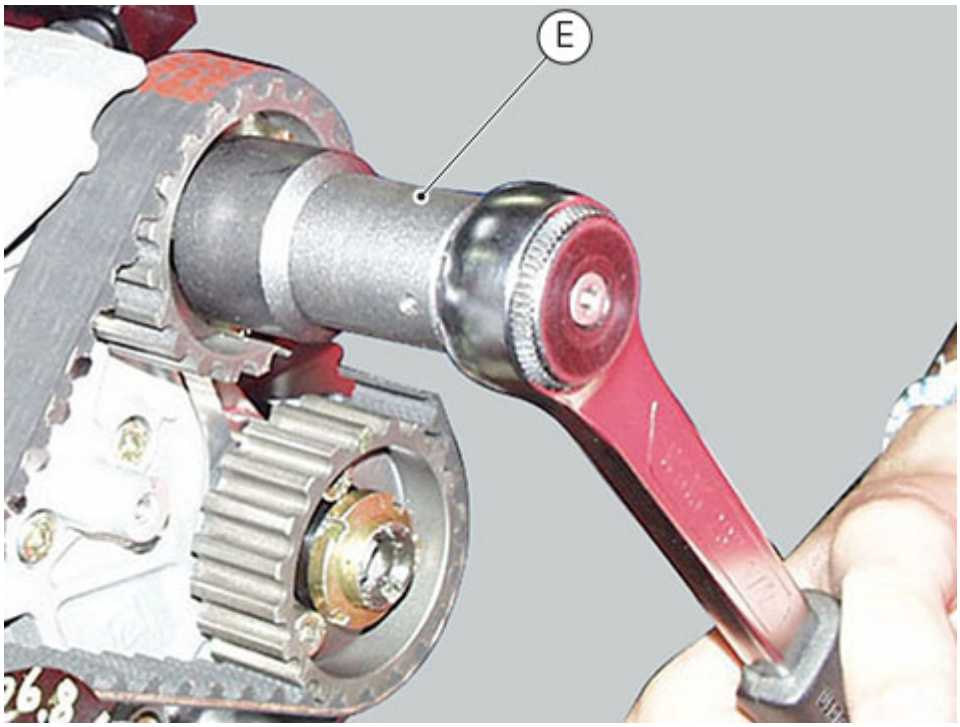

Specified values:

Adjusting the belt tension			
	Reference	Assembly value (new belt)	Recovery value (used belt)
Cold belt tension adjustment	DDS	110±5 Hz (horizontal)	80±5 Hz (horizontal)
		110±5 Hz (vertical)	80±5 Hz (vertical)
	Cold min. limit value		70 Hz
	Tension value accepted upon engine overhaul	HORIZONTAL	VERTICAL
		Tension (Hz) ±5	Tension (Hz) ±5

		Min. 80	Min. 88
		Max. 100	Max. 100

Timing diagram		
Timing diagram with valve clearance of 1 mm	Intake	Opening 4° B.T.D.C. Closing 58° A.B.D.C.
	Exhaust	Opening 58° B.B.D.C. Closing 7° A.T.D.C.
Intake valve diameter	43.5 mm	
Exhaust valve diameter	35.5 mm	

Refit the components removed in the procedure.

Refit the cylinder head covers (Refitting the camshafts).
Connect the caps to the spark plugs (Replacing the spark plugs).
Refit the cable rings on the vertical head (Checking the valve lift).
Position and tie the ABS system hoses and wiring on the vertical head (Positioning wiring/hoses).
Connect the secondary air system pipe on the cylinder head (Removing the secondary air system).
Fix the timing belt covers (Refitting the timing belt external covers).
Refit the airbox (Refitting the airbox and throttle body).
Refit the fuel tank (Refitting the fuel tank).
Refit the vertical head central exhaust pipe (Refitting the exhaust system).
Fix the water radiator to the frame (Refitting the water radiator).
Refit the seat (Refitting the seat).

Checking valve lift

Remove the seat (Removing the seat).
Remove the fuel tank (Removing the fuel tank).
Release the water radiator lower retainer and move it towards the front wheel (Removing the water radiator).
Remove the airbox, the throttle body, the blow by and the oil breather pipe (Removing the airbox and throttle body).
Remove the water radiator lower retainer from the engine (Removing the water radiator).
Remove the secondary air system pipes (Removing the secondary air system).
Release the ABS wiring and tubes from the cable ring fixed on the vertical head.
Disconnect the spark plug caps (Replacing the spark plugs).

Note
For clarity, the figures show the engine removed from the frame.

Working on the vertical head, loosen the three screws (1) and remove the wiring and tube cover (2).

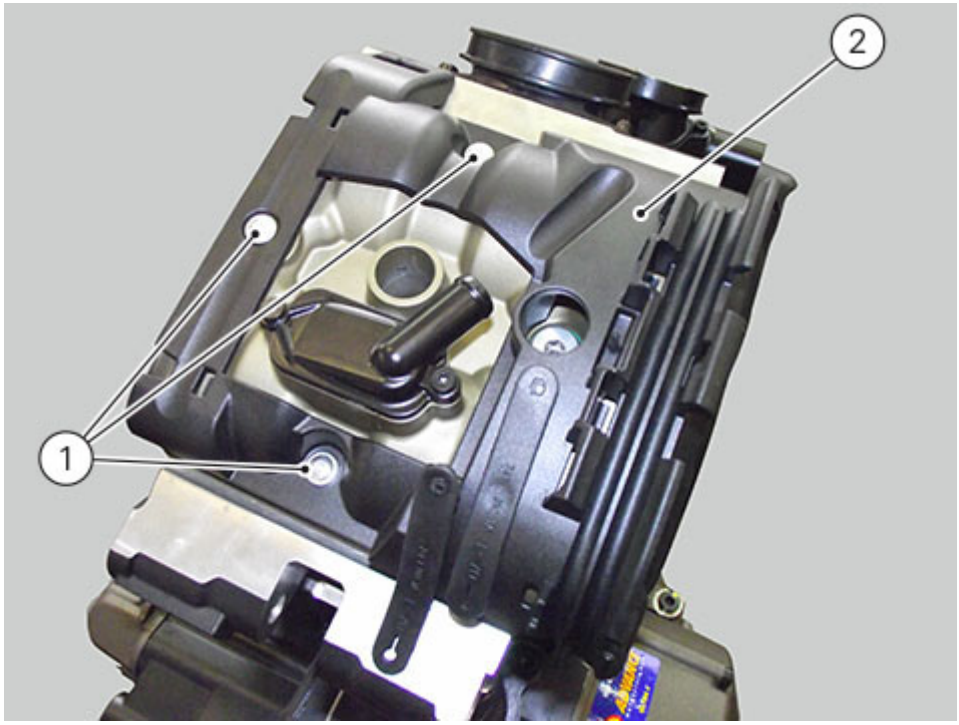

Move the piston of the cylinder being checked to TDC upon combustion stage: in this condition, all valves are closed and the camshafts come in rest position and, therefore, free to rotate; check the valve lift.
Fit tool (G) no. **88765.1690** on the head: support (S) of tool no. **88765.1690** with the intake indication must be positioned on the exhaust side whereas support (T) of tool no. **88765.1690** with the exhaust indication must be positioned on the intake side.
Seat the plate (E) and tighten the screws (F).

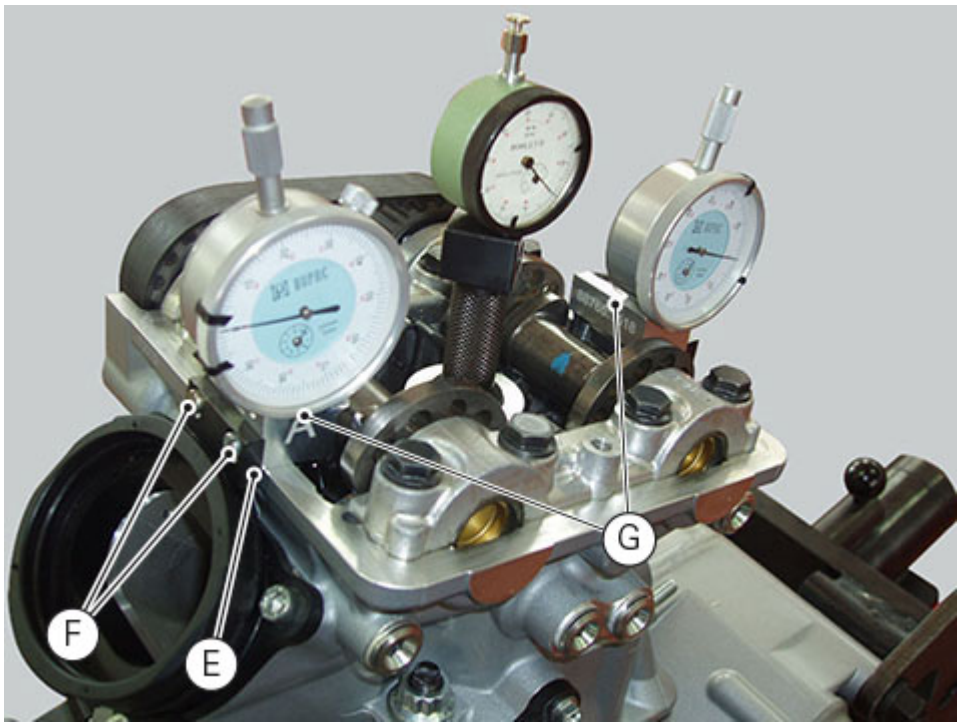

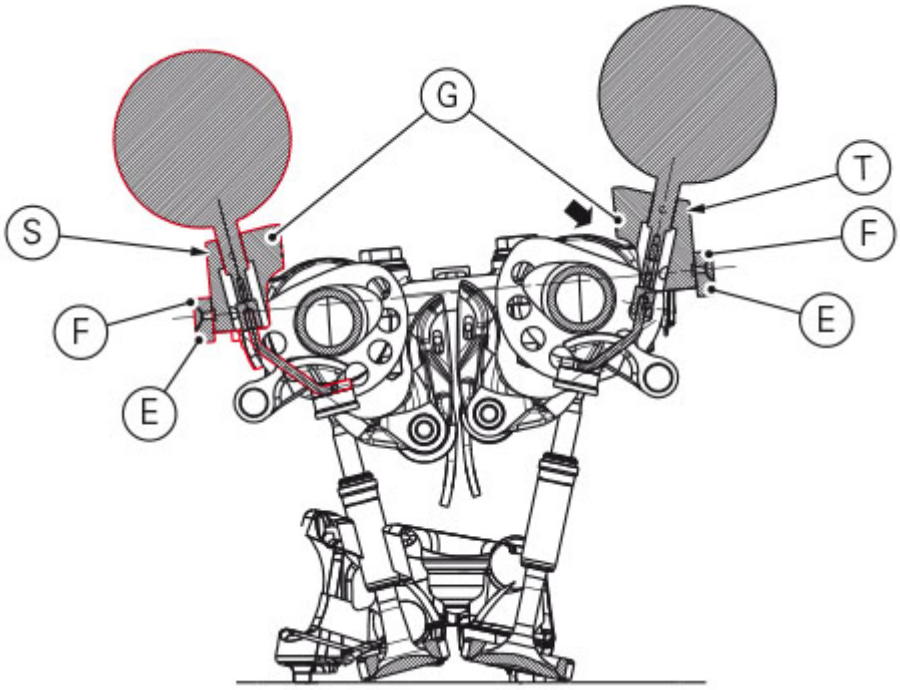

Set the opening valve clearance to zero when the camshafts are in rest position by fitting a feeler gauge, of suitable thickness, between the upper rocker arm and the opening shim.

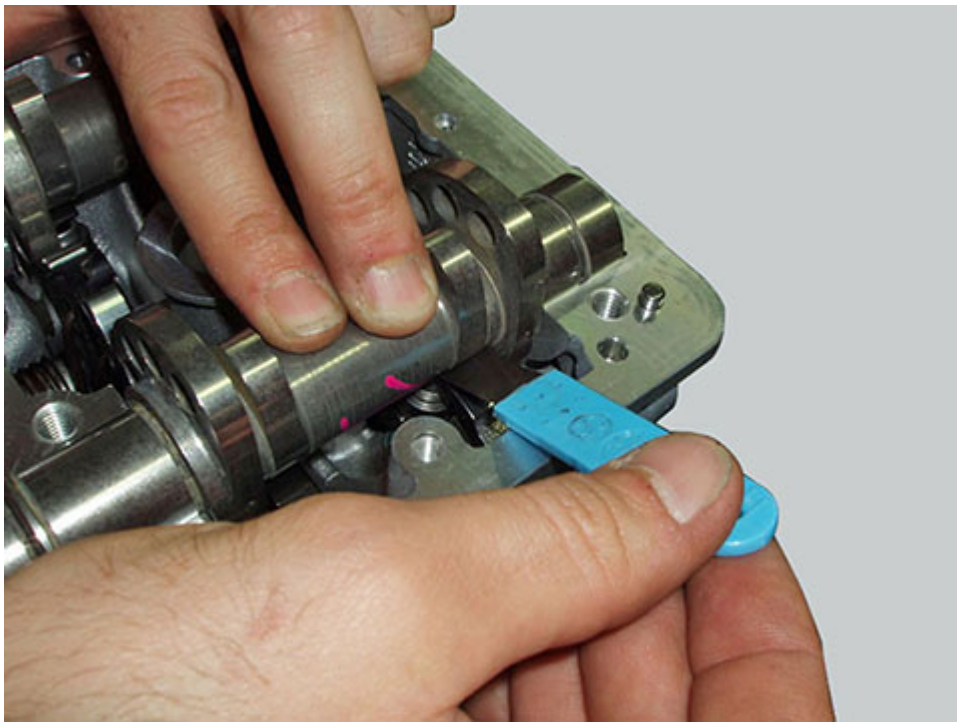

Lock dial gauge (V) into the seat support (T) and position probe (R) against the face of the closing shim.
Set the dial gauge to zero when the valve is fully closed.
Rotate the intake camshaft so as to allow the intake valves to lift fully.
Check on the dial gauge that the measured value corresponds to the prescribed one.
Repeat the same operation for the exhaust valves, using dial gauge (V) in support seat (S) and probe (U).

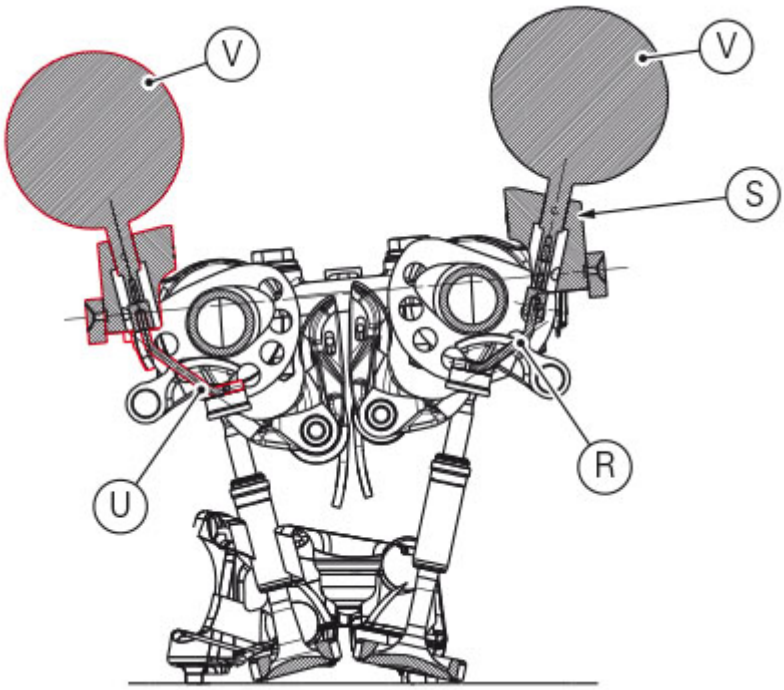

Specified values:

Timing diagram		
Timing diagram with valve lift of 1 mm	Intake	Opening 4° B.T.D.C. Closing 58° A.B.D.C.
	Exhaust	Opening 58° B.B.D.C. Closing 7° A.T.D.C.
Intake valve diameter	43.5 mm	

Exhaust valve diameter	35.5mm

Working on the vertical head, position the wiring cover (2) and tighten the three screws (1).

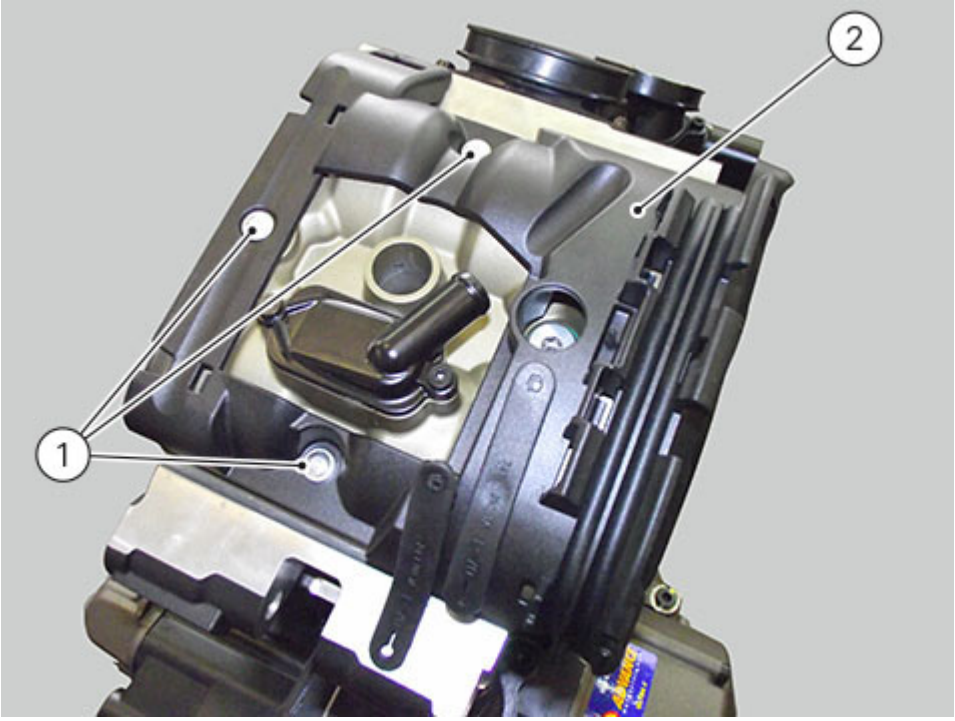

Connect the spark plug caps (Replacing the spark plugs).
Position the ABS tubes and wiring in the cable ring fixed on the vertical head (Routing wiring/hoses).
Position the secondary air system pipes (Refitting the secondary air system).
Refit the airbox, the throttle body, the blow by and the oil breather pipe (Refitting the airbox and throttle body).
Restore and tighten the water radiator lower retainer and move it towards the front wheel (Refitting the water radiator).
Refit the fuel tank (Refitting the fuel tank).
Refit the seat (Refitting the seat).

Checking and adjusting the valve clearance

Remove the seat (Removing the seat).
Remove the lateral covers (Changing the coolant, Removing the water tank).
Remove the fuel tank (Removing the fuel tank).
Remove the airbox (Removing the airbox and throttle body).
Loosen the timing belt covers (Removing the timing belt external covers).
Loosen the water radiator retaining screws by leaving the radiator connected to the cooling system (Removing the water radiator).
Disconnect the coil caps.
Disconnect the secondary air units of the head covers (Removing the secondary air system).
Remove the cylinder head cover (Removing the camshafts).

Note
For clarity, the figures show the engine removed from the frame.

Loosen the two screws (1) retaining cover (2) and remove them together with gasket (3).

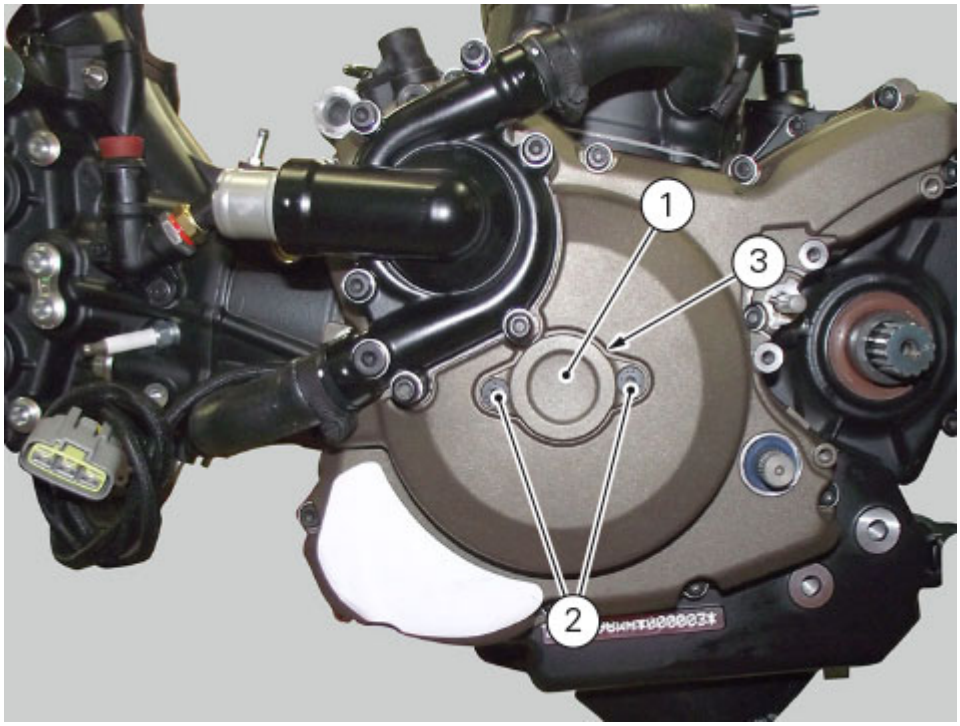

Fit the tool handgrip no. **88713.0123** in the holes of the generator cover to be able to turn the crankshaft so that the valve on which the check is carried out is in rest position and the relevant piston at the top dead centre.

Check the valve clearance of the head you are working on.

Checking the opening clearance

Using a feeler gauge, check the clearance between the opening rocker arm (A) and the lowest point of the camshaft lobe (B), taking care not to compress the rocker arm return spring.

Important
Hold the feeler gauge at a distance of at least 4-5 cm from the point of measurement between cam and rocker arm.

Important
During this operation, press on the camshaft perpendicularly to the head surface to keep it in seat.

The value must be within the prescribed ones (Timing system/valves).

	Reference	Assembly value	Check value every 24,000 km
Valve clearance	Opening rocker arm - intake	0.13÷0.18 mm	0.05÷0.15 mm
	Opening rocker arm - exhaust	0.13÷0.18 mm	0.05÷0.15 mm

If not so, remove the opening shim (4) (Removing the valves), and replace it with one of suitable height to obtain the prescribed clearance.

Note

Opening shims measuring 2.00 to 3.90 are available as spare parts: the size is punched on the shim

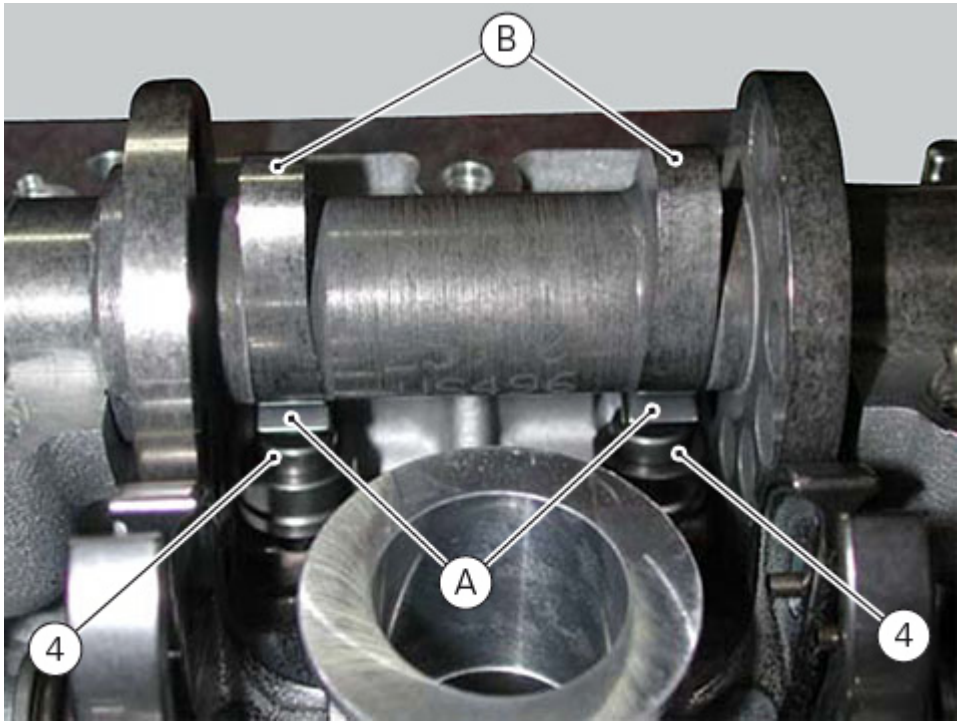





Checking the closing clearance

Using a feeler gauge, check the clearance between the closing rocker arm (C) sliding shoe and the highest point of the camshaft lobe (D).

Important
Hold the feeler gauge at a distance of at least 4-5 cm from the point of measurement between cam and rocker arm.

Important
During this operation, press on the camshaft perpendicularly to the head surface to keep it in seat.

The value must be within the prescribed ones (Timing system/valves).

	Reference	Assembly value	Check value every 24,000 km
Valve clearance	Closing rocker arm - intake	0.05÷0.10 mm	0.05÷0.25 mm
	Closing rocker arm - exhaust	0.05÷0.10 mm	0.05÷0.25 mm

If not, remove the closing shim (5), as described in paragraph (Removing the valves), and replace it with one of suitable height to obtain the prescribed clearance.

Note
Closing rocker arm shims measuring 2.2 to 4.5 are available as spare parts: the size is punched on the shim.

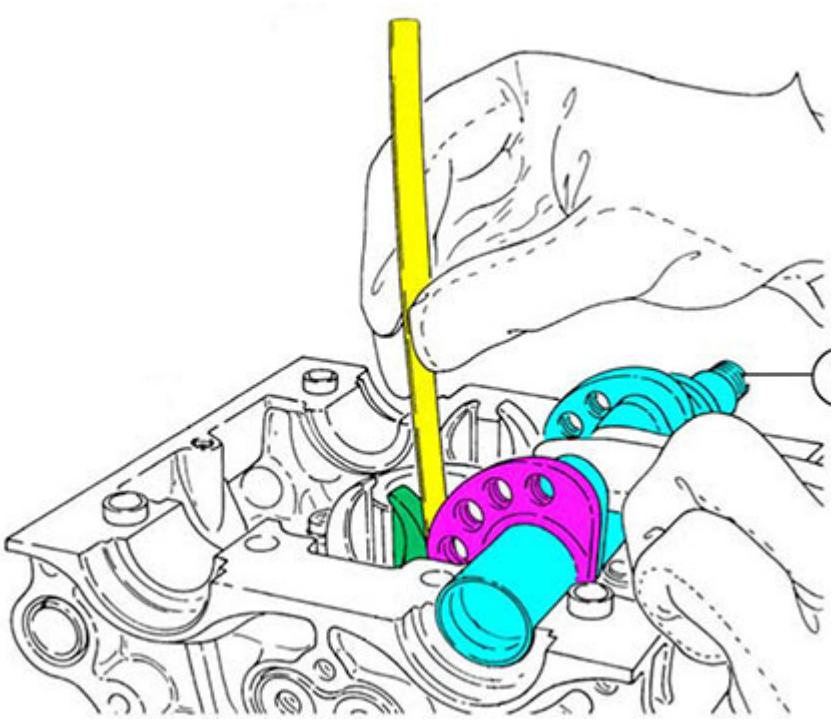

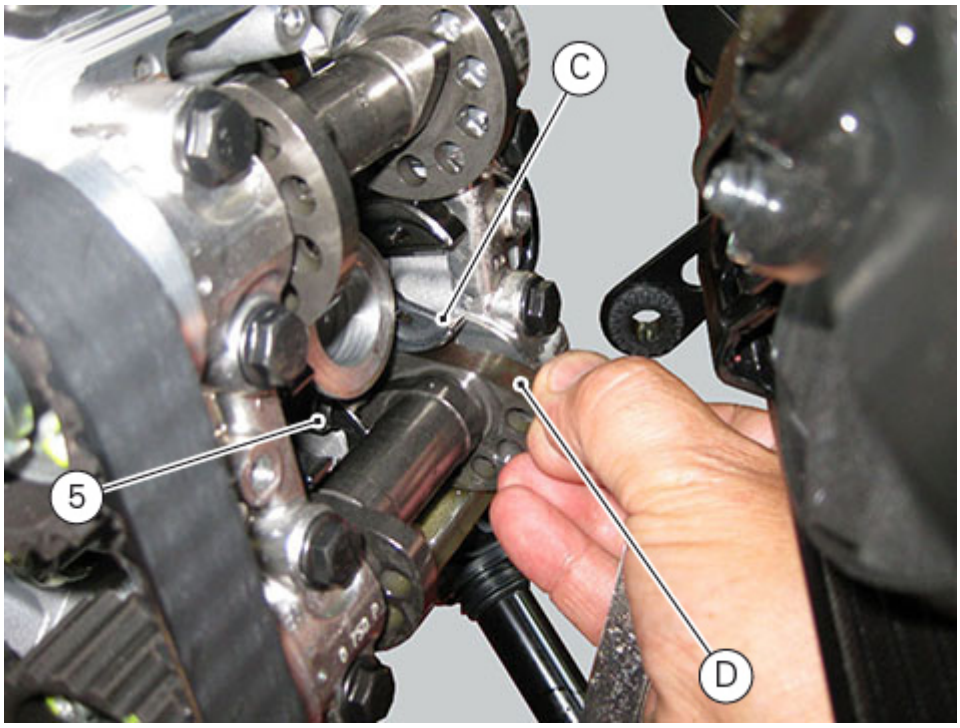
C
5
D



Restore the original conditions by refitting the previously removed components.

Refitting the timing outer covers

Position the horizontal piston-cylinder assy cover (1) and start screws (2) after applying the indicated product.

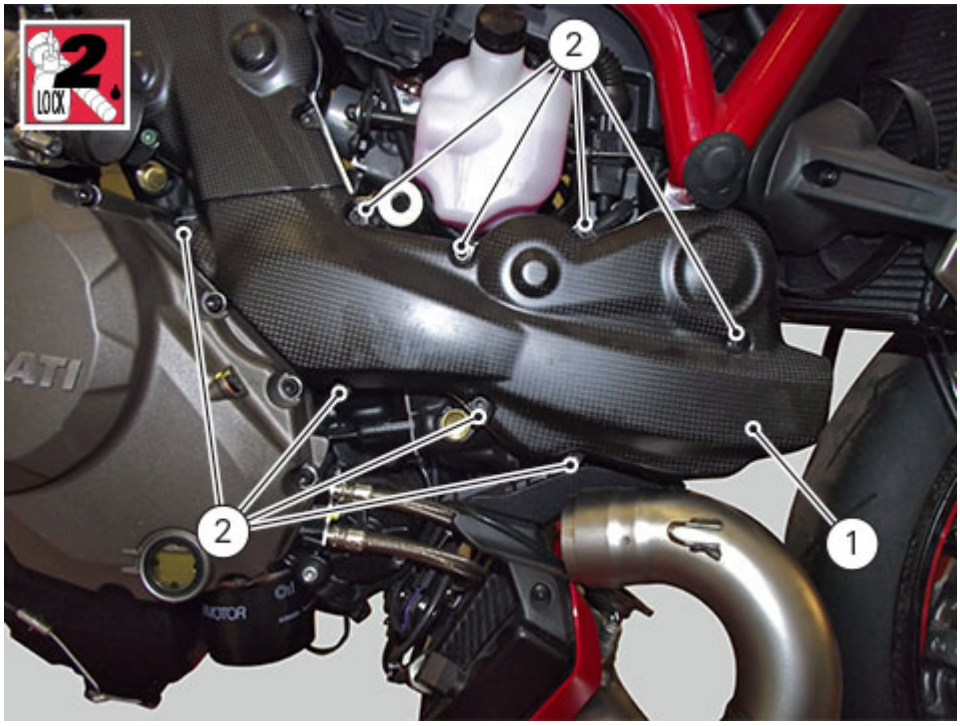

Position the vertical piston-cylinder assy cover (3) and start screws (4) after applying the indicated product.
Position the lower spacers (6) and start screws (5) on cable ring (7).

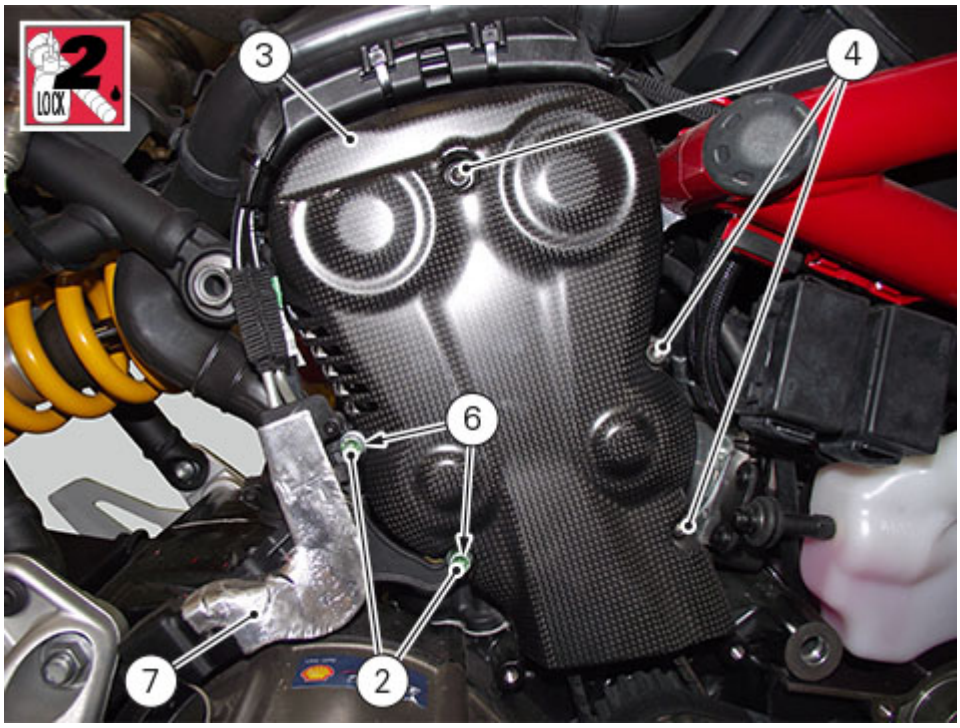

Tighten the screws (2), (4) and (5) , following the indicated sequence, to a torque of 10Nm (Min. 9Nm±Max 11Nm).

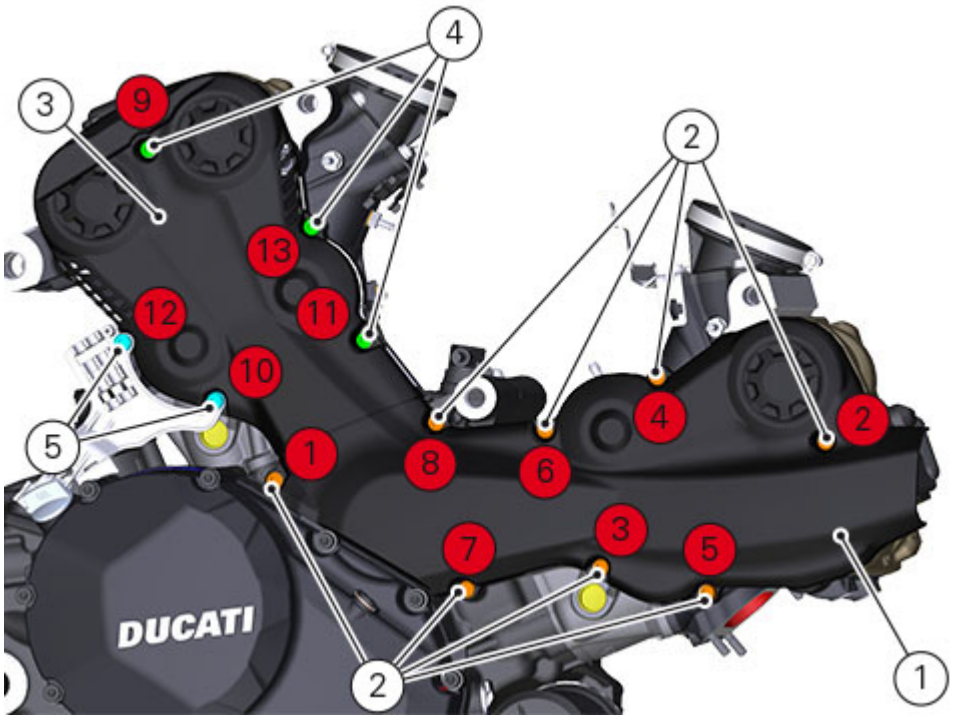

Note

If the above operations have been carried out with the engine installed in the frame, refit the previously removed parts.

Refit the vertical cylinder exhaust heat guard cover on the right side (Refitting the exhaust system).
Refit the secondary air unit (Refitting the secondary air system).
Refit the fuel tank (Refitting the fuel tank).
Refit the seat (Refitting the seat).

Refitting the timing belts

Rotate the pulleys on the timing layshaft until the timing mark on the outer pulley is aligned with the mark on the clutch cover.
In this condition, the horizontal cylinder piston will be at top dead centre.

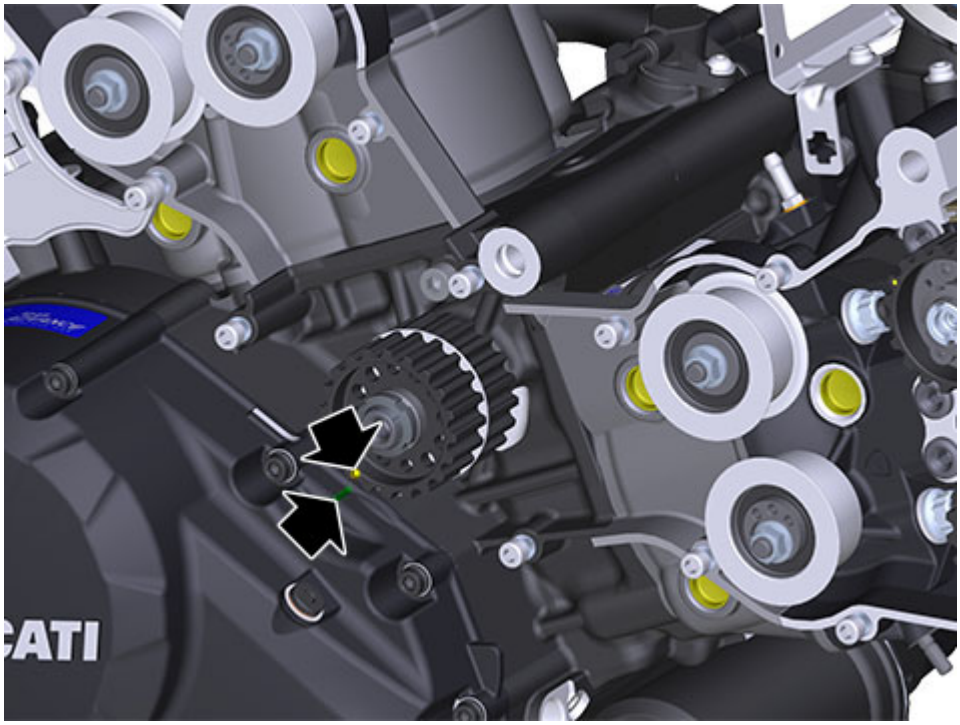

Install tool (A) no. **88713.2011** in the generator seat to prevent the rotation of the crankshaft and block it with the suitable pin. Then tighten screw M8 of the tool to 20 Nm.

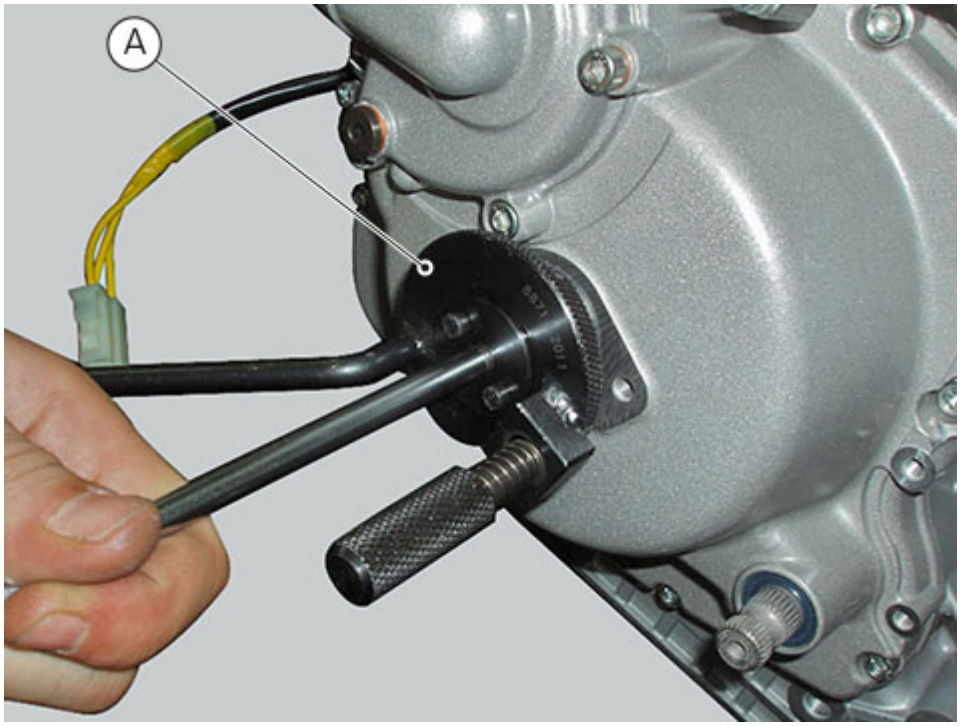

To achieve correct timing, the screws (1) securing the pulleys to the hubs must be loose and positioned in the centre of their slots.

First time the vertical head.
Use tool (B) no. **88765.1623** to insert pins (C) in seats (D) of the camshafts.

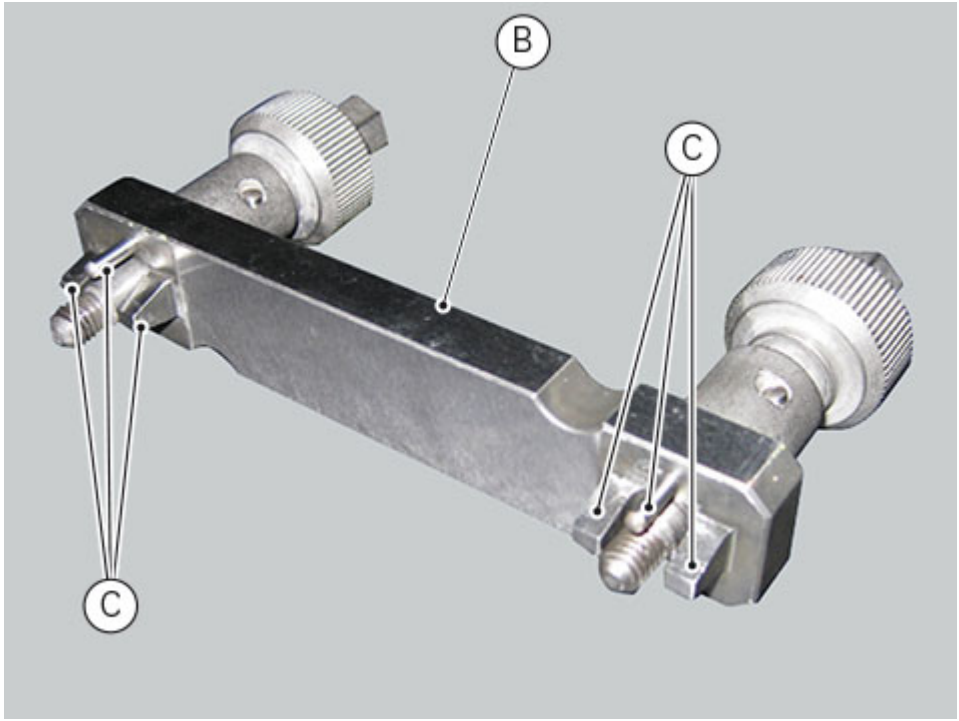

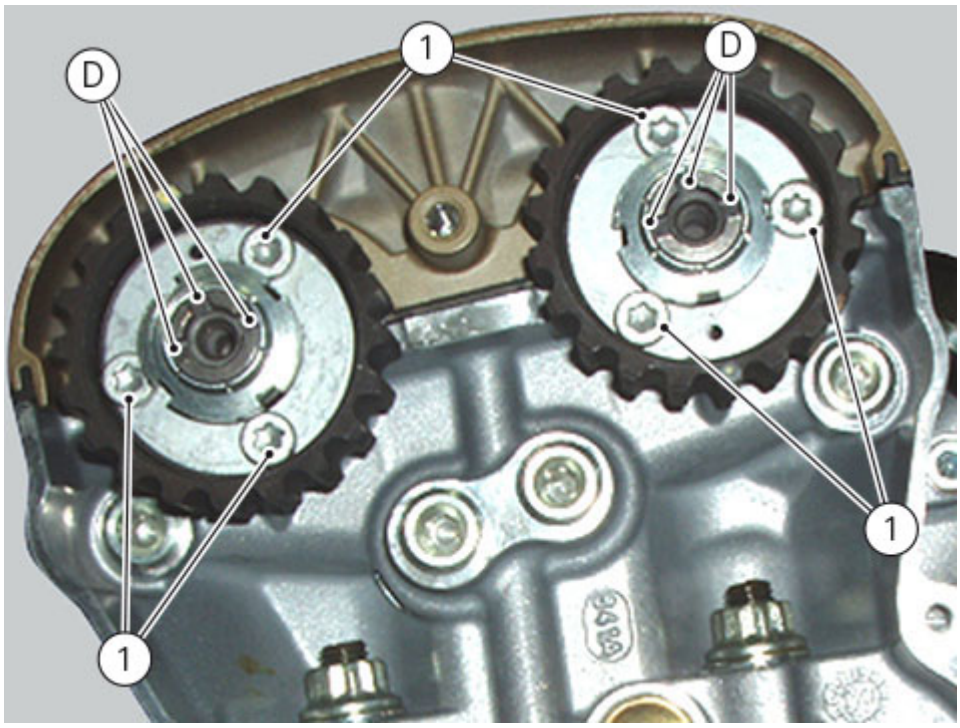

Use tool (B) no. **88765.1623** with writing "UP" and the arrow pointing to the head cover.
First position pins (C) of tool (B) no. **88765.1623** in the intake side belt roller using tool (B) wrench no. **88765.1623**.

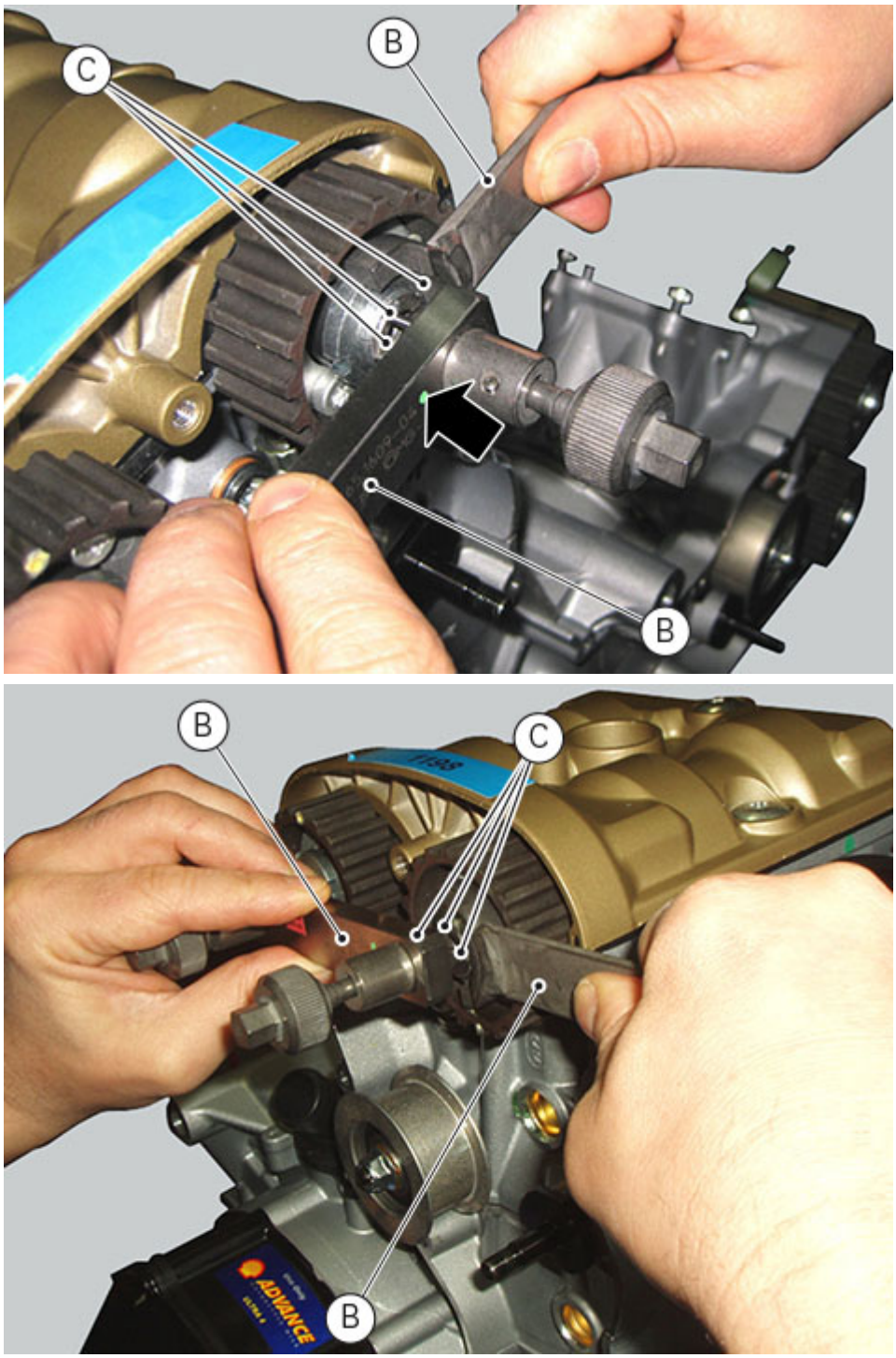

Position pins (C) of tool (B) no. **88765.1623** in the exhaust side belt roller.

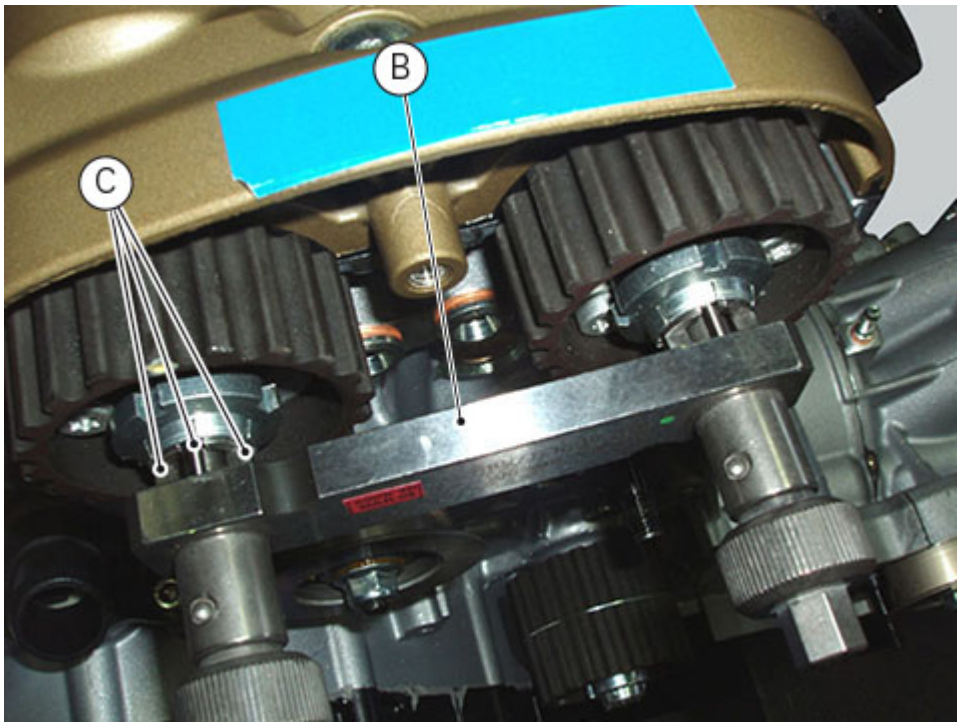

Manually screw all the way in the knobs of tool (B) no. **88765.1623**.

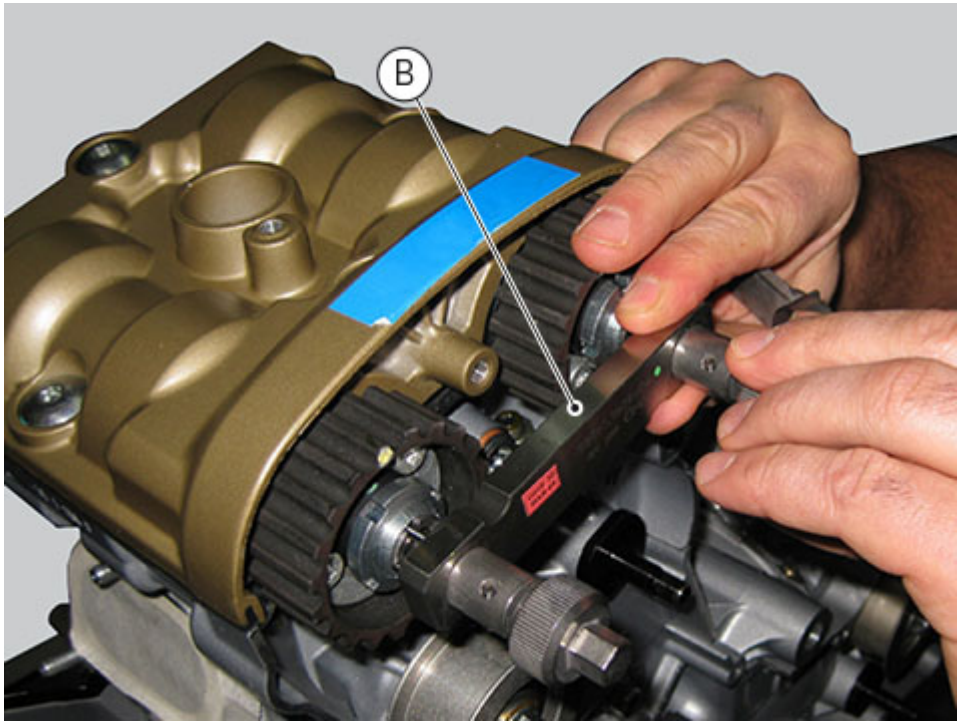

Use a torque screwdriver (E) to tighten the knob nuts of tool (B) no. **88765.1623** to a torque of 2 Nm ± 10%.

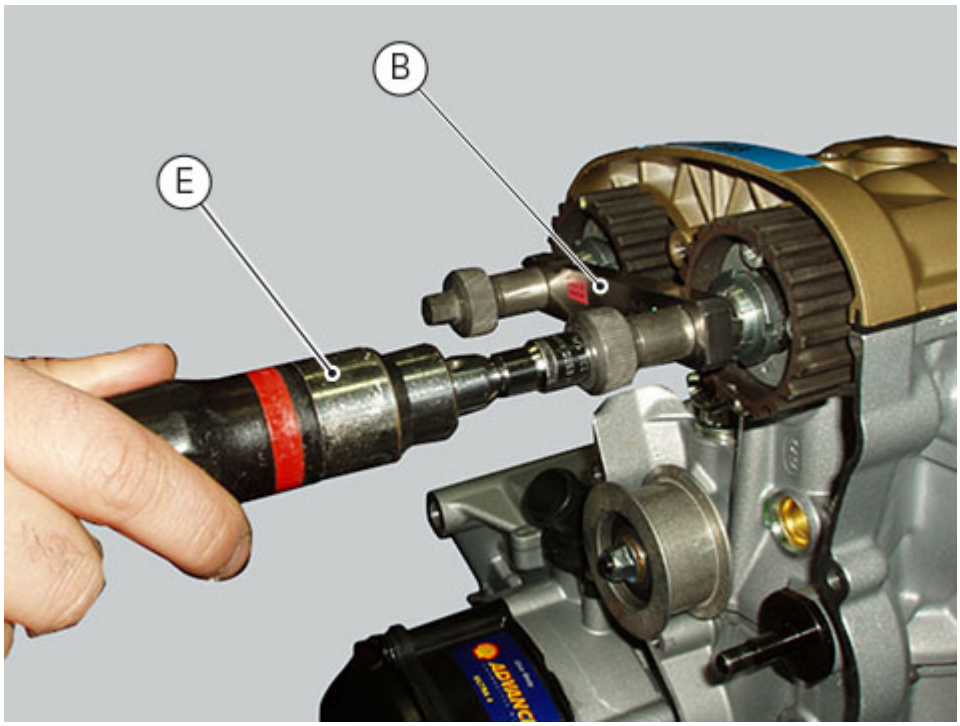

Fit the vertical piston-cylinder assy timing belt around the cylinder head belt rollers and pass it behind the idler pulley.

Note
If the used belts are to be refitted, position them in their original direction of rotation and on their original cylinder.

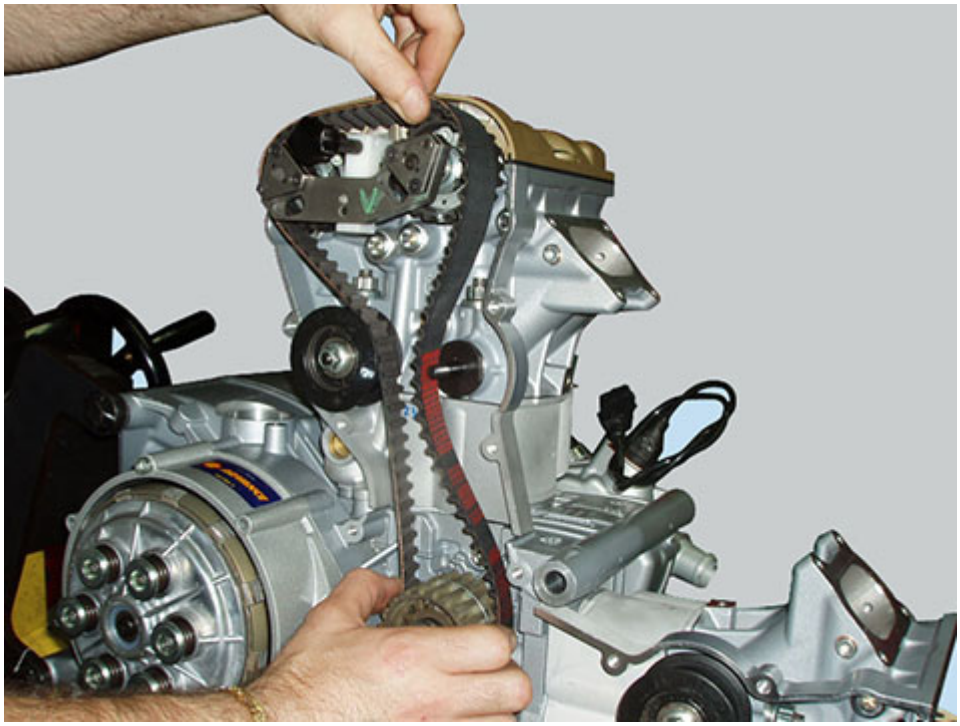

Fit the mobile tensioner (2) and the washer (3) on the cylinder head pin.
Apply recommended grease on mobile tensioner pin threads, and on nut (8) mating surface.
Start the nut (4).

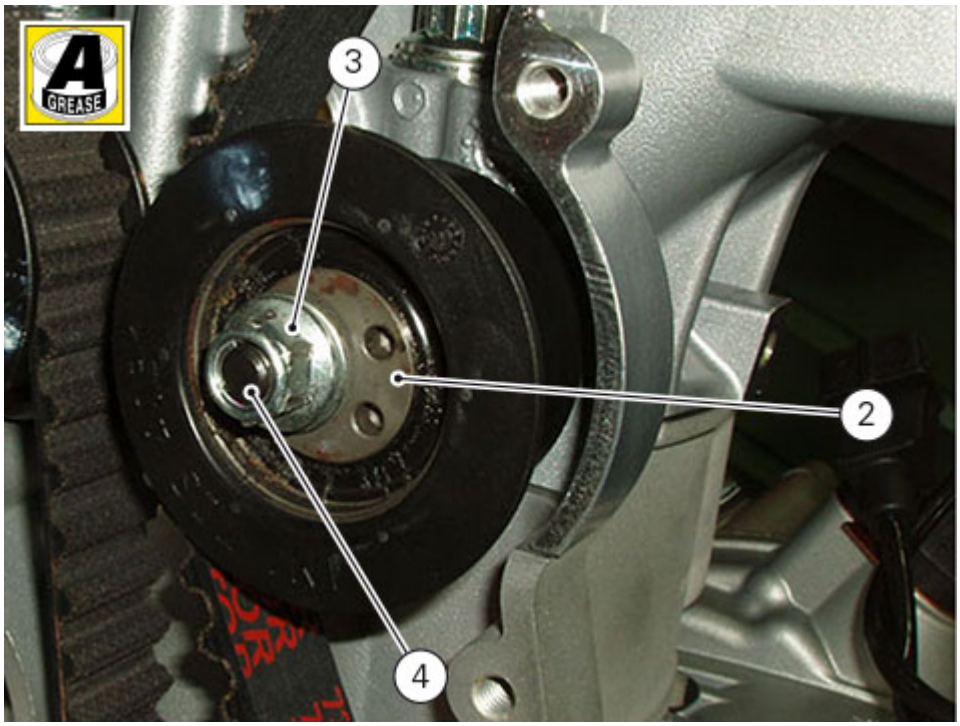

Check the tensioning value and adjust the vertical head belt (5) and horizontal head belt (6), if necessary.

Check the tensioning values on belt (5) section (I) and belt (6) section (L).

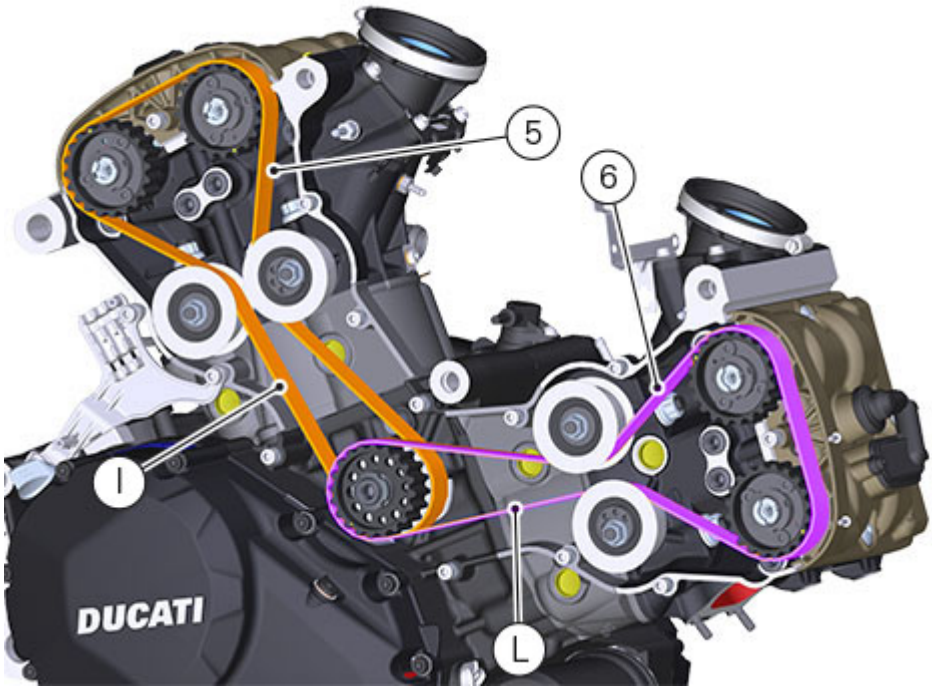

After reaching the required tension make sure that nut (4) retaining the mobile tensioner (2) is tightened to 25 Nm (Min. 22 Nm - Max. 28 Nm) and vertical head screws (1) to 10 Nm (Min. 9 Nm - Max. 11 Nm).

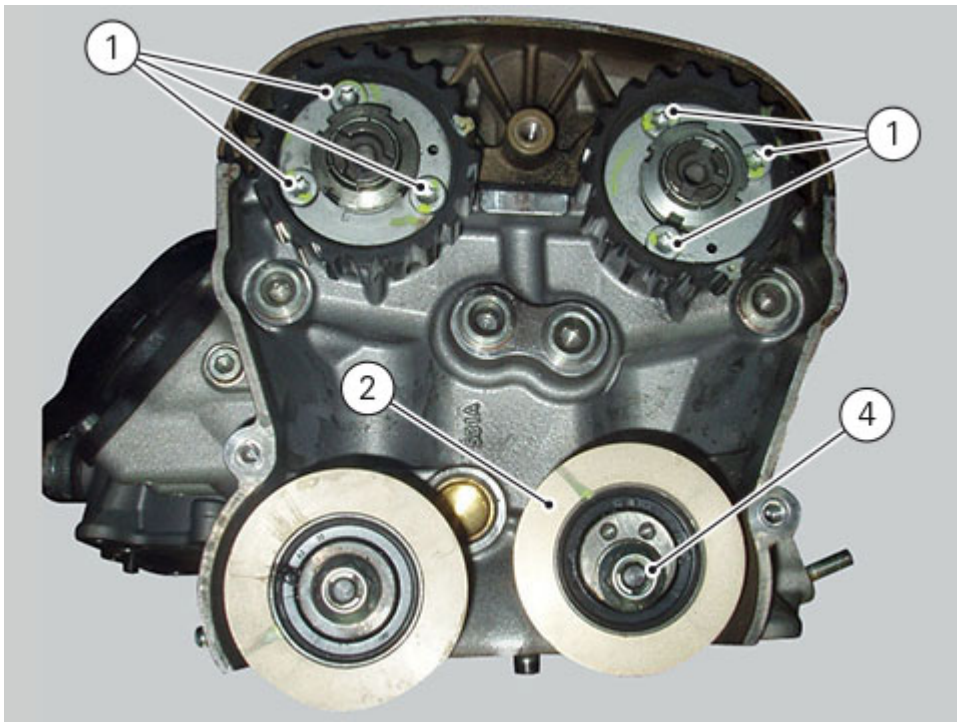

Remove tool (B) no. **88765.1623** that blocks the vertical head camshafts.
Time the horizontal head.
Use tool (B) no. **88765.1623** to insert pins (C) in seats (D) of the camshafts.

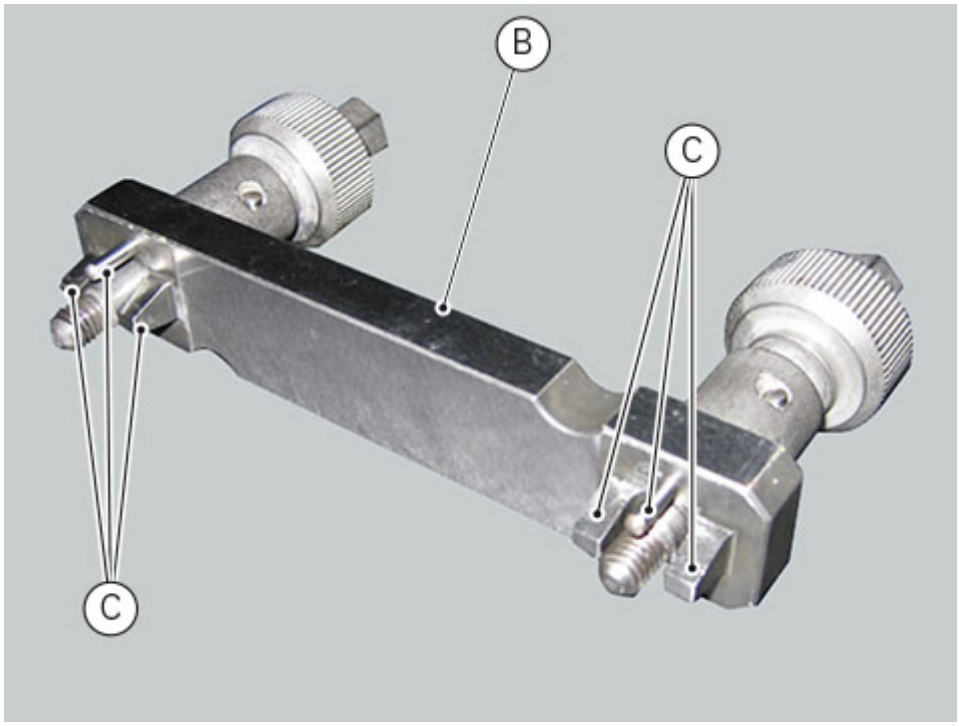

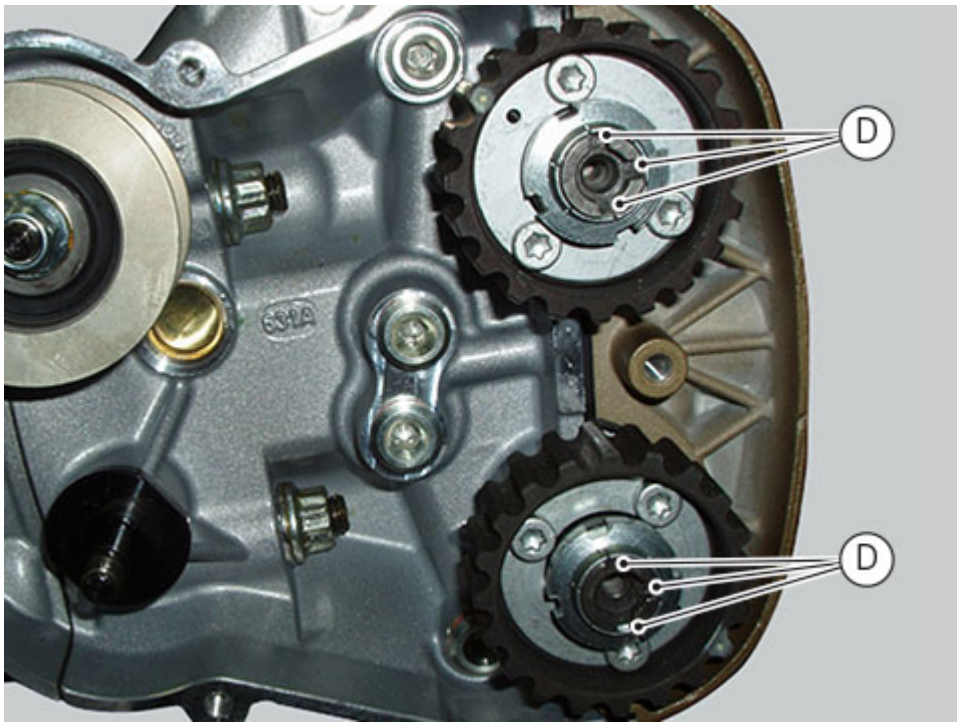

Position tool (B) no. **88765.1623** with writing "UP" and the arrow pointing to the head cover.
Manually position the pins of tool (B) no. **88765.1623** in seats (G) of the exhaust side belt roller by hand.
Manually screw all the way in the knobs of tool (B) no. **88765.1623**.
Use a torque screwdriver (E) to tighten the knob nuts of tool (B) no. **88765.1623** to a torque of 2 Nm ±10%.

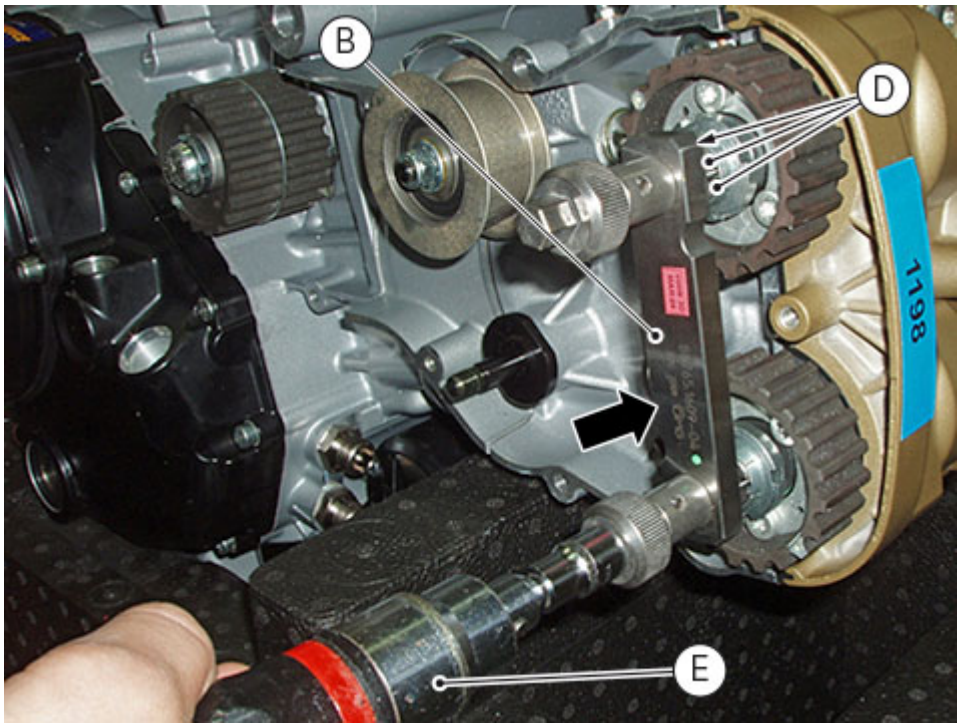

Fit the horizontal piston-cylinder assy timing belt around the cylinder head belt rollers and pass it behind the idler pulley.

Note
If the used belts are to be refitted, position them in their original direction of rotation and on their original cylinder.

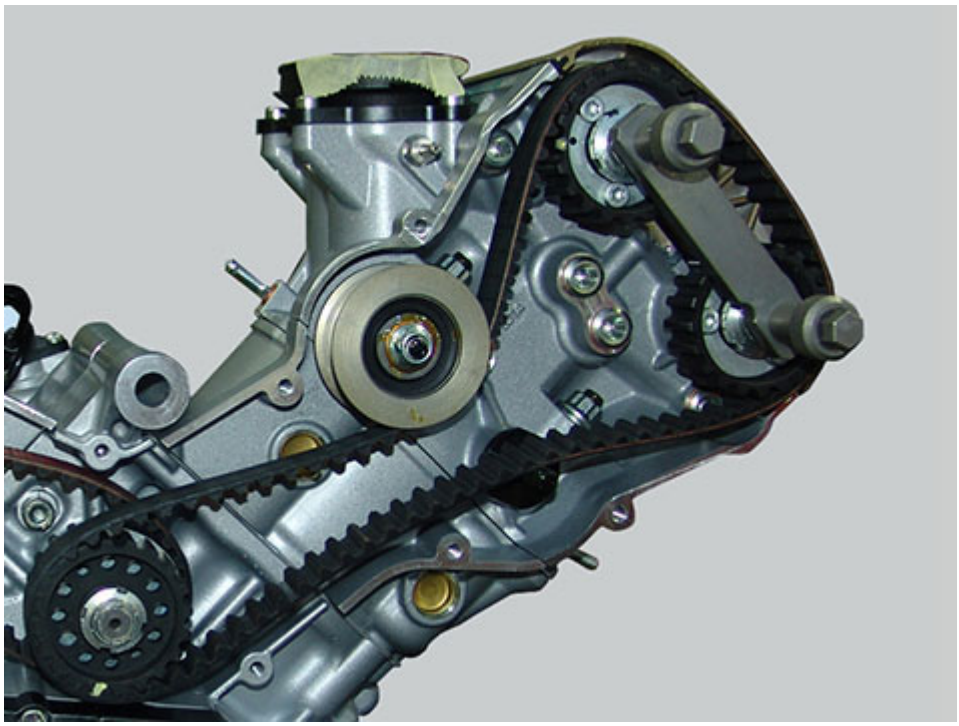

Fit the mobile tensioner (2) and the washer (3) on the cylinder head pin.
Apply recommended grease on mobile tensioner pin threads, and on nut (4) mating surface.
Start the nut (4).

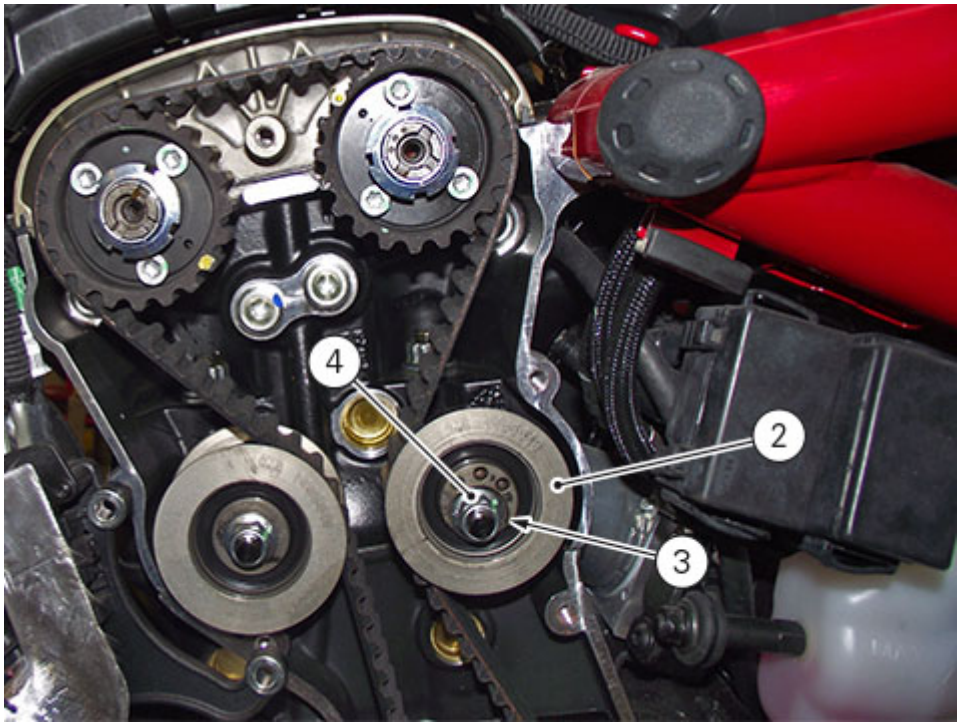

Check the tensioning value and adjust the horizontal head belt, if necessary (Checking the engine timing).
After reaching the required tension make sure that nut (4) retaining the mobile tensioner (2) is tightened to 25 Nm (Min. 22 Nm - Max. 28 Nm) and horizontal head screws (1) to 10 Nm (Min. 9 Nm - Max. 11 Nm).

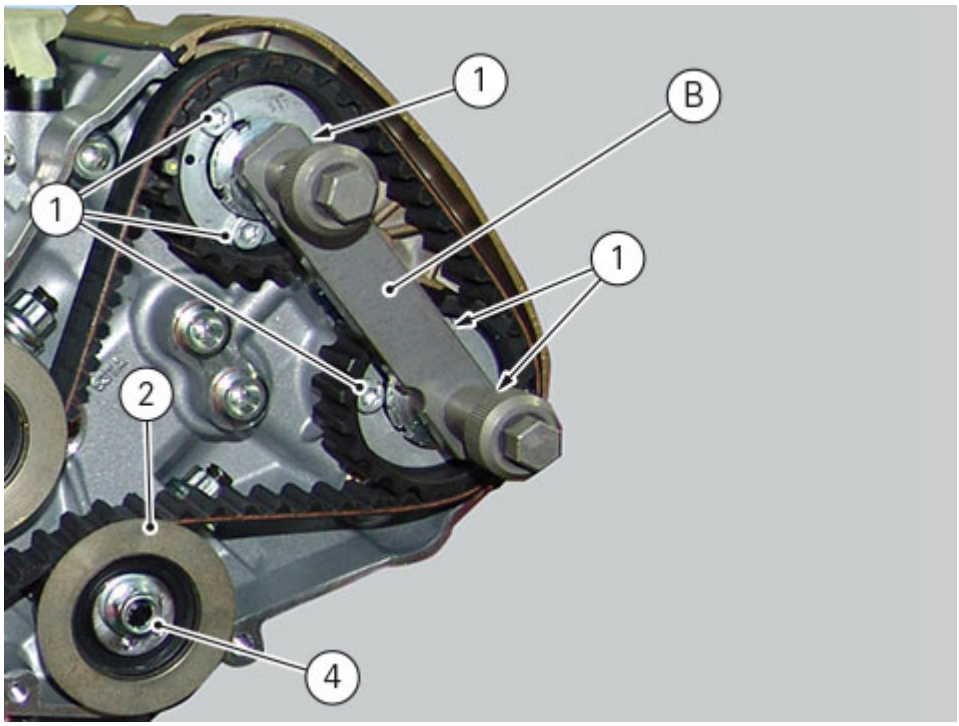

Remove the horizontal head camshaft blocking tool (B) no. **88765.1623** .

Refit the timing belt covers (Refitting the timing belt external covers).
Refit the vertical head central exhaust pipe (Refitting the exhaust system).
Refit the secondary air unit (Refitting the secondary air system).
Refit the fuel tank (Refitting the fuel tank).
Refit the seat (Refitting the seat).

Refitting the cylinder heads pulleys/idler pulleys

Check that the seat (A) on the end of the camshafts is in good condition and without burrs.

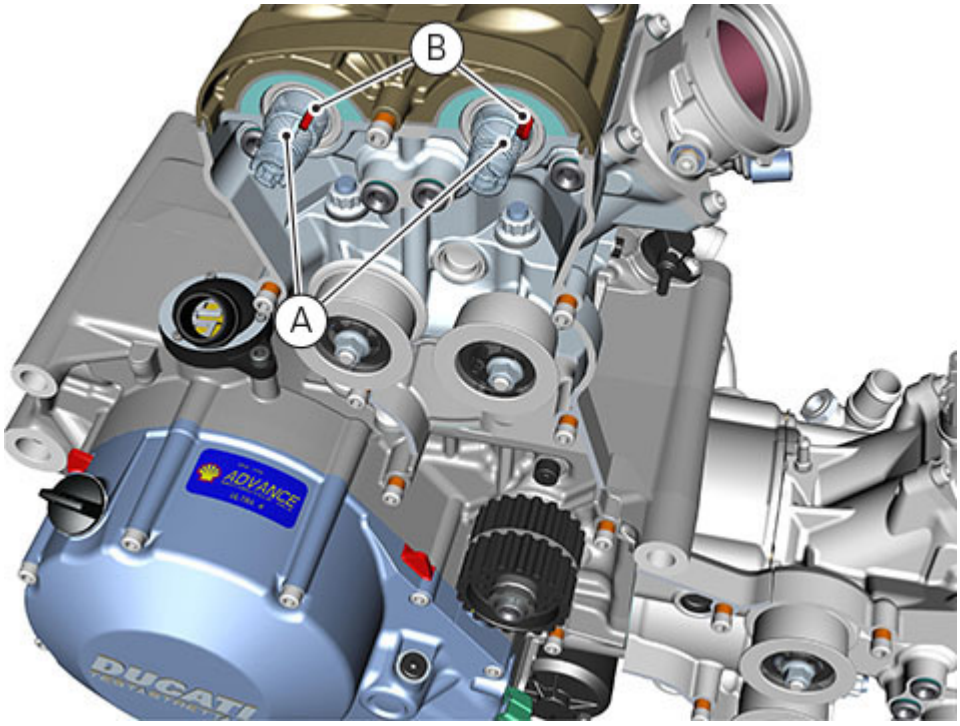

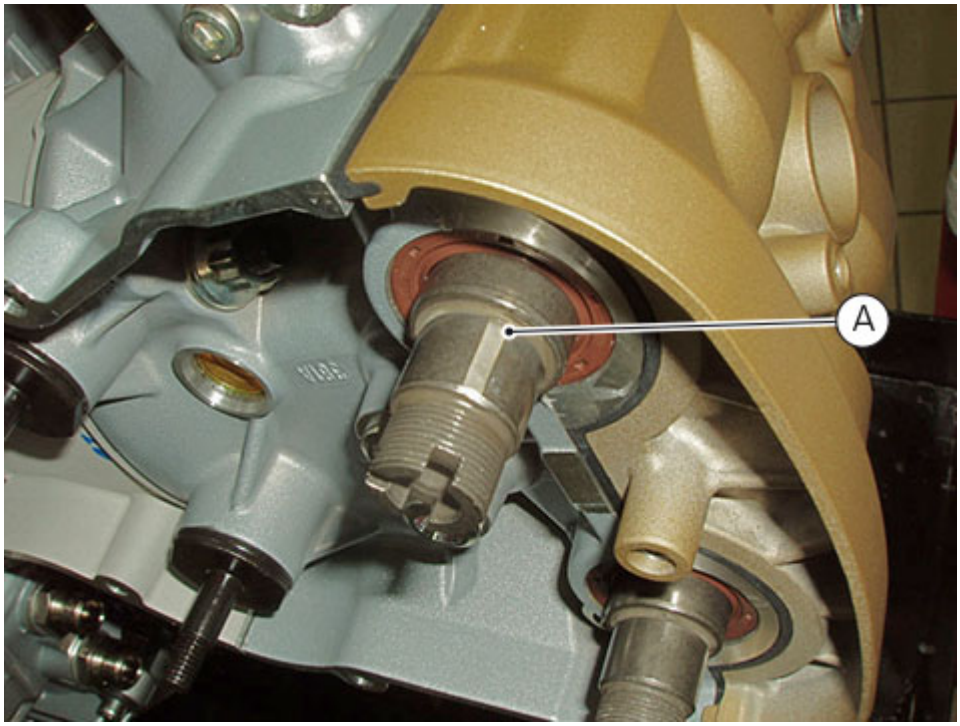

Fit a key (B) in the keyway of each camshaft.

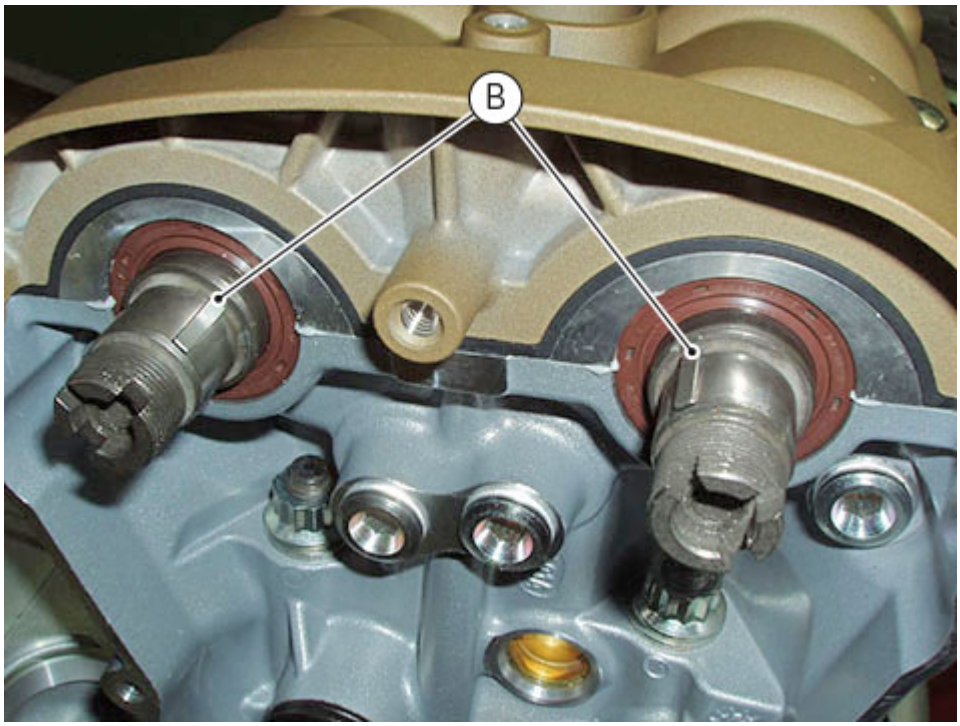

Fit the pulley (2) on the camshaft, inserting the key in the in the pulley slot (C).
Apply the recommended grease to the threads of the camshaft.
Repeat the procedure on the other camshaft.

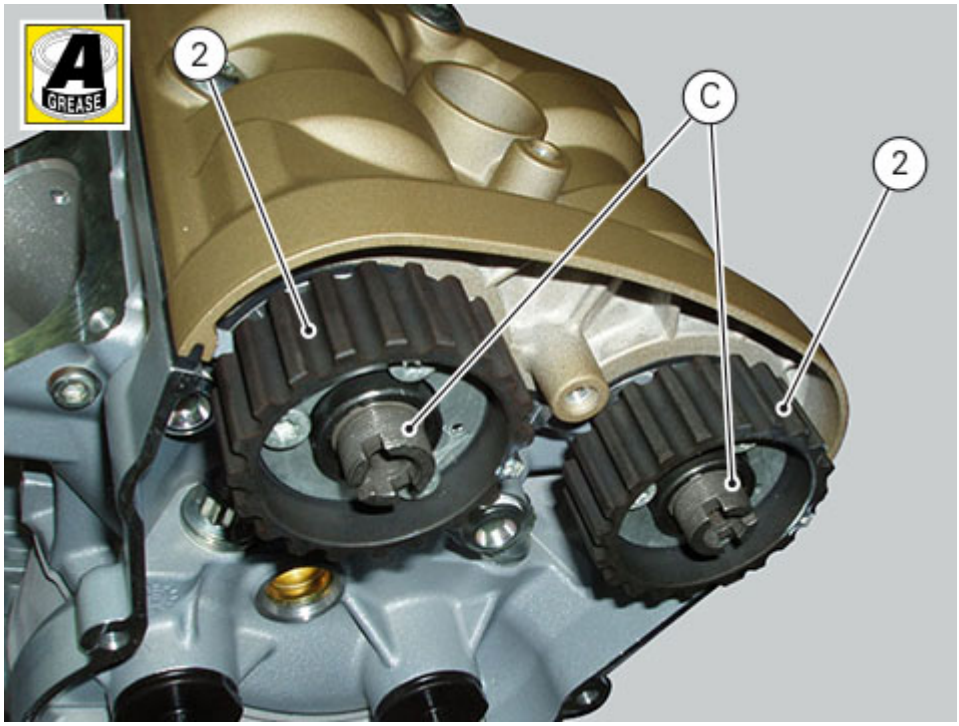

Insert tool (D) no. **88713.1806** in the belt rollers to prevent them from rotating.
Apply the recommended grease to the mating face of the ring nut (1).
Fit the ring nut (1).
Carry out the same operations on the other camshaft.

Important
Always fit new nuts on reassembly.

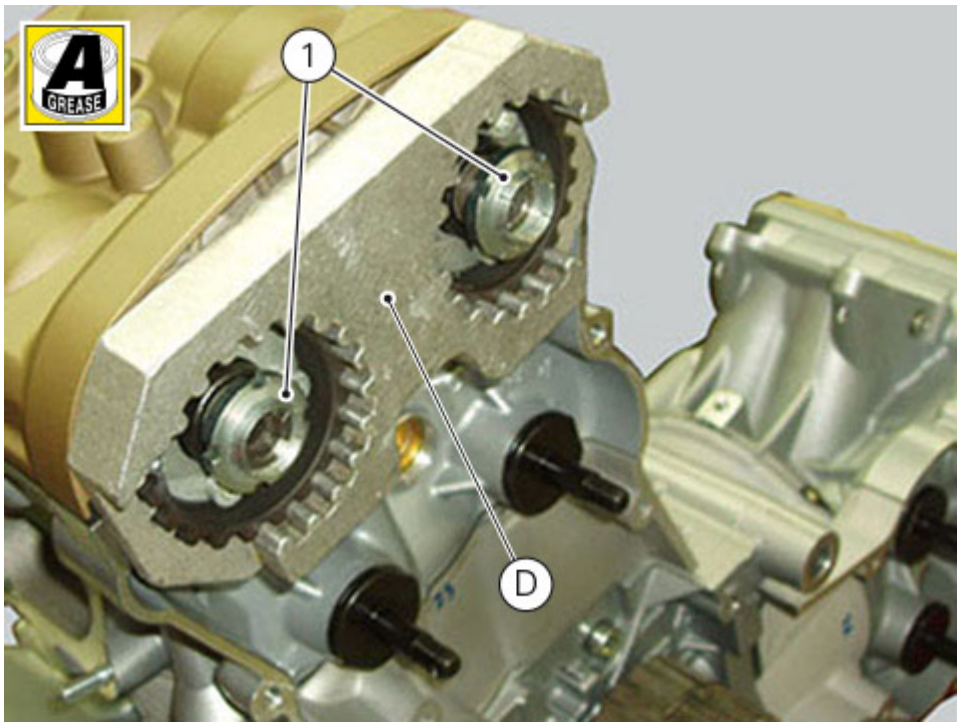

Use the bush supplied with tool no. **88713.1806**, and a torque wrench to tighten ring nuts (1) to 71 Nm (Min. 64 Nm - Max. 78 Nm).

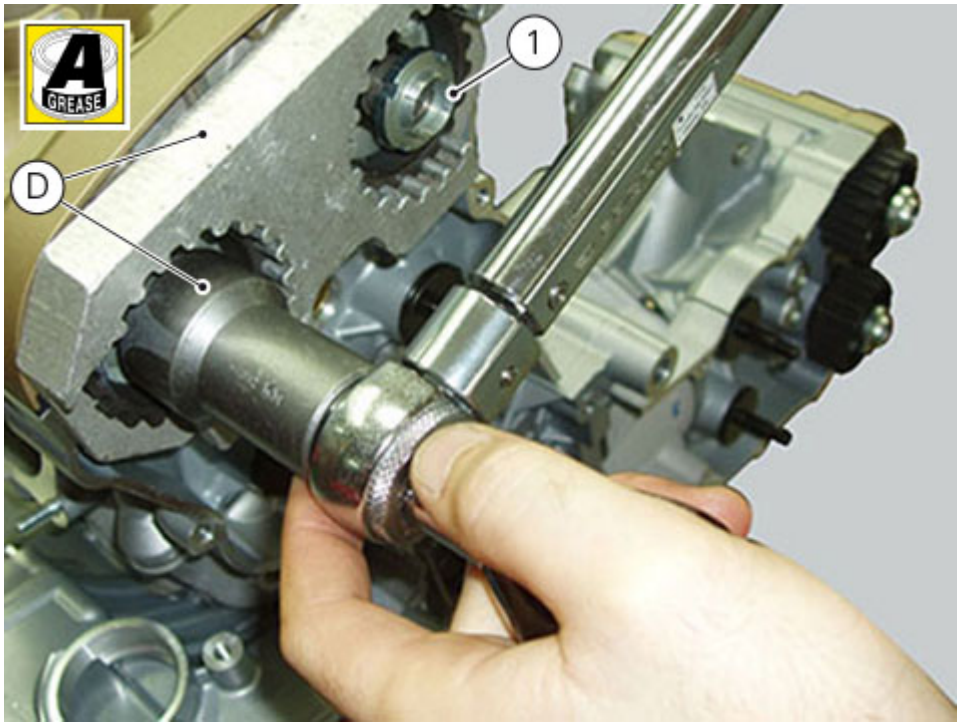

Insert the fixed tensioners (5) with relevant bearing and washers (4), in the head pins and tighten nuts (3) to a torque of 25 Nm (Min. 22 Nm - Max. 28 Nm).

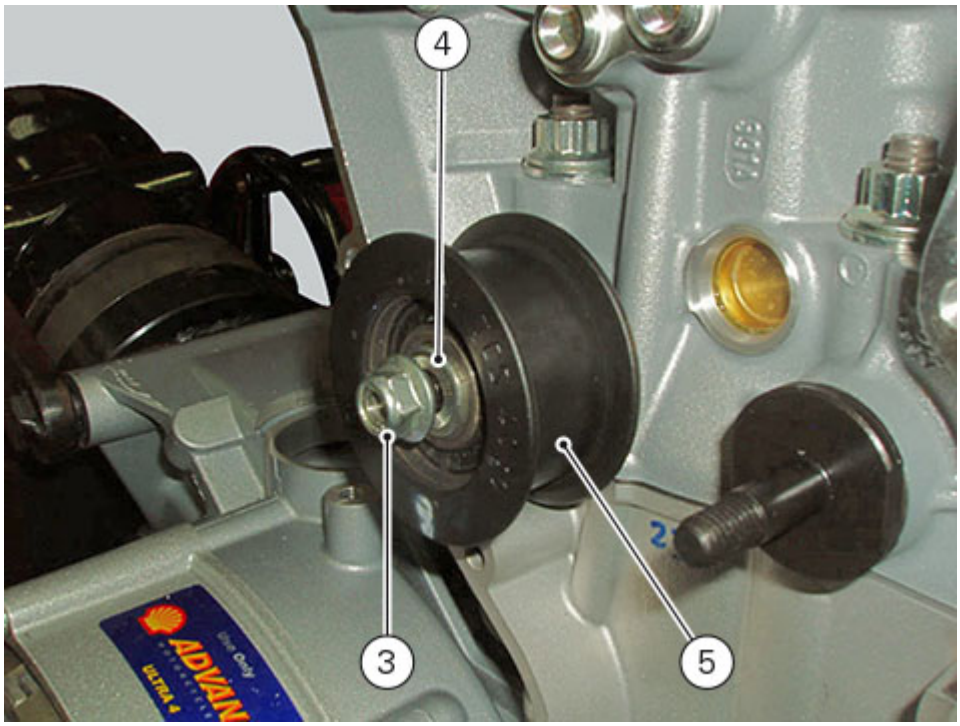

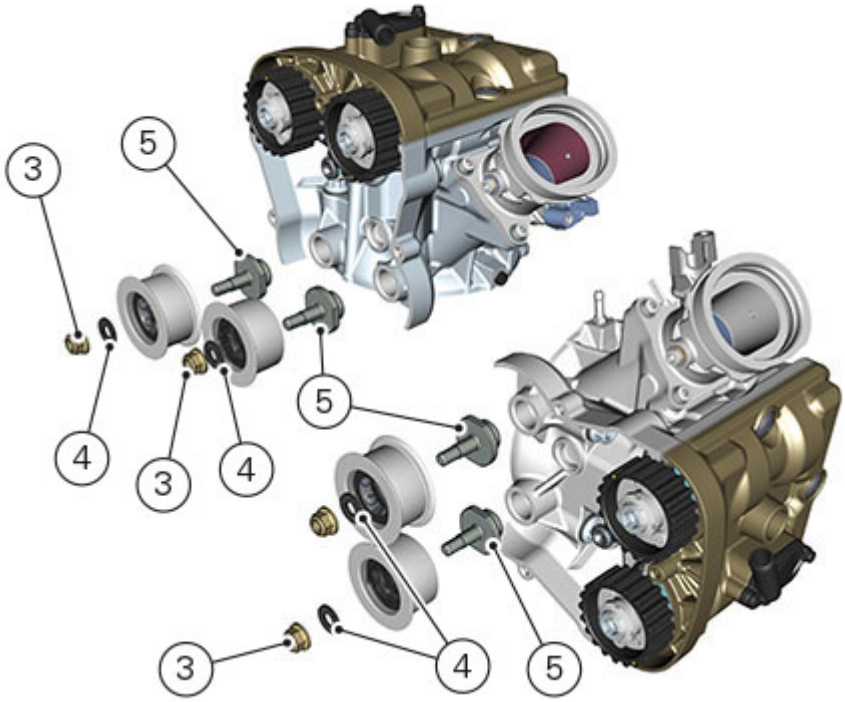

Undo the locking screws (6) of the pulleys, by turning them counter clockwise by 90° ± 5°.
Check that the pulleys have no end float and can rotate freely at all points along the full length of the slots.

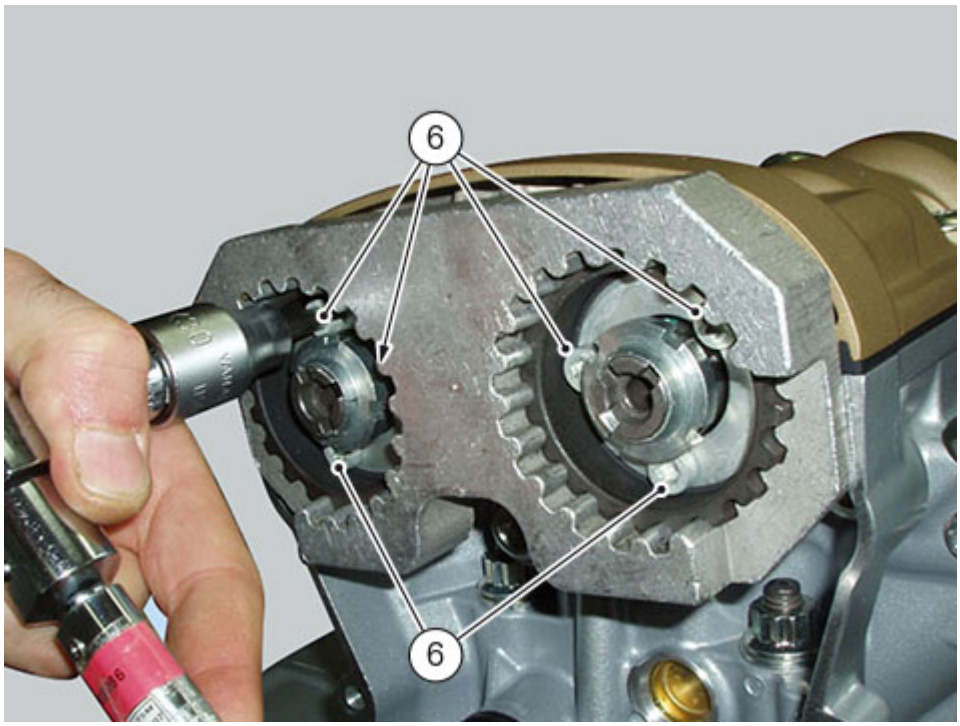

Refit the mobile tensioners and the timing belts (Refitting the timing belts).
Refit the timing belt covers (Refitting the timing belt external covers).
Refit the vertical head central exhaust pipe (Refitting the exhaust system).
Refit the secondary air unit (Refitting the secondary air system).
Refit the fuel tank (Refitting the fuel tank).
Refit the seat (Refitting the seat).

Reassembling the timing pulleys

Fit the pulley (3) on the flange (4), aligning the timing pulley mark (D) with the flange timing mark (E).
Install the washer (2) up against the pulley, aligning the timing notch (F) with the pulley (D) and flange (E) timing marks.
Insert the three screws (1) in the threaded holes (G) of the flange.
Tighten the screws (1) to a torque of 10 Nm (Min. 9 Nm - Max. 11 Nm).

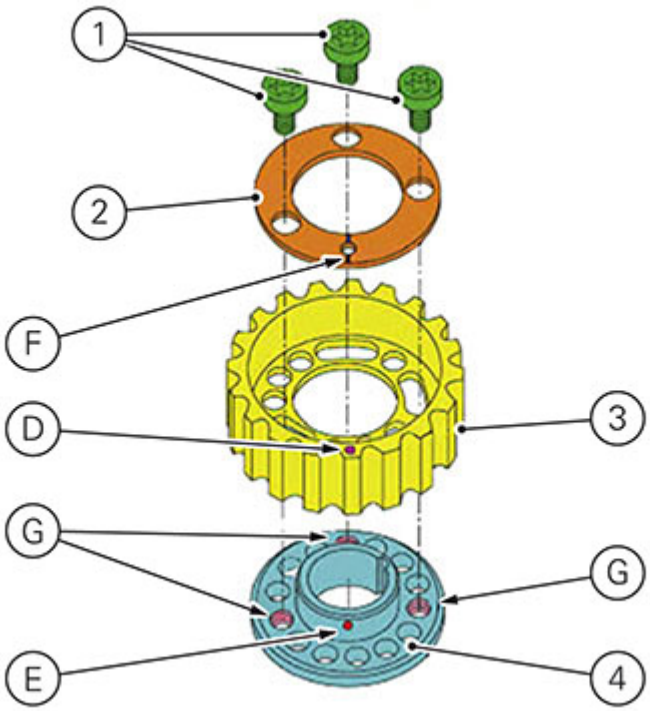

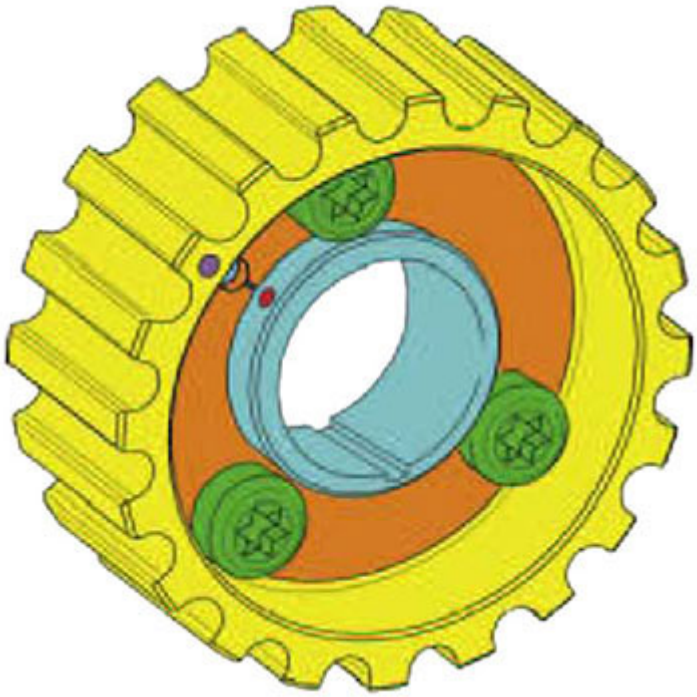

Refit the timing belts (Refitting the timing belts).
Refit the timing belt covers (Refitting the timing belt external covers).
Refit the vertical head exhaust heat guard cover (Refitting the exhaust system).
Refit the secondary air unit (Refitting the secondary air system).
Refit the fuel tank (Refitting the fuel tank).
Refit the seat (Refitting the seat).

Refitting the tensioner pins

Apply the recommended threadlocker to the pin thread.
Insert the tensioner pins (1) on the heads and tighten them with tool (A) no. **88713.1821**.
Tighten the tensioner pins to a torque of 50 Nm (Min. 45 Nm - Max. 55 Nm).

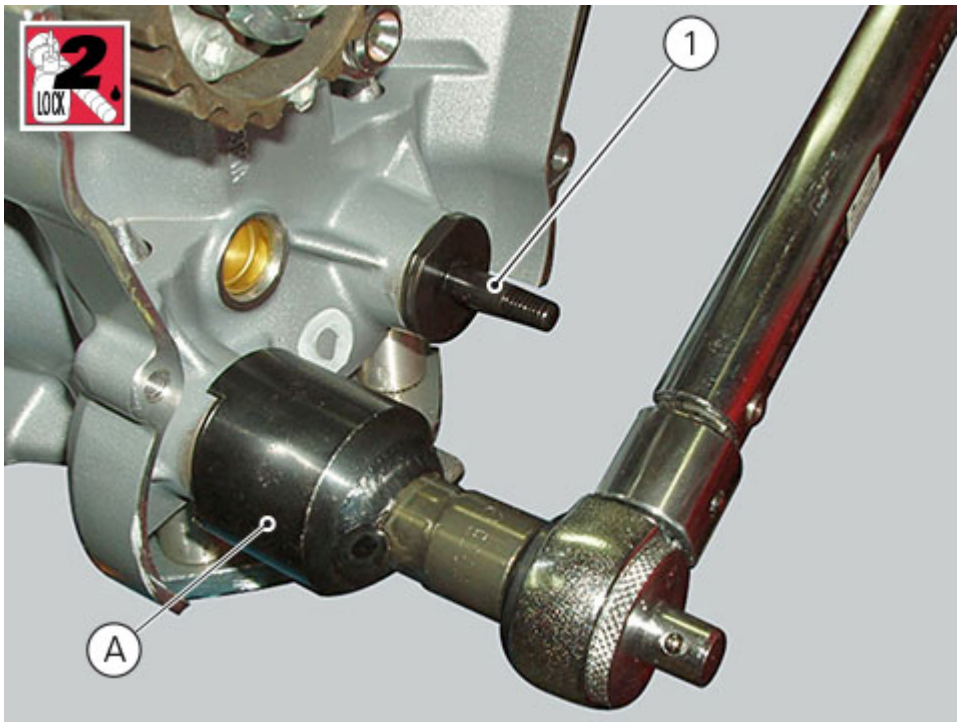

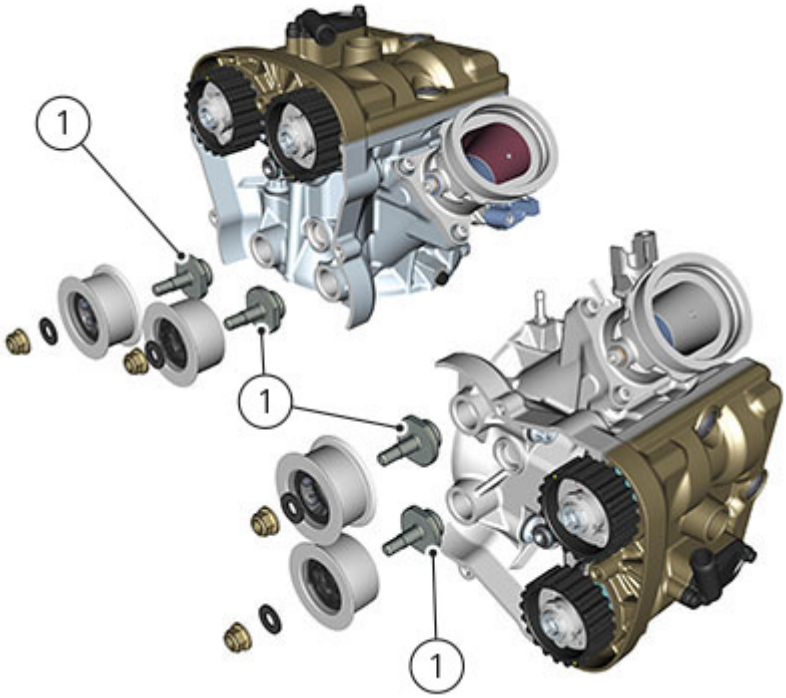

Refit the timing belts (Refitting the timing belts).
Refit the timing belt covers (Refitting the timing belt external covers).
Refit the vertical head exhaust heat guard cover (Refitting the exhaust system).
Refit the secondary air unit (Refitting the secondary air system).
Refit the fuel tank (Refitting the fuel tank).
Refit the seat (Refitting the seat).

Refitting the timing layshaft pulley

To fit the snap ring (7) in the timing layshaft seat, use the tool no. **88713.2834**.

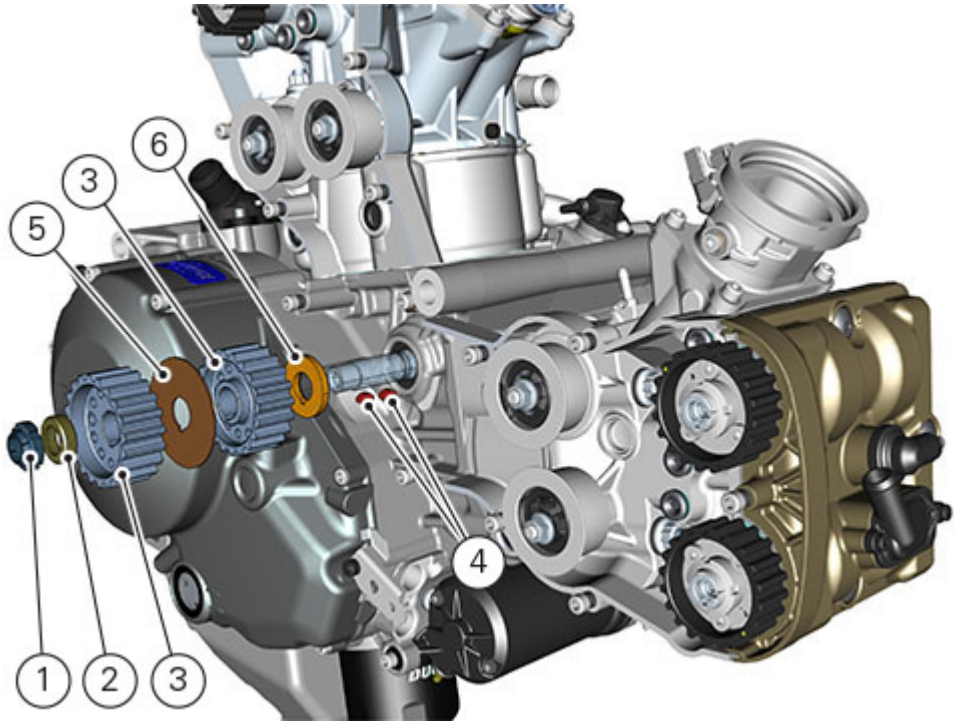

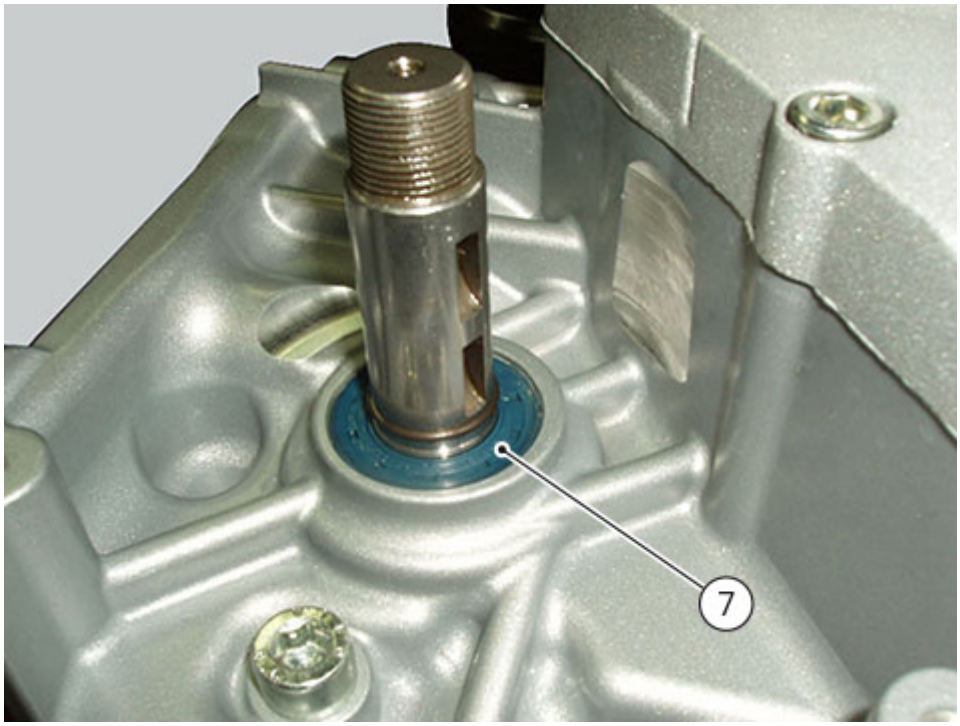

Install the inner spacer (6) on the timing layshaft, taking care to match the key notch.

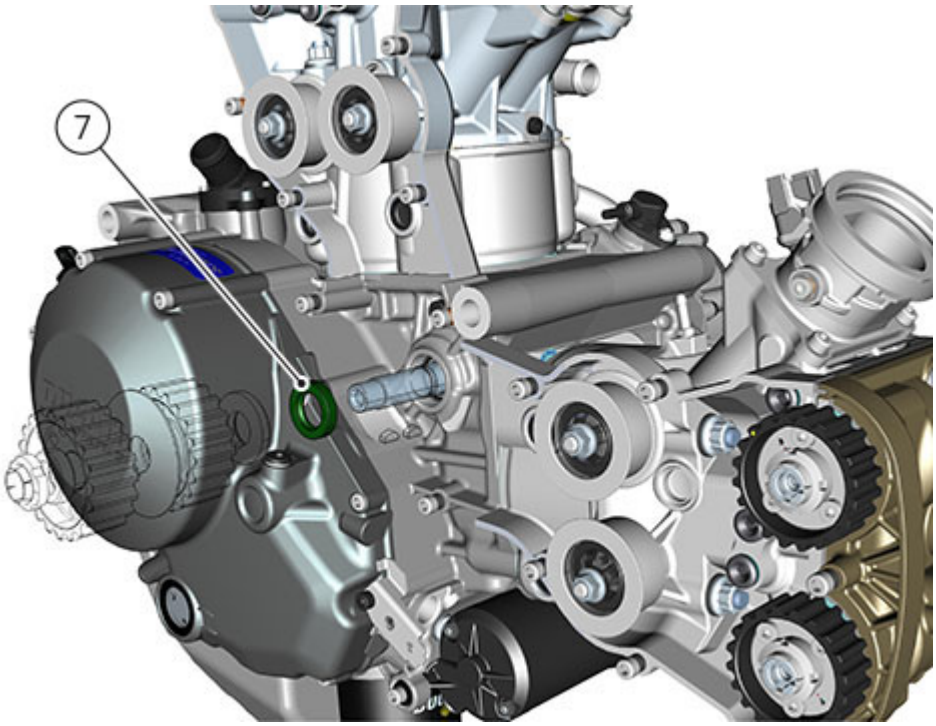

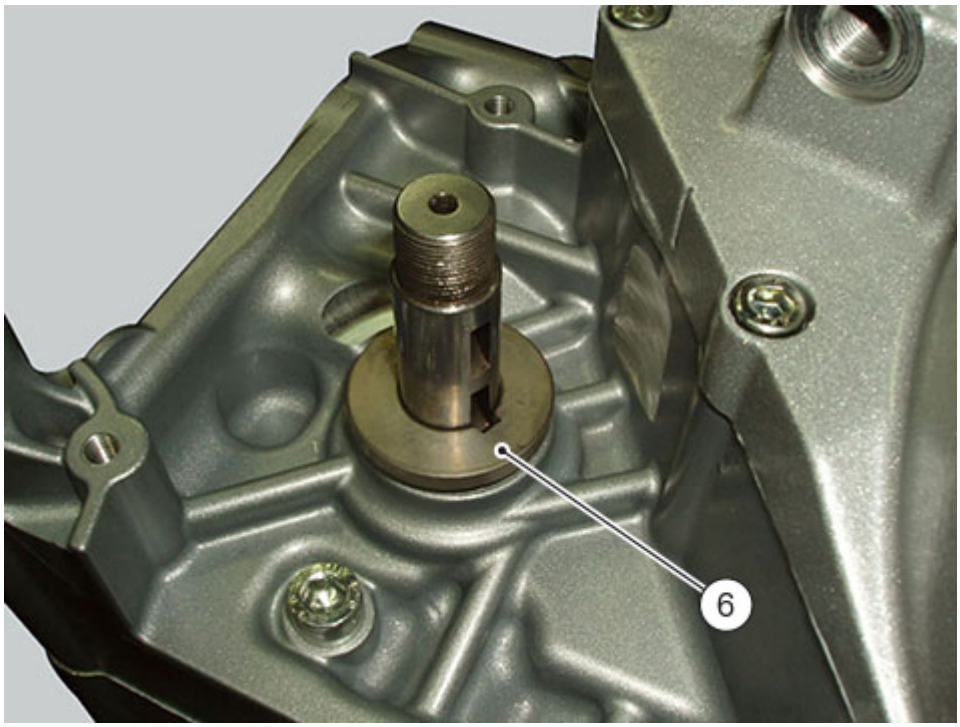

Fit the first key (4) on the timing layshaft.

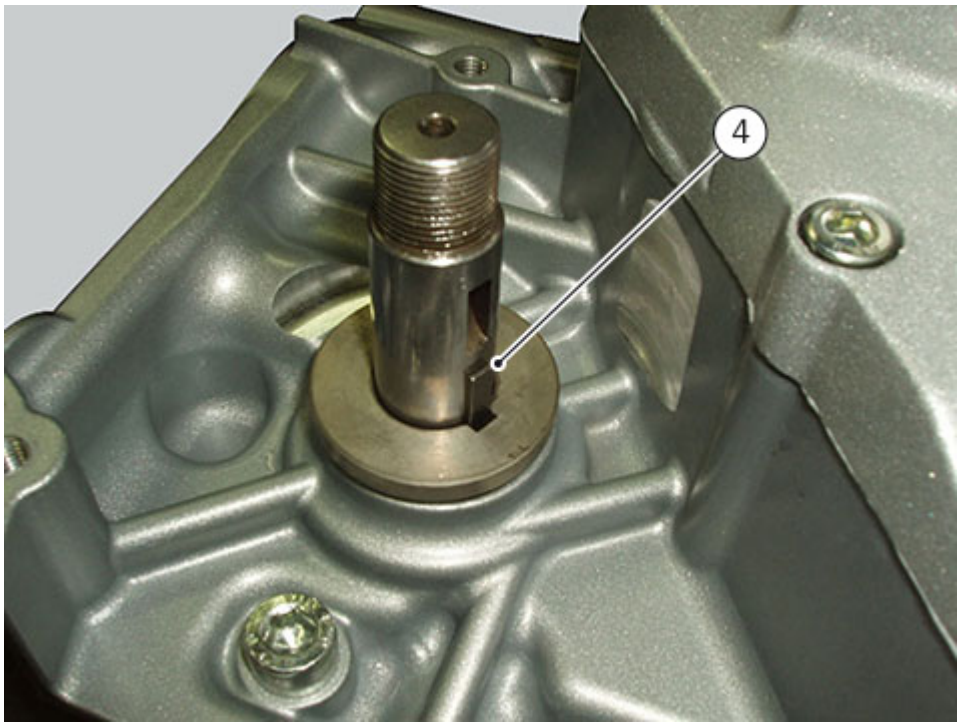

Locate the inner pulley (3).

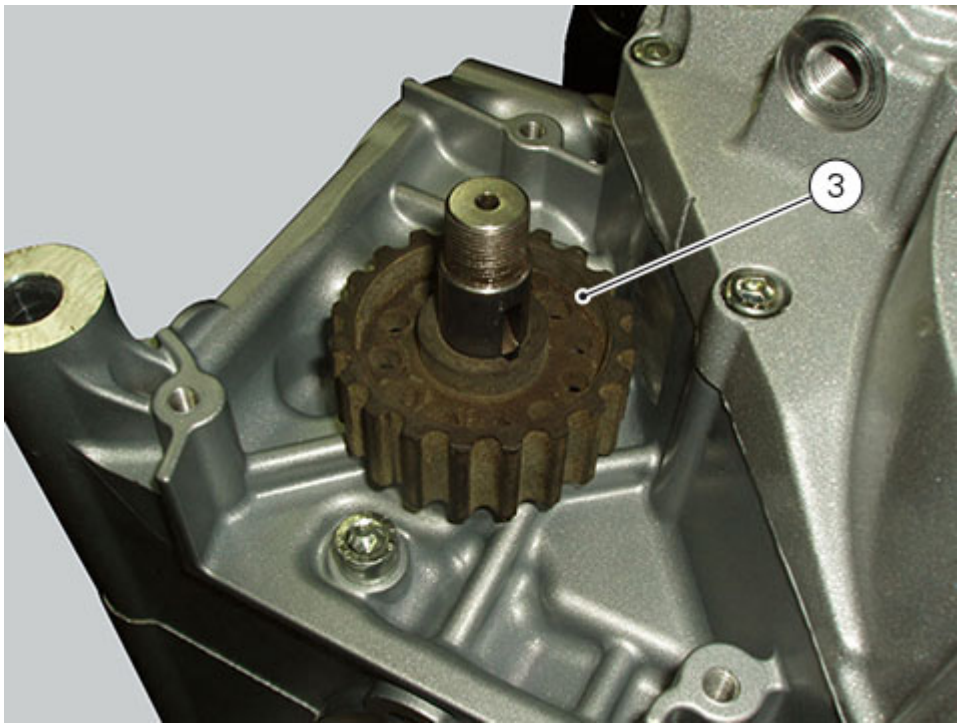

Refit the second key (4) and the washer (5).

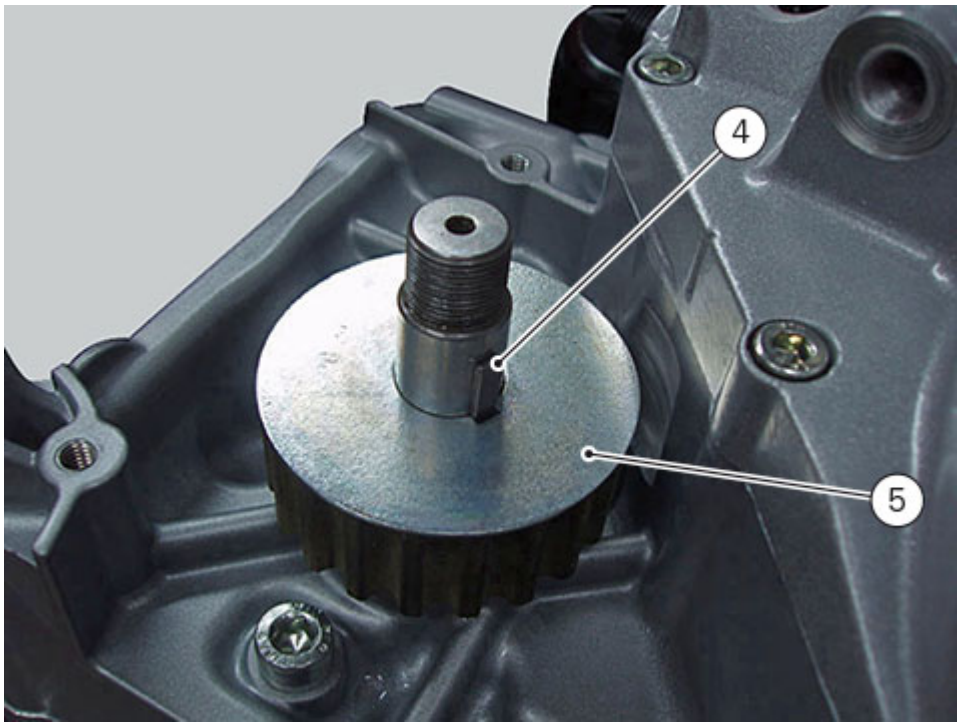

Locate the outer pulley (3) and the spacer (2).
Apply the recommended grease to the threads of the shaft.

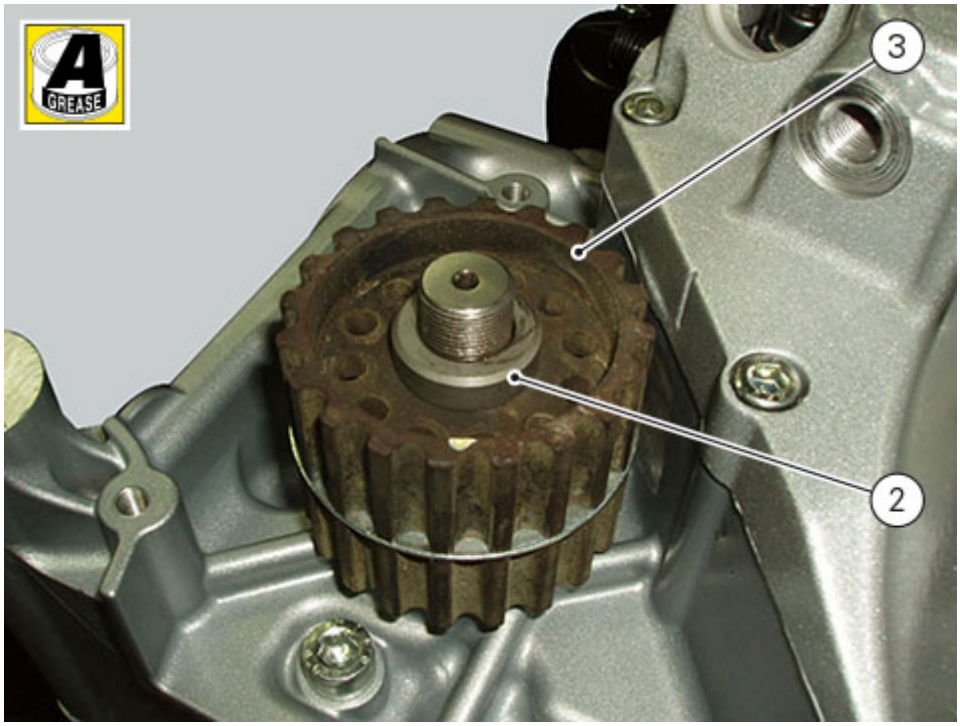

Fit the ring nut (1).

Important
To prevent the ring nuts from loosening and consequent serious engine damage, always use new self-locking ring nuts on all the timing belt rollers.

Block with tool (A) no. **88713.1805** the rotation of the belt rollers and tighten to 71 Nm (Min. 64 Nm - Max. 78 Nm) the self-locking ring nut using the insert supplied with the wrench and a torque wrench.

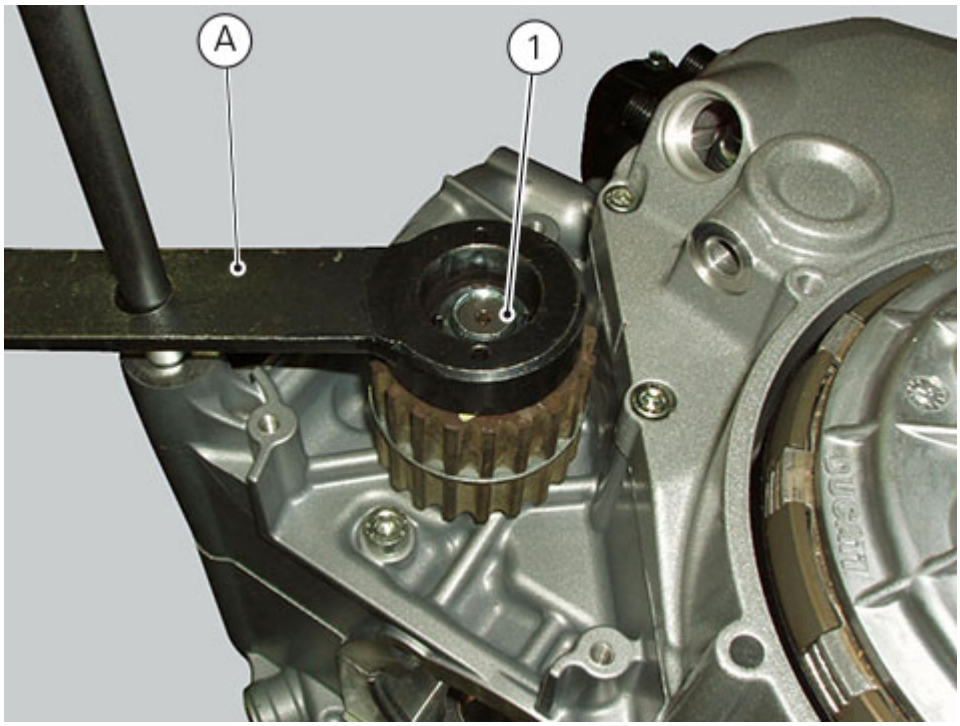

Refit the timing belts (Refitting the timing belts).
Refit the timing belt covers (Refitting the timing belt external covers).
Refit the vertical head exhaust heat guard cover (Refitting the exhaust system).
Refit the secondary air unit (Refitting the secondary air system).
Refit the fuel tank (Refitting the fuel tank).
Refit the seat (Refitting the seat).

Removing the timing layshaft pulleys

Remove the seat (Removing the seat).
Remove the fuel tank (Removing the fuel tank).
Disconnect the secondary air unit (Removing the secondary air system).
Remove the vertical head central exhaust pipe (Removing the exhaust system).
Remove the timing belt covers (Removing the timing belt external covers).
Remove the mobile tensioner/timing belt (Removing the mobile tensioner/timing belt).
Remove the cylinder head pulley/fixed tensioner (Removing the cylinder head pulley/fixed tensioner).

Block with tool no. **88713.1805** the rotation of the driving belt rollers on the crankcase.

If this operation is carried out with the engine installed in the frame, hold the driving pulleys against rotation using tool (A) no. **88713.2011** mounted on the generator cover.

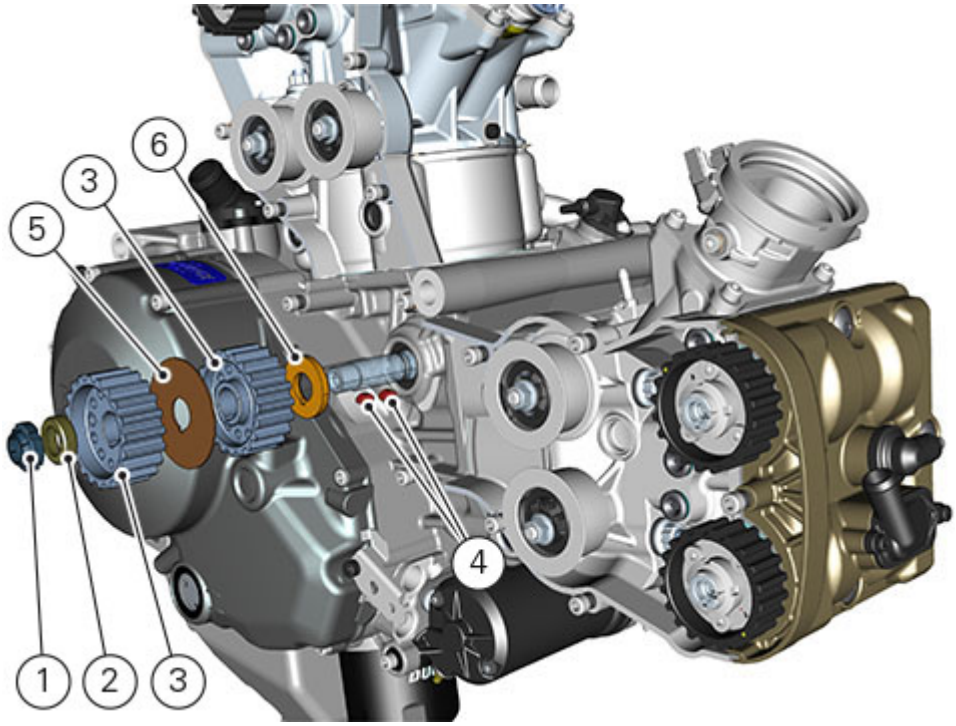

Loosen the ring nut (1) using the socket supplied with the tool.

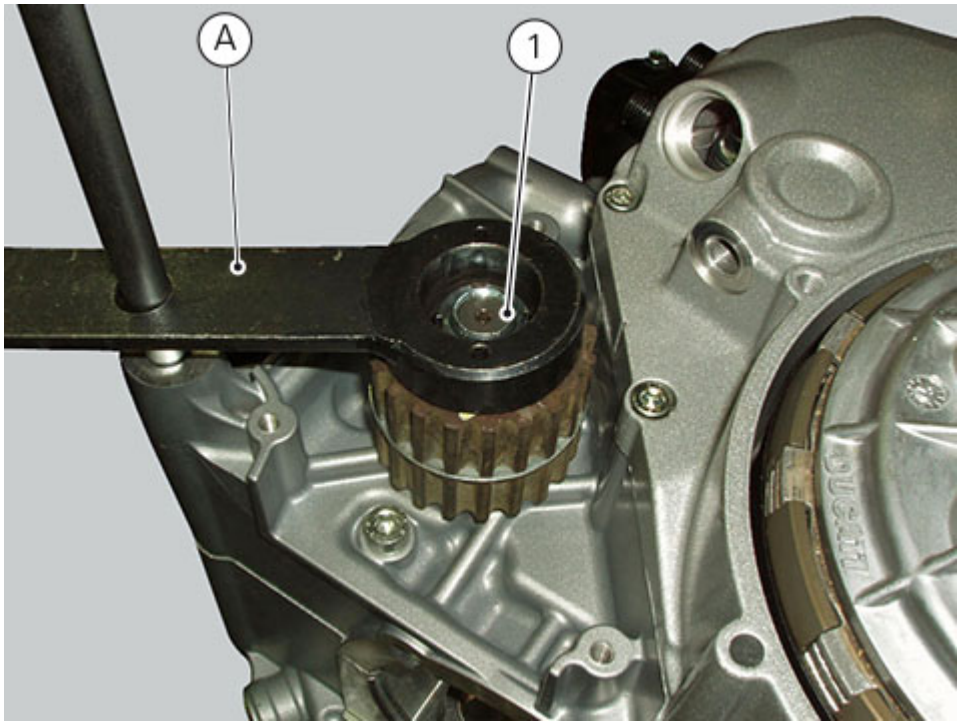

Remove the ring nut (1), the spacer (2) and the outer pulley (3).

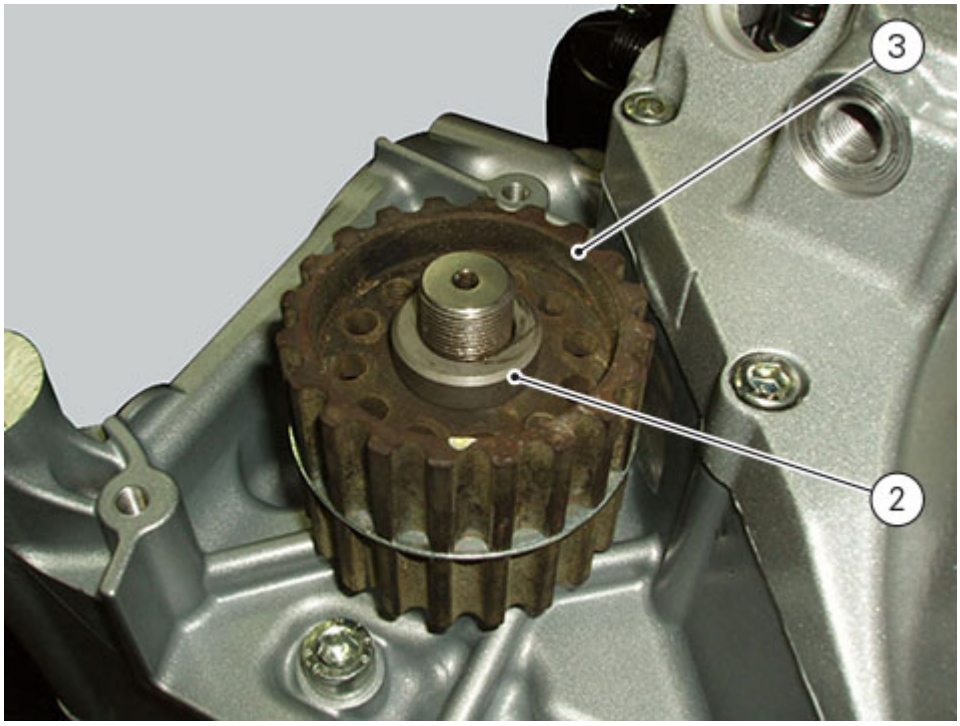

Remove the first key (4) from the timing layshaft.
Remove the spacer (5) and the inner pulley (3).

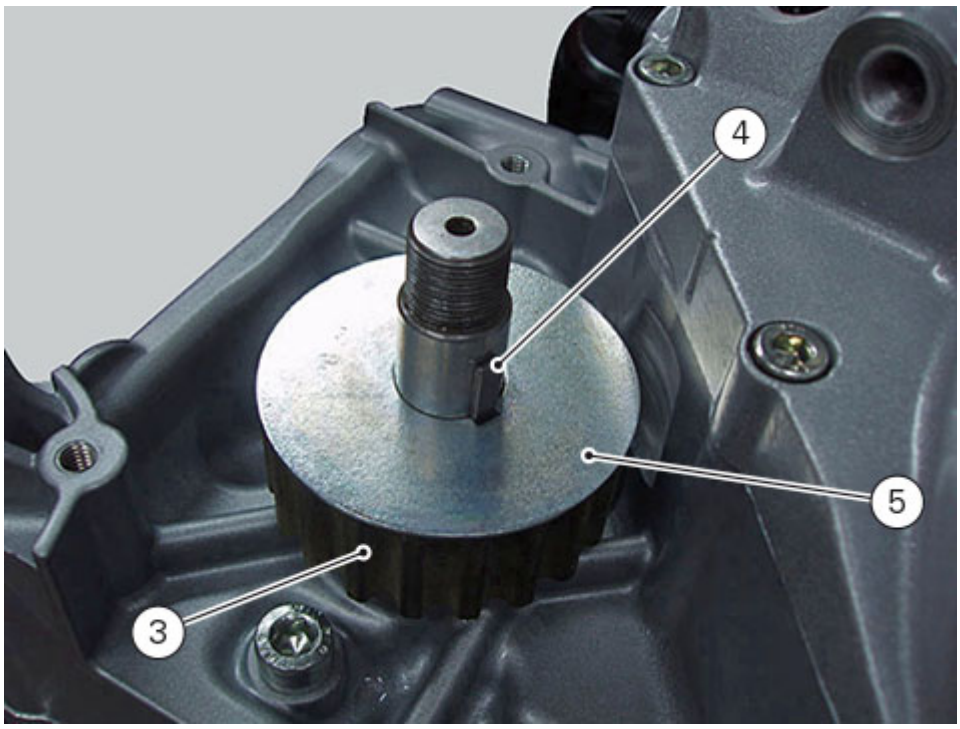

Remove the inner spacer (6) and second key (4) on the timing layshaft.

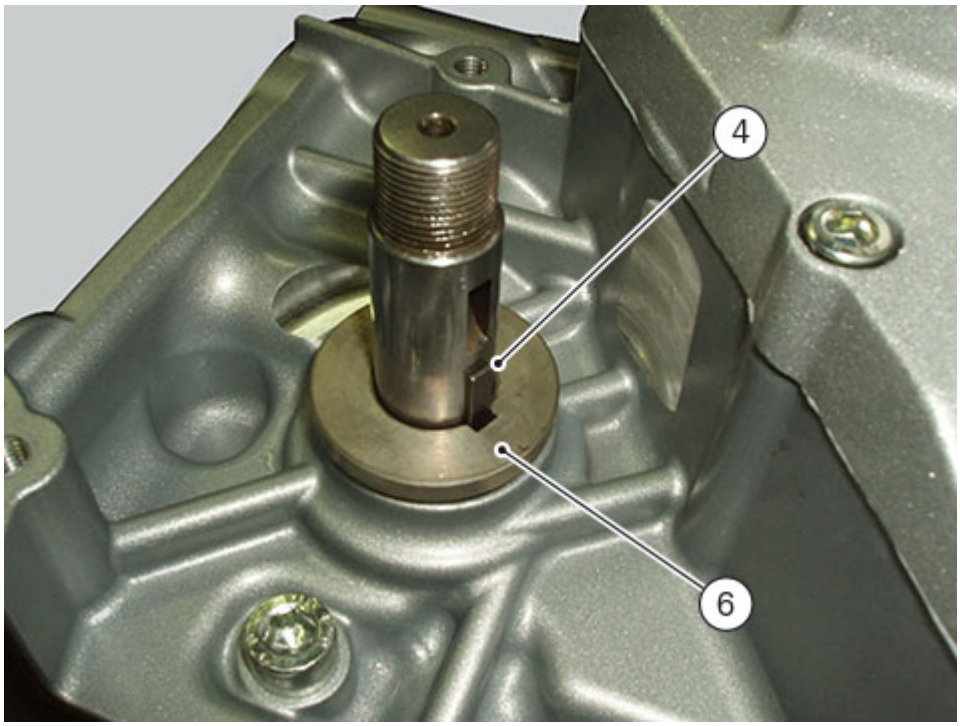

It is now possible to remove the snap ring (7) on the timing layshaft.

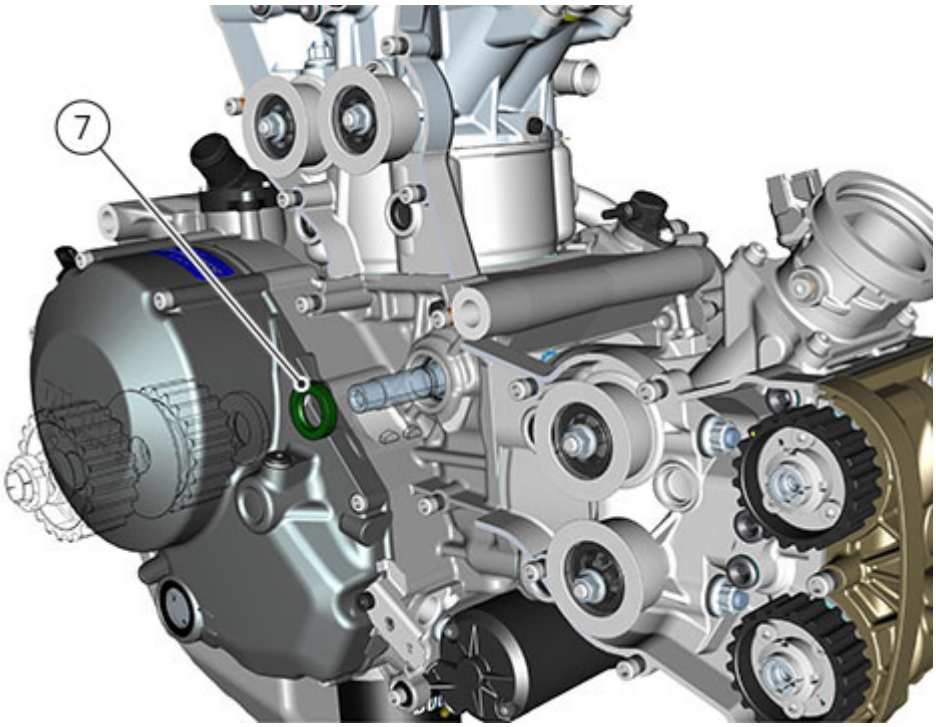

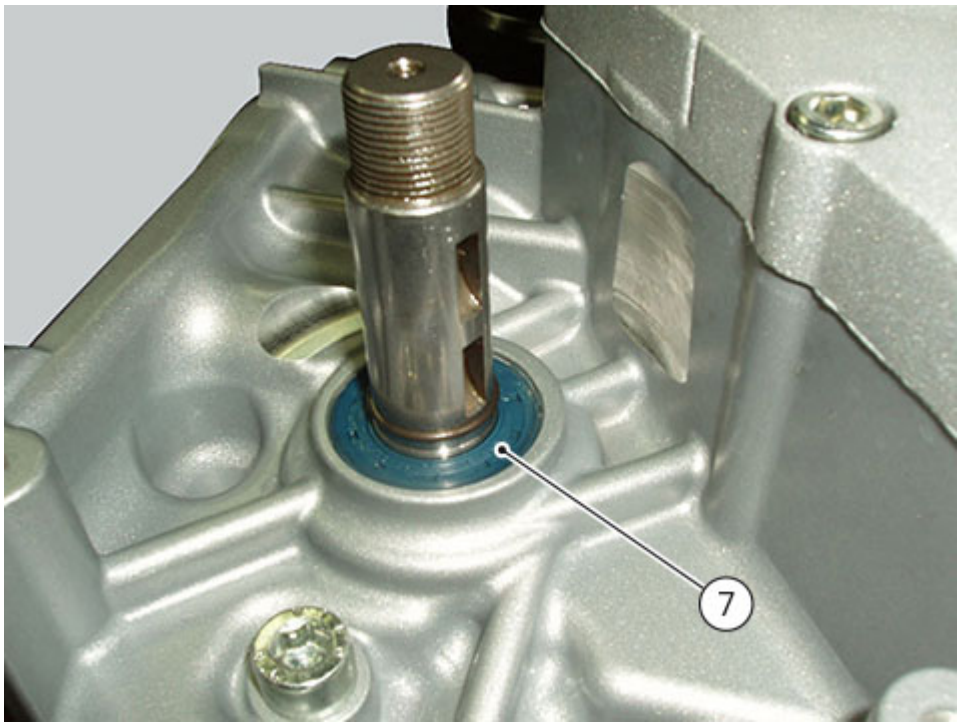
7

Disassembling the camshaft pulleys

Remove the seat (Removing the seat).
Remove the fuel tank (Removing the fuel tank).
Disconnect the secondary air unit (Removing the secondary air system).
Remove the vertical head central exhaust pipe (Removing the exhaust system).
Remove the timing belt covers (Removing the timing belt external covers).
Remove the mobile tensioner/timing belt (Removing the mobile tensioner/timing belt).
Remove the cylinder head pulley/fixed tensioner (Removing the cylinder head pulley/fixed tensioner).

Undo and remove the screws (1).
Slide off the washer (2).
Withdraw the camshaft pulley (3) from the spacer flange (4).

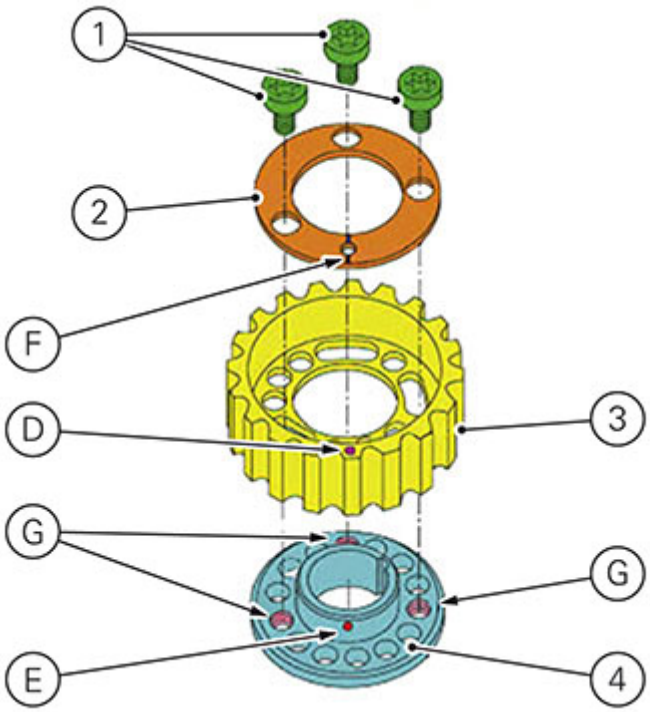

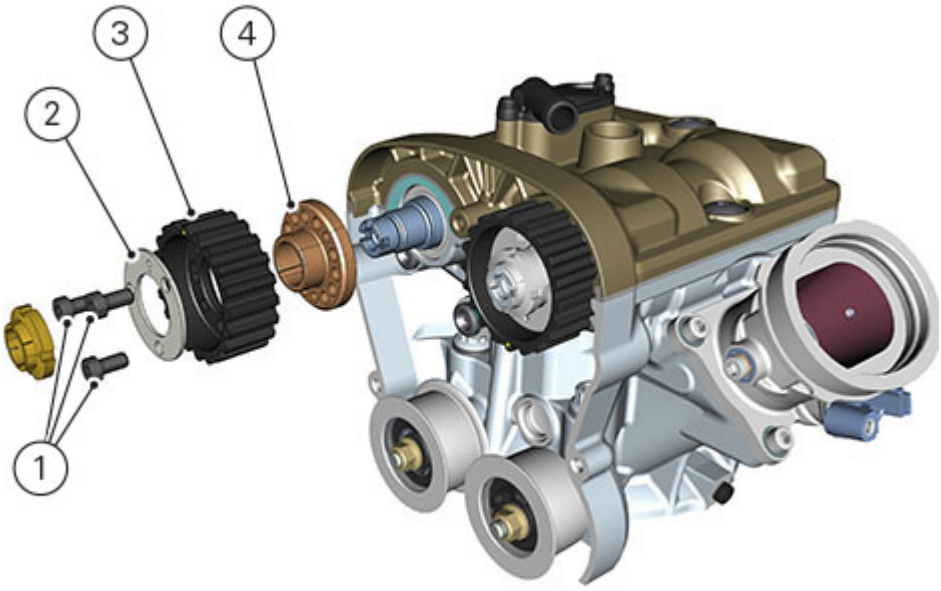

Removing the tensioner pins

Remove the seat (Removing the seat).
Disconnect the secondary air unit (Removing the secondary air system).
Remove the vertical head central exhaust pipe (Removing the exhaust system).
Remove the timing belt covers (Removing the timing belt external covers).
Remove the mobile tensioner/timing belt (Removing the mobile tensioner/timing belt).
Remove the cylinder head pulley/fixed tensioner (Removing the cylinder head pulley/fixed tensioner).

Use tool (A) no. **88713.1821** to remove tensioner pins (1) from the heads.

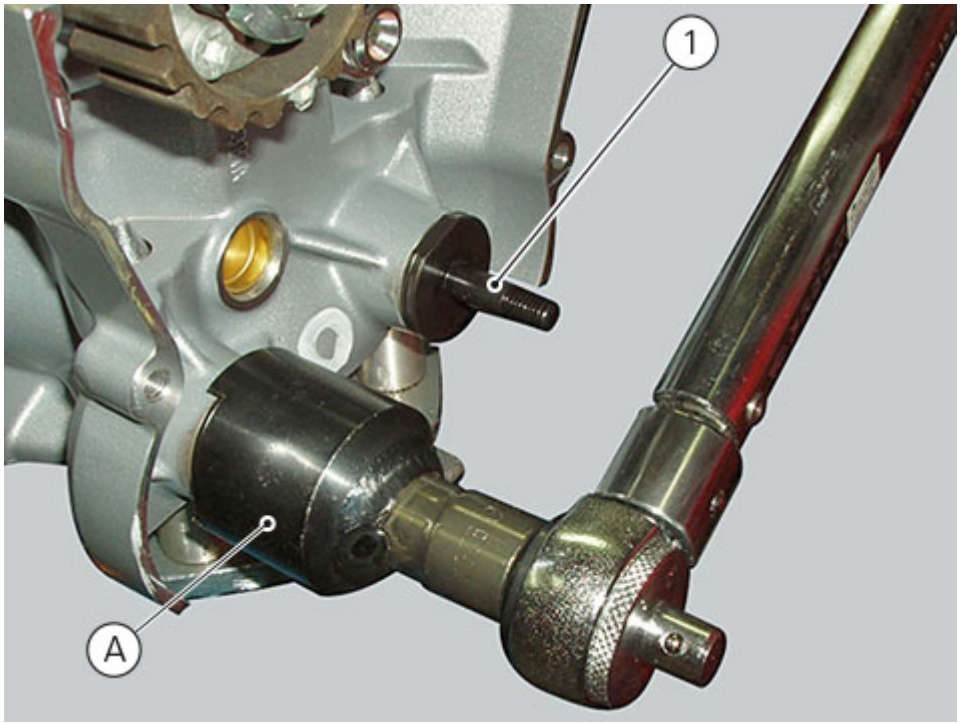

Removing the cylinder head pulley/fixed tensioner

Remove the seat (Removing the seat).
Remove the fuel tank (Removing the fuel tank).
Disconnect the secondary air unit (Removing the secondary air system).
Remove the vertical cylinder exhaust heat guard cover (Removing the exhaust system).
Remove the timing belt covers (Removing the timing belt external covers).
Remove the mobile tensioner/timing belt (Removing the mobile tensioner/timing belt).

Fit tool (A) part no. **88713.1806** in the pulleys to lock their rotation and use the supplied bush to loosen the fixing ring nuts (1) of the pulleys.

Important
Upon reassembly, always use new ring nuts.

Remove the ring nuts (1) and the pulleys (2) from the camshafts.

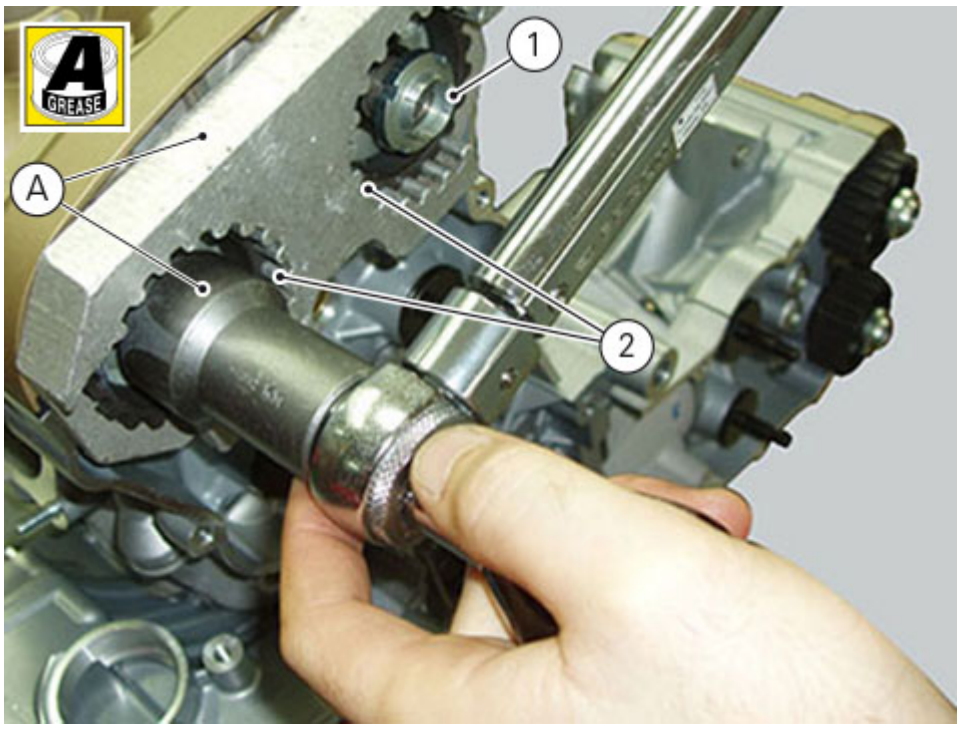

Loosen the nut (3) and remove the washer (4) and the fixed tensioner pulley (5).
Repeat the same procedure to remove the other tensioner.

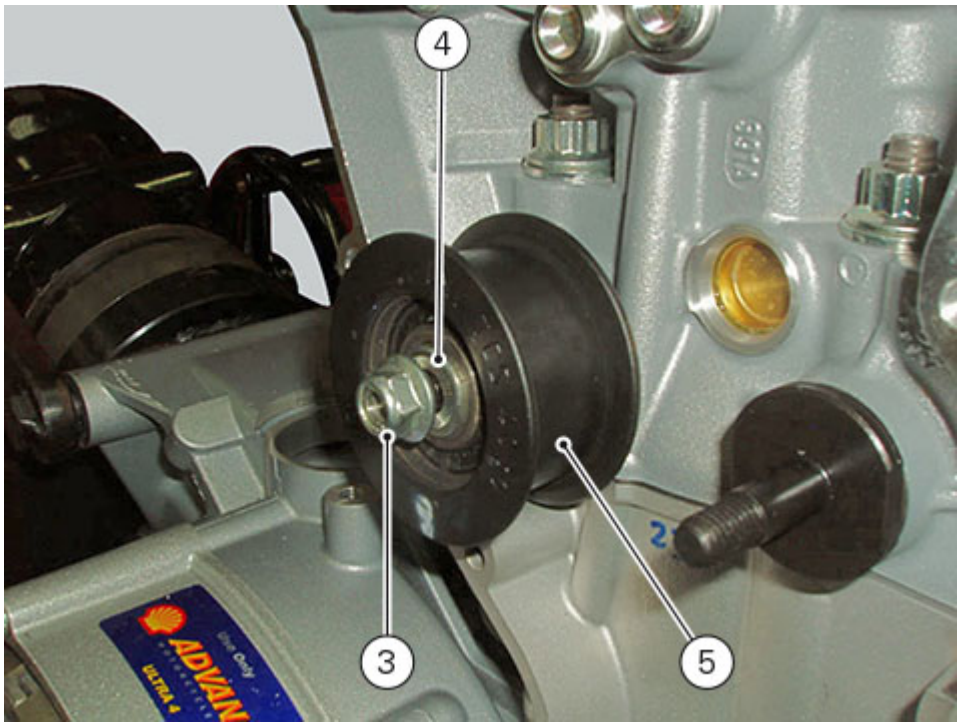
4
3
5

Removing the mobile tensioner/timing belt

Remove the seat (Removing the seat).
Remove the fuel tank (Removing the fuel tank).
Disconnect the secondary air unit (Removing the secondary air system).
Remove the vertical cylinder exhaust heat guard cover (Removing the exhaust system).
Remove the timing belt covers (Removing the timing belt external covers).

Loosen the nut (1) and remove the washer (2) and the mobile tensioner (3) from the pin (4) on the cylinder head.
Remove the timing belt (5) from the piston-cylinder assy.

Important
If the belts are to be re-used, mark the direction of rotation with an arrow and also mark the piston-cylinder assy they belong to.

Repeat the procedure for the other piston-cylinder assy.

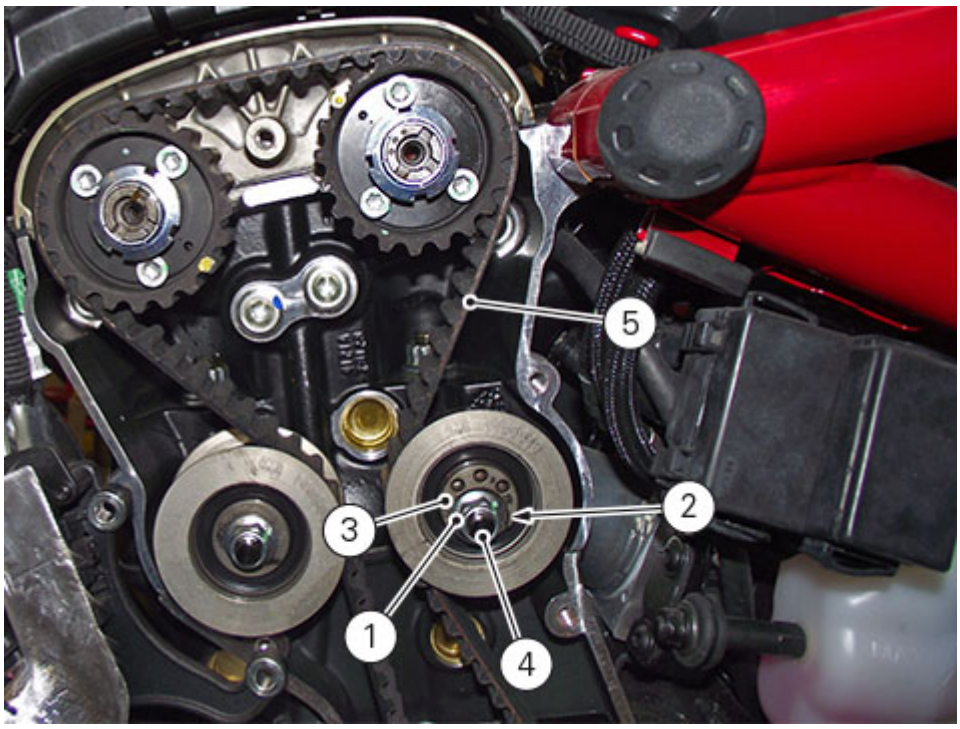

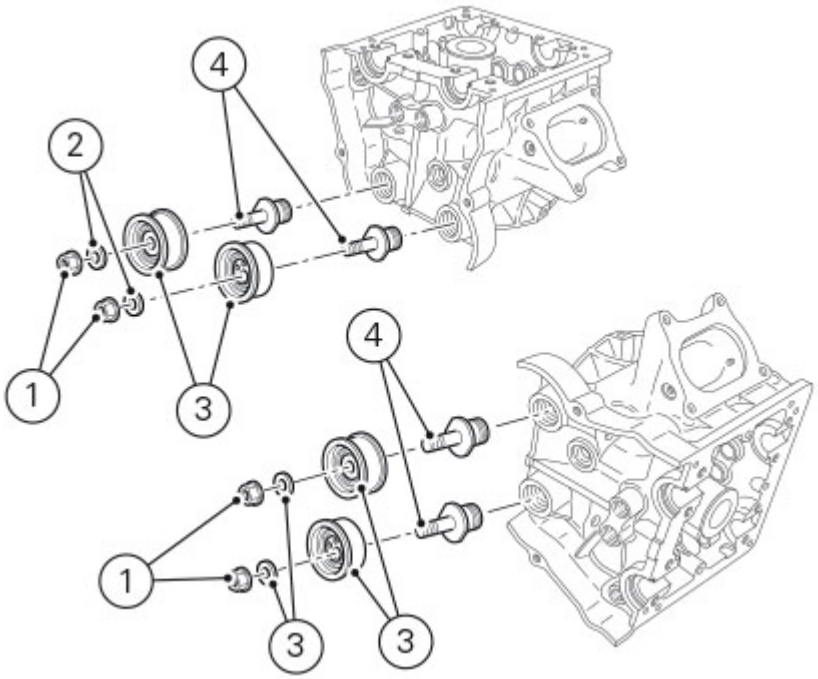

Removing the timing belt covers

Note
For clarity, the figures show the engine removed from the frame.

To work with the engine installed on the frame, first proceed as follows:

Warning
When working with installed engine, wait for the components to cool down

Remove the seat (Removing the seat).
Remove the fuel tank (Removing the fuel tank).
Disconnect the secondary air unit (Removing the secondary air system).
Remove the exhaust silencer (Removing the silencer).
Remove the exhaust system (Removing the exhaust system).

Note
Remove also any parts which may impede the procedure.

Undo the fixing screws (1) of the external cover (2) and remove it from the horizontal piston-cylinder assy.

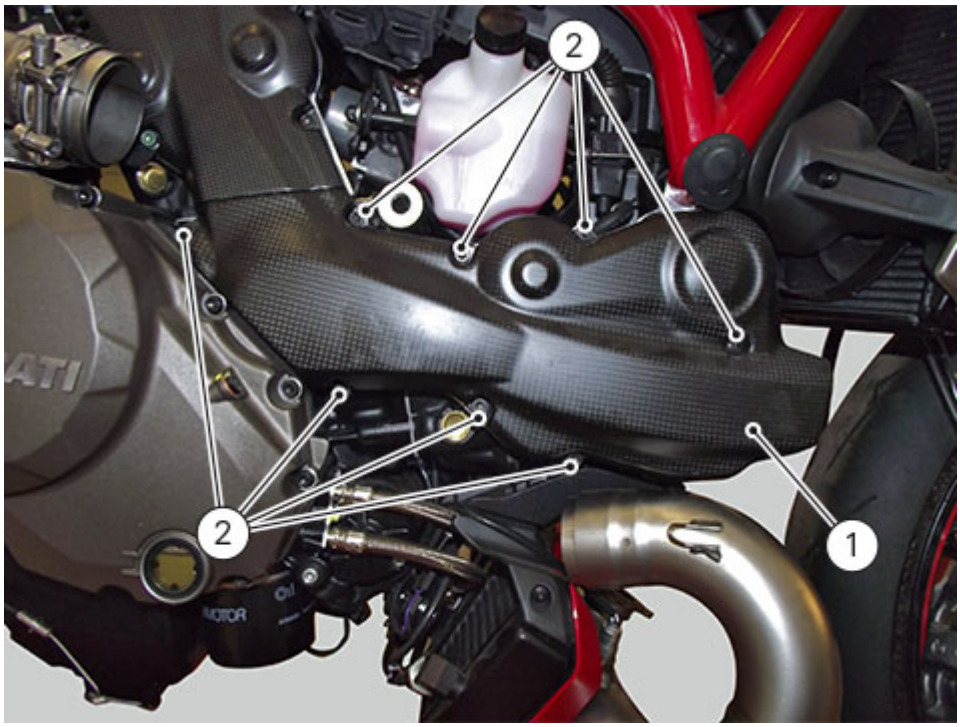

Working on piston-cylinder assy vertical outer cover (3), loosen the three screws (4) and the two screws (5), collecting the two lover spacers (6).
Remove cover (3), taking care to prise it from hose guide (7).

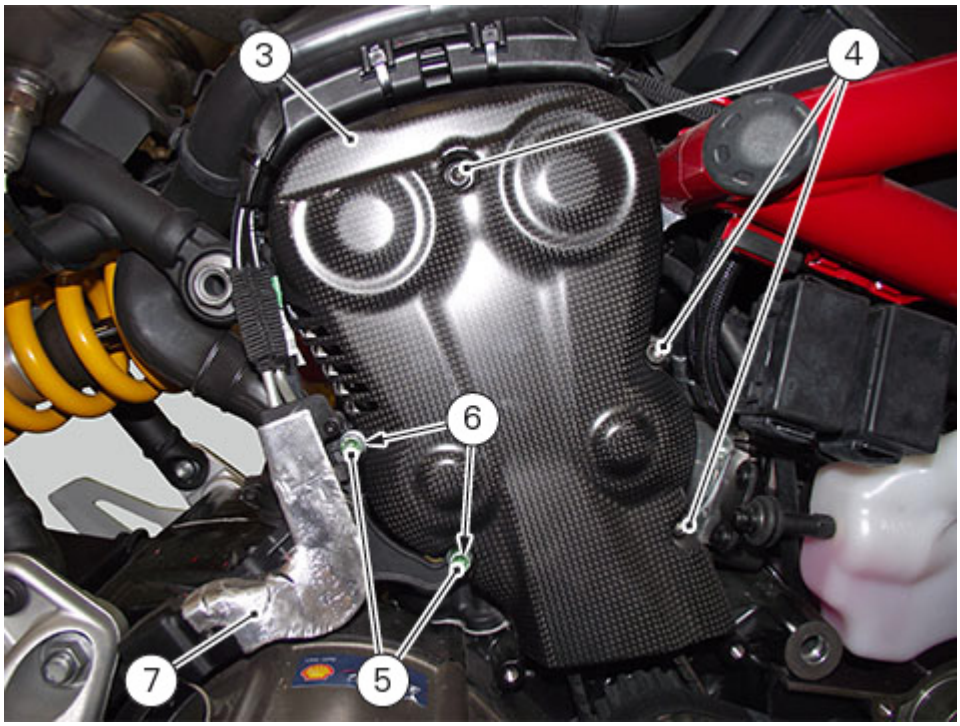
3
4
6
7
5

Refitting the intake manifold and water union

After ensuring that the matching surfaces of horizontal and vertical manifolds and heads are perfectly flat and clean, install the intake manifolds and fix them with screws (1).

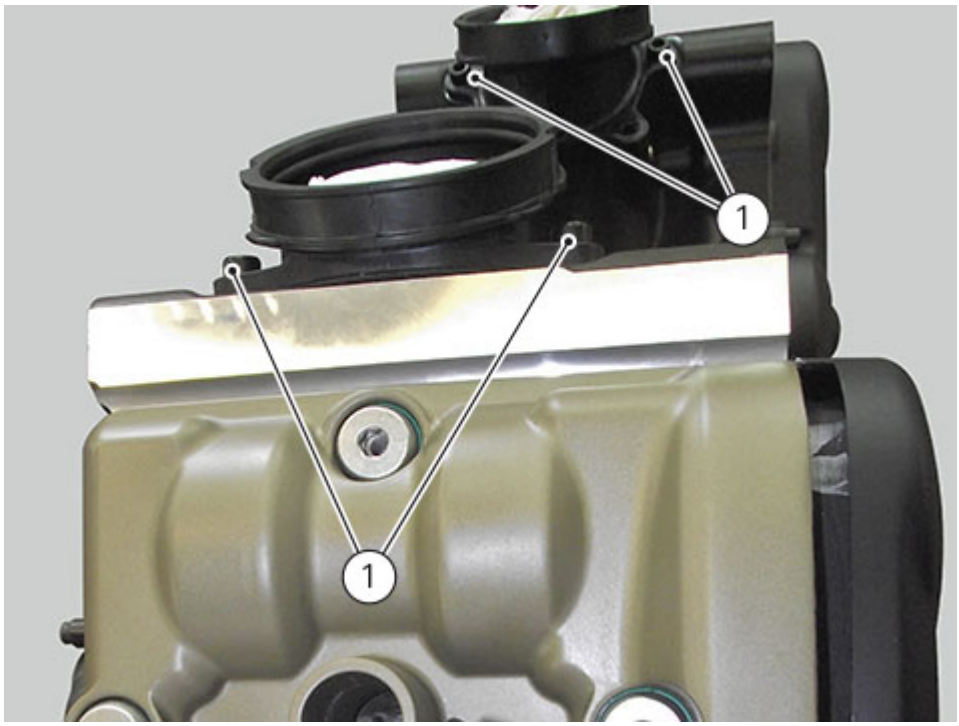

Work on the vertical head to position cable guide plate (7) and tighten screws (6) to a torque of 10 Nm ± 10%.

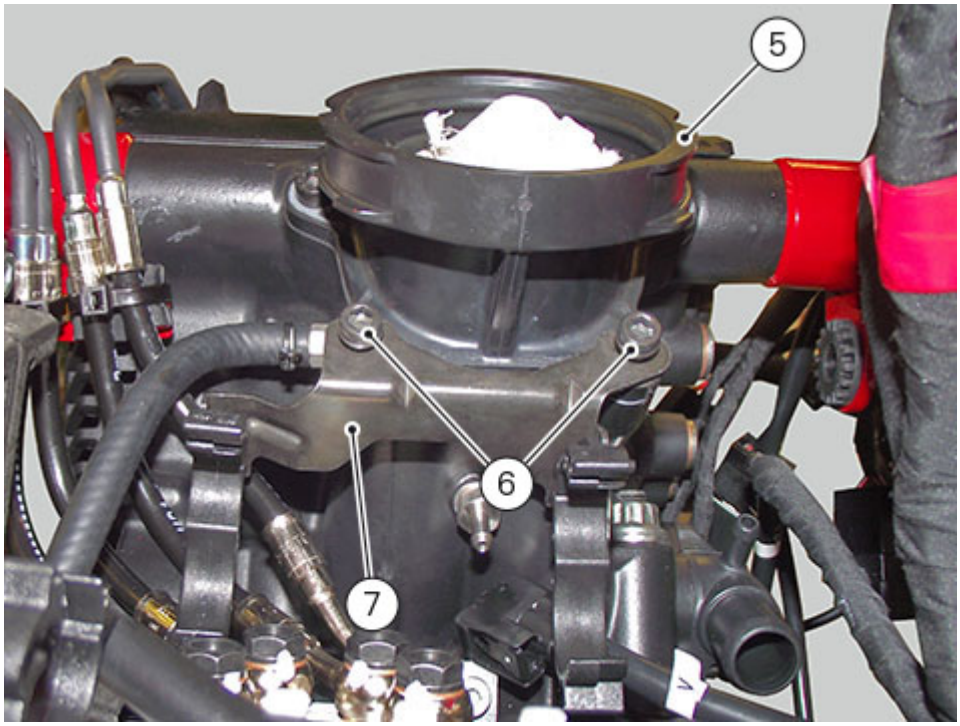

Work on the horizontal head to position expansion reservoir retaining bracket (3) and tighten screws (2) to a torque of 8 Nm ± 10%.

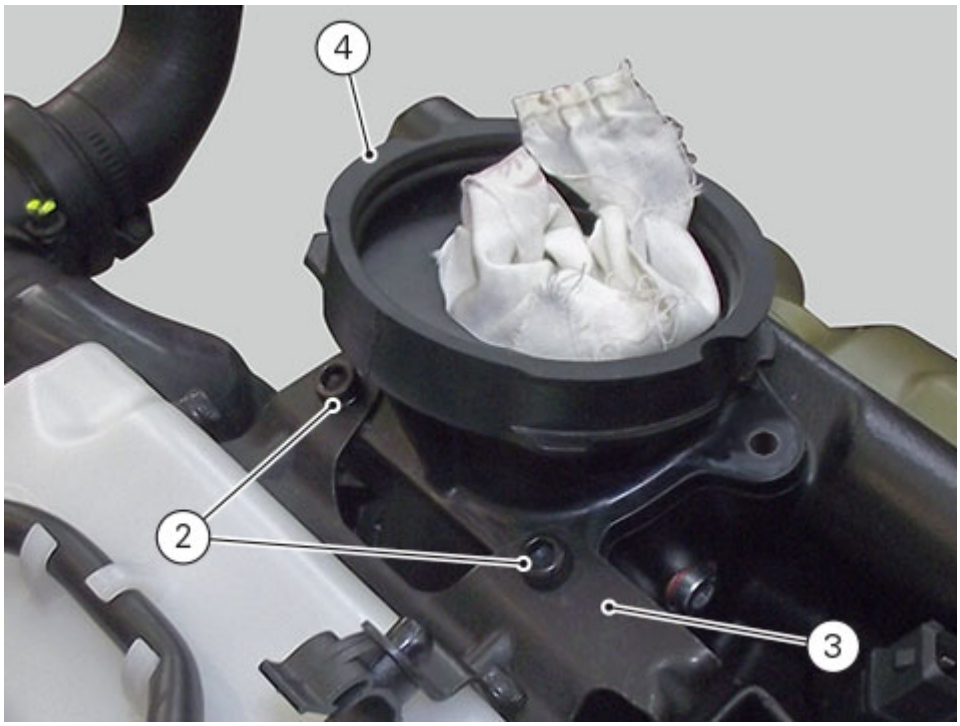

Work on both intake manifolds and tighten screws (1) to a torque of 10 Nm (Min. 9 Nm - Max. 11 Nm).

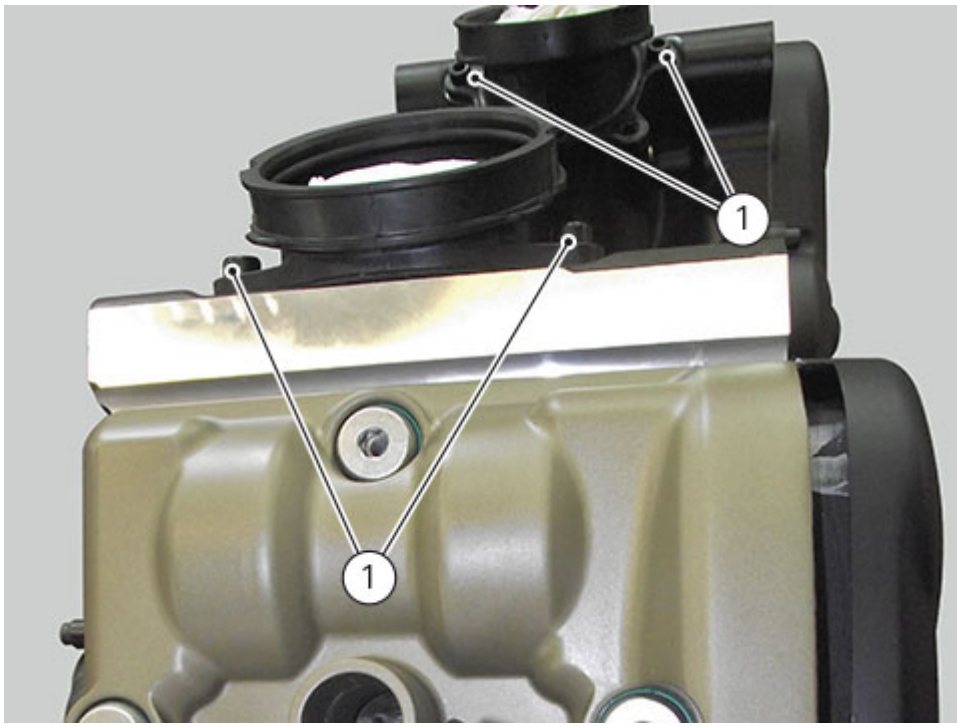

Apply specified threadlocker on the vertical head union (8).
Fit seal (9) and tighten union (8) to a torque of 2 Nm (Min. 2 Nm - Max. 3 Nm).

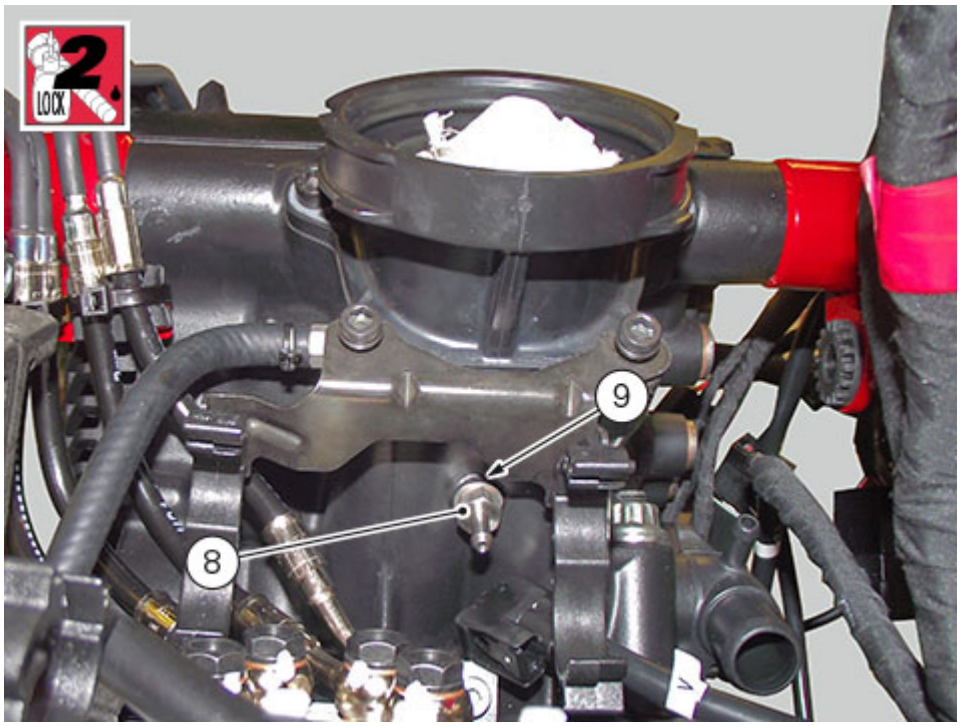

Working on the vertical head, fit seal (10) and tighten screw (11) with pre-applied specified threadlocker to a torque of 10 Nm (Min. 9 Nm - Max. 11 Nm).

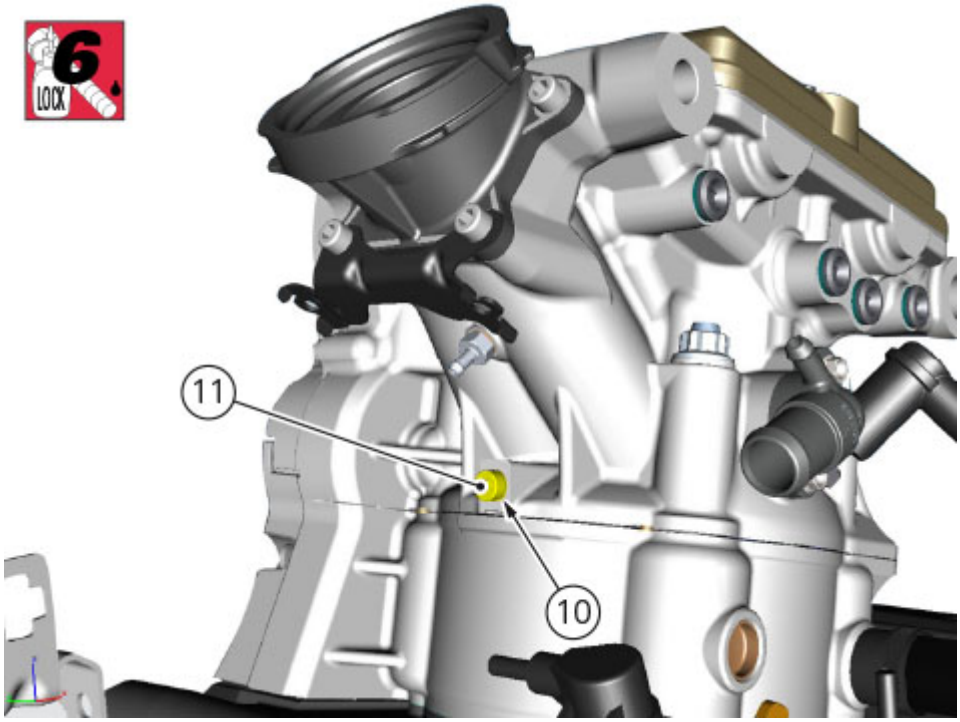

Refit the airbox and the throttle body (Refitting the airbox and throttle body).
Refit the tank (Refitting the fuel tank).
Refit the seat (Refitting the seat).

Removing the intake manifold and water union

Remove the seat (Removing the seat).
Remove the fuel tank (Removing the fuel tank).
Remove the airbox and injector unit (Removing the airbox and throttle body).

Working on both manifolds, loosen the screws (1).

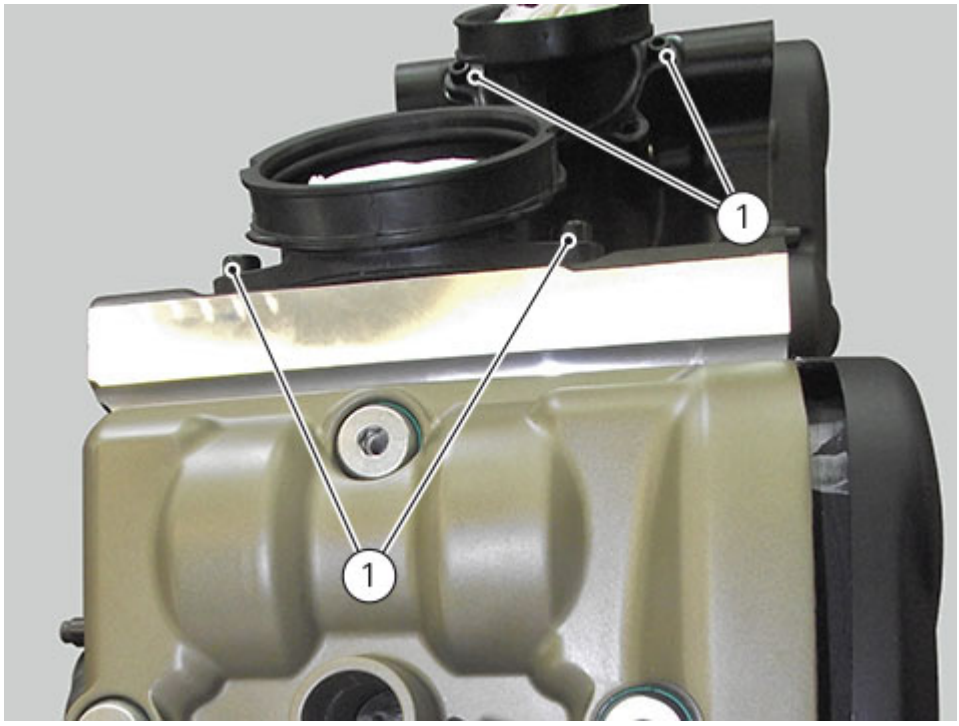

Working on the horizontal head manifold, loosen screws (2) and remove the expansion reservoir (3) support bracket.
Remove the horizontal head intake manifold (4).

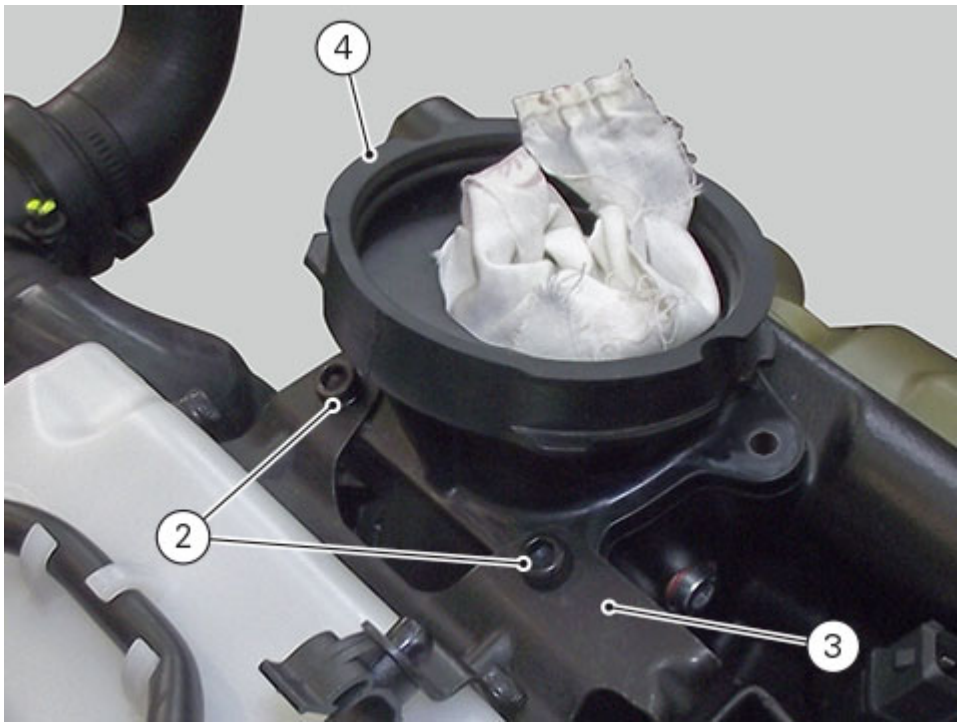

Working on the vertical head manifold (5), loosen screws (6) and remove the wiring cover (7).

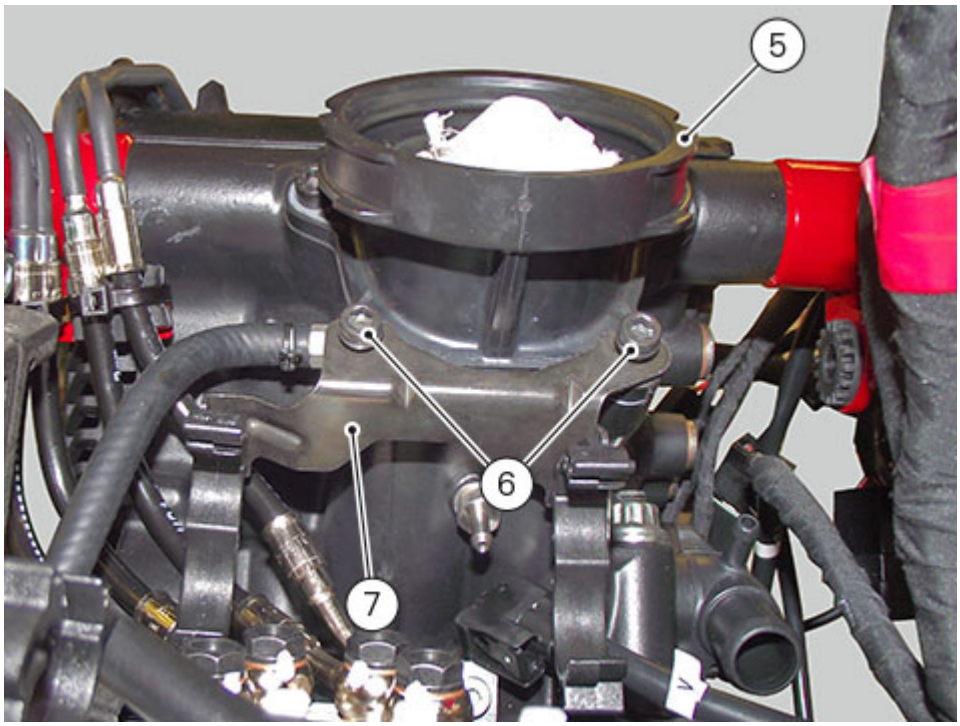
5
6
7

Refitting the camshafts

If the stud bolts (17) and (18) were removed, apply the recommended threadlocker to the short end of the stud bolts (17) and (18), i.e. the side that is to be screwed into the cylinder head.
Tighten the stud bolts (17) and (18) to a torque of 10 Nm (Min. 9 Nm - Max. 11 Nm).

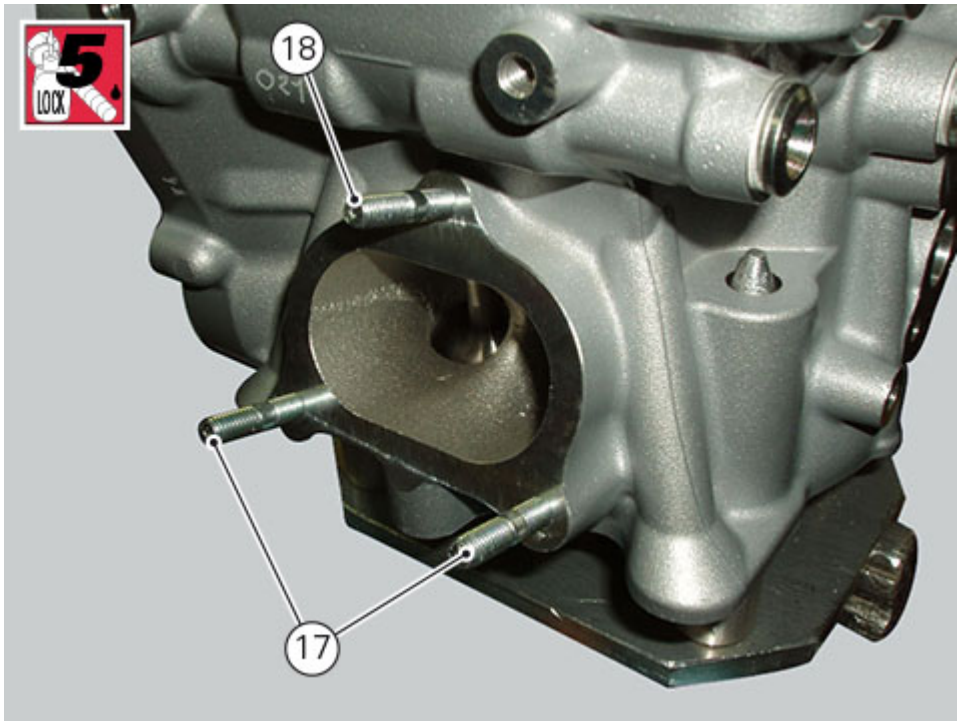

Pay attention to the exhaust side flange featuring three threaded holes (A) for stud bolts; on the intake side there are four threaded holes (B) for the relevant stud bolts.

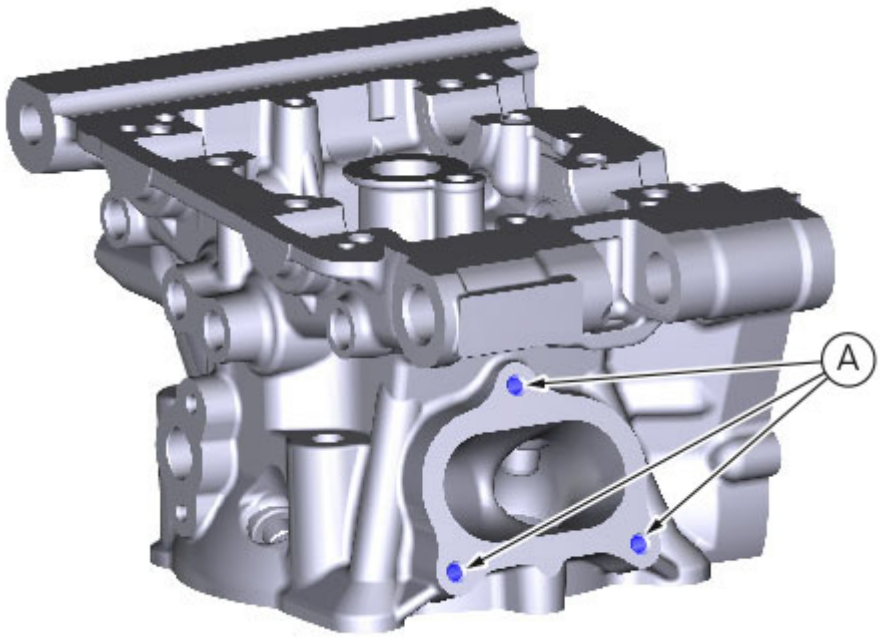

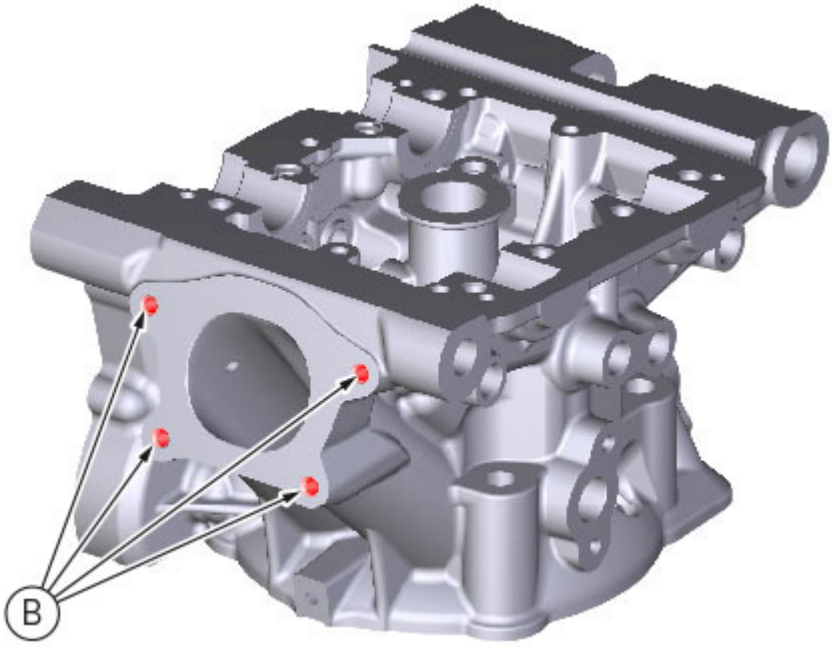

Check that the camshafts (marked "VA" and "VS" for the vertical head and "OS" and "OA" for the horizontal head) are clean and in good condition. If the camshafts are not new, use emery cloth to remove signs of wear on the cam and support surfaces, working on a flat surface.
VA: vertical head, intake side
VS: vertical head, exhaust side
OA: horizontal head, intake side
OS: horizontal head, exhaust side

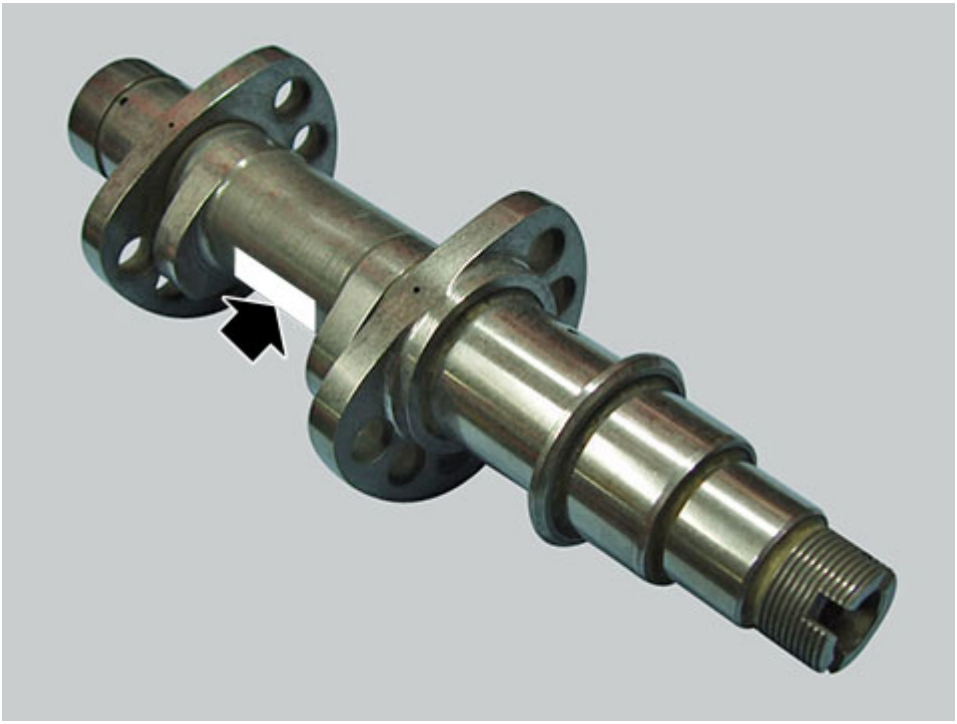

Use the specified product to lubricate the head, the supports (11) and (12) and the camshaft seats.

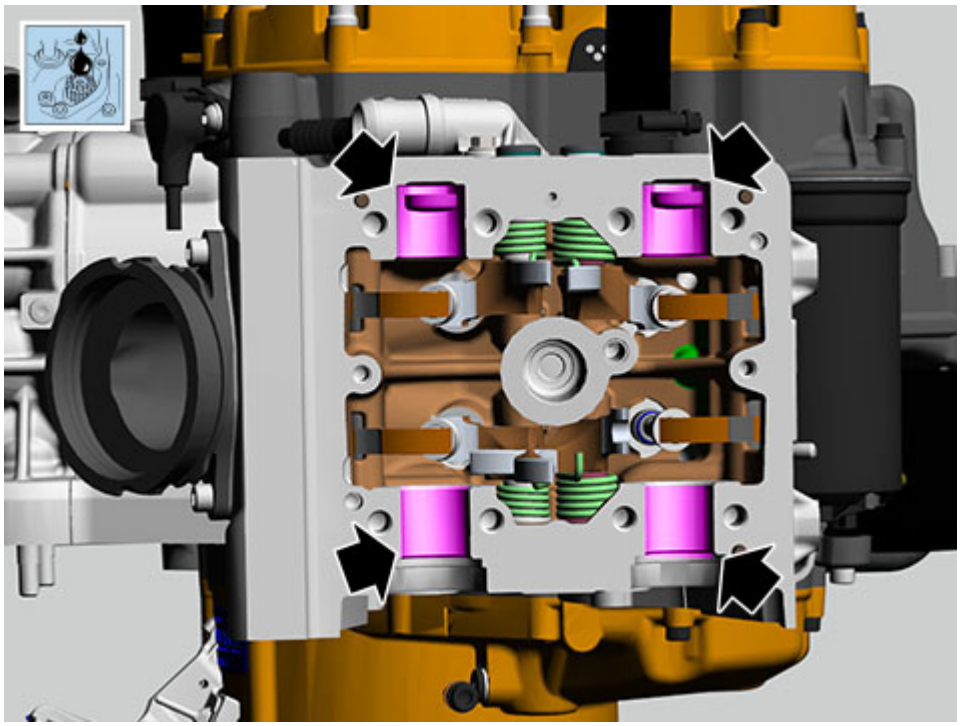

It is necessary to fill with specified lubricant the four seats (C) on caps (11) and (12).

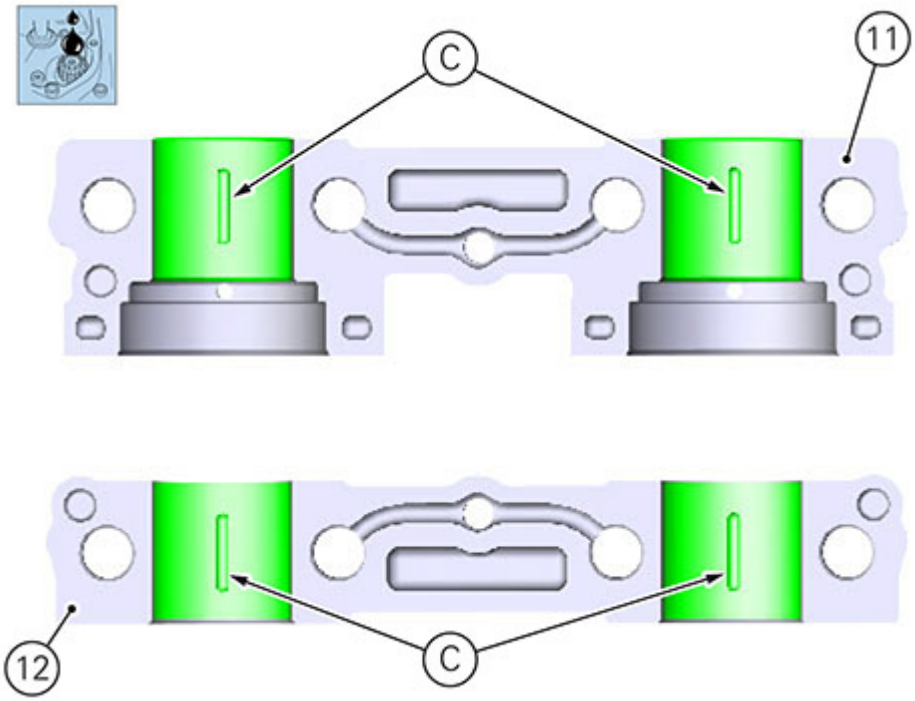

Apply the specified sealant at the four points of the support (11) shown in red in the figure.
Clean off any excess of sealant.

Apply sealant only on the timing side support (11) and not on support (12).

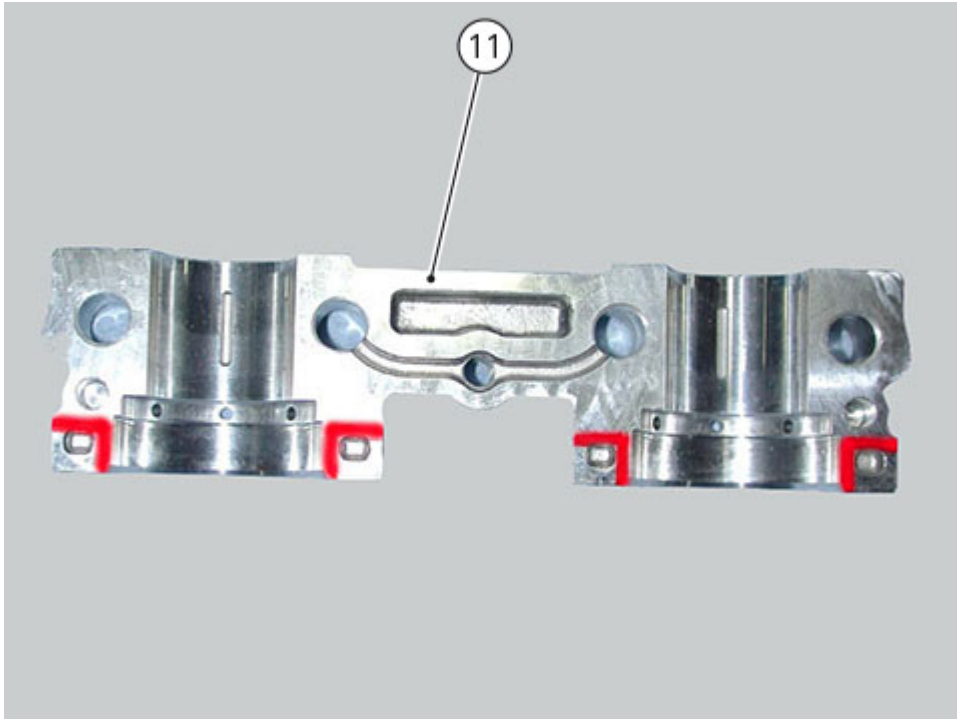

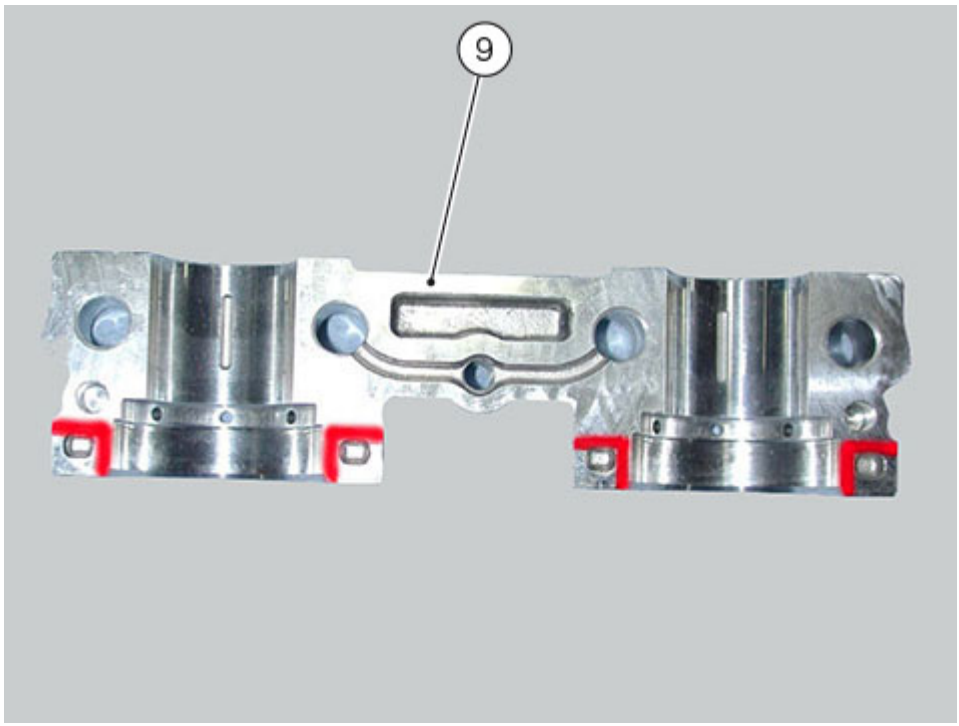

Install the camshafts (14) and (15) in the cylinder head, and rotate them to distribute the lubricant evenly. Check that the centring dowels (13) are present.

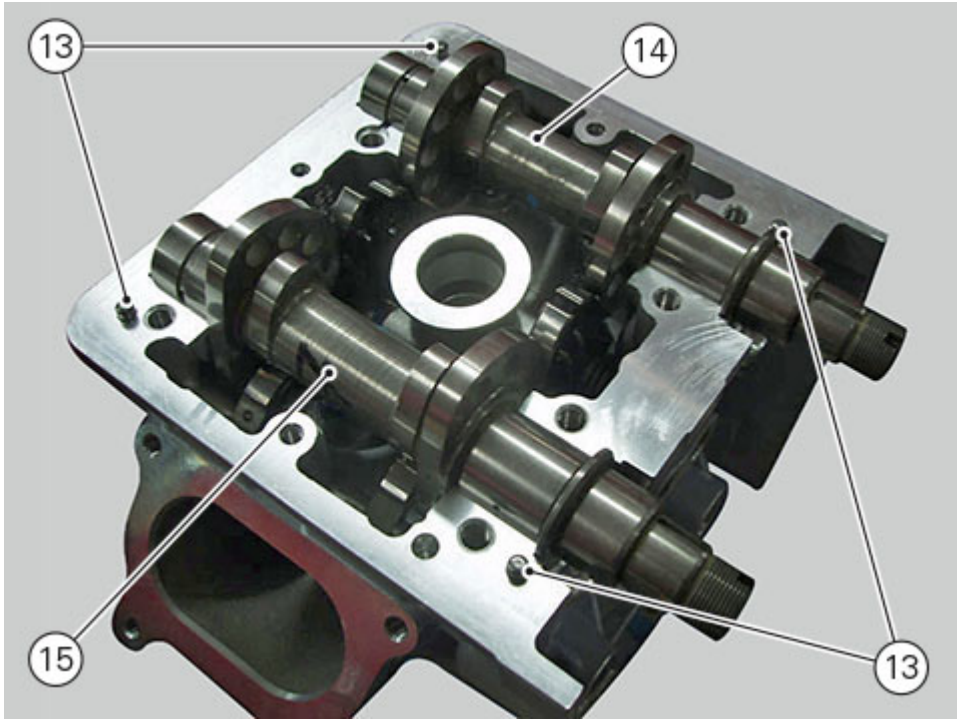

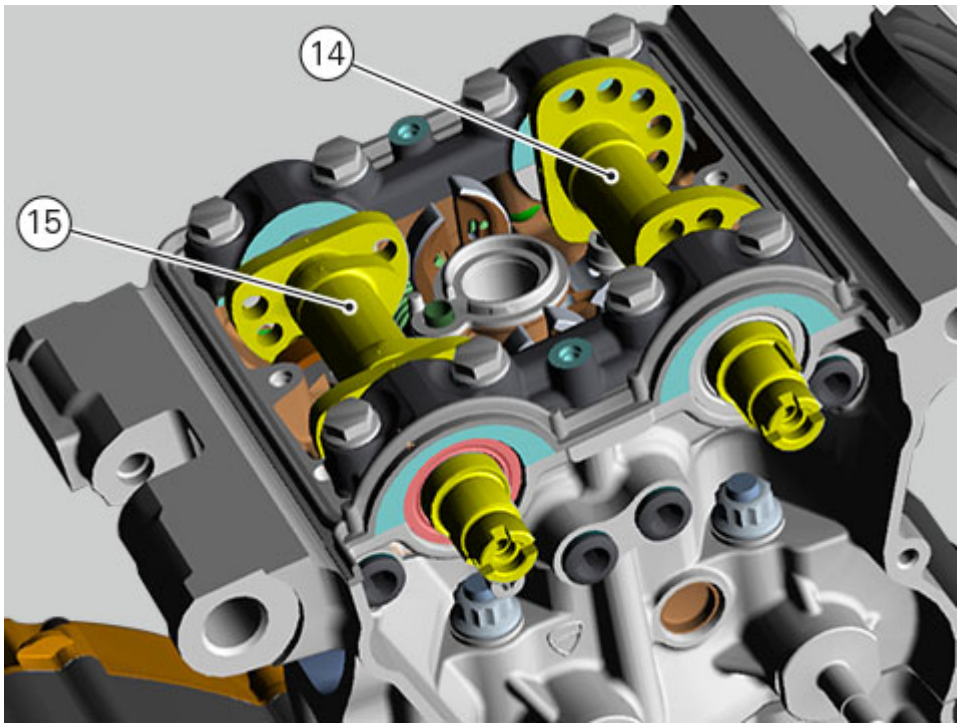

Fit the supports (11) and (12) so that they are perfectly seated on the cylinder head, checking that the number stamped in zone (B) of the cylinder head is the same as the number stamped in the support zone (C).

Important
The support must be installed on the timing side.

Bed down the supports.
Apply engine oil to the thread and underhead of screws (10).
Start screws (10).

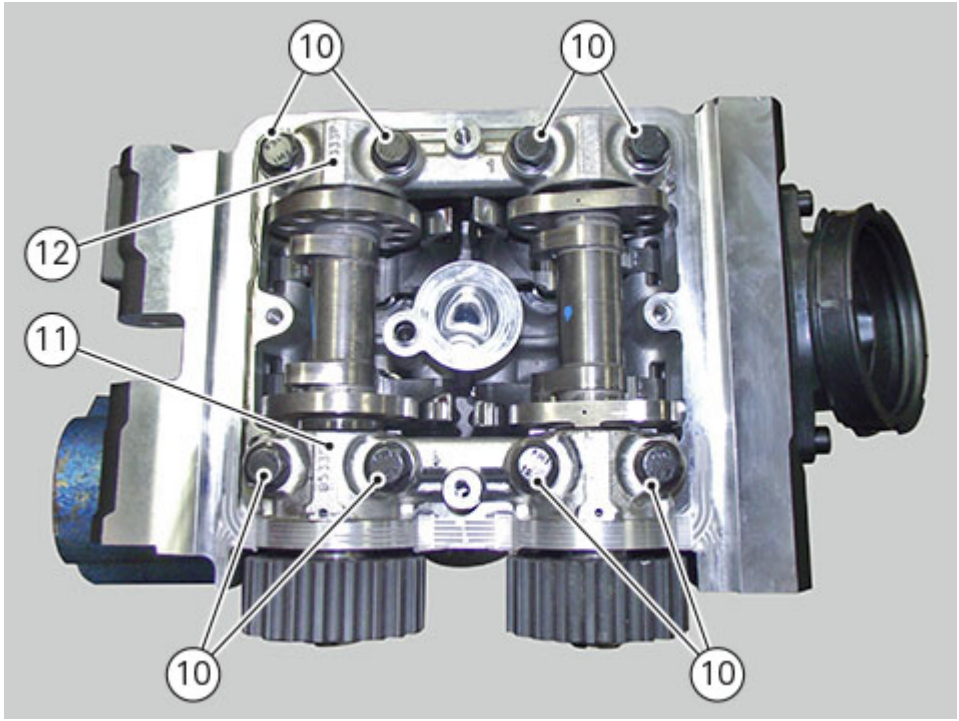

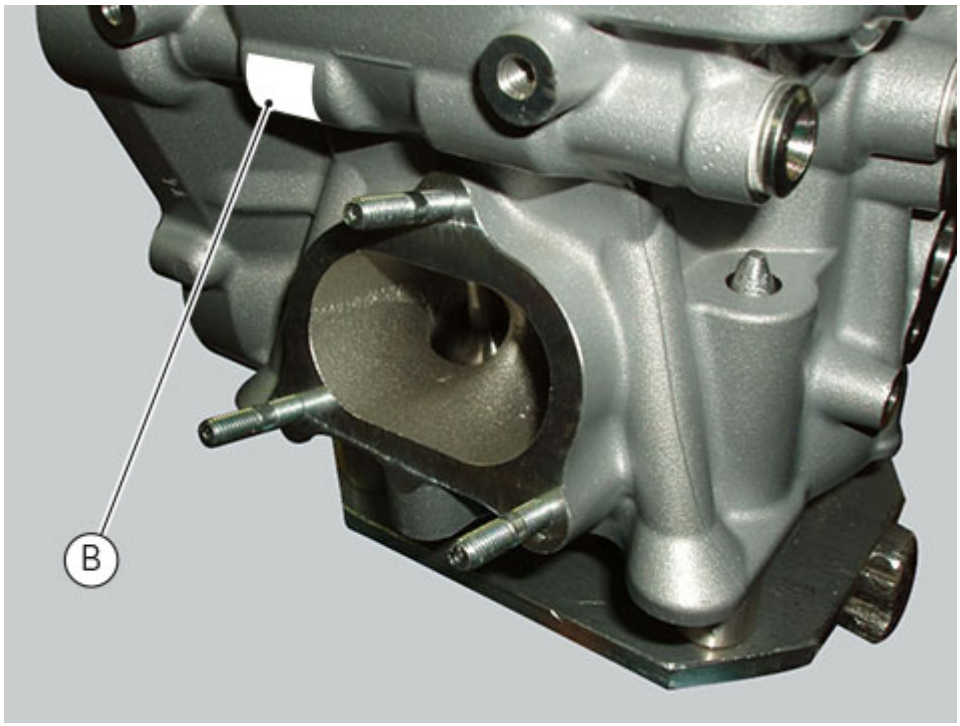

Pre-tighten screws (10) to a torque of 10 Nm (Min. 9 Nm - Max. 11 Nm).
Pre-tighten one support at a time, working in the sequence 1-2-3-4-5-6-7-8.
Then tighten screws to a torque of 22.5 Nm (Min. 21 Nm - Max. 25 Nm).
Tighten one support at a time, working in the sequence 1-2-3-4-5-6-7-8.
Remove any excess of sealant from between the cylinder head and the cap.
Turn the camshafts by hand to check that they rotate freely.

Note
The first screw to work on, in position 1, must always be positioned on the intake and timing side.

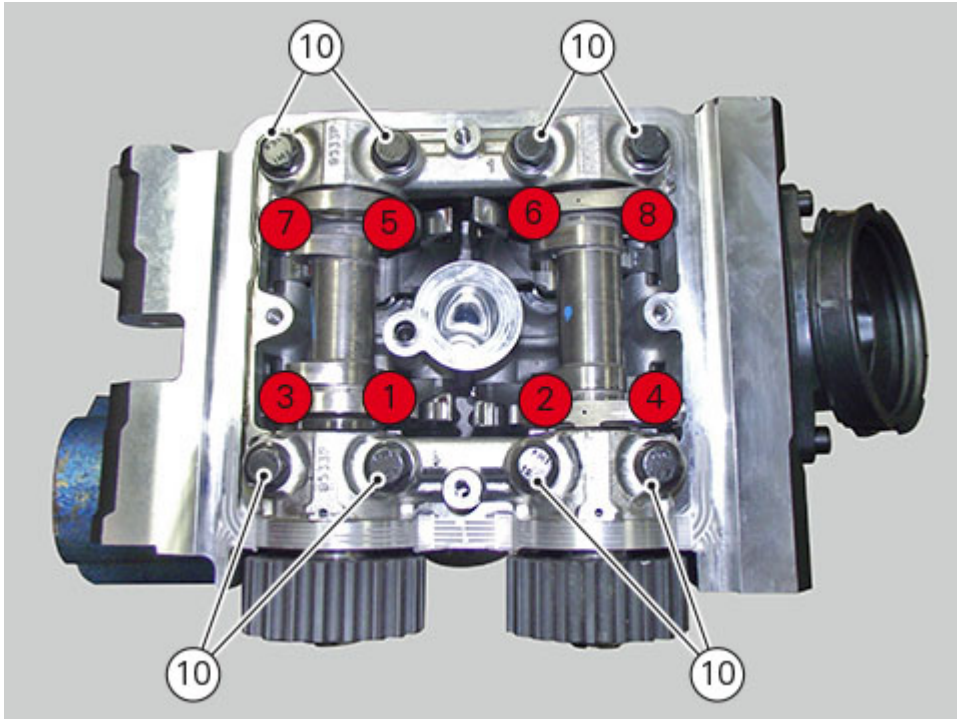

Check valve lift as explained (Checking valve lift).

Sealing rings

Lubricate the sealing rings (16) with denatured alcohol.
Install driving tool (D) no. **88713.2861** on the camshaft and start the seal ring on the cylinder head with the side featuring a spring.

Important
Always fit new sealing rings upon reassembly.

Use the drift provided with the tool and a mallet to seat the sealing rings.

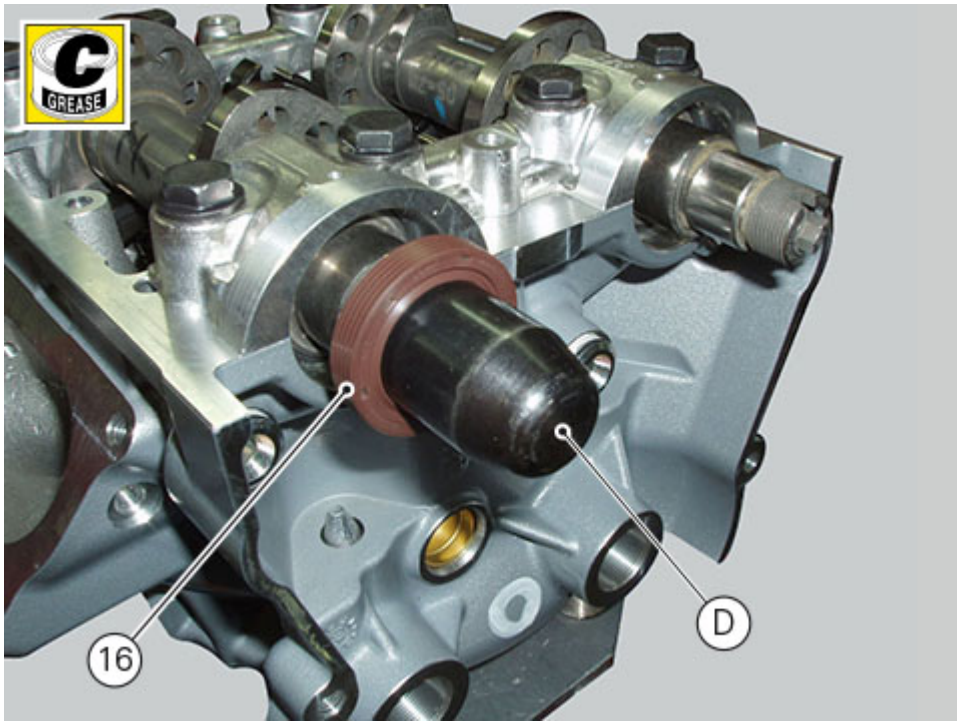

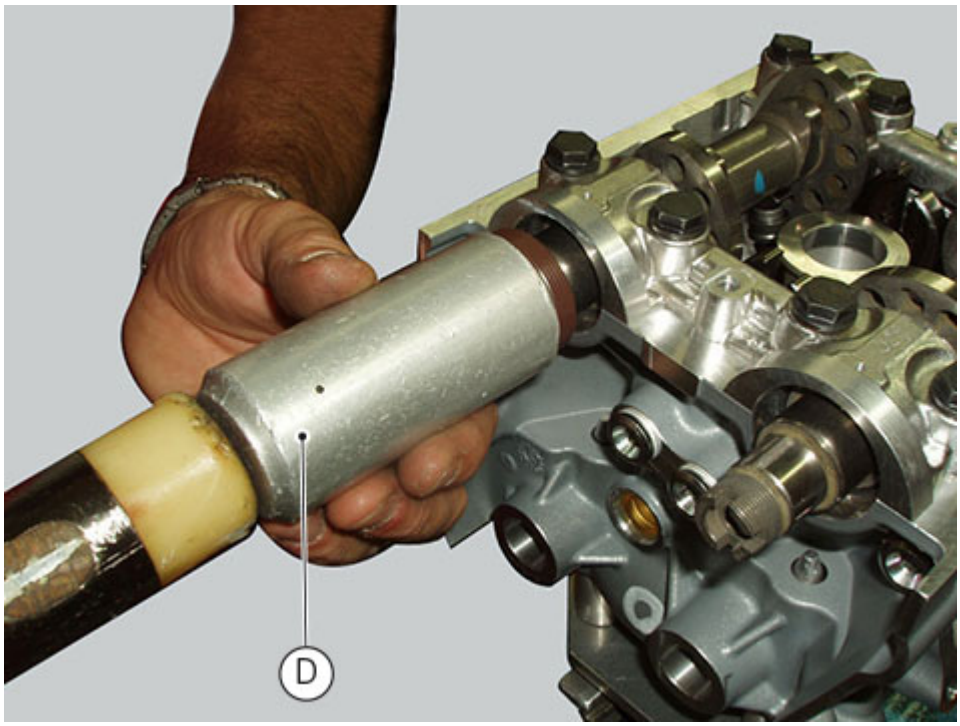

When correctly installed, the sealing ring should be flush with the bevel of the cylinder head.



Cylinder head cover

Apply the specified sealant at the five points, highlighted in red, of the head cover (7).

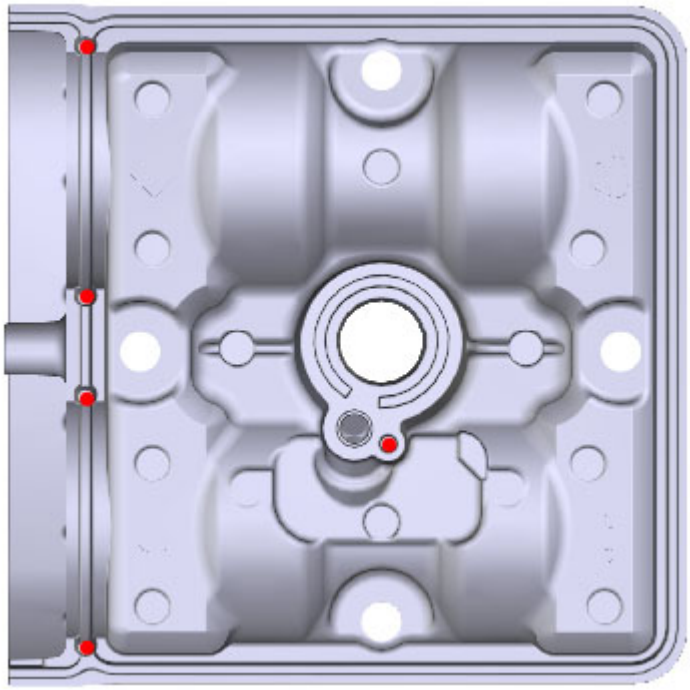

Fit the gaskets (8) and (9) on the cylinder head cover (7), as shown in the figure.

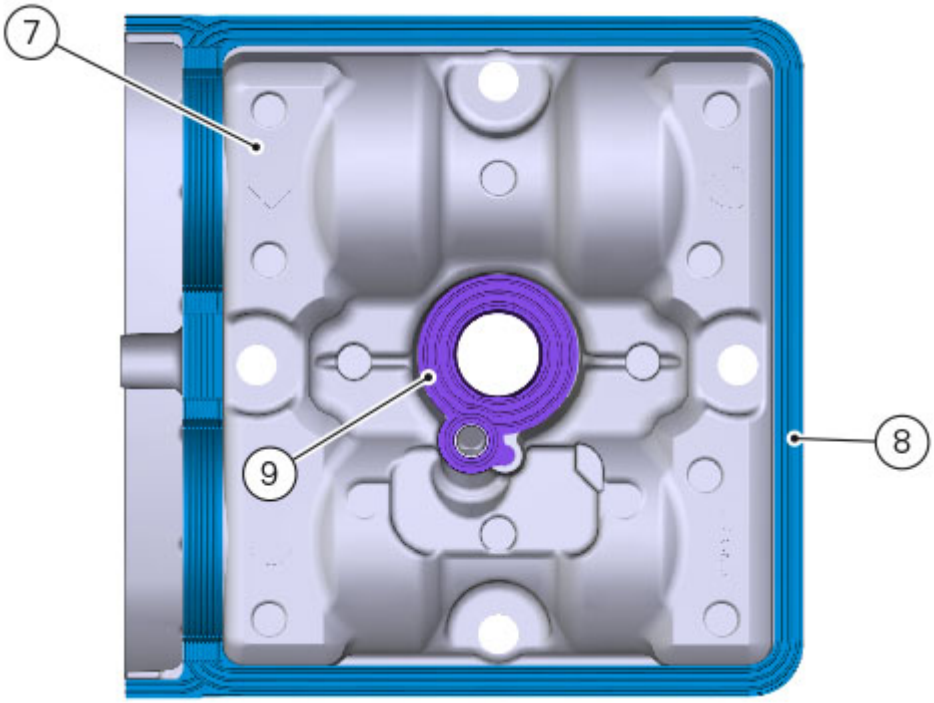

Apply in the two areas of the cylinder head surface a strip of about 2 mm (MAX. about 4 mm) of specified sealant, observing the heights and position indicated in figure.

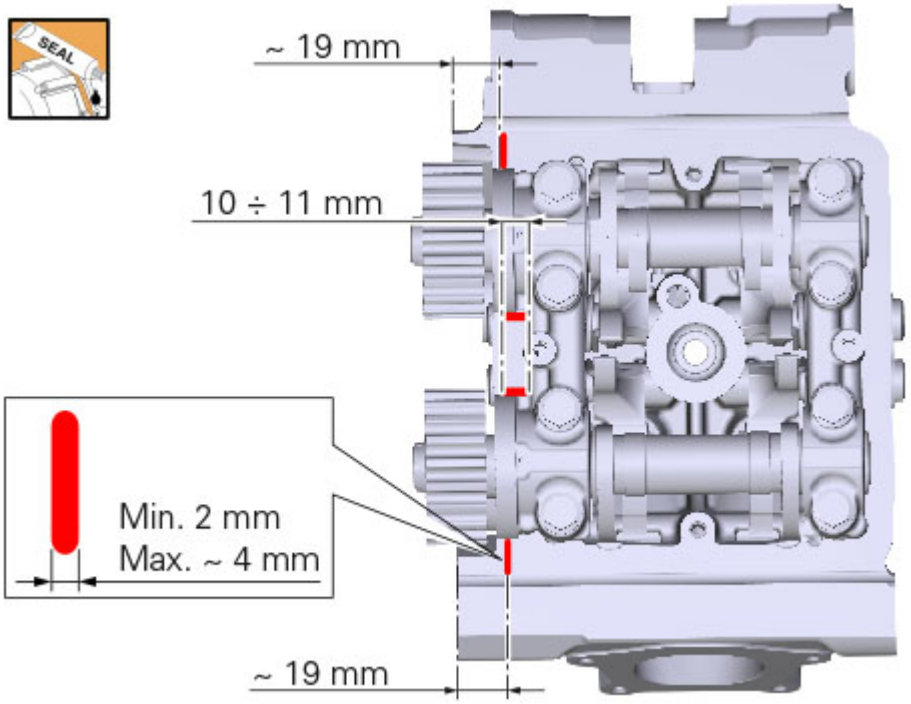

Cylinder head cover identification: the vertical head cover (7) has a tooth (E) on the left-hand side (exhaust side), whereas cover (20) has a tooth (F) on the right-hand side (exhaust side).

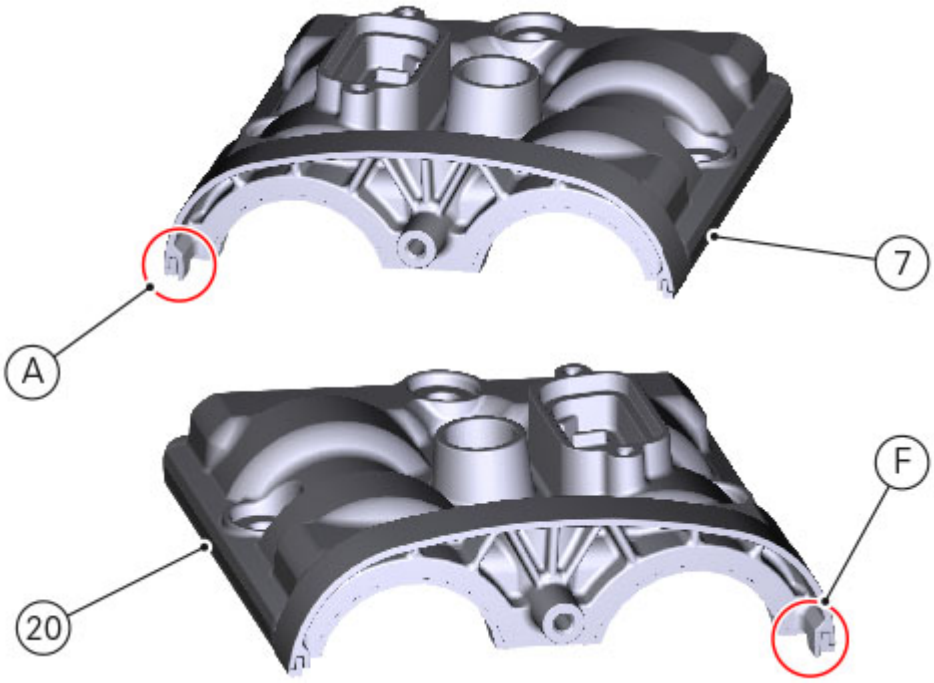

If previously removed, insert the centring pin (21).

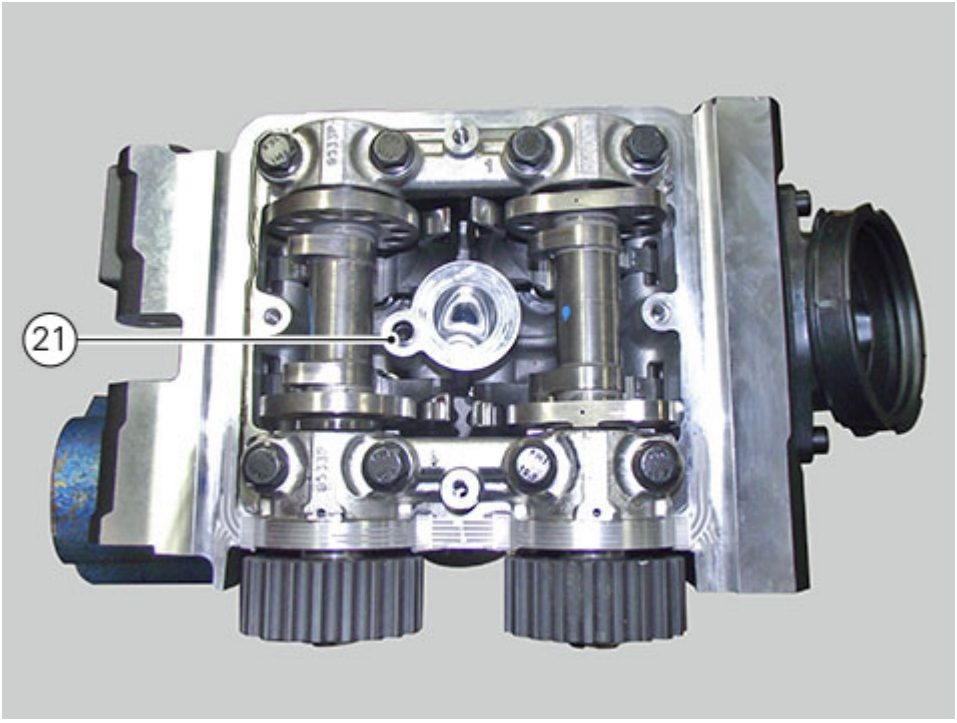

Locate the cover (7) (or (20)) on the cylinder head, aligning it with the four fixing holes.
Start the special screws (5) and screw (19), after positioning the relevant O-Rings (6).
Tighten the special screws (5) and screw (19) to a torque of 10 Nm (Min. 9 Nm - Max. 11 Nm), respecting the indicated sequence.

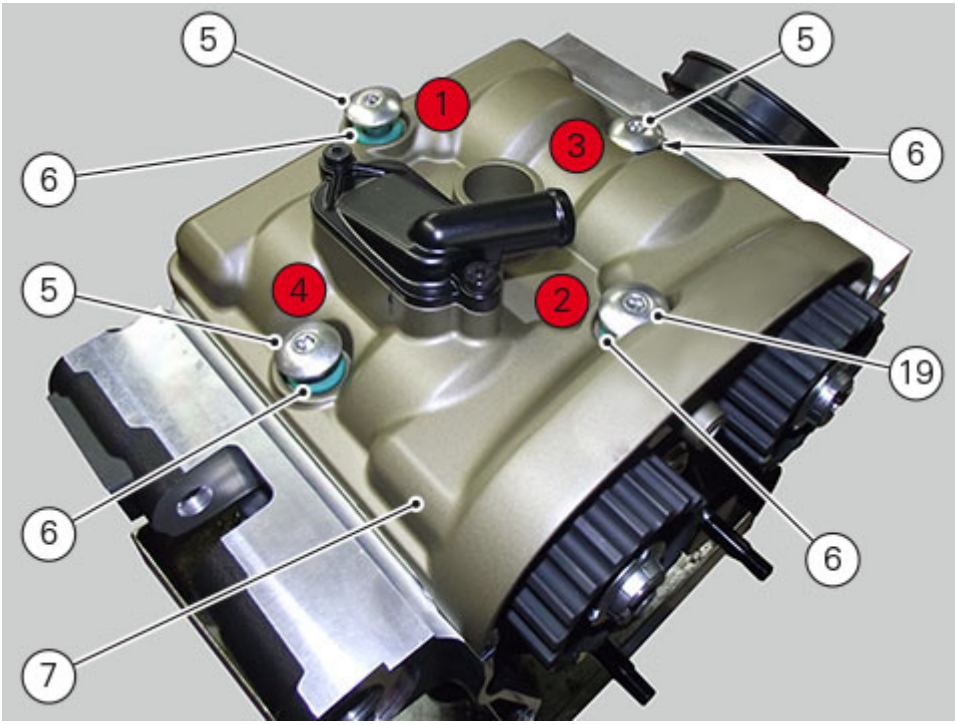

Remove excessive sealant from the area of application.
Repeat the same procedure for the other cylinder head.
If screw (22) has been removed, upon refitting, position washer (23) and apply specified threadlocker on the screw and tighten it to 10 Nm (Min. 9 Nm - Max. 11 Nm).

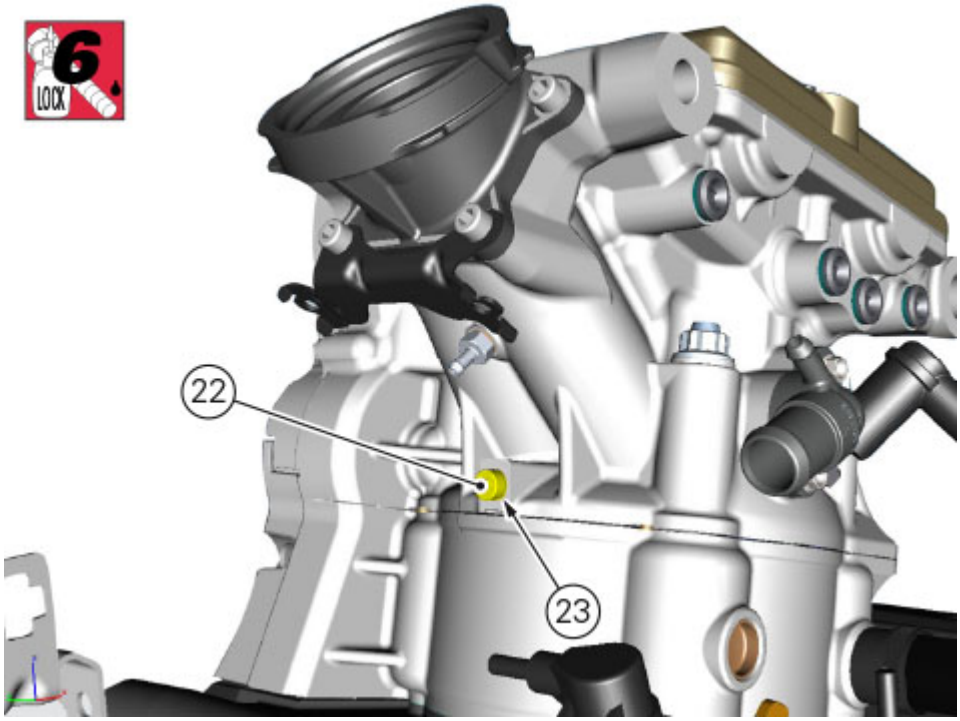

Install and tighten spark plug (1) with a suitable wrench.

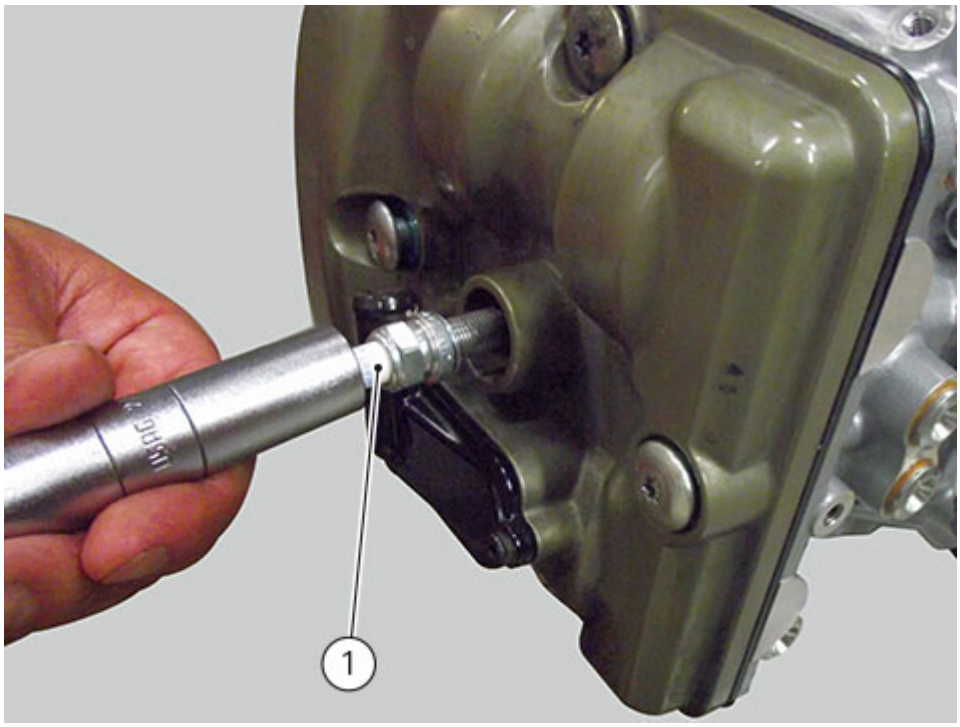

Position the wiring/hose cover on vertical head (3) and tighten the three screws (2).
Restore the ABS tubes and wiring position on cover (3) (Positioning wiring/hoses).

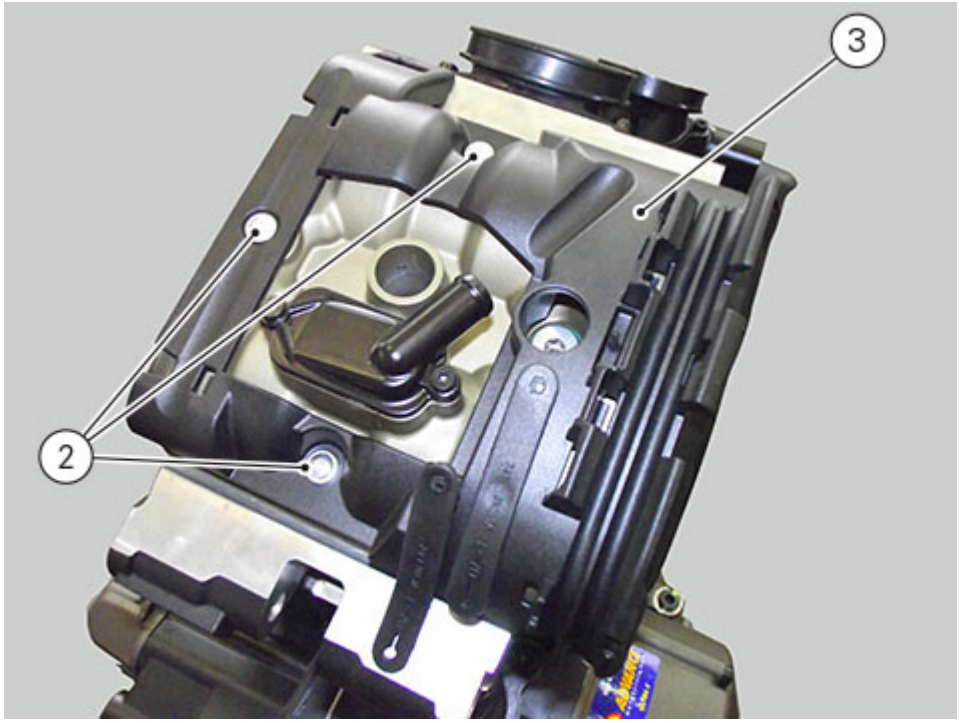

Refit the water radiator (Refitting the water radiator).
Refit the seat (Refitting the seat).

Check of the camshafts and supports

Check the cam contact surfaces for scratches, grooves, steps and waving.
Worn cams are frequently the cause of poor timing, which leads to loss of engine power.
Place the camshaft between two opposite centres and check the run-out on the areas indicated using two dial gauges.
Service limit: 0.1 mm.

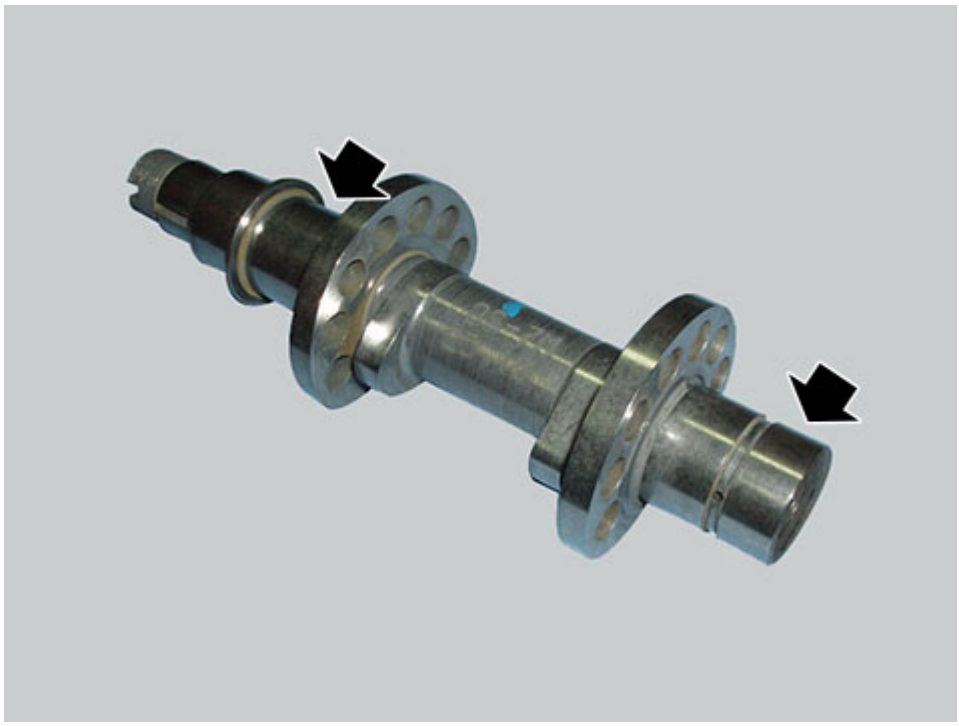

Visually inspect the camshaft tracks for scoring and abnormal wear. If any of the above defects are found, the camshaft should be replaced.
If you find scoring or excessive wear, check the operation of the engine lubrication circuit.

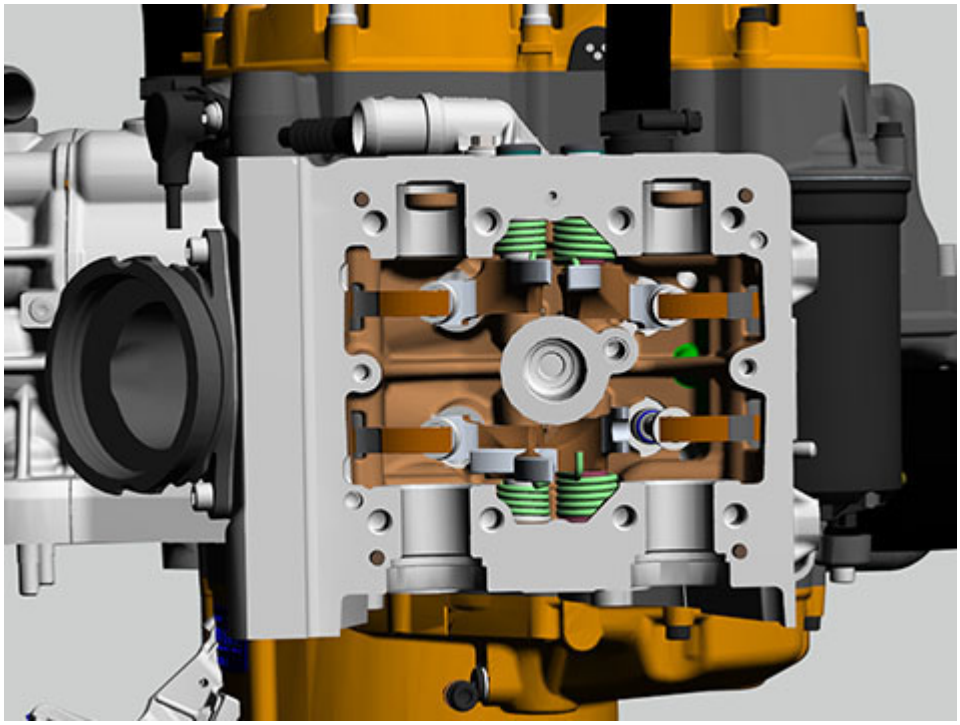



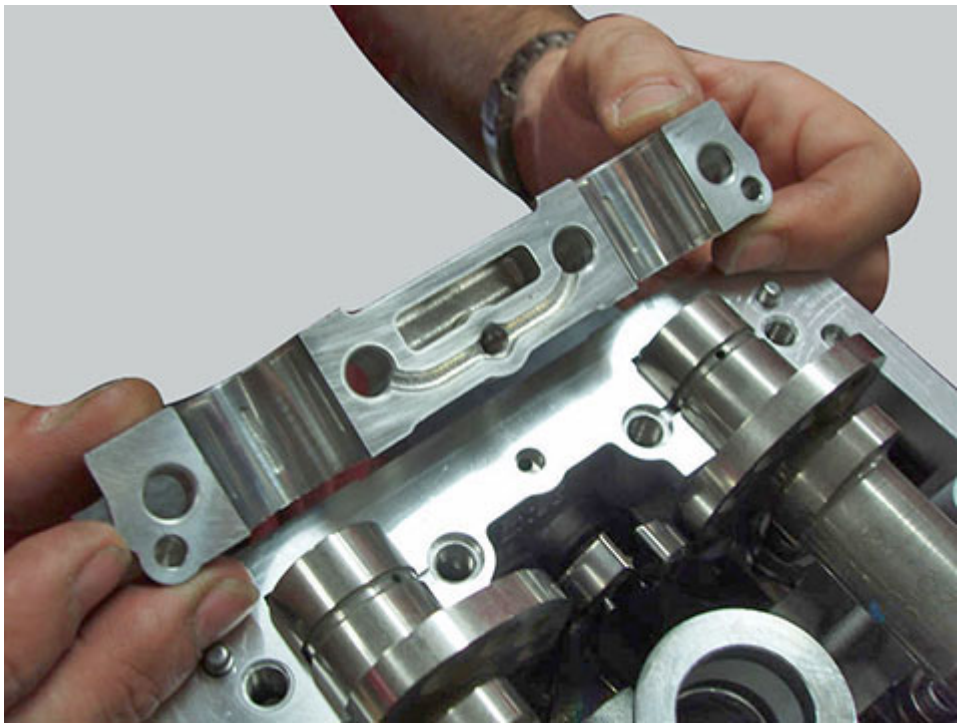

Removing the camshafts

Remove the seat (Removing the seat).
Release the water radiator lower retainer and move it towards the front wheel (Removing the water radiator).
Release the ABS hose and wiring from the vertical head (Positioning wiring/hoses).
Loosen the timing belt covers (Removing the timing belt external covers).

Removing the head covers.
Working on the vertical head, loosen the three screws (1) and remove the wiring cover (2).

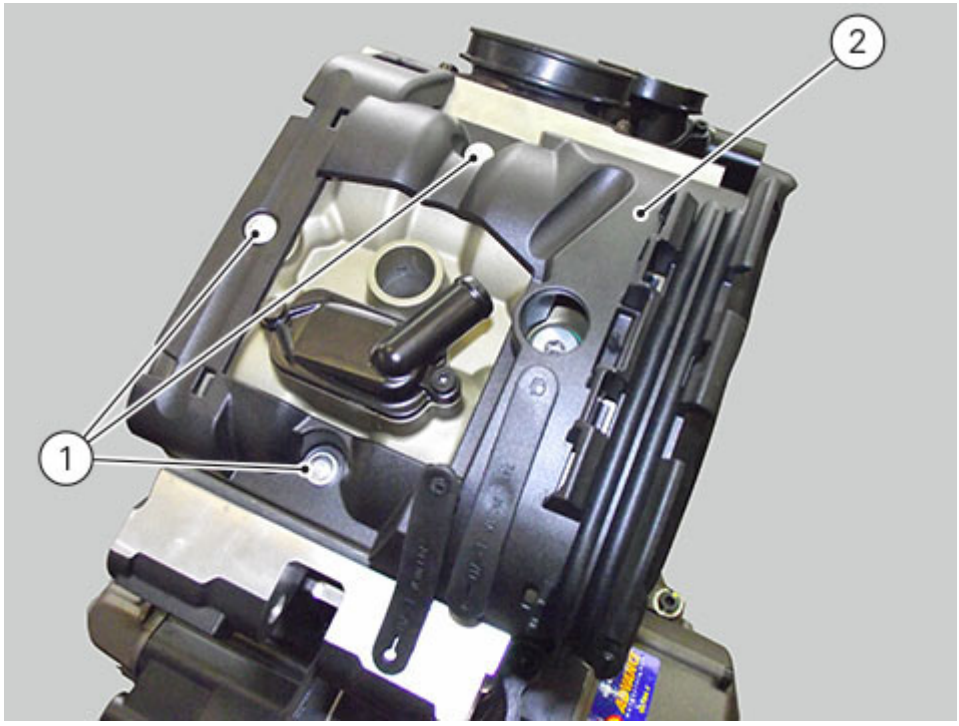

The described operations apply to both head covers.

Remove spark plug (3) with a suitable wrench.

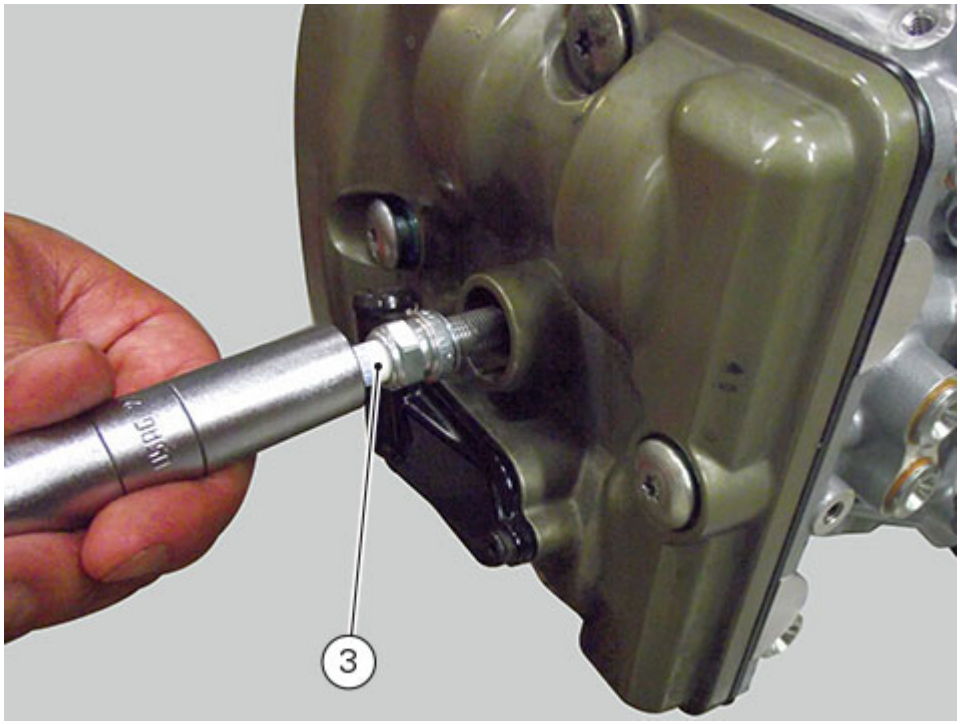

Slide clamp out and disconnect the secondary air system pipe (4).

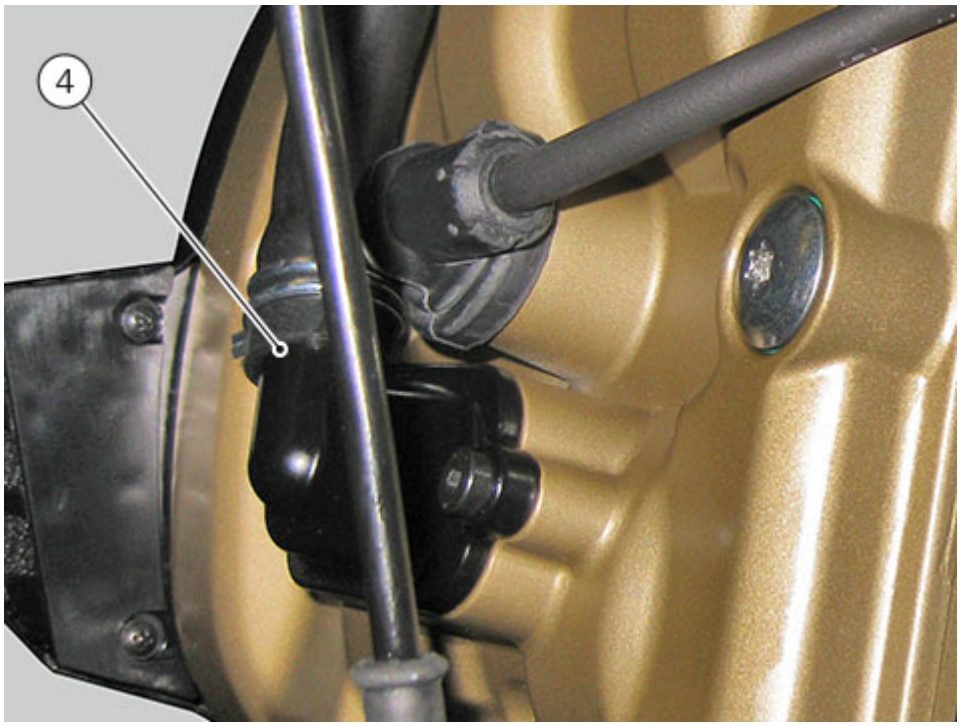

Undo and remove the screws (5) and (19) and the O-rings (6) from the cylinder head covers. Remove the cylinder head cover (7).

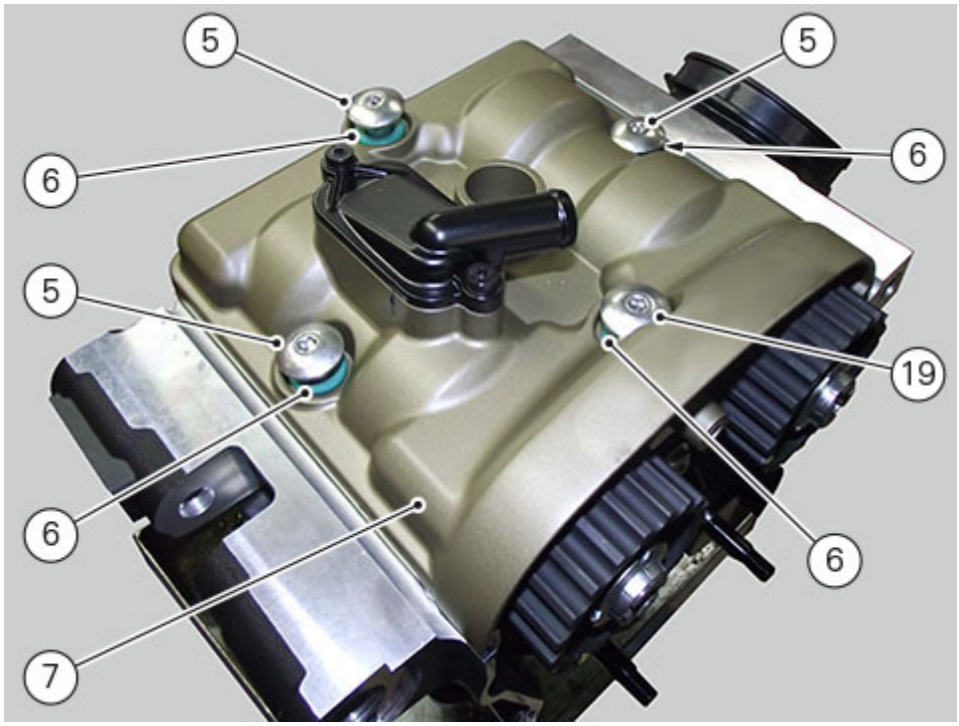

Remove the gaskets (8) and (9).

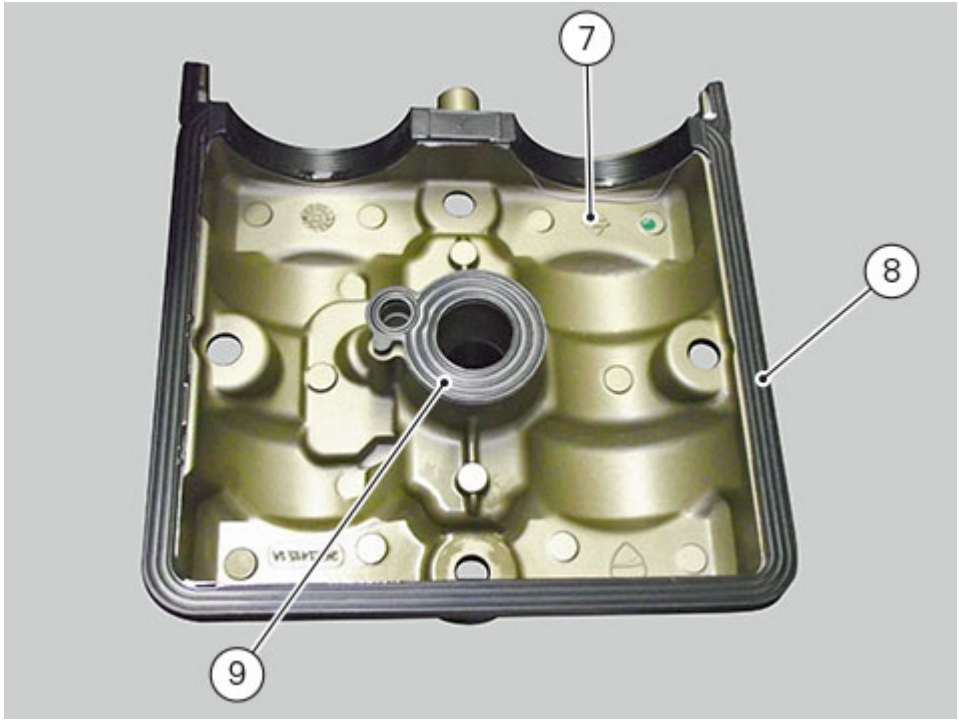

Removing the camshafts.

Undo the screws (10) securing the camshaft supports. Withdraw the camshaft supports (11) and (12) straight out from the cylinder head, taking care not to damage the machined faces and centring dowels (13).
Remove the exhaust side camshaft (14) and intake side camshaft (15).
Slide seal rings (16) at their ends.
Repeat the same procedure for the other cylinder head.

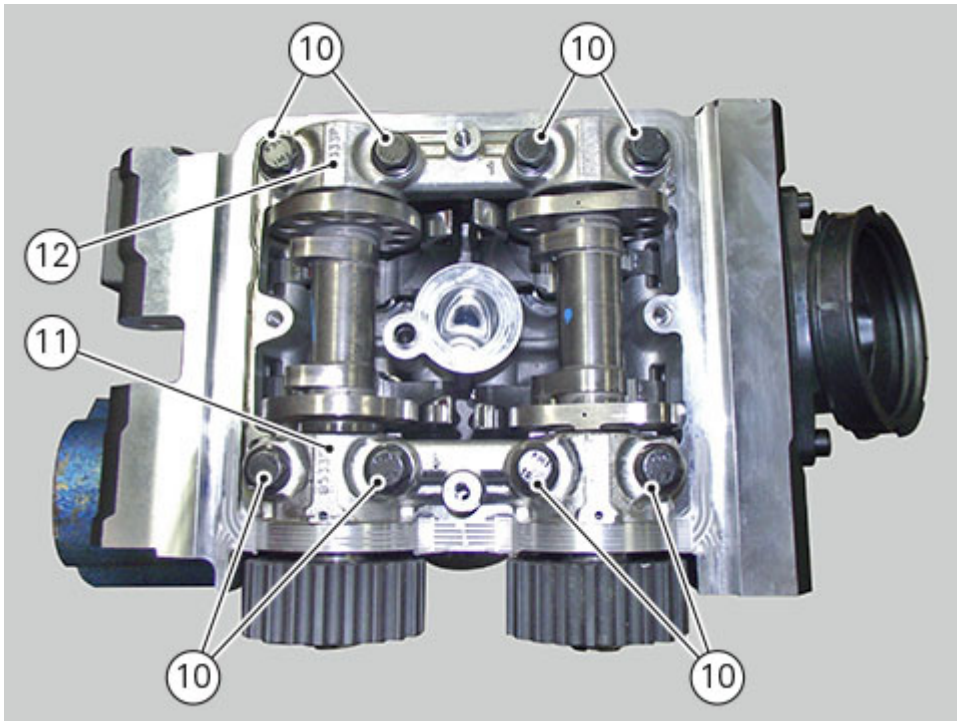

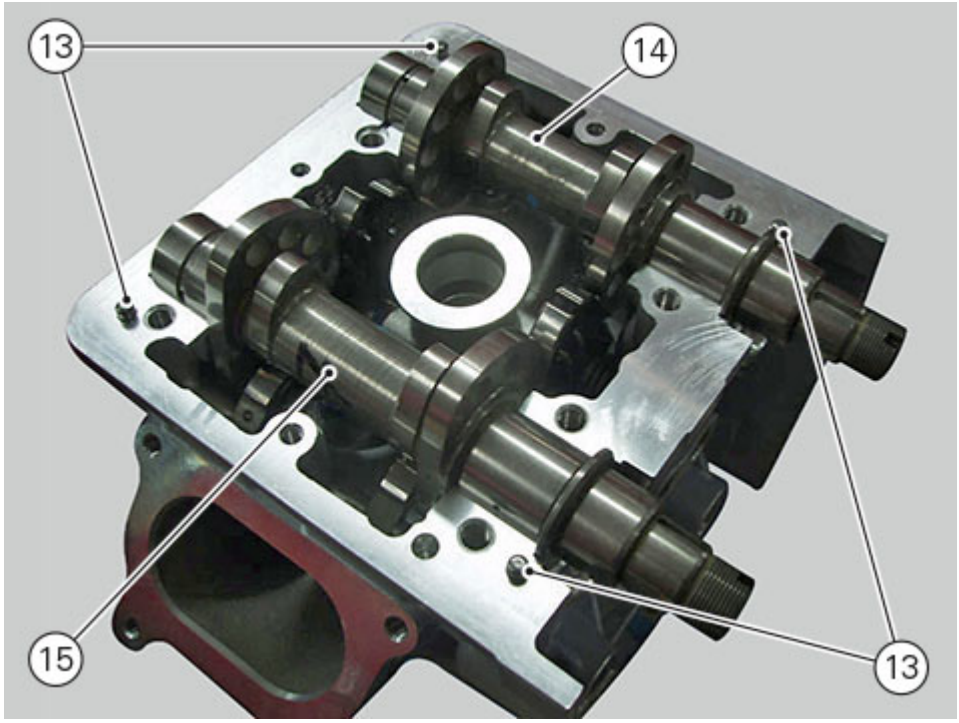

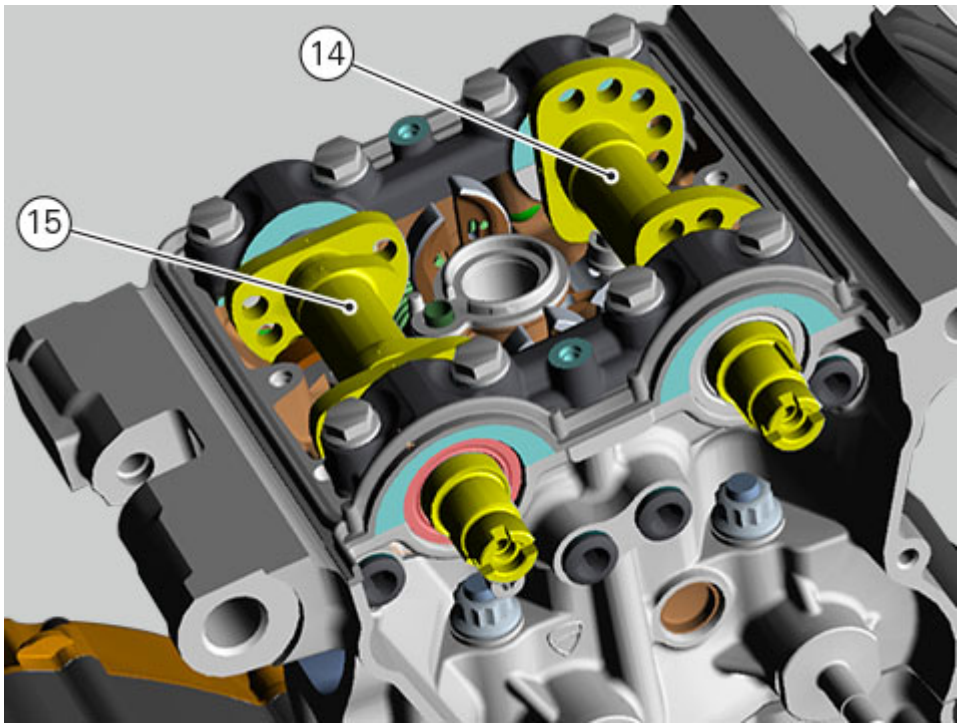

If necessary, unscrew the stud bolts (17) and (18) from the cylinder heads.

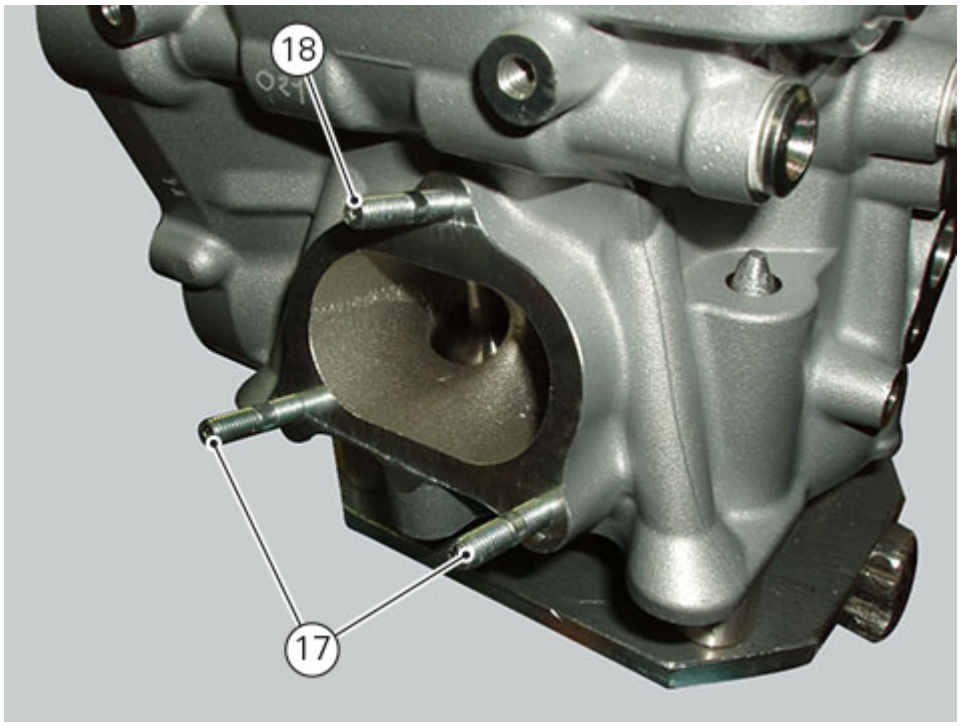
18
17

Refitting the cylinder head assemblies

Warning

To prevent oil leaks in the contact area between cylinders and crankcase, each time the head is removed, cylinder and piston must be removed as well to clean the mating faces of crankcase and cylinder and restore the worn gaskets and O-rings and apply again sealing compound.

Before fitting the head, check that the gasket (E) is fitted on the mating surface between head and cylinder.

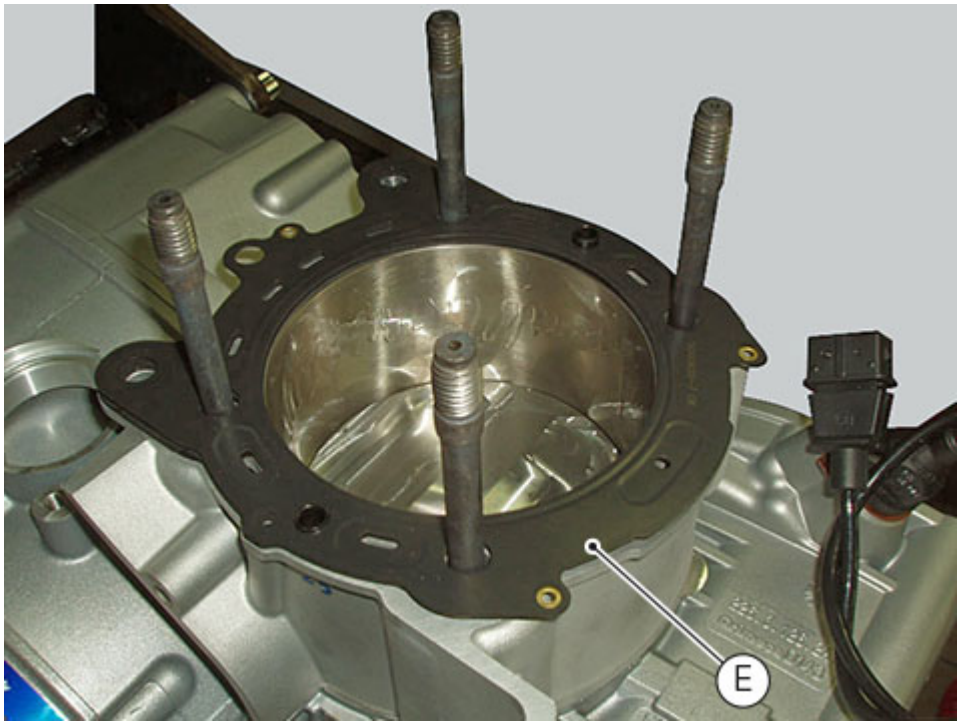

When fitting the gasket, side (E) with the stamped part no. must be in contact with the cylinder head.

Lower the cylinder head carefully over the stud bolts. Take care not to damage the threads.
Fit the special washers (2) and polygonal nuts (1) onto the cylinder head stud bolts.
Screw the polygonal nuts (1) on the stud bolts following a cross pattern using tool no. **88713.2676** together with a torque wrench.
Apply a snug torque of 20 Nm to nuts (1), a pre-tightening to a torque of 40 Nm (Min. 38 Nm - Max. 48 Nm) and a tightening to a torque of 60 Nm (Min. 57 Nm - Max. 63 Nm).

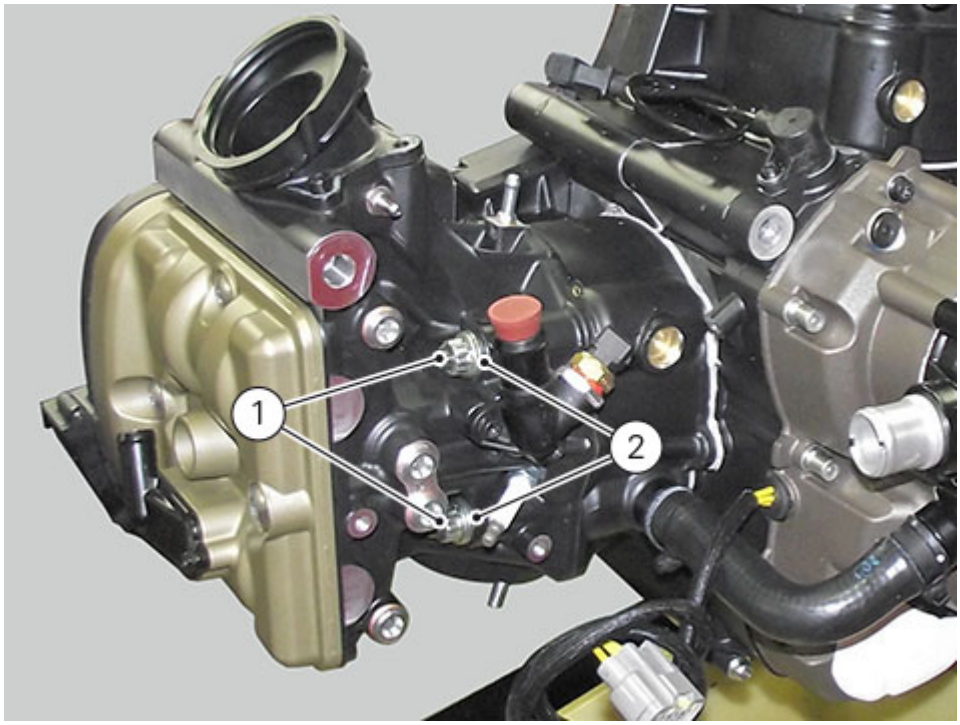

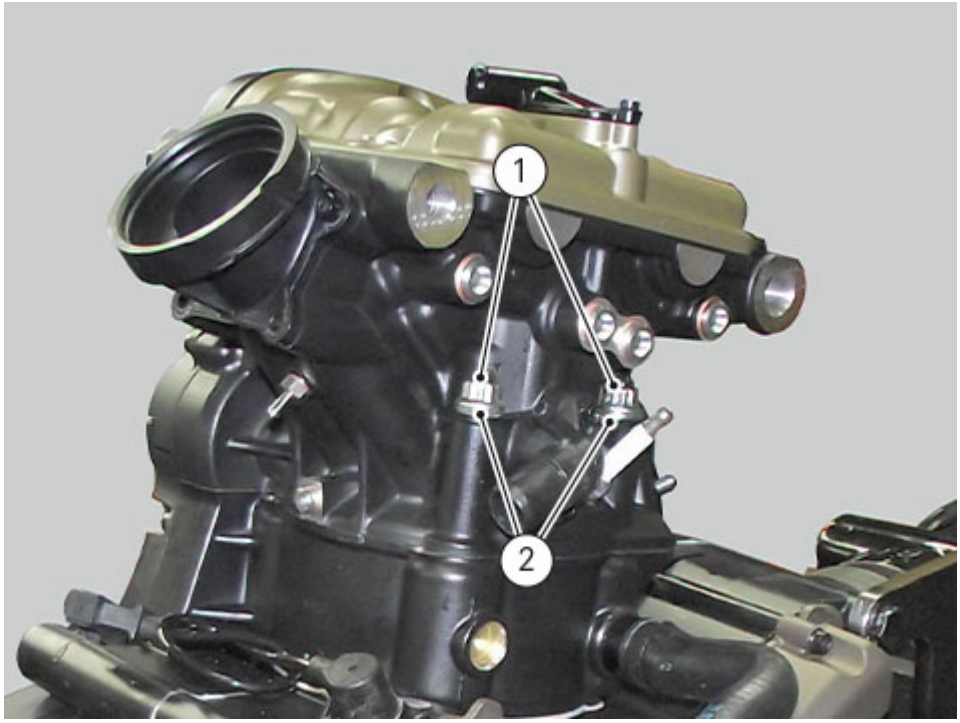

Refit the cooling system hoses (Refitting cooling system hoses and unions).
Refit the intake manifolds (Refitting the intake manifold and water union).
Refit the timing belts and covers (Refitting the cylinder head pulleys/fixed tensioners).
Refit the engine in the frame (Refitting the engine).

Reassembling the cylinder head

The exhaust side can be identified by the three threaded holes on the flange.



The intake side can be identified by the presence of four threaded holes on the flange.

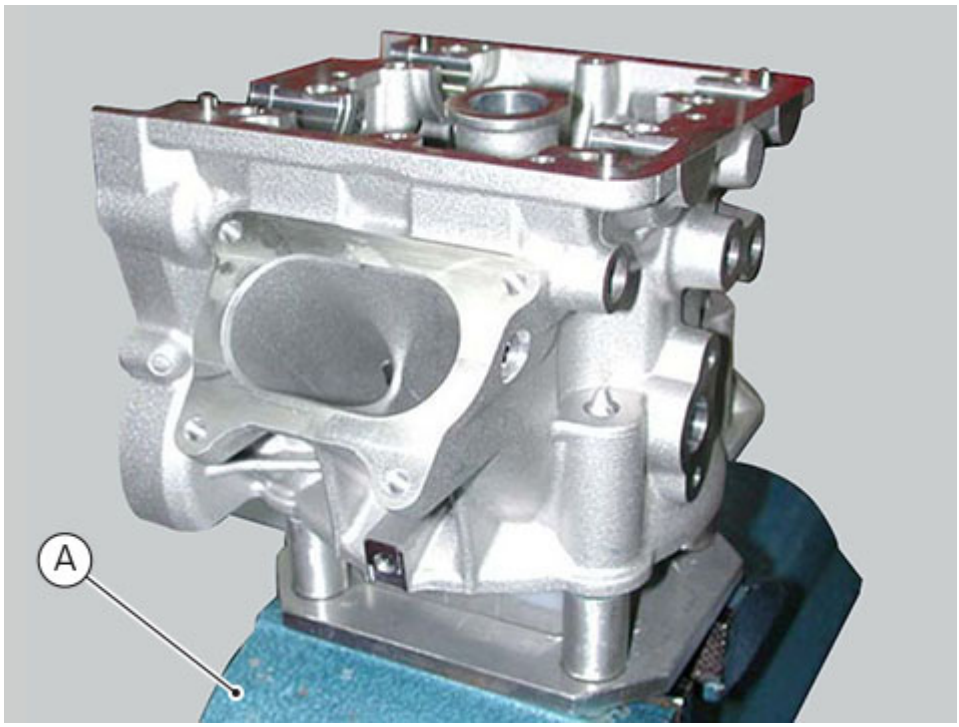

All the figures in this chapter refer to a vertical cylinder head.

Valve guide sealing rings

Position the cylinder head on the appropriate support (A) no. **88713.2103**.
Use engine oil to lubricate the valve guide sealing rings (1) and insert them from the spring side onto tool (A) no. **88713.2442**.
Fit the end of the tool into the valve guide and use a hammer to tap the sealing rings (1) home into the valve guides.

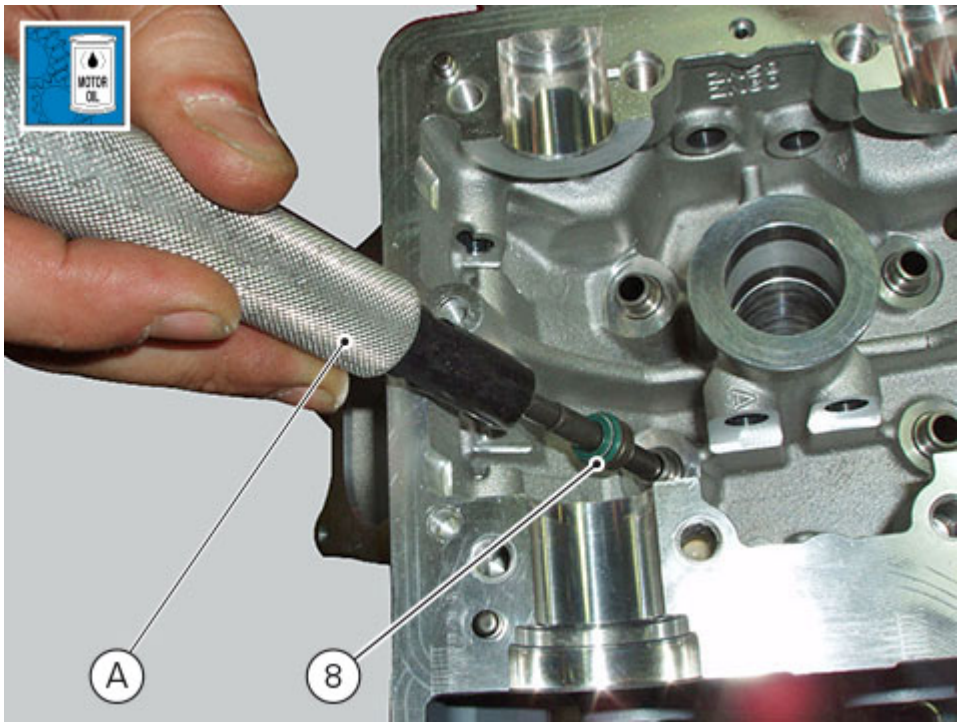
MOTOR OIL
A
8

Overhauling the cylinder head components

Cylinder heads

Remove any carbon deposits from the combustion chamber and its ducts.
Remove any scale from the coolant ducts.
Check for cracking and inspect the sealing surfaces for scoring, steps or other damage.



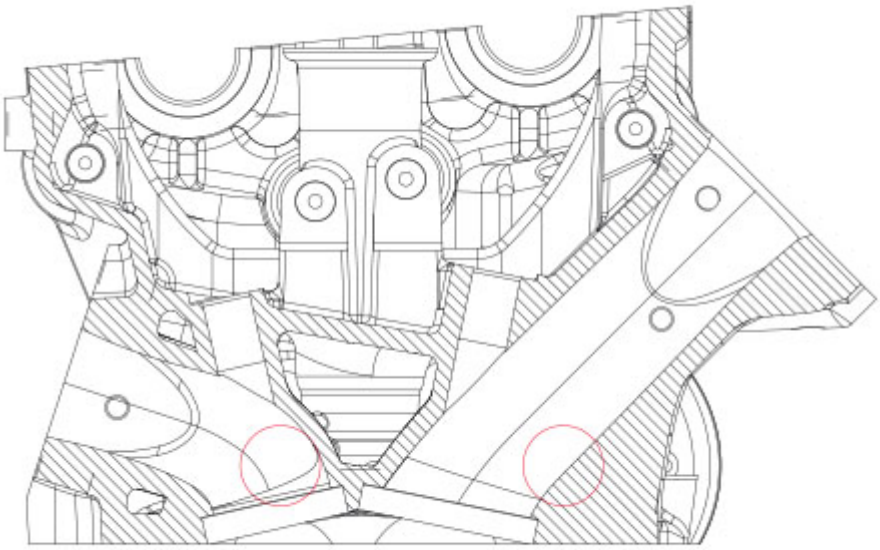

Check that the cylinder mating surfaces of the cylinder head are free of carbon deposits and scale. If this is not the case, spread diamond lapping paste (6 to 12 micron thickness) on a reference surface and slide the cylinder head on the surface as shown in the figure until a flat surface is obtained.

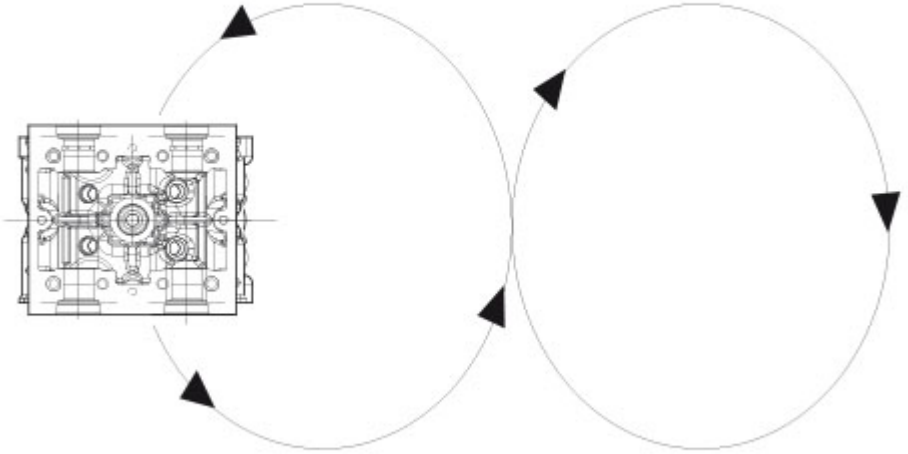

Important

Since it is absolutely necessary that the machining is extremely precise, we recommend having it performed by operators specialised in grinding operations.

Maintaining the valve seat

Visually inspect the valve seats: there must be no pitting or cracks.

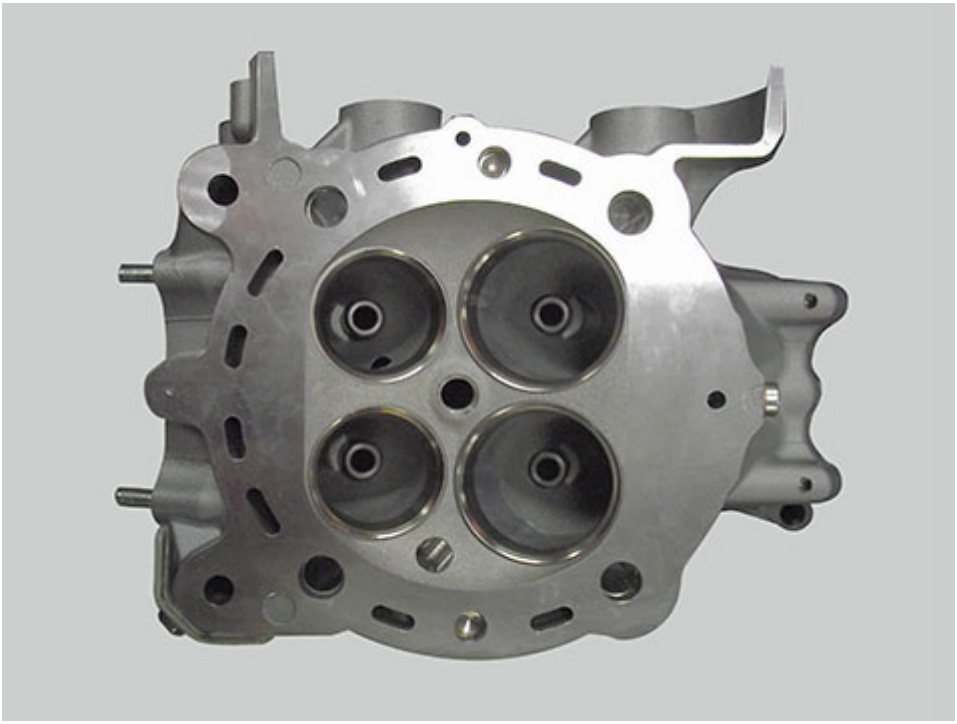

Minor damage can be repaired by grinding with special 45° and 60° single-blade grinders. Grind the valves and check the seal.

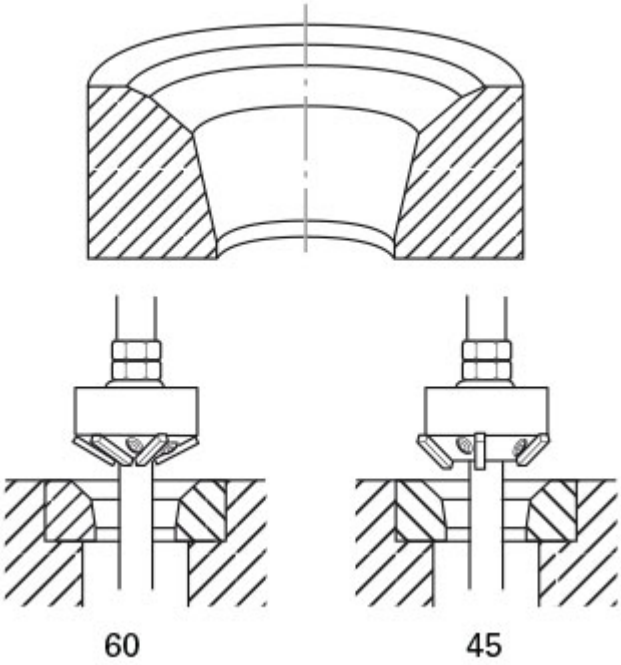

If the valve seats are excessively damaged, fit oversize seats. Replacement seats are available with 0.03 and 0.06 mm oversized outside diameters.

Warning
Check that there are no leaks by filling the intake and exhaust pipes with a suitable product. In case of leaks, check the repair quality with Prussian blue.

Important
When you change the valve seats, change the valve guides as well.

Proceed as follows.
Remove the worn seats, grinding carefully to avoid any damage to cylinder head housings.
Check the diameter of head housings and choose the oversized valve seat that will give an interference fit of 0.04 to 0.10 mm.

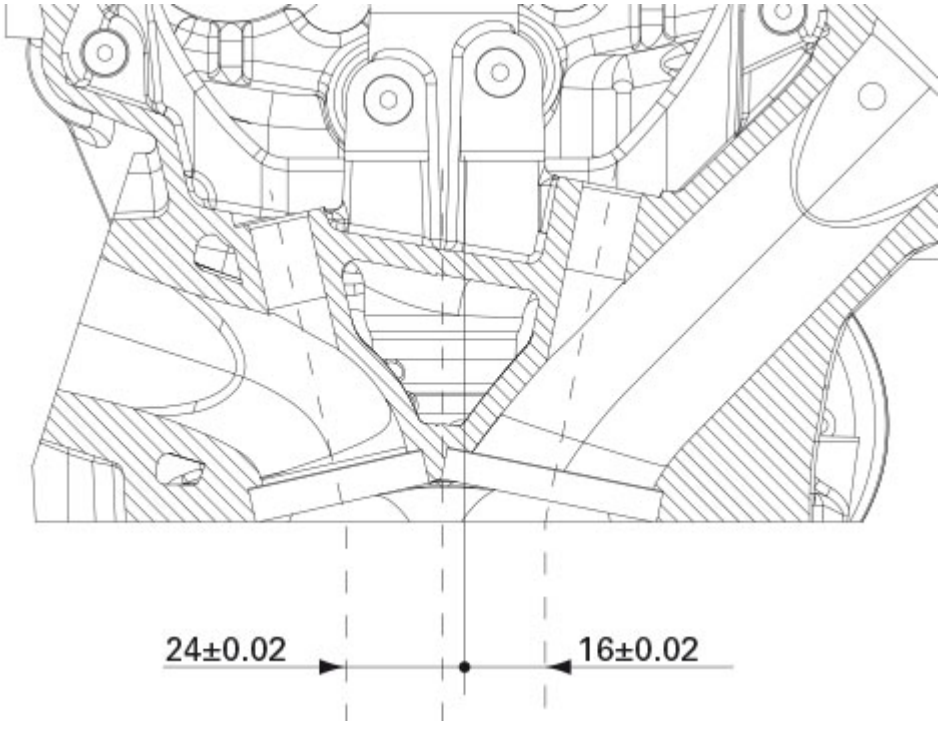

Heat the cylinder head gradually and evenly up to 150 °C and chill the new valve seats in dry ice.
Drive the seats perfectly square into the head housings using the appropriate valve guide seat installers

88713.2846 and 88713.2847.
Allow the cylinder head to cool down and grind the seats to the following dimensions: CA = Ø 41.6 ± 0.025 mm. CS = Ø 33.6 ± 0.025 mm. S = 1.2 mm. D = 0.2 to 0.4 mm.

Important
Do not use any lapping compound after final grinding.

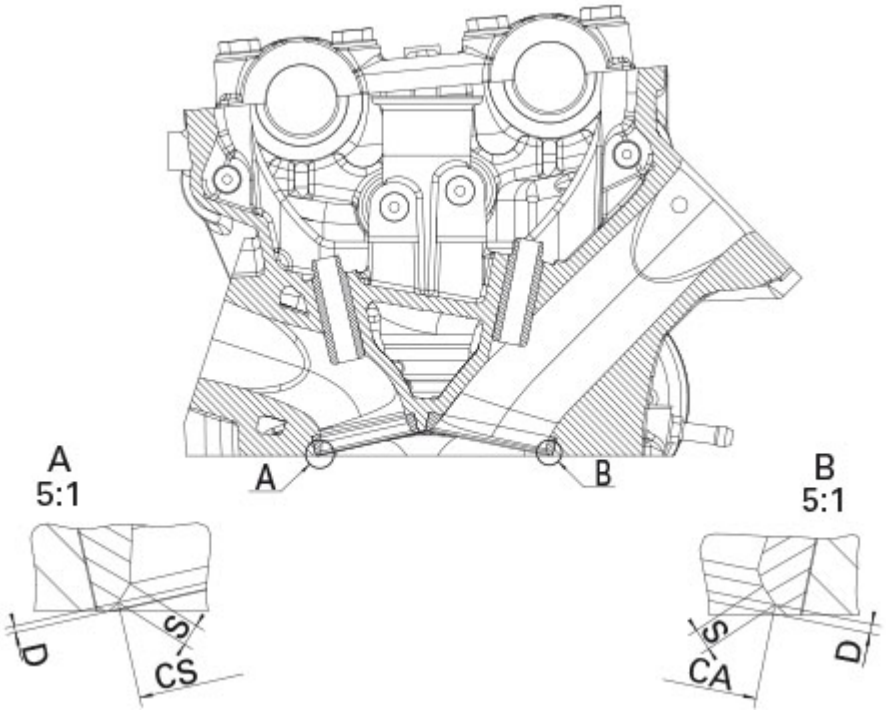

It is advisable to lap the radius between the intake valve seats and the intake ducts (F = before; G = after).

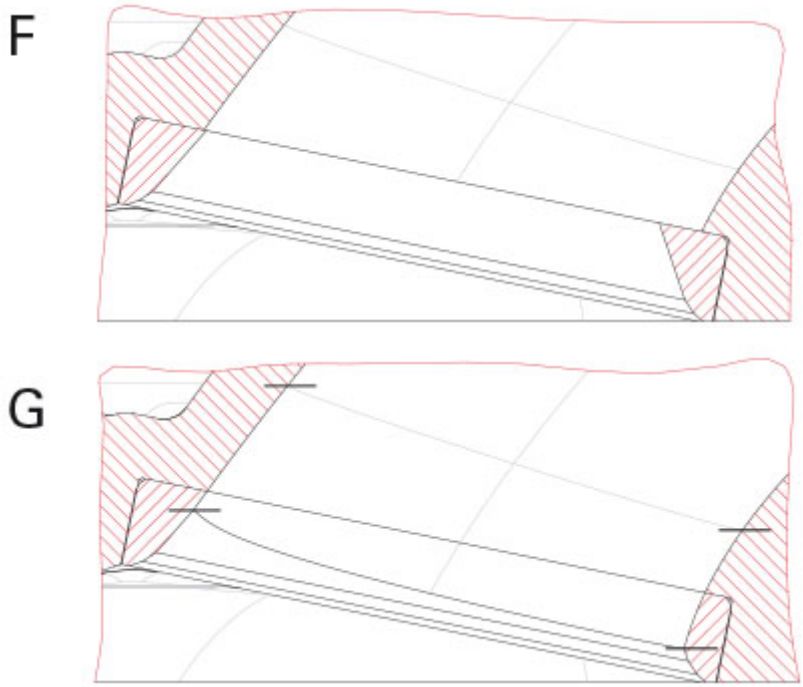

Valve guides

Check the internal surface of the valve guides: there should be no signs of deformation or cracking.

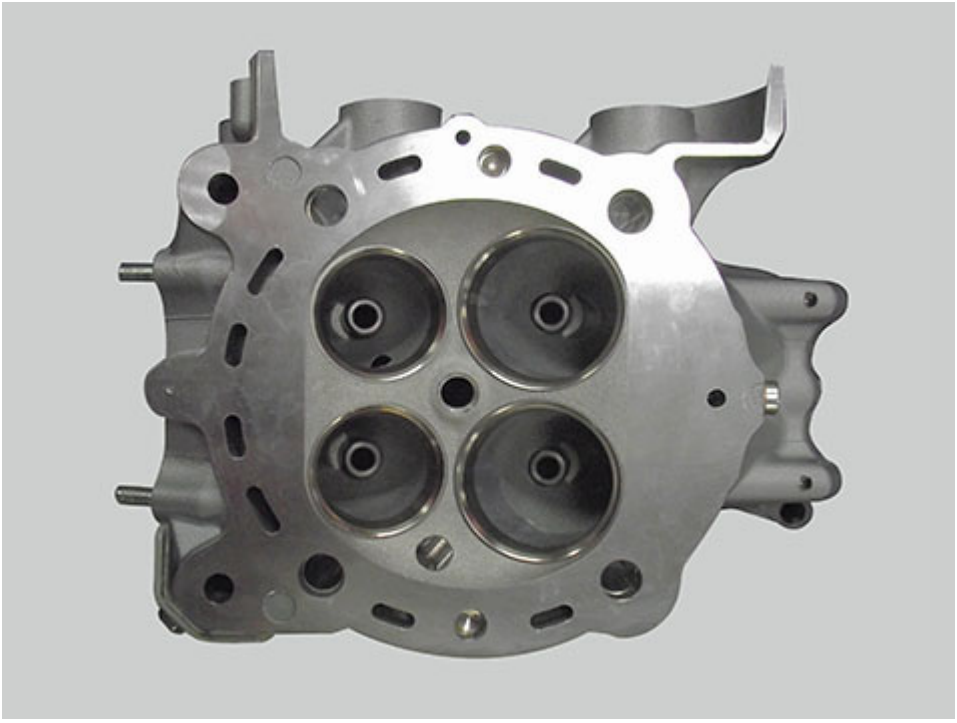

Thoroughly check the dimensions of the valve guide. Measure the inside diameter with a suitable gauge. Measure the diameter at different positions of the valve guide.

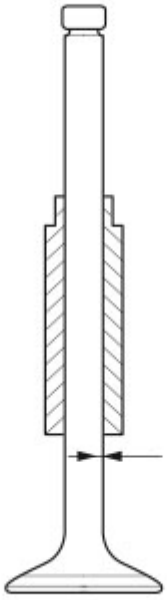

The clearance upon fitting must be: maximum detected value - minimum detected value = 0.03÷0.045 mm.
The maximum permissible wear limit is 0.08 mm.
Change the valve guides when the ovality exceeds permissible limit or the valve stem clearance is outside the tolerance range.
When you change the valve guide, you must also change the valve.
Valve guides as spare parts are available with outside diameter oversized by 0.03, 0.06 and 0.09 mm.
Change the valve guides as follows:

- heat up the cylinder head gradually and evenly up to 150 °C;
- remove the original valve guides using tool no. 88713.2842;
- allow the cylinder head to cool down and check the condition of the seats;
- choose suitable valve guides to obtain an interference fit in the cylinder head of 0.022 to 0.051 mm;
- heat up the cylinder head again and chill the new valve guides in dry ice;
- lubricate the seats in the cylinder head and install the valve guides using the appropriate service tools and with reference to the dimensions given in the figure;

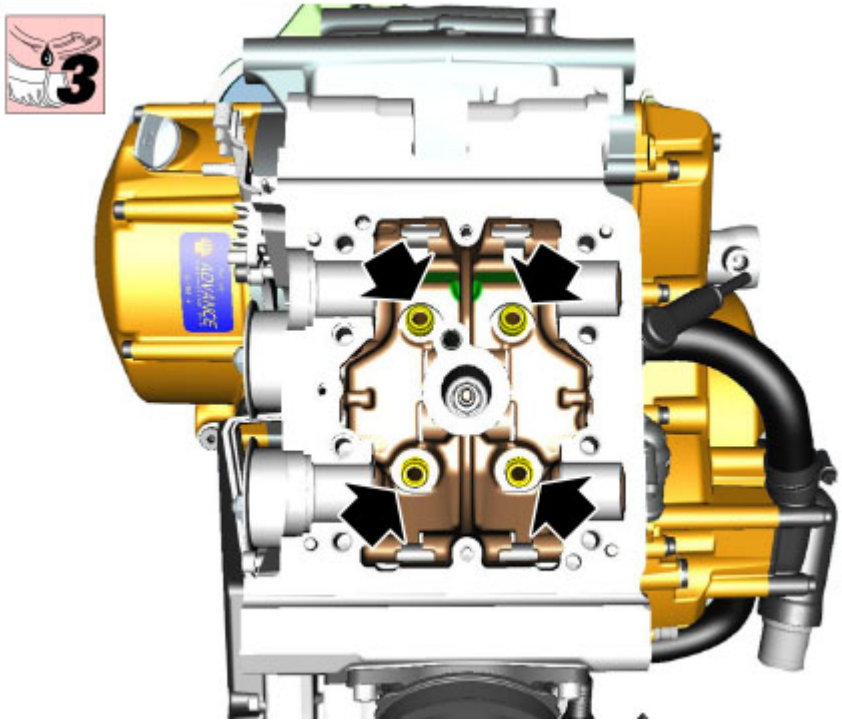

A= 22.4±0.15 mm
B= 28.45±0.15 mm

Hone the mating surface with a reamer.

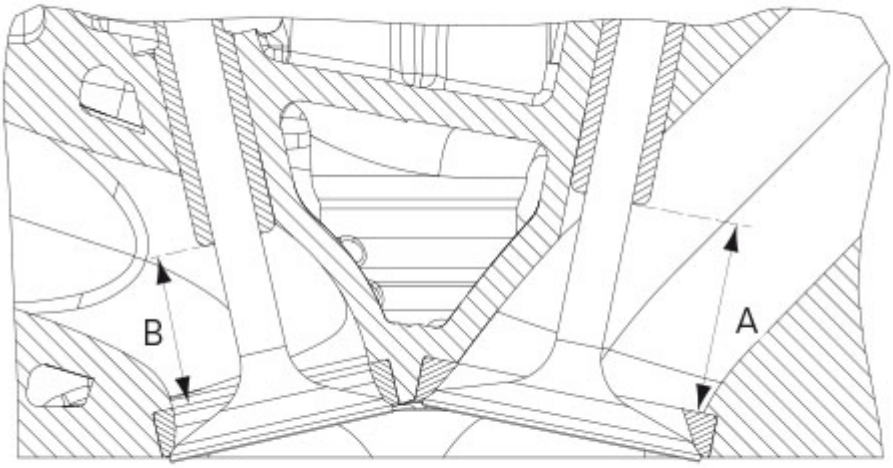

Checking the valve

Check that the stem and the valve seat contact surface are in good condition.
There must be no pitting, cracks, deformations or signs of wear.

Warning
The valves cannot be ground.



Perform the following checks.
Measure the diameter of the valve stem at various points along the section that runs in the valve guide.

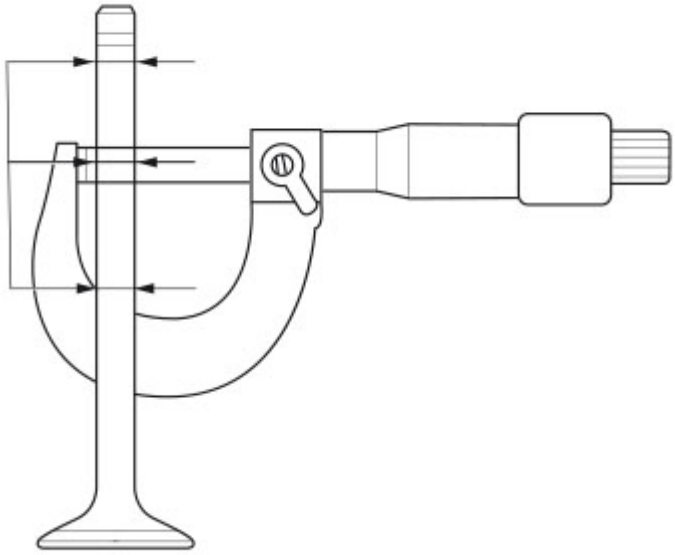

Check the valve stem for buckling. Place it on a "V" reference and measure deformation with a dial gauge.
Service limit: 0.053 mm.

Check the valve stem for buckling. Place the valve on a "V" reference block, set a dial gauge perpendicular to head and measure concentricity of valve face at 45°:

- nominal concentricity: 0.01 mm;
- service limit: 0.03 mm.

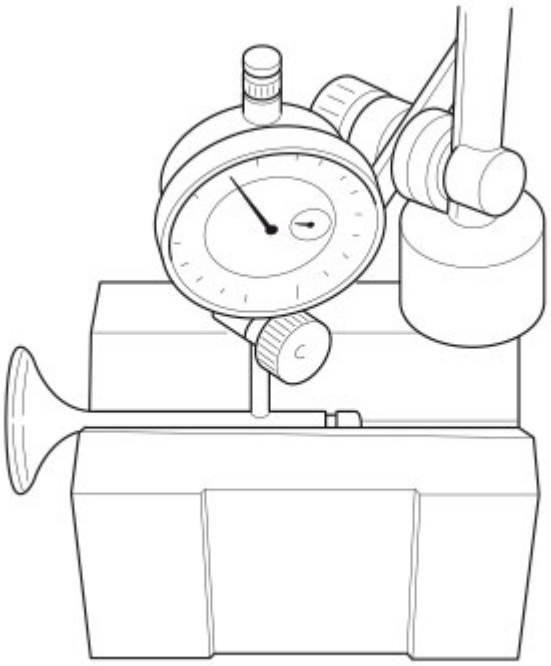

Use Prussian blue or a mixture of minium and oil to check that the contact surface (W) between valve and seat is 1.4 to 1.6 mm (1.05 to 1.35 mm when new). Grind the seat if the dimension measured is greater than the above limit.

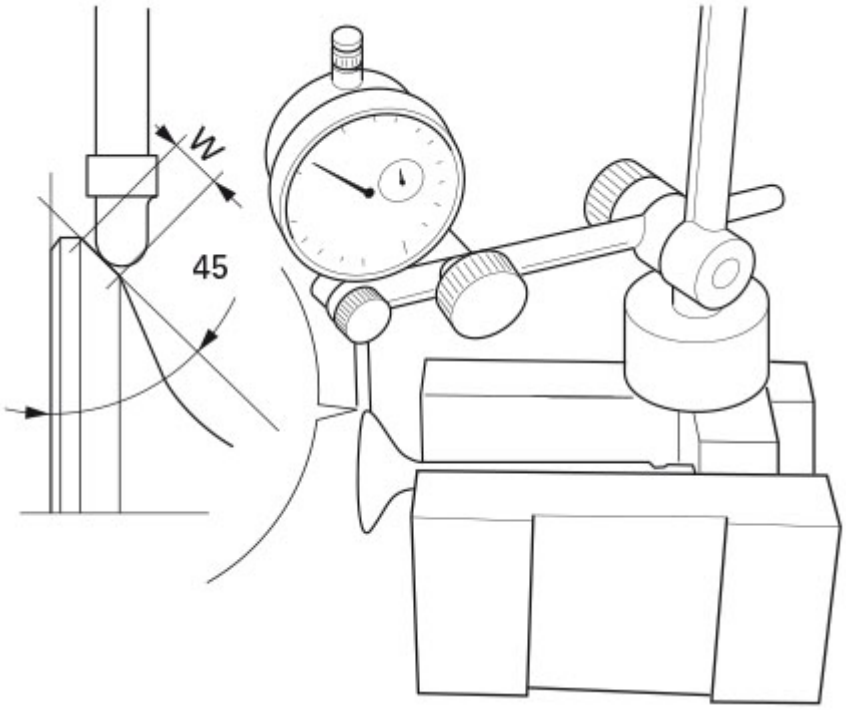

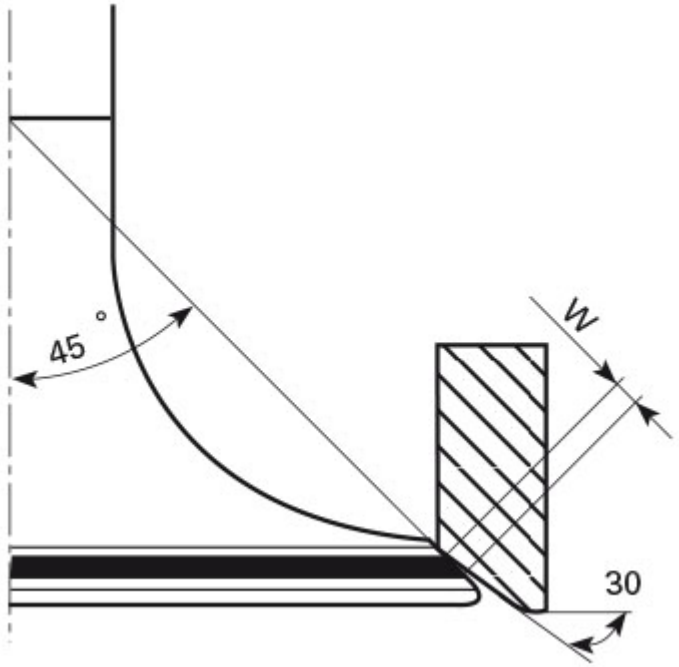

Checking the valve seal

After grinding the seats it is important to check the seal between valve face and seat: if the seat contact area (S) on the valve is wider than the 45° band (W) this could lead to poor sealing.

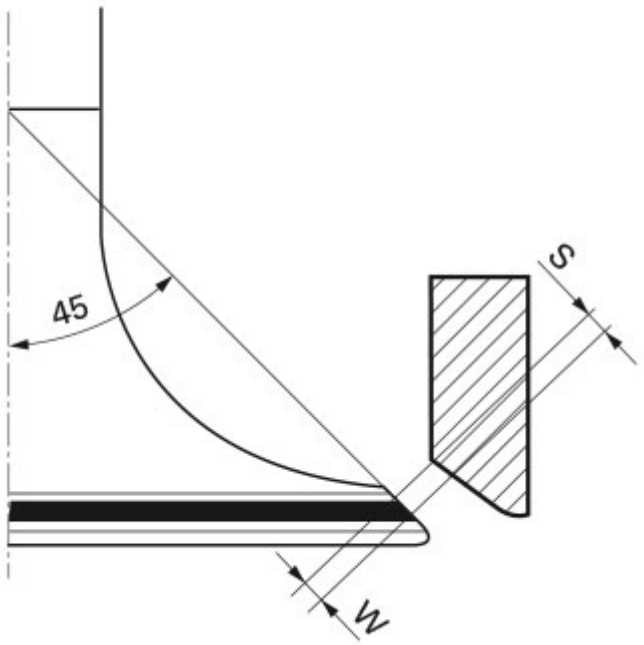

Checking the rocker arms

Check for signs of wear, grooves or chrome flaking off.
Check the condition of rocker arm bore and shaft.
Clearance upon fitting: 0.025÷0.049 mm.
Wear limit: 0.08 mm.

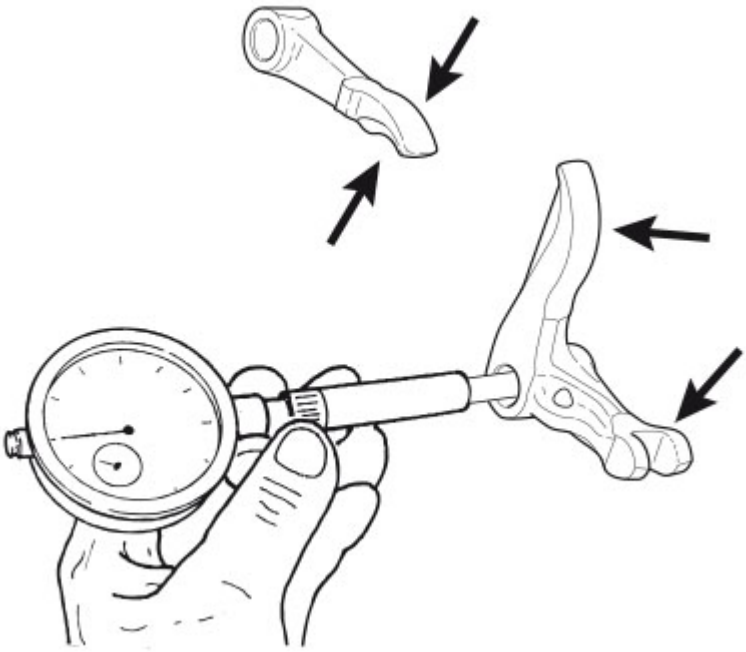

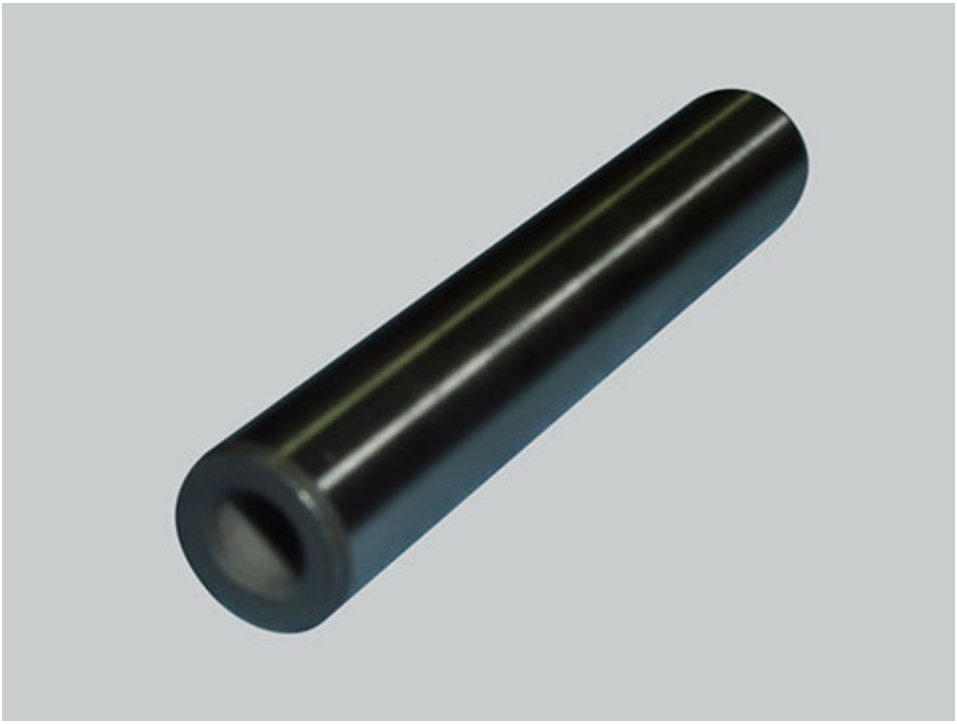

Opening and closing shims - Springs

Check the condition of the contact surfaces of the valve opening and closing shims (C): there must be no signs of wear.
Check the conditions of the return springs (D) of the closing rocker arms: no cracks, deformations or failure must be present.

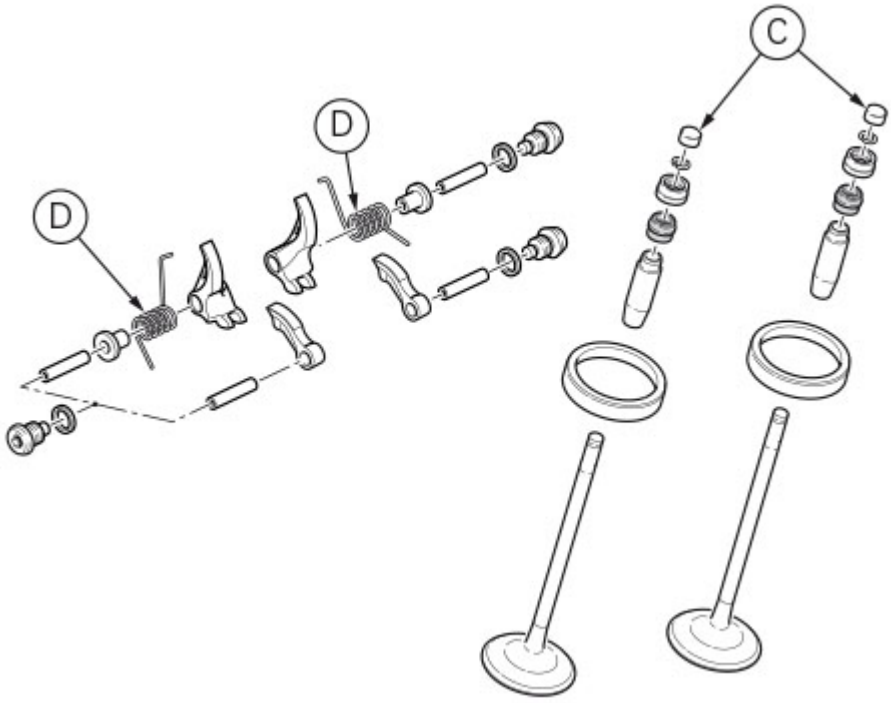
C
D
D

Removing the valve rocker arms

With the cylinder head in the condition described in the previous paragraph, remove the rocker arms.
Working on both sides, loosen plugs (1) and collect seals (2).

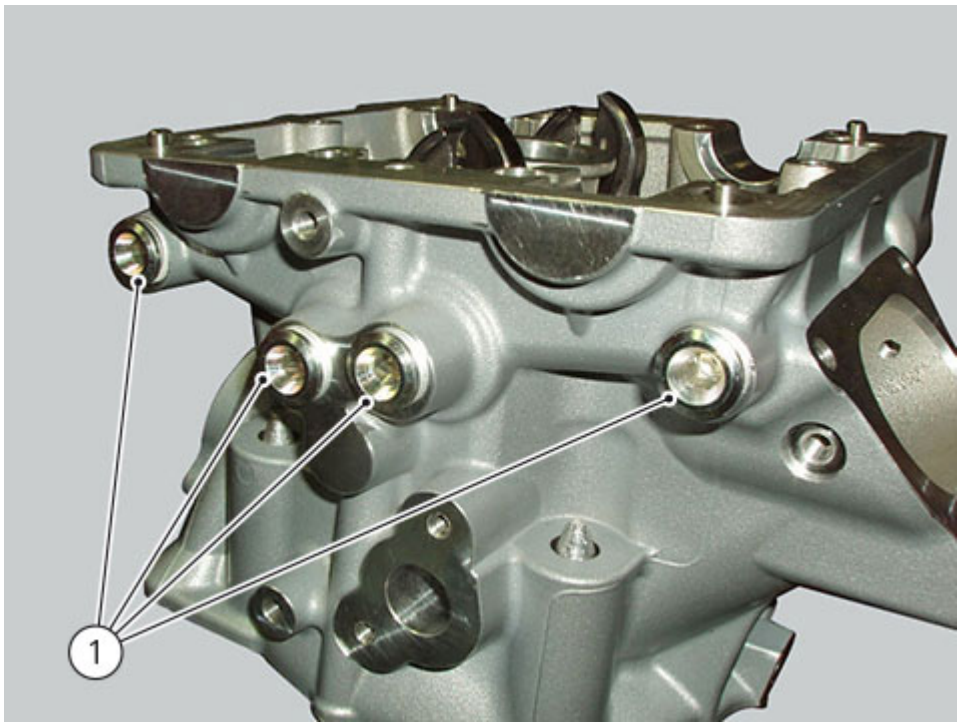

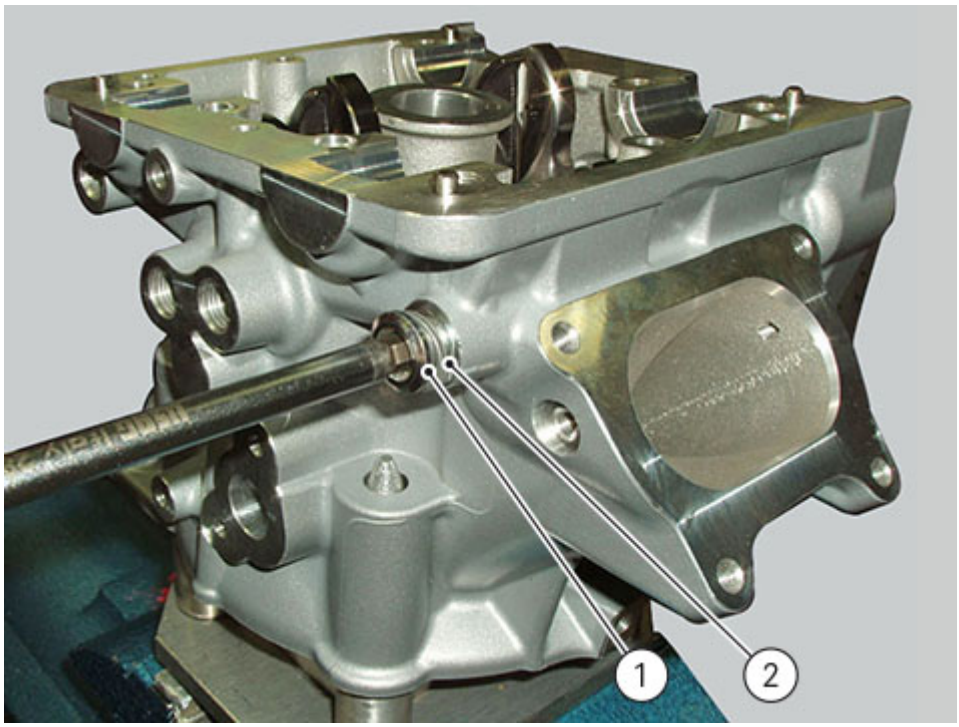

Using an M6 screw, withdraw the shafts (3) of the opening rocker arms (4) on the exhaust and intake sides.
Remove the opening rocker arms (4).

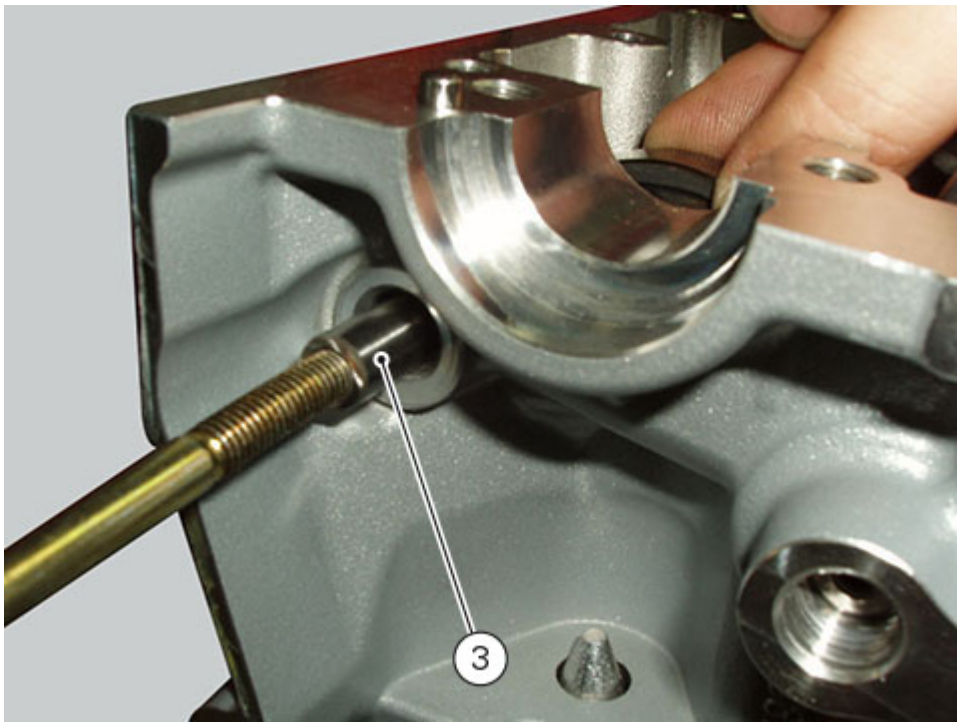
3

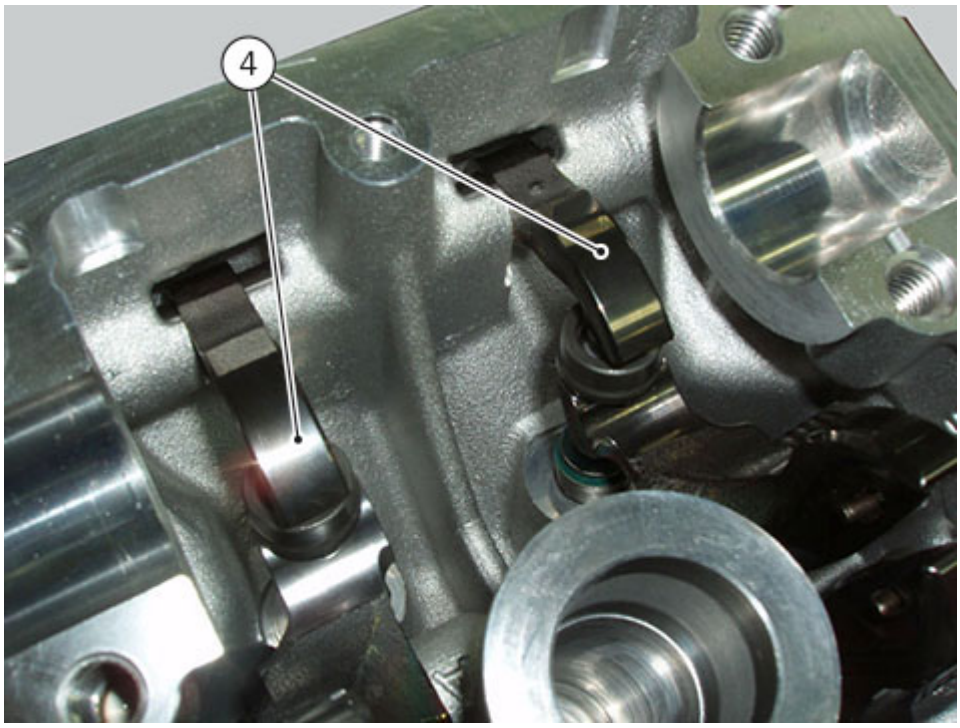
4

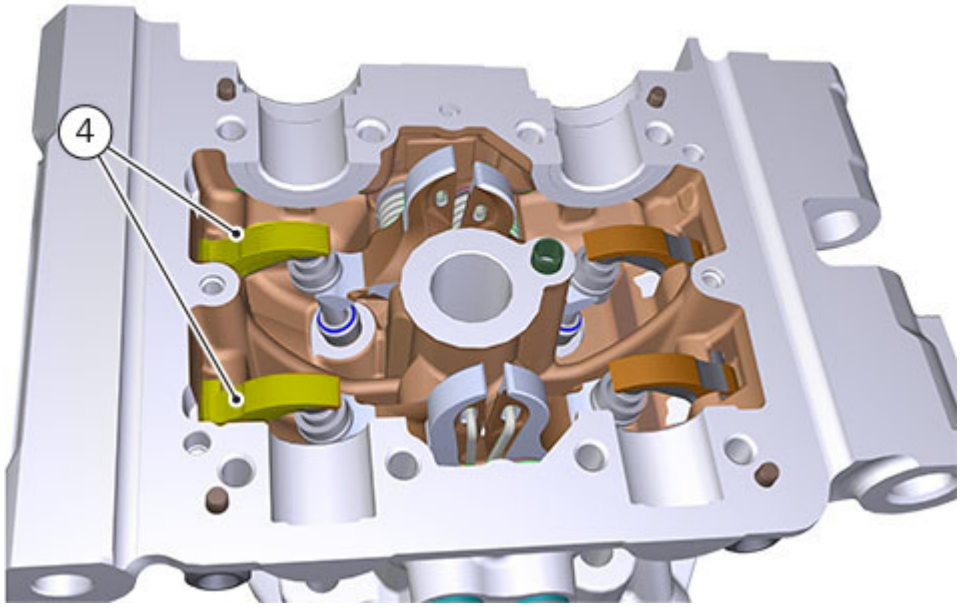

Using the pawl of the rocker arm spring tensioning kit no. **88713.2068** installed between the spring and the inner wall of the cylinder head, move the straight end of the rocker arm return springs (5) and (6) and insert it in the kit drilled rod.

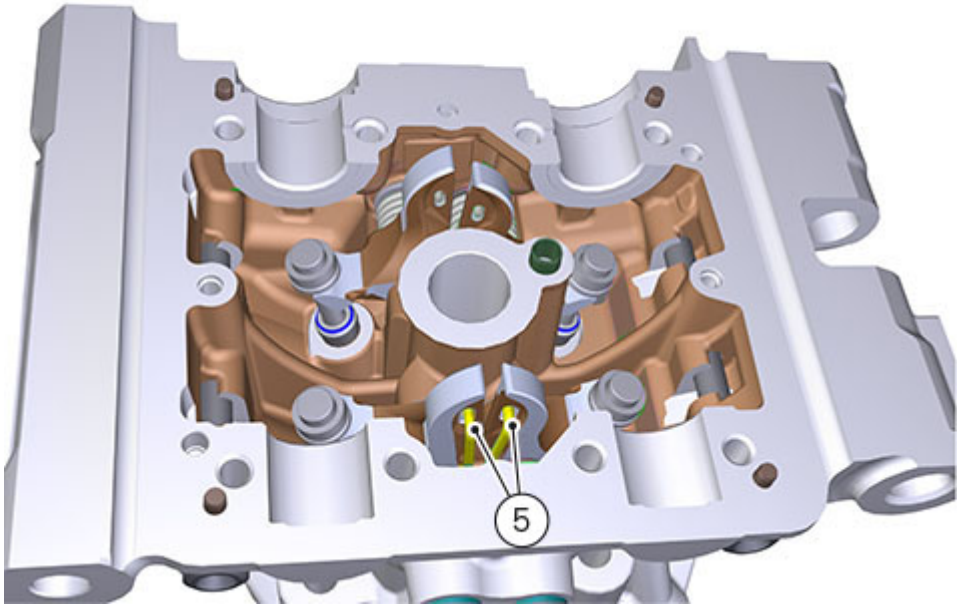

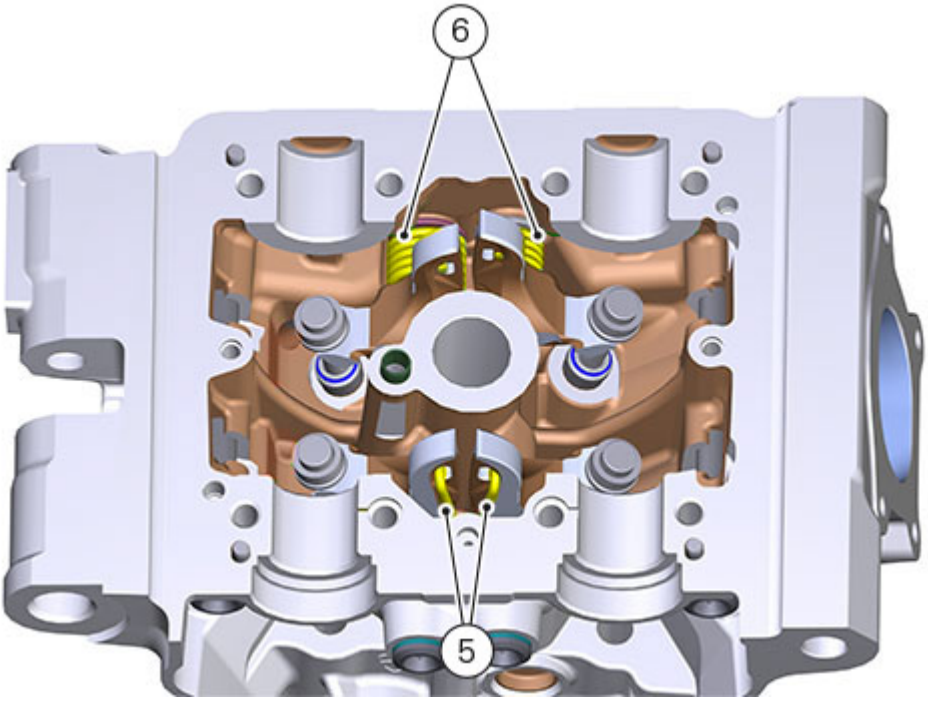

Use the kit shaft to slide the end of the spring into its rest position.
Using an M6 screw, withdraw the shafts (7) of the closing rocker arms on the exhaust and intake sides.

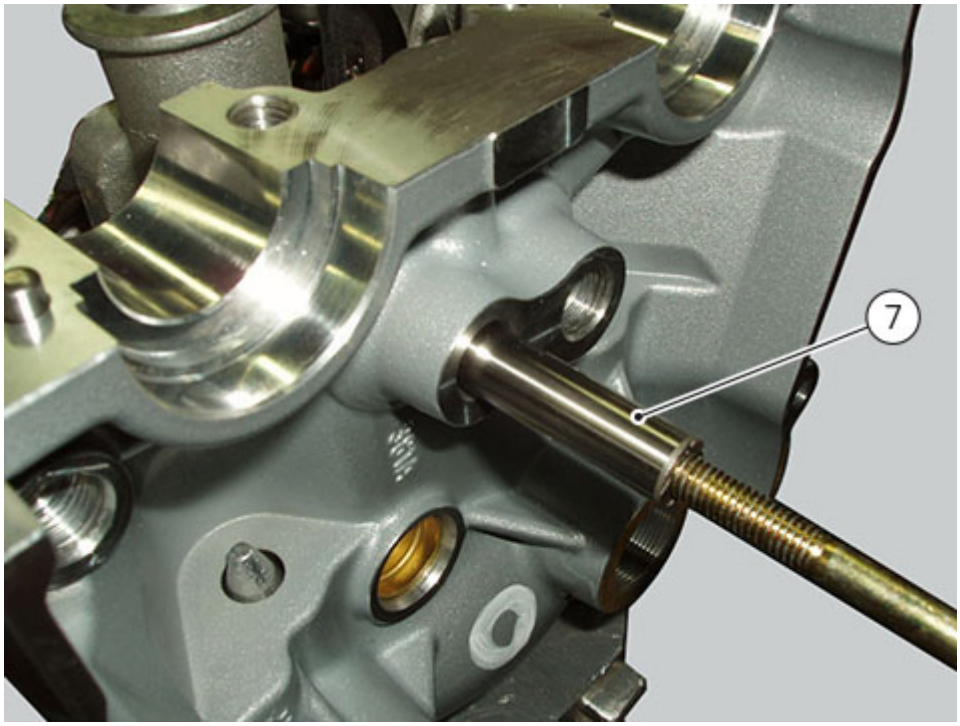

Remove the opening (12) and closing (13) shims.

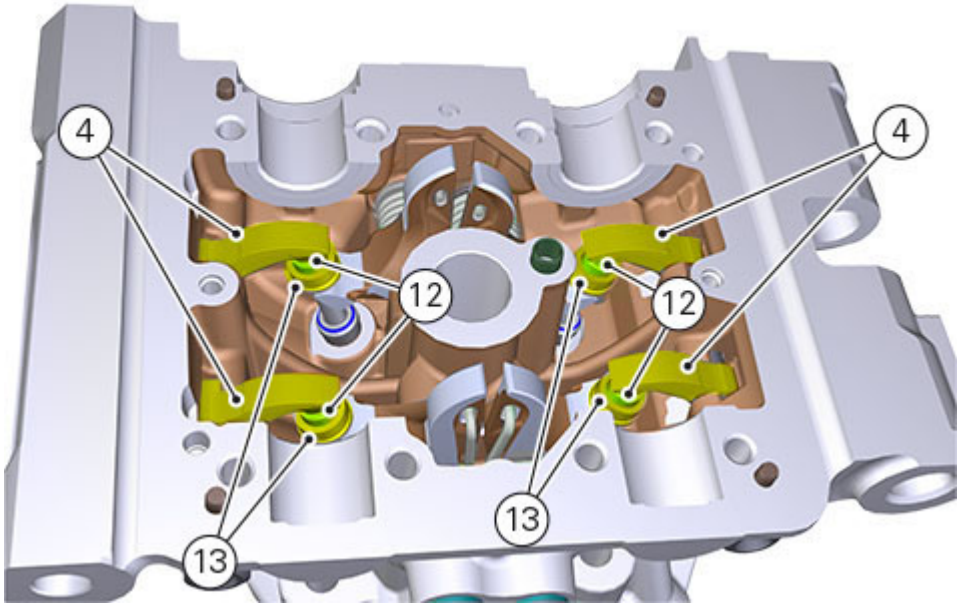

Remove the closing rocker arms (8) and (9), the springs (6) and (5) with the spacers (10).

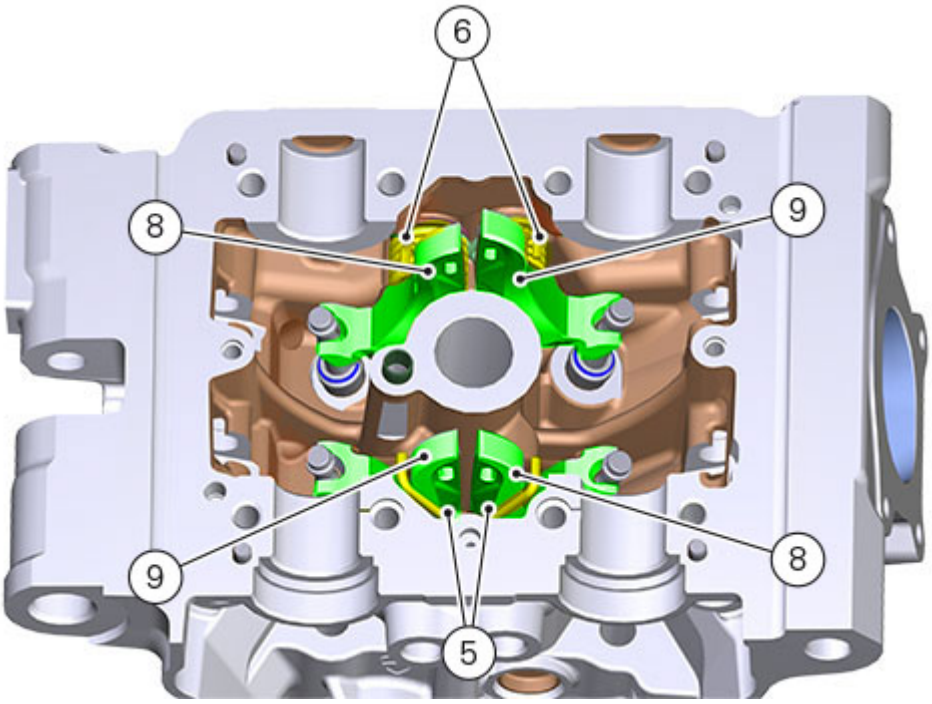

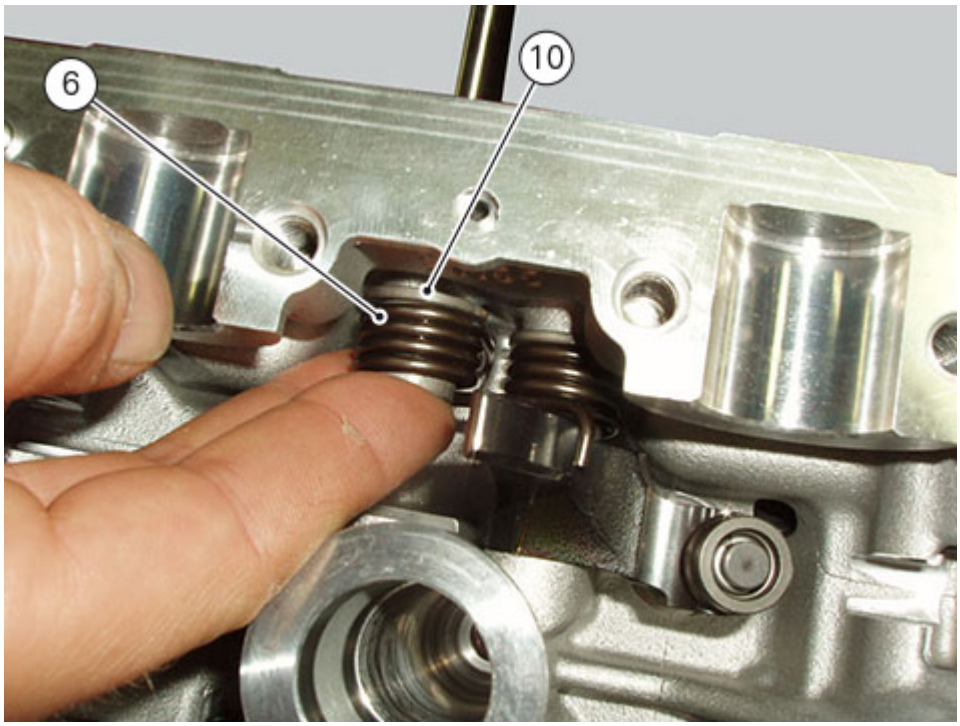

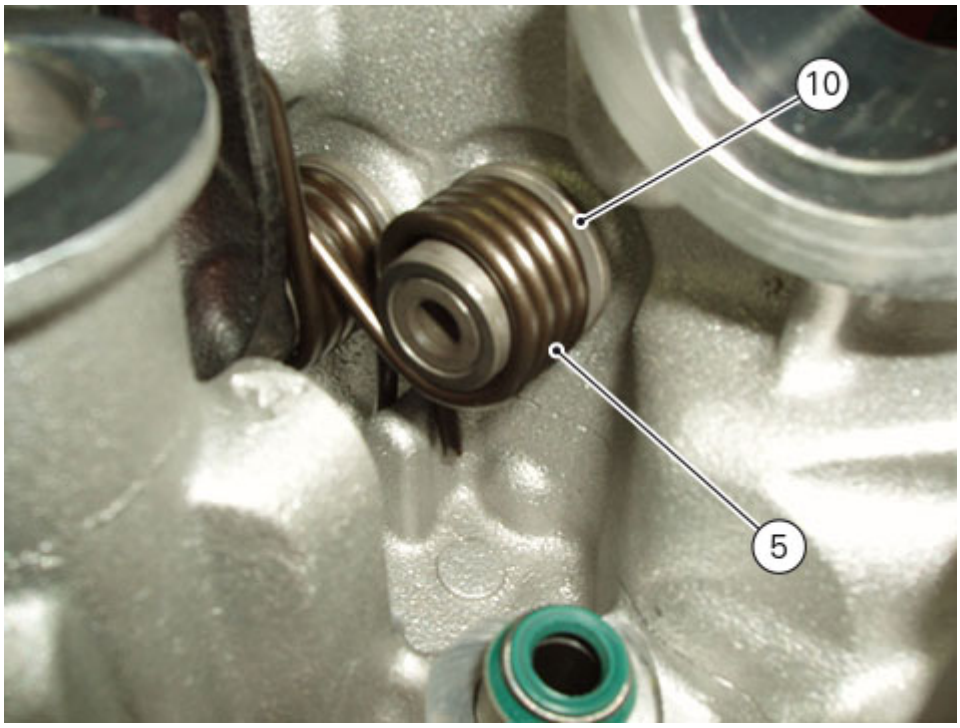

Remove the sealing rings (11) from the ends of the valve guides.

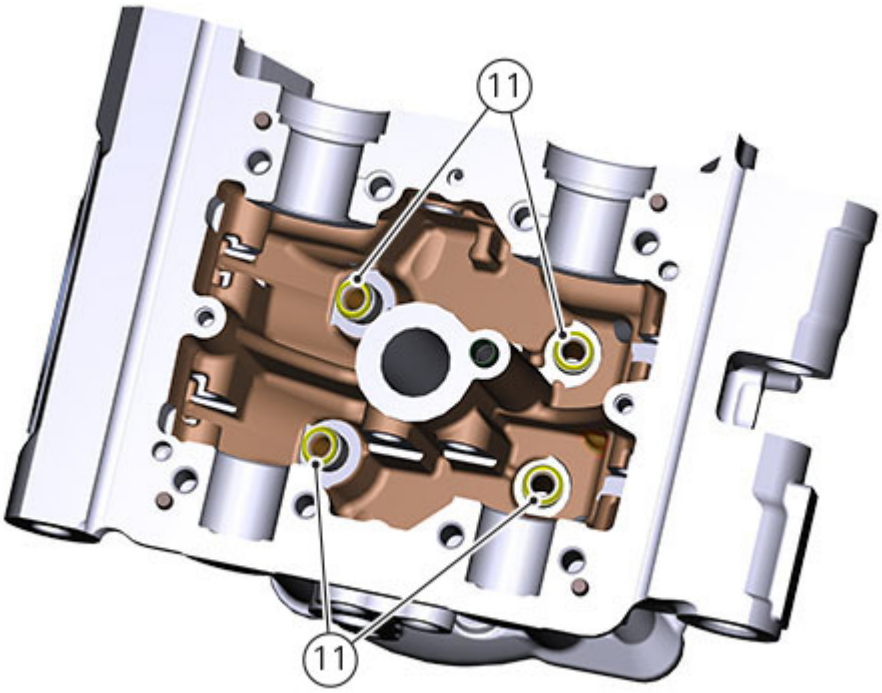

Repeat the same procedure for the other cylinder head.

Reassembling the closing rocker arms

Note
The closing rocker arm shafts feature a 10 mm diameter, whereas the opening rocker arm shafts feature a 9 mm diameter.

Check that the rocker arms are not scored or show signs of breakage in the area of contact with the camshaft and shim.
Using an M6 screw, position the closing rocker shaft (7) towards the exhaust side of the cylinder head.

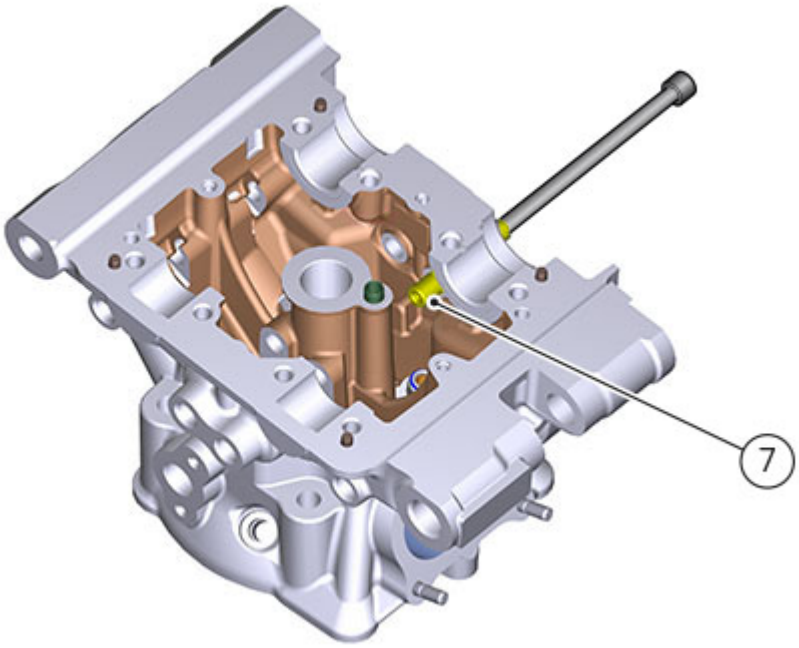

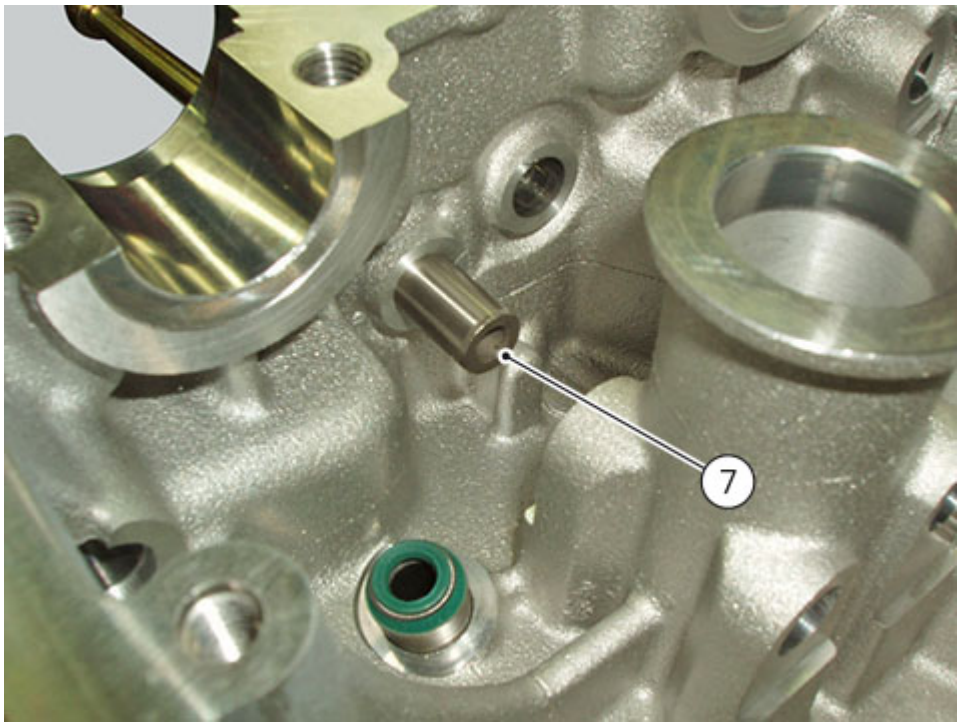

Locate the spacer (10) on the shaft.

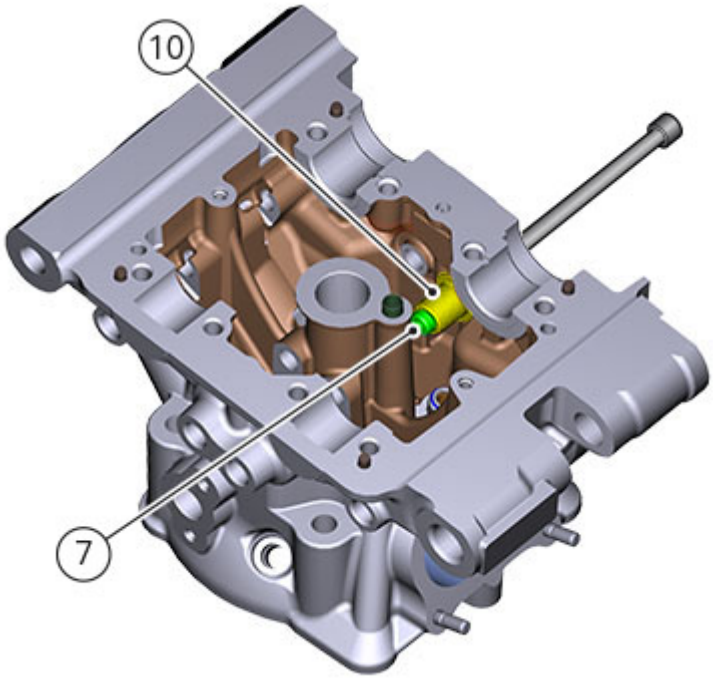

Locate the spring (6) on the spacer (10).

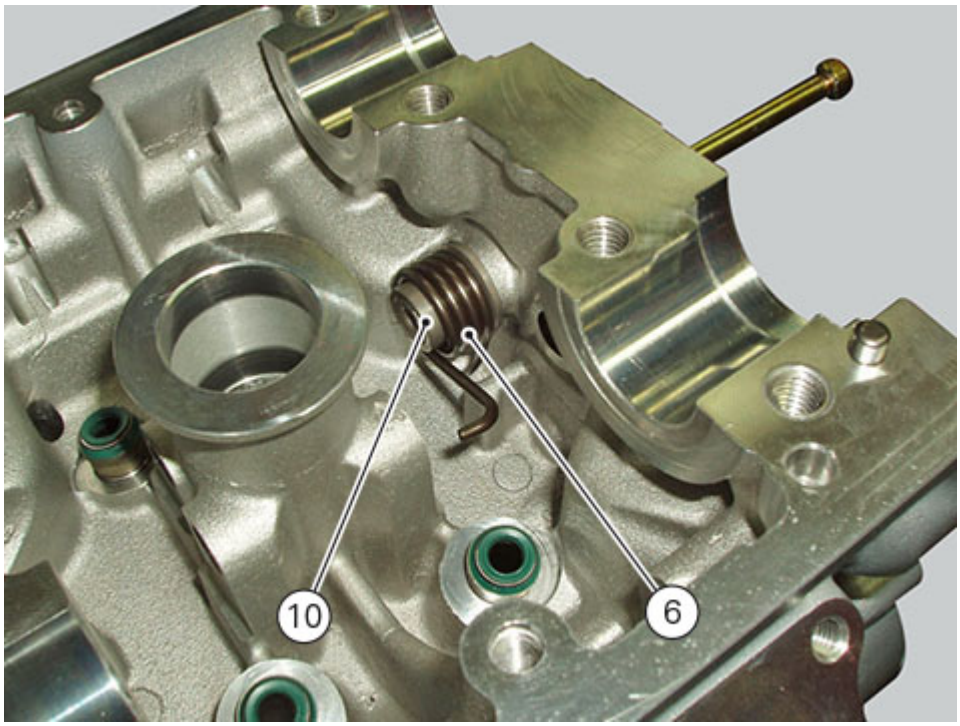

Locate the closing rocker arm (9) and drive the shaft home.
Proceed in a similar manner to install the closing rocker arm (8) with the spring (5).

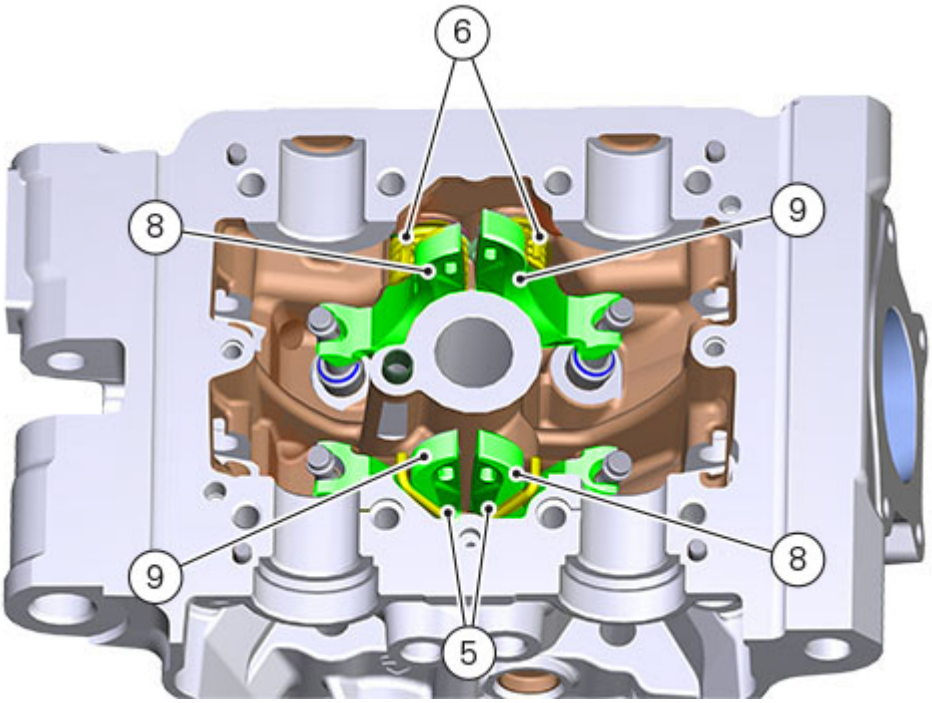

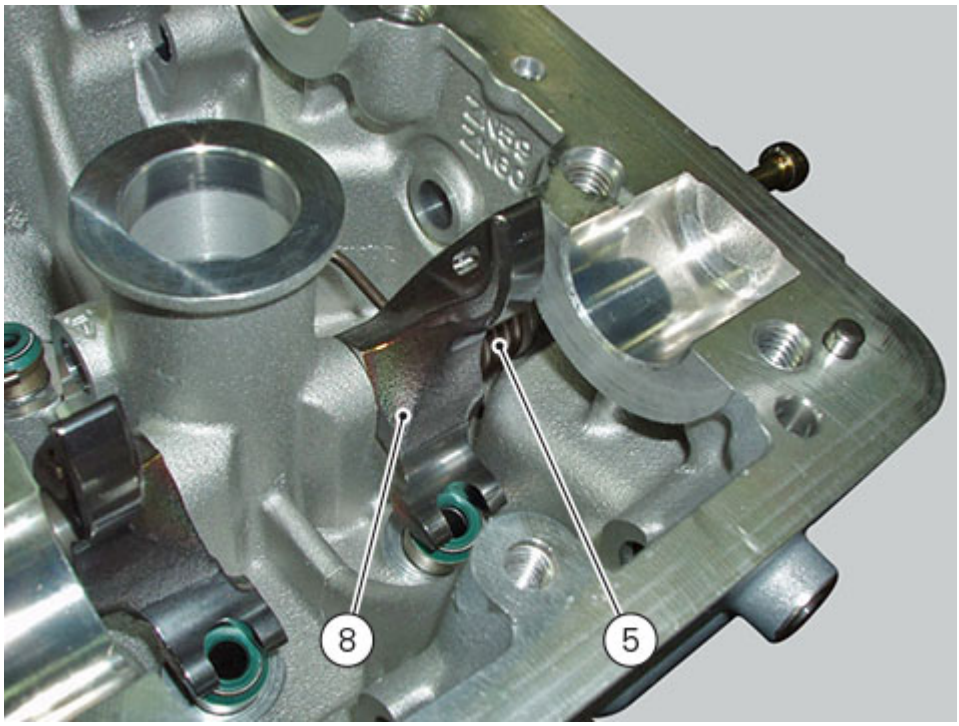

Load the springs (6) and (5) on the closing rocker arms (9) and (8) respectively using the tool no. **88713.2068**.

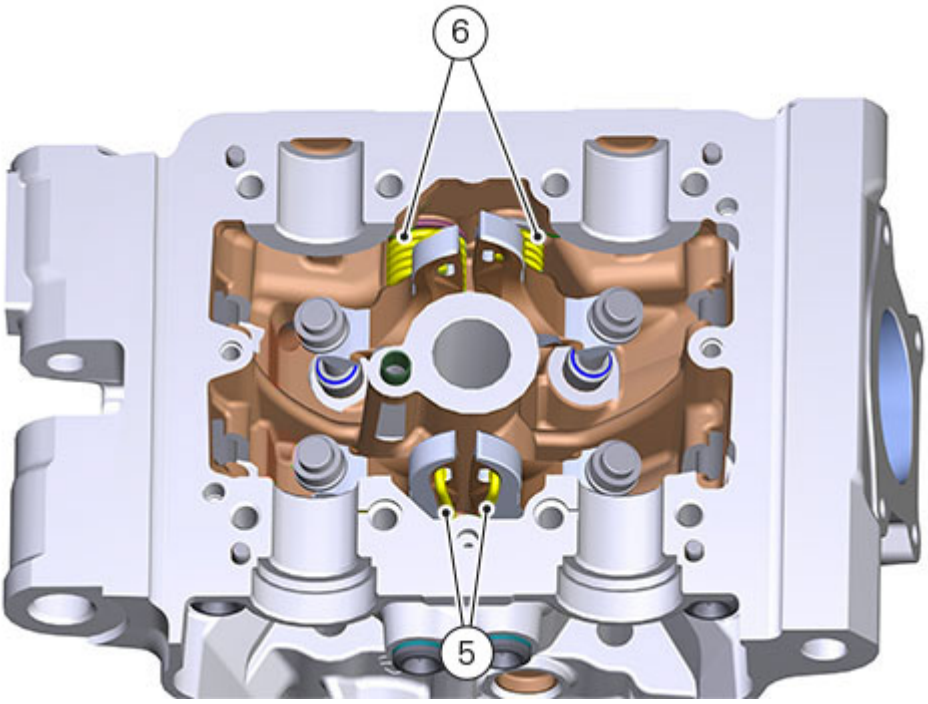

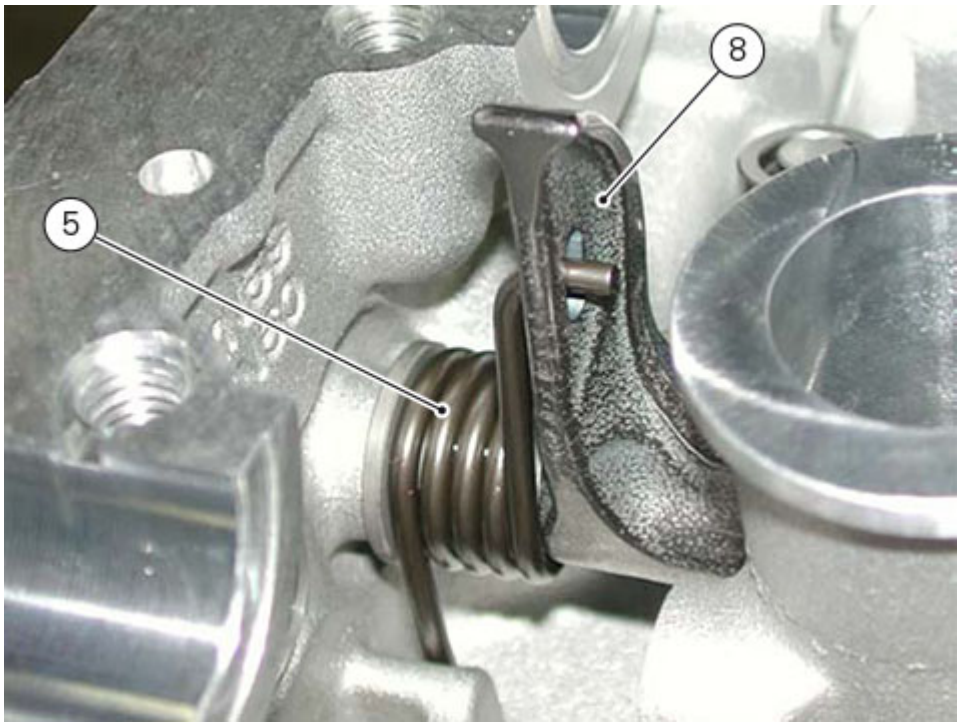

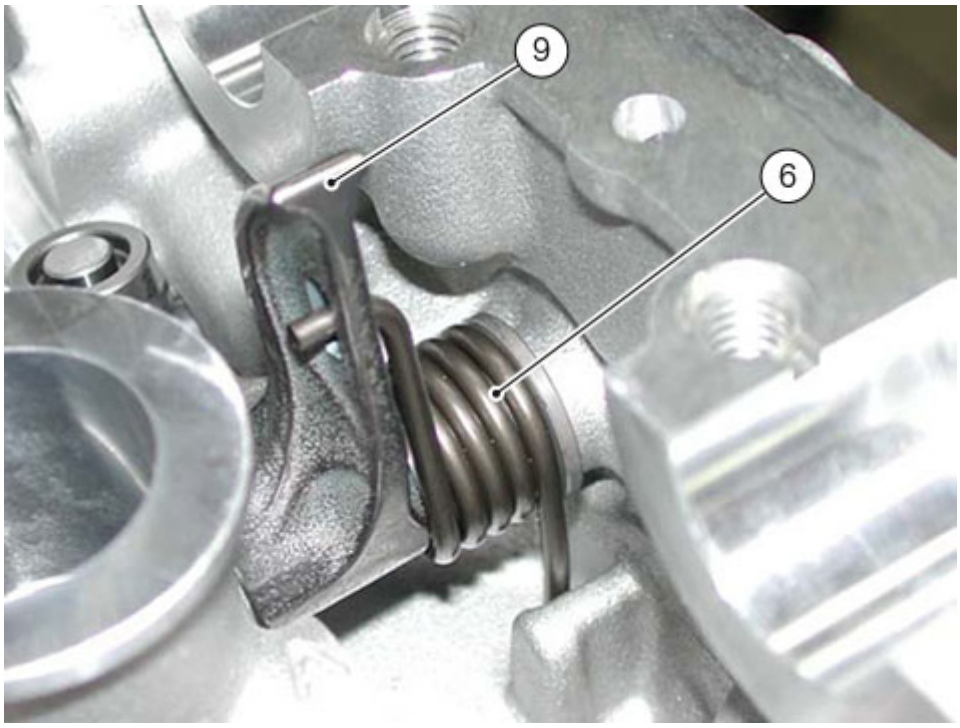

Note

Always install the closing rocker arms on the exhaust side before those on the intake side.

Warning

Take care not to damage the shoe of the closing rocker arm with the intake spring during assembly.

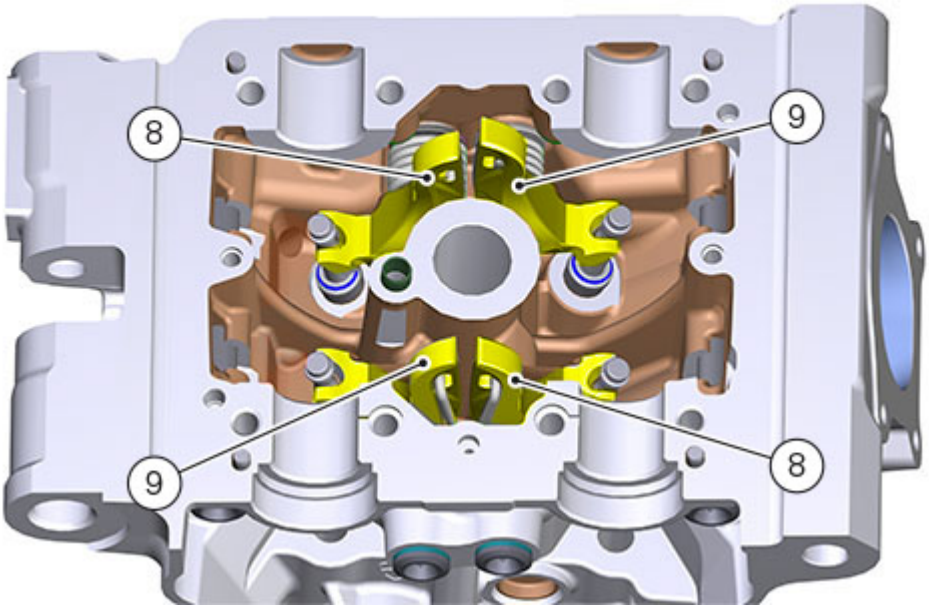

Refitting the opening shims and opening rocker arms

Using an M6 screw, position the opening rocker arm shaft (3) (diameter 9 mm).

Note
Always install the closing rocker arms on the exhaust side before those on the intake side.

Attention
Take care not to damage the shoe of the closing rocker arm with the intake spring during assembly.

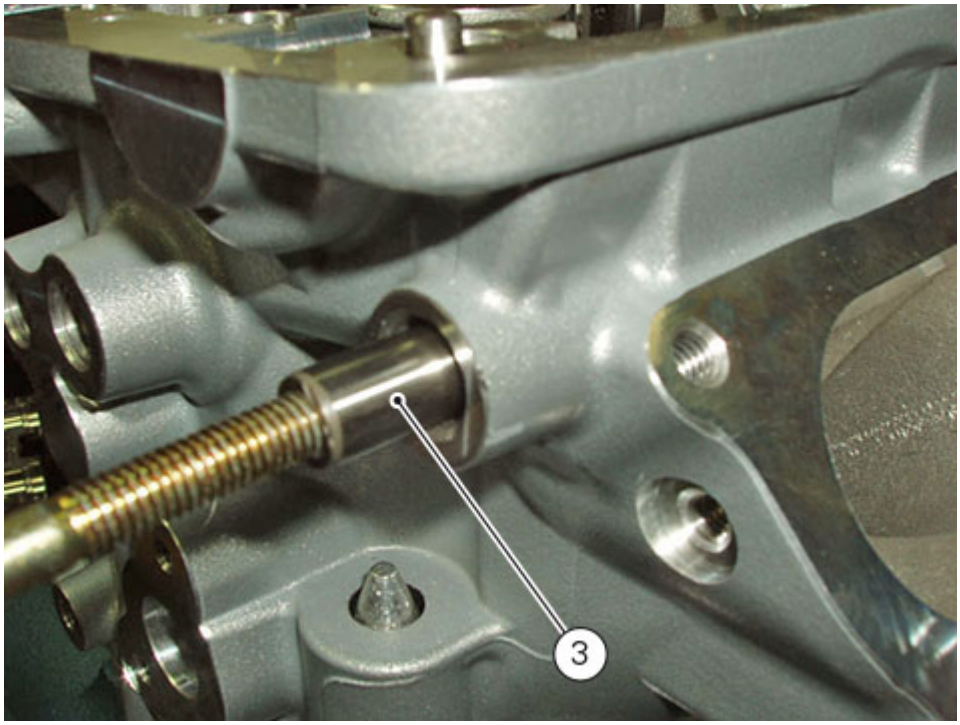

Locate the opening rocker arm (4) and drive the shaft home.

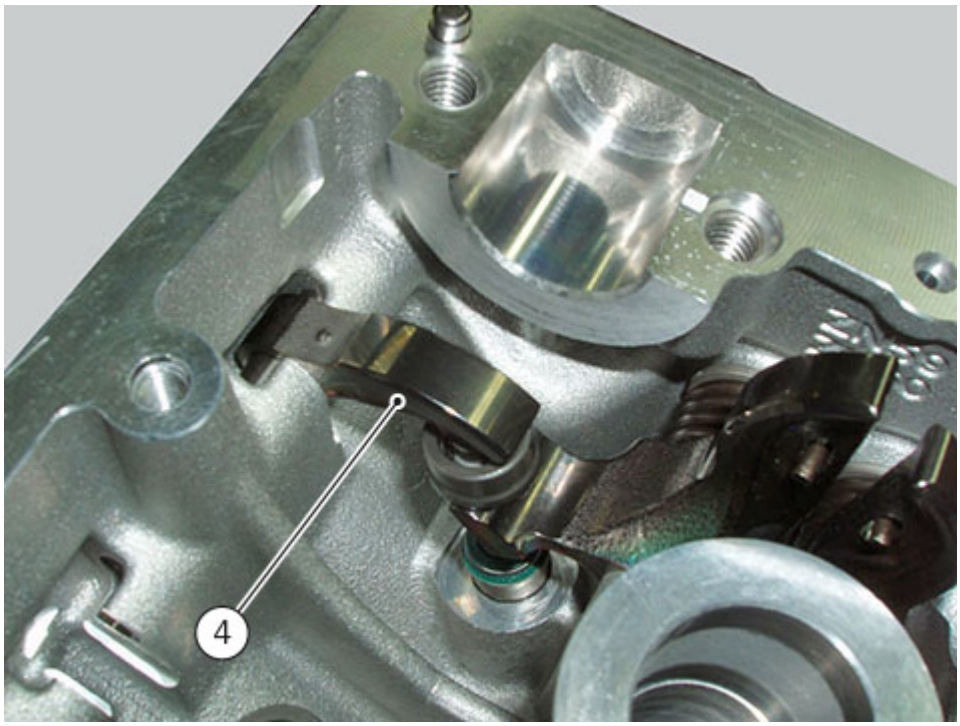

Install the four rocker arms (4) as described above.

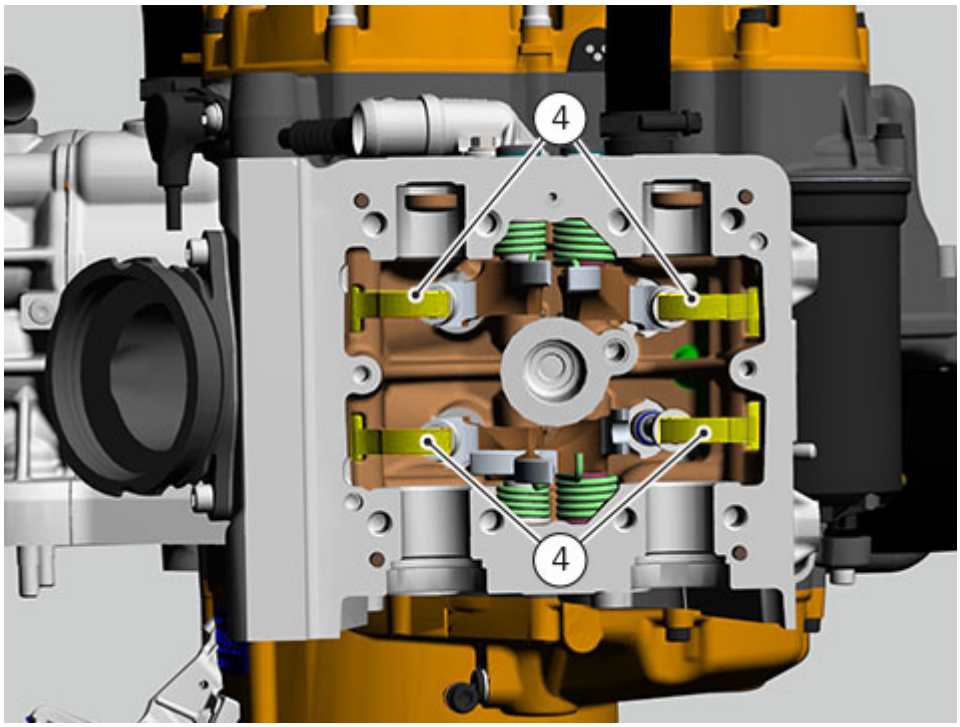

Lift the opening rocker arm (4) and install closing shims (13).
Install the opening shim (12) fully against the valve stem.

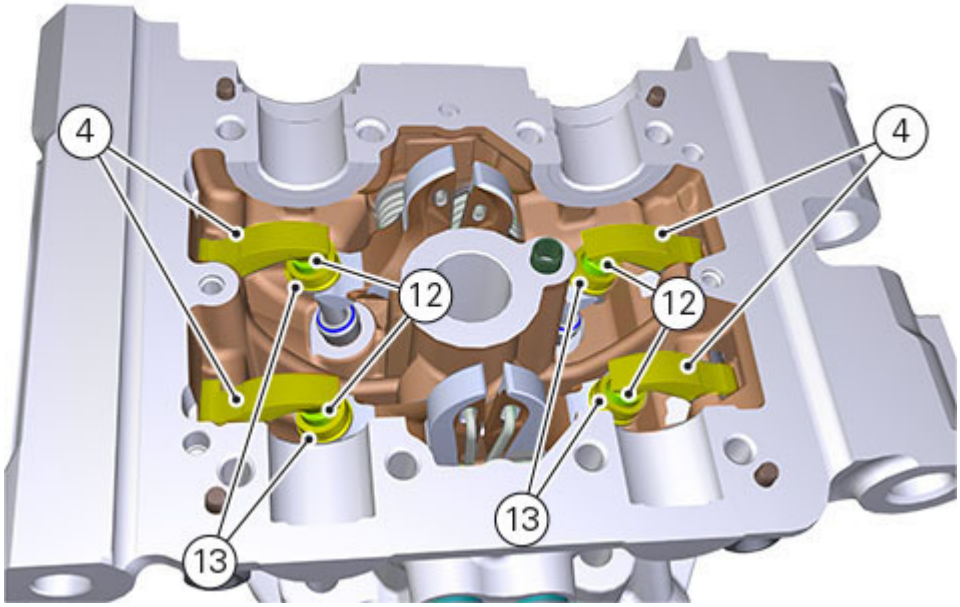

Release the rocker arm so that it rests against the shim.
Ensure the shim is correctly seated by lightly tapping the rocker arm shoe (A) with plastic mallet.
Refit the camshafts (Refitting the camshafts) and check the valve opening clearance (Checking and adjusting the valve clearance).

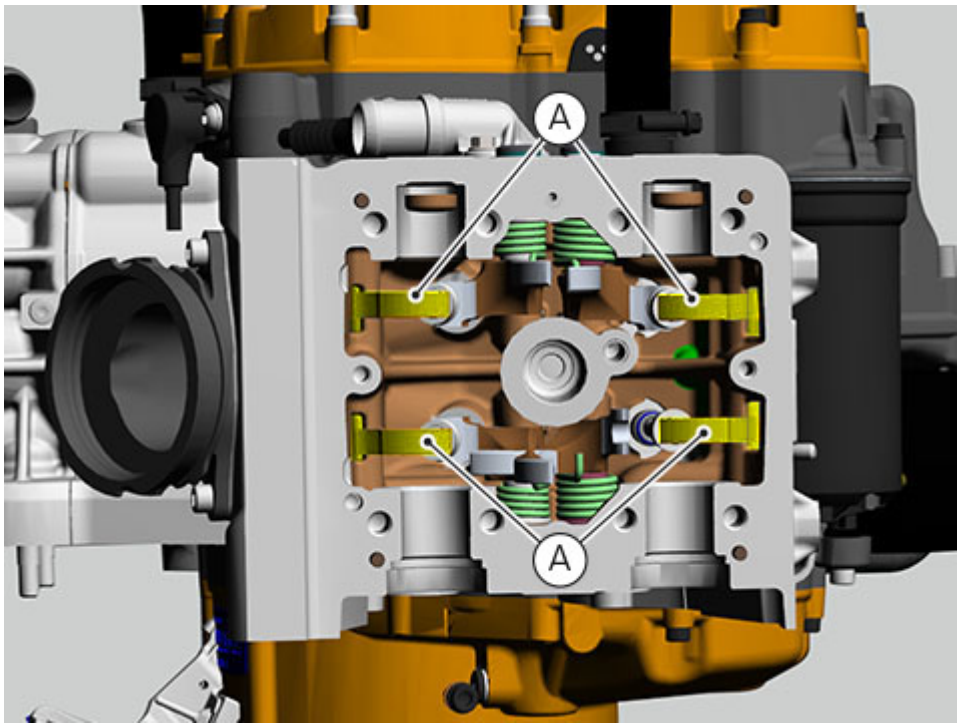

Insert the gaskets (2) on the plugs (1), orienting them (preferably) with the square edge side (T) facing the cylinder head.
Apply the recommended threadlocker on the plug (1) threads: apply the product on the first two plug threads, spreading it for the half circumference (about 180°).
Tighten the plugs to a torque of 15 Nm (Min. 14 Nm - Max. 16 Nm).

Note
After tightening, remove any excess of product.

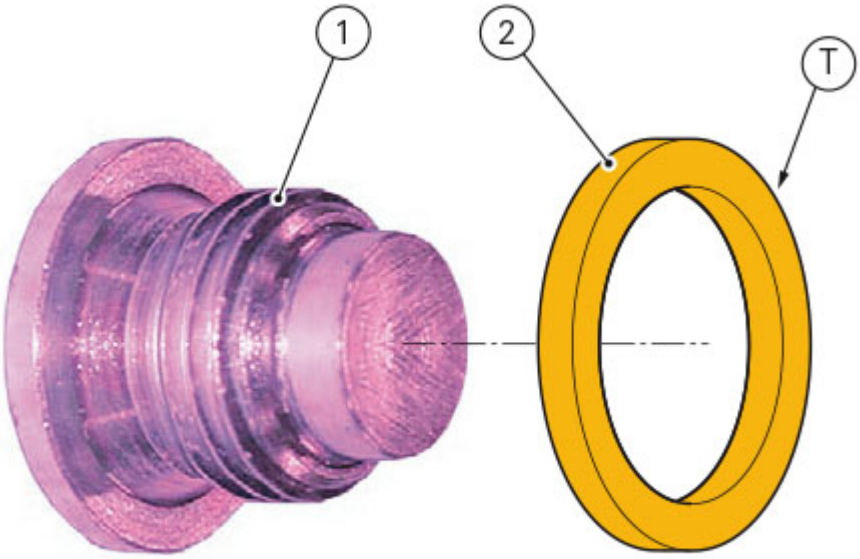
1
2
T

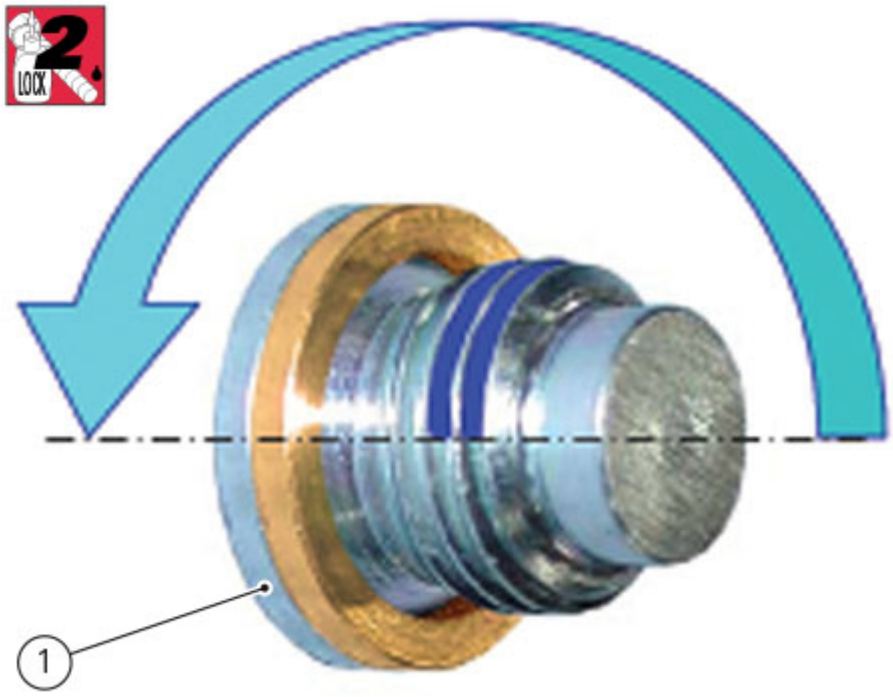
2.
LOCK
1

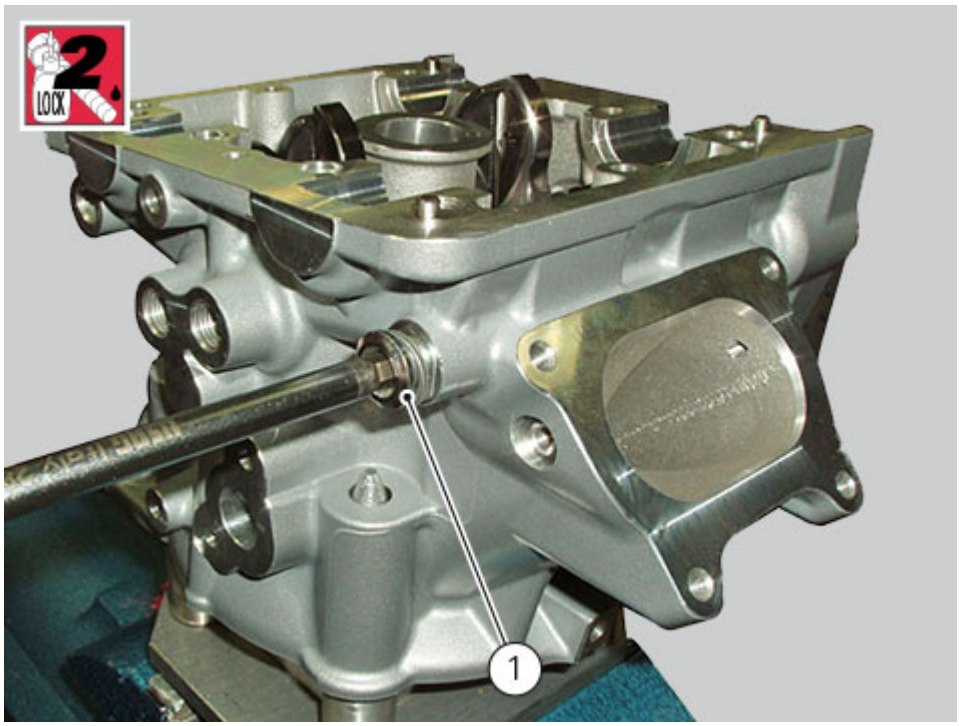

Refit the camshaft supports (Refitting the camshafts).
Refit the timing pulleys (Refitting the cylinder head pulleys/fixed tensioners).
Refit the cylinder head covers (Refitting the camshafts).
Connect the caps to the coils (Replacing the spark plugs).
Refit the complete head (Fitting the complete heads).

Removing the valves

Remove the complete head from the engine (Removing the engine heads).
Remove the timing pulleys (Removing the cylinder head pulley/fixed tensioner).
Disconnect the caps from the spark plugs (Replacing the spark plugs).
Slide out the secondary air pipe (Removing the secondary air system).
Remove the cylinder head covers, the camshaft supports and the camshafts (Removing the camshafts).

Raise the opening rocker arm (1) and remove the opening shim (2) from the valves with a pair of pliers.

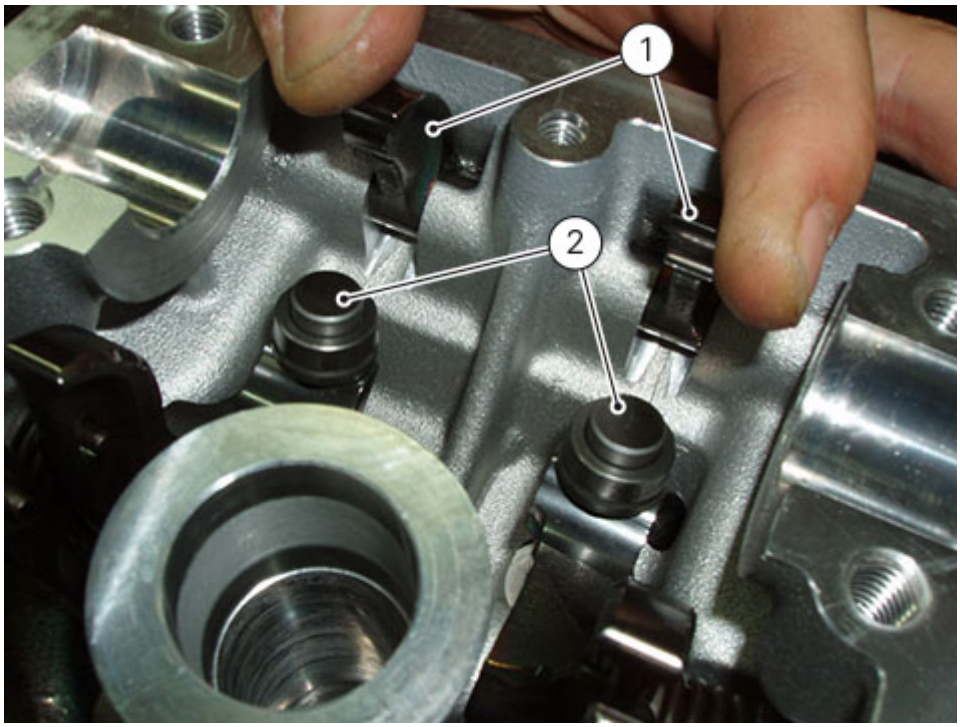

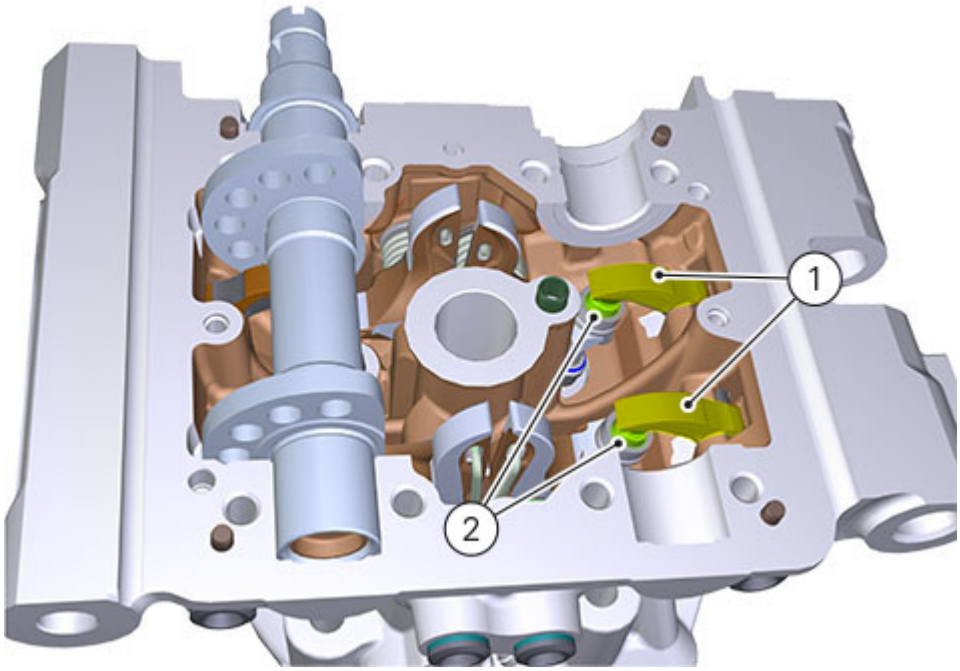

Push down the closing rocker arms (3) and (4) and the closing shim (6).
Remove the split rings (5) from the valves with a magnetic screwdriver.
Extract the closing shims (6) from the valve using a pair of pliers.

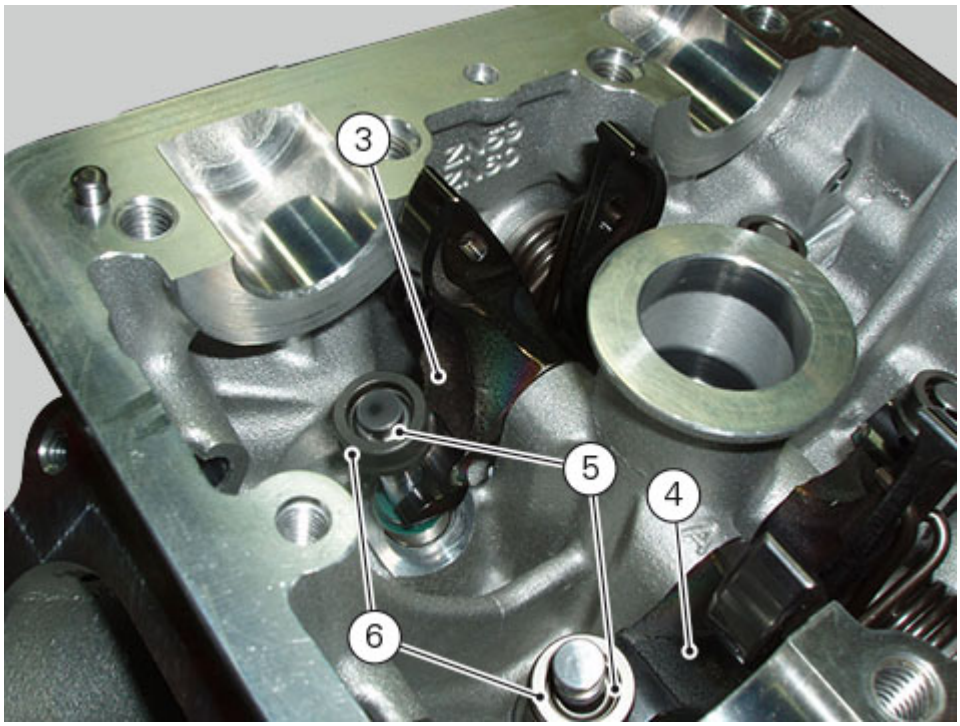

Withdraw the valves (7) and (8) from underhead of the cylinder head.

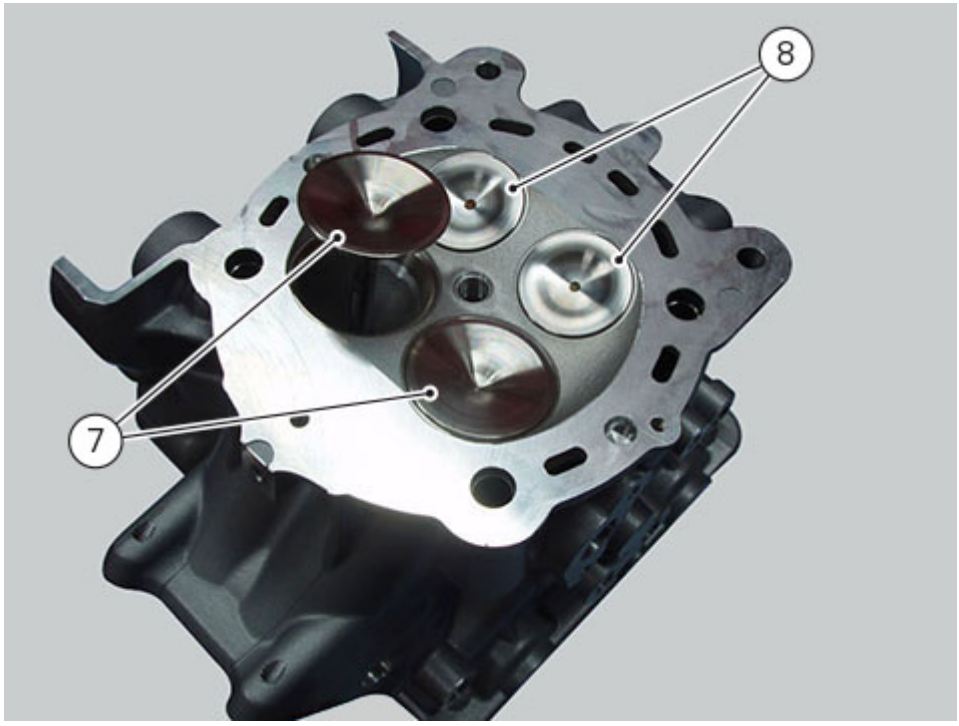

Repeat the same procedure for the other cylinder head.

Refitting valves, closing shims and split rings

Note
Before fitting the previously removed components, check the conditions of the shims as described.

Closing shims
Reset the dial gauge (C) and position stylus (D) on surface (E) of inspection gauge (F).
Insert the closing shim (2) fully against the inspection gauge, as shown in the figure.
Measure the shim thickness by placing dial gauge stylus on the shim surface.
Rotate the shim to take the measurement on different points. The difference between the thicker and the thinner part must not exceed 0.02 mm.

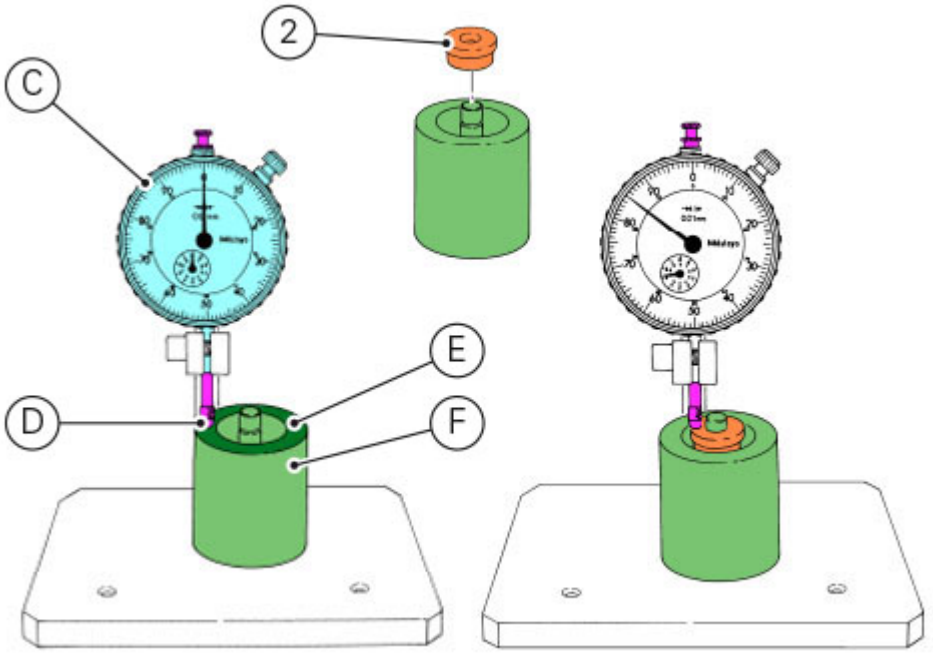

Opening shims
Reset the dial gauge (C) and position stylus (D) on surface (G) of inspection gauge (F).
Insert the opening shim (6) fully against the inspection gauge, as shown in the figure.
Measure the shim thickness by placing dial gauge stylus on the shim surface.
Rotate the shim to take the measurement on different points. The difference between the thicker and the thinner part must not exceed 0.02 mm.

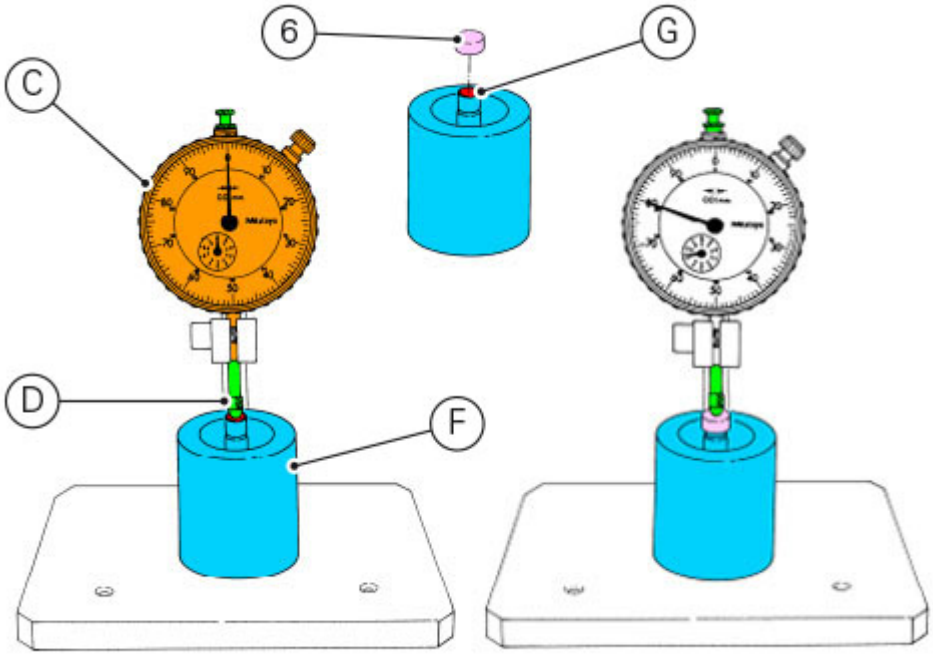

Carefully clean the two intake valve seats (A) and the two exhaust valve seats (B).
Lubricate the stems of the two intake valves (7) and the two exhaust valve stems (8) with engine oil.
Fit the valves in their seats on cylinder head, fully home.

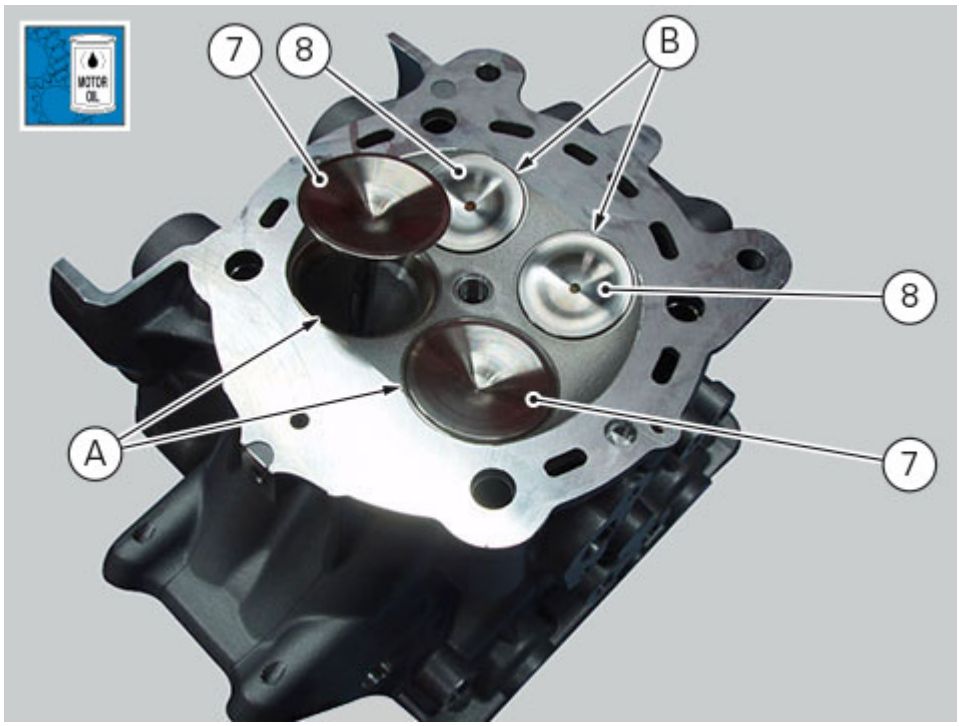

Hold the closing rocker arm (3) pushed downwards and fit the closing shim (6) on the valve stem up to reach the rocker arm. If using the old cylinder head, start by refitting the original shim.

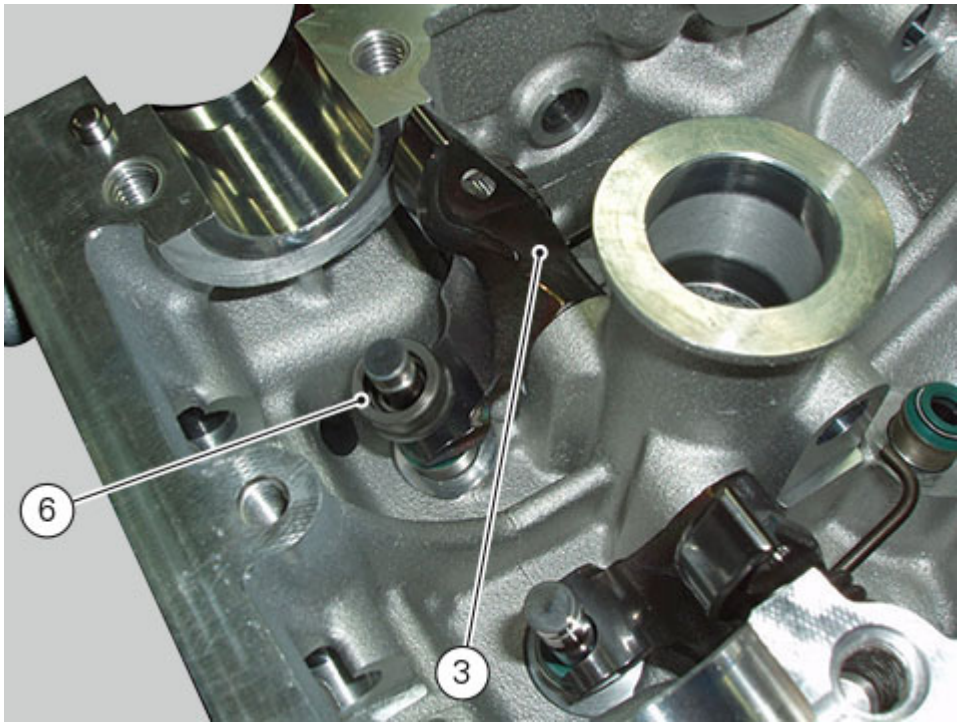

Insert the new split rings (5) in the valve groove (T) and release the rocker arm to correctly position shim (6). Turn the closing rocker arm (3), and compress the spring as much as possible while holding valve, shim and split rings in the valve closed position. Release the rocker arm with a quick movement, so that the split rings seat in the shim.

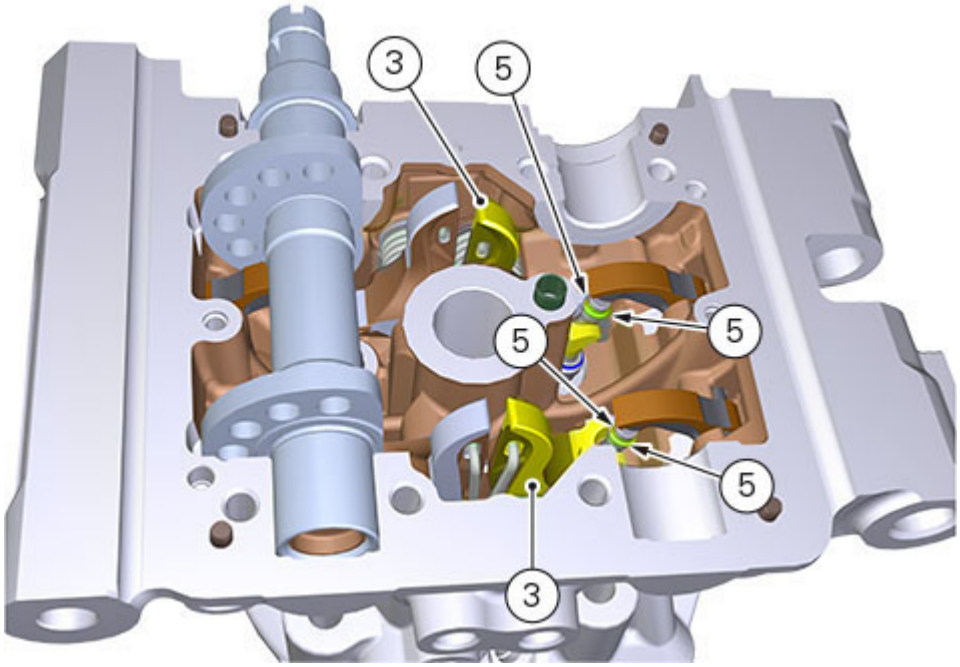
3
5
5
5
5
3

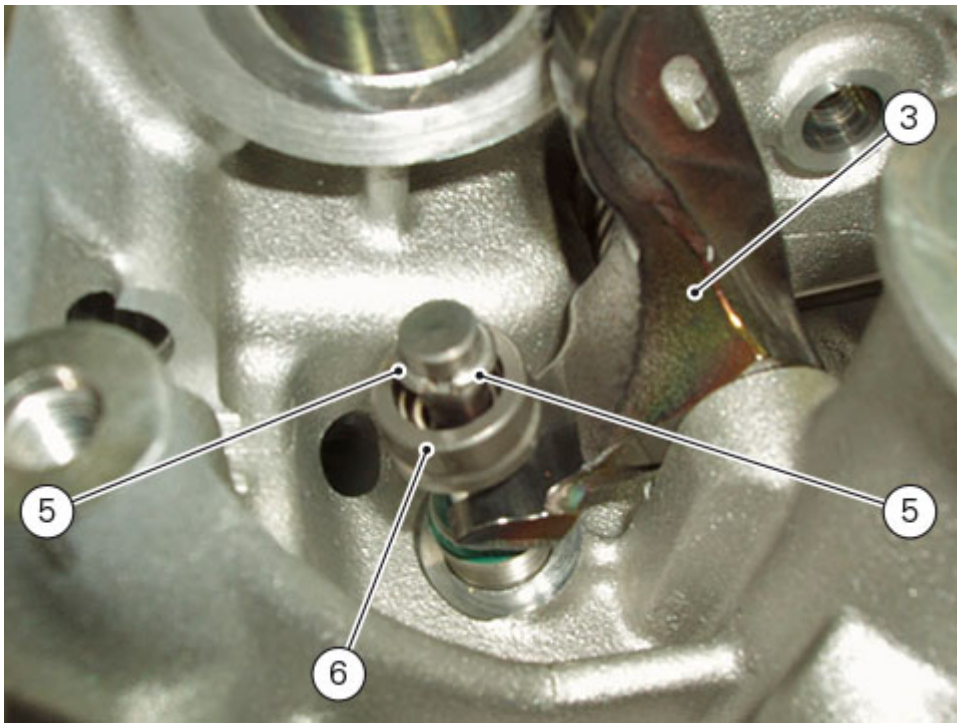
3
5
5
6

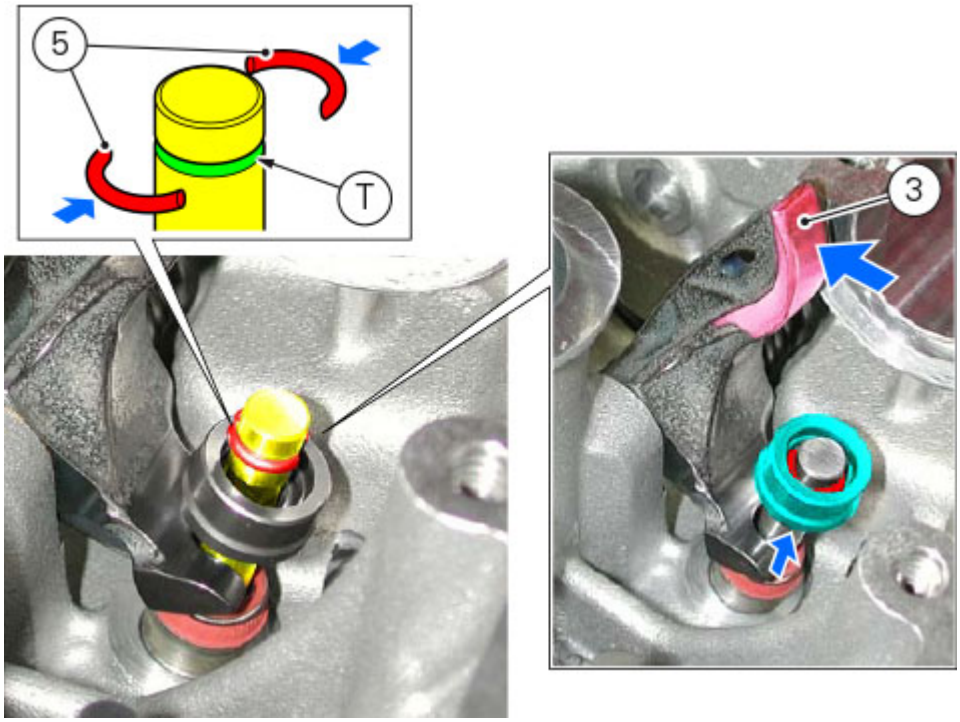

Repeat the procedure with the opposite valve and check that the top of the valve stem is aligned with the surface of the shim (6); if it is not the case, repeat the split ring installation procedure.

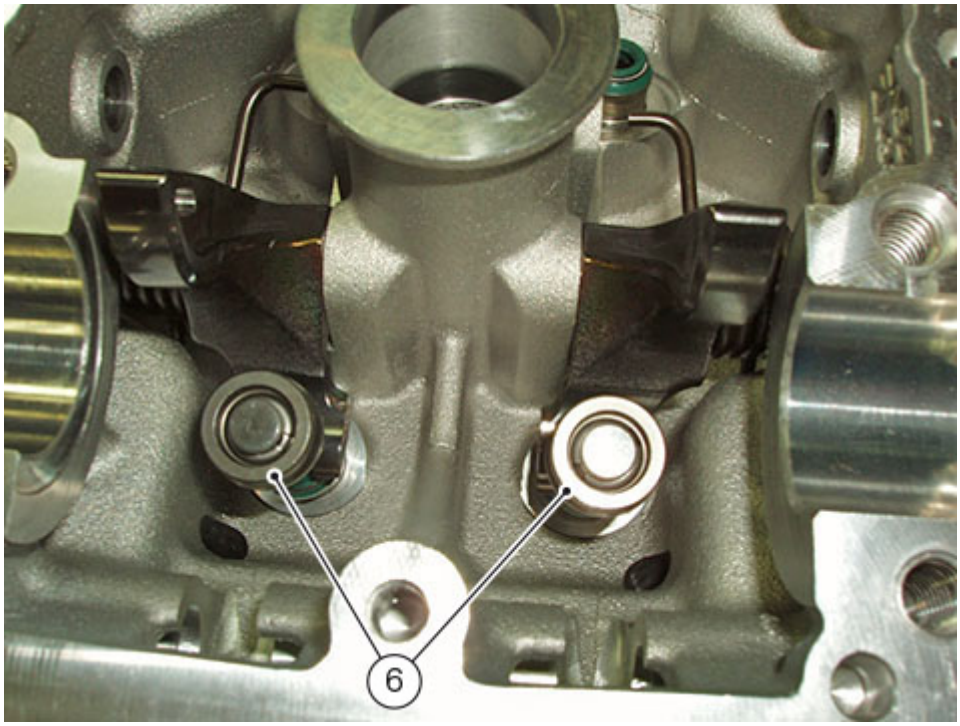

Install the closing shims on the intake valves (7) using the method described above for the exhaust valves. Refit the camshafts (Refitting the camshafts) to check the valve closing clearance (Checking and adjusting the valve clearance).

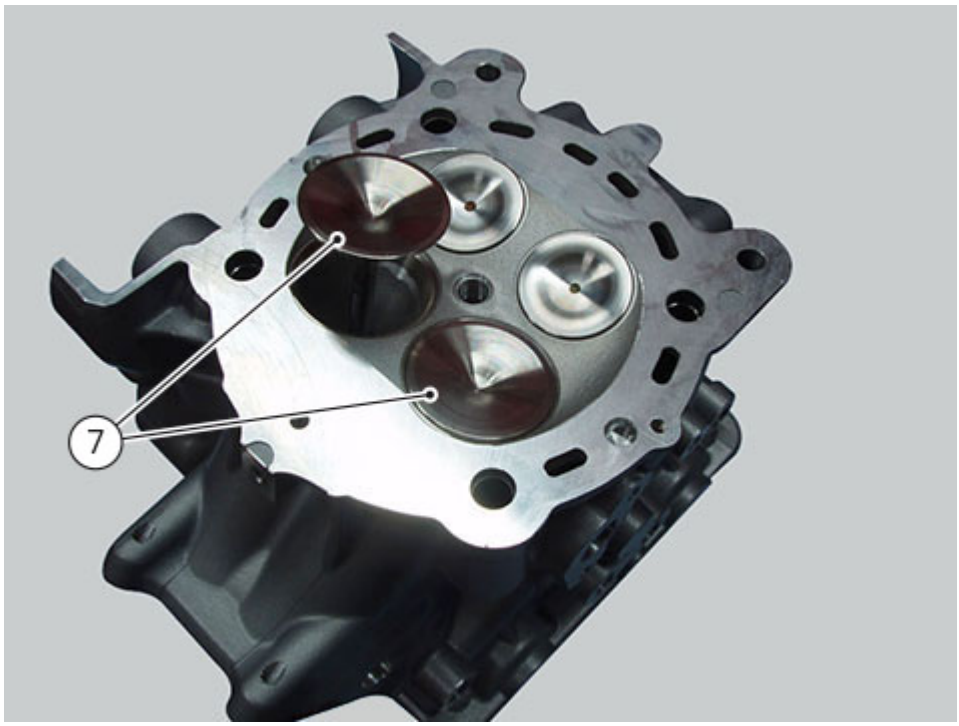
7

Removing the cylinder heads

Remove the engine from the frame (Removing the engine).
Remove the cooling system hoses (Removing cooling system hoses and unions).
Remove the belts and their external covers (Removing the timing belt external covers).

Use tool part no. **88713.2676**, undo the nuts (1) on the cylinder head stud bolts.
Remove the polygonal nuts (1) and special washers (2).

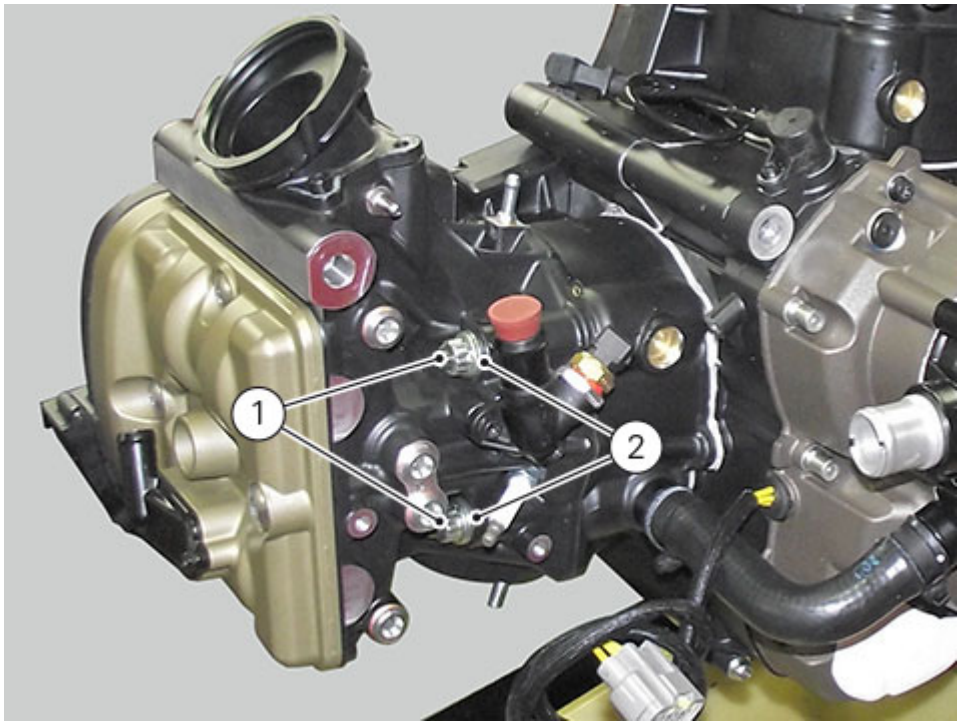

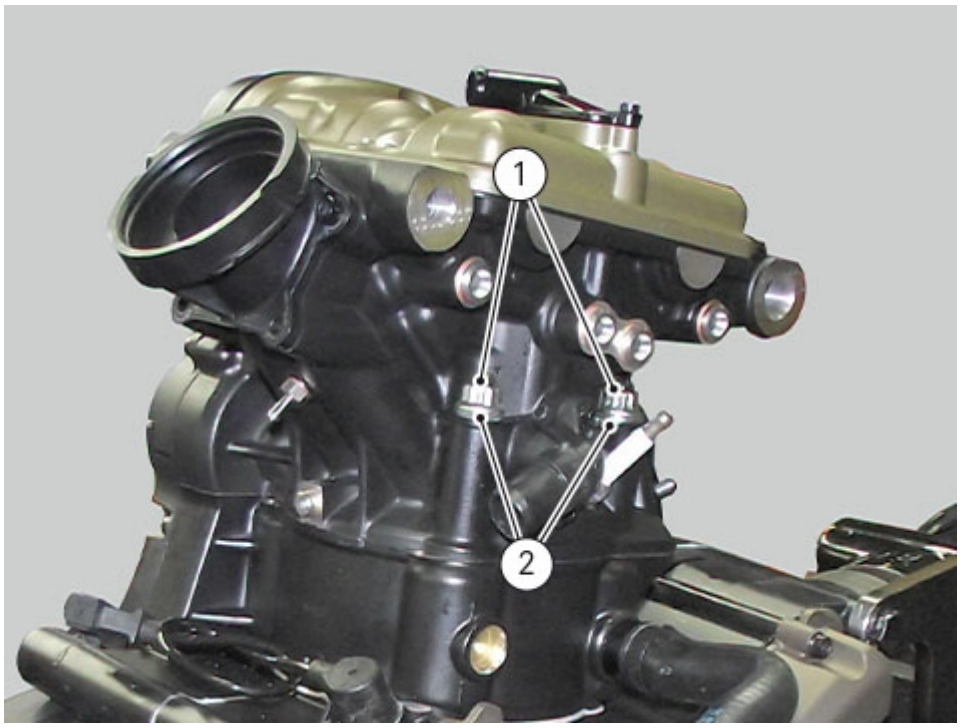

Remove the cylinder head assembly by lifting it off the engine stud bolts.
Repeat the same procedure for the other cylinder head.

Refitting the cylinder/piston assembly

If new parts are used, it is necessary to match cylinders and pistons of the same selection (see chapter "Overhauling the cylinder/piston components").

Note

If the pistons have been separated from their cylinders, before reassembling these components, position the piston ring gaps at 120° from one another (the markings must always face the piston crown).

Use a universal tool to carefully insert the piston into the cylinder (first lubricate the inside of the cylinder with engine oil). Position the cylinder with the smallest valve recess is on the side of the exhaust.

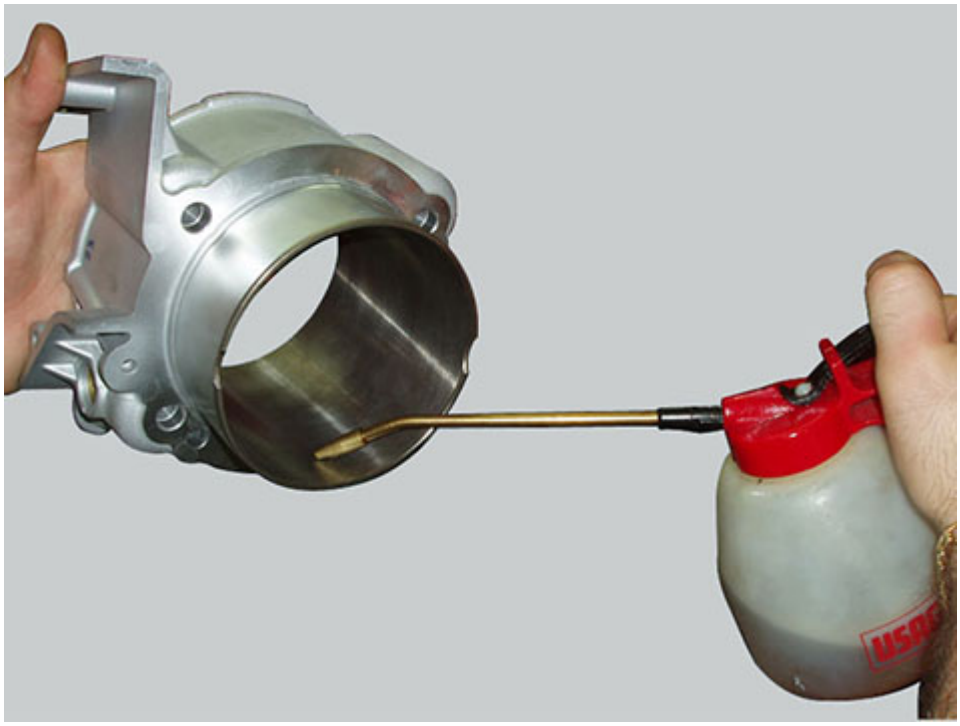



Remove any deposits and degrease the contact surfaces of the crankcase half and the cylinders.
Check that the cylinder centring dowels (B) are fitted on the crankcase.

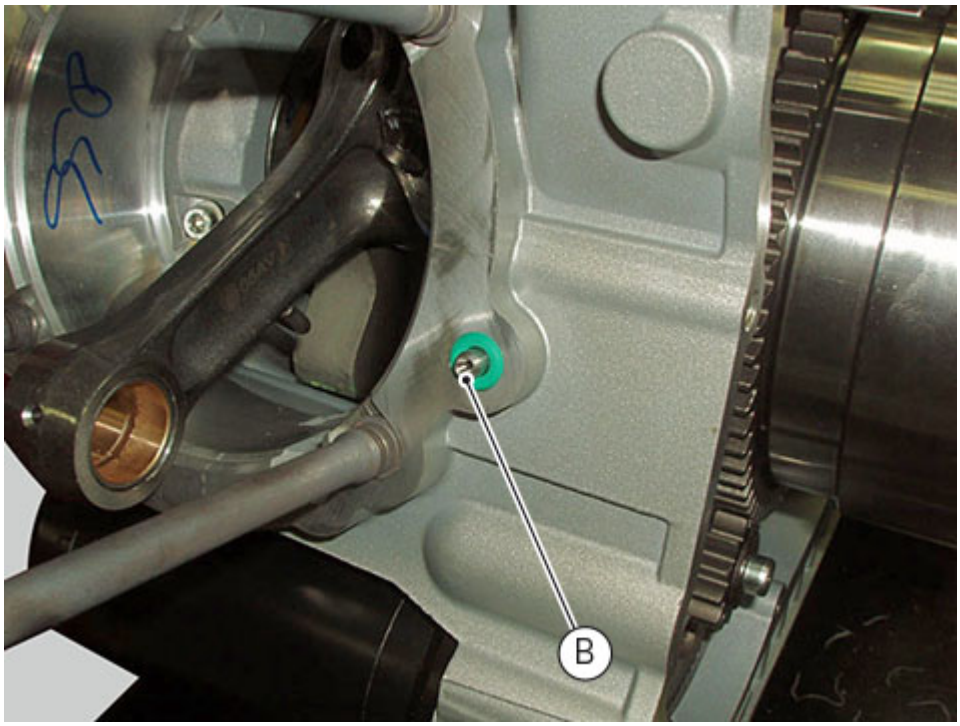

Apply sealant to the gasket (11) then locate the gasket on the crankcase.

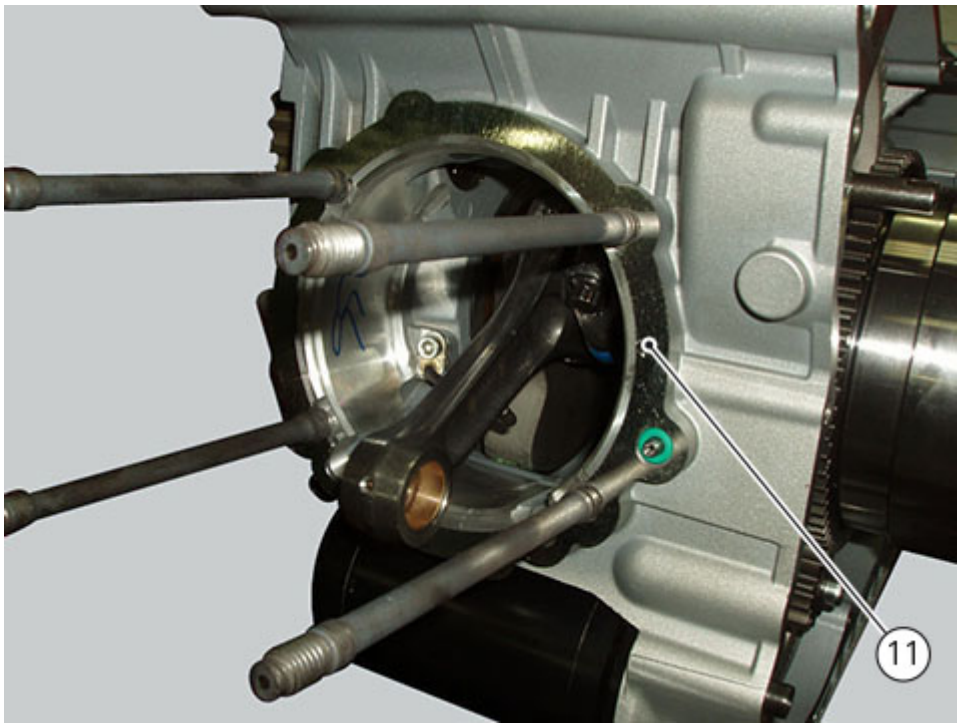

Using the cap (C) no. **88713.1920**, fit the O-rings (A) on each stud bolt and guide them into their seats in the crankcase.

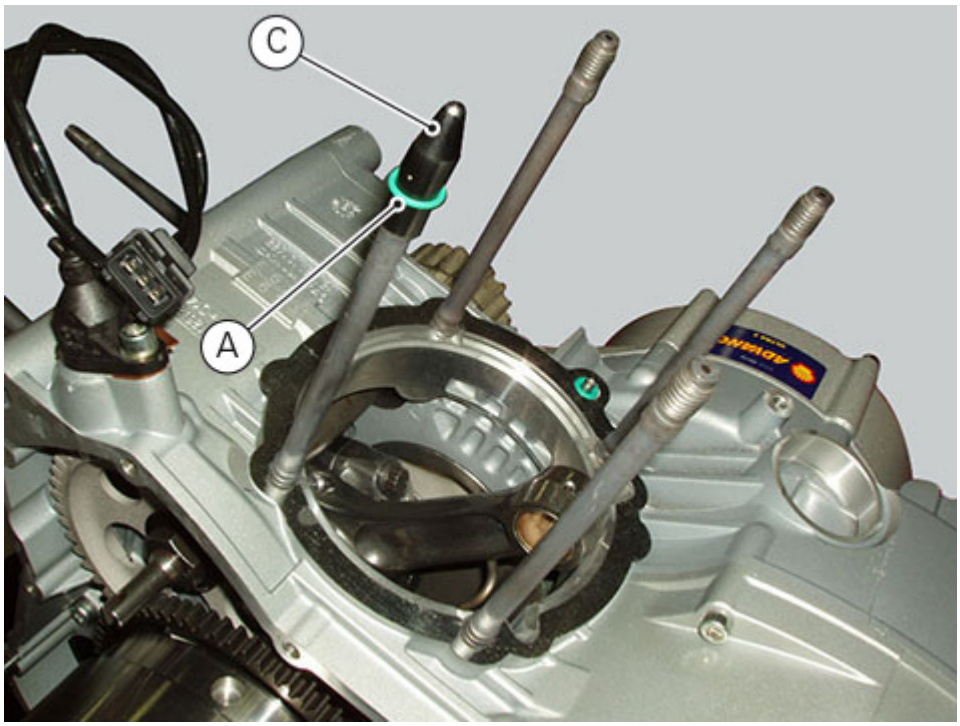

Bring the connecting rod small end close to TDC and slide the cylinder-piston assembly (12-4) onto the crankcase stud bolts.
Push the connecting rod small end into the piston close to the gudgeon pin (10) hole. Lubricate and insert the gudgeon pin.

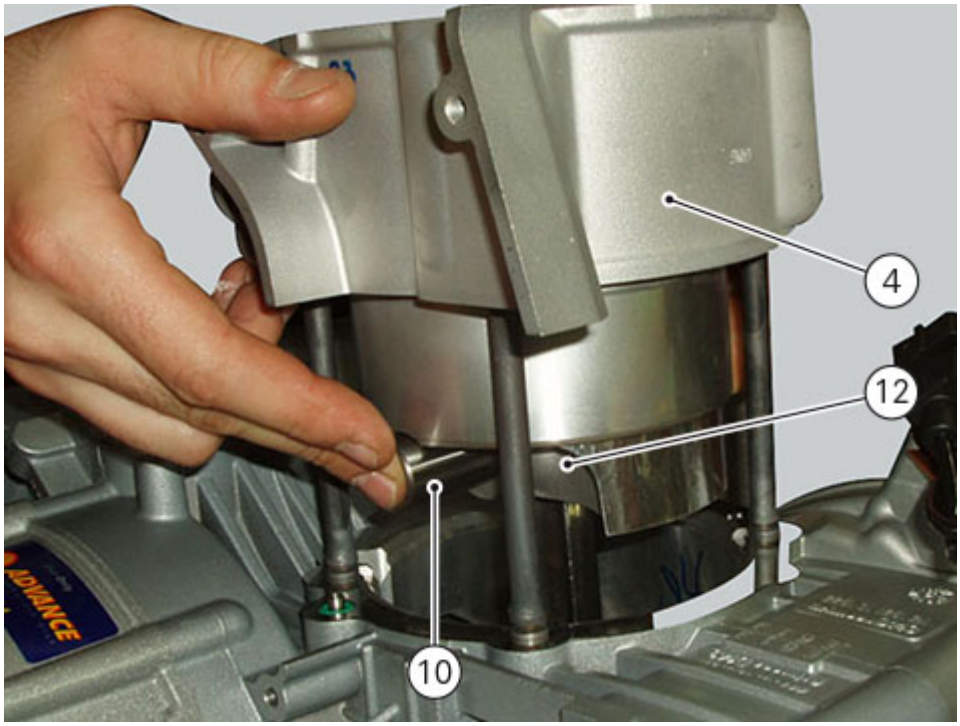

The gudgeon pin (9) must slide smoothly in the connecting rod small end bush and in the piston (12).
Close the crankcase opening with a cloth to prevent foreign objects from falling inside and then fit the snap ring (10) as shown in the figure.

Important
Always fit new circlips upon reassembly.

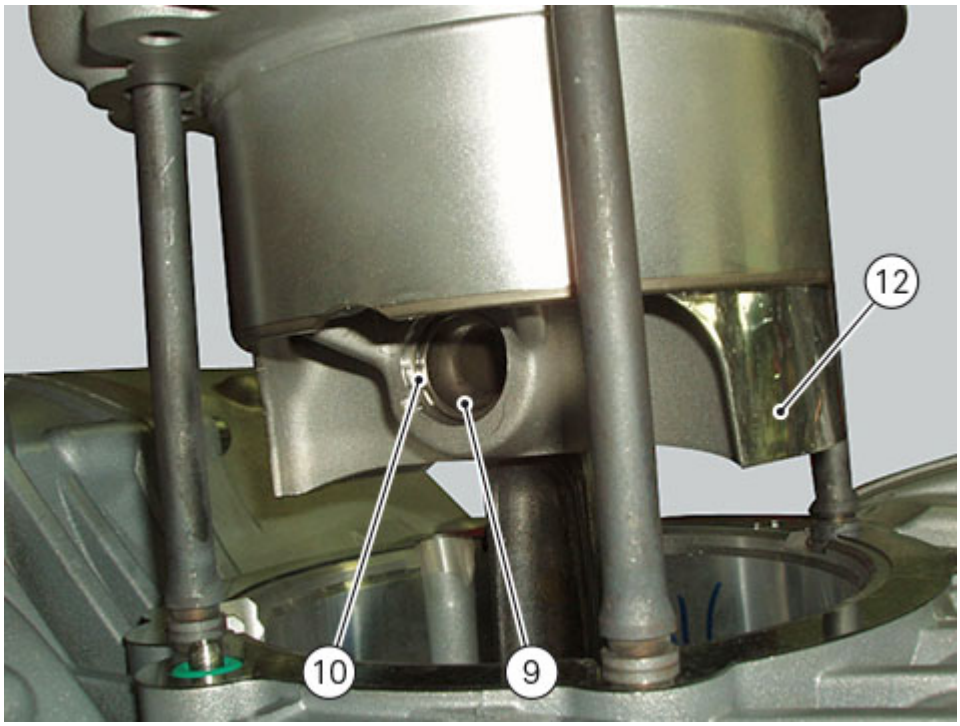

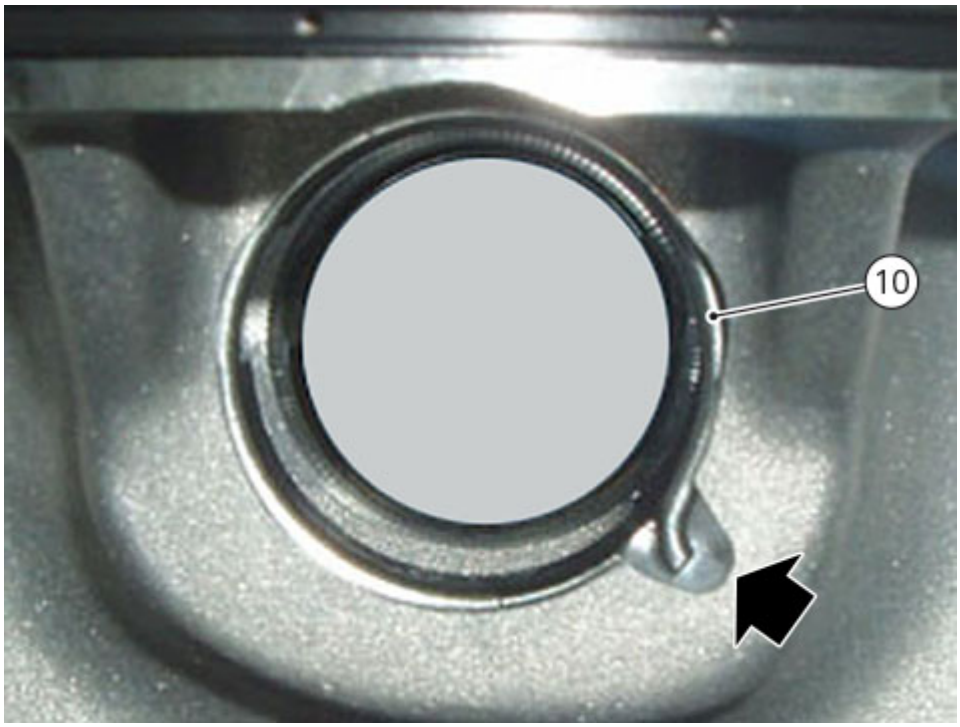

Push the cylinder (8) down until it seats against the crankcase.

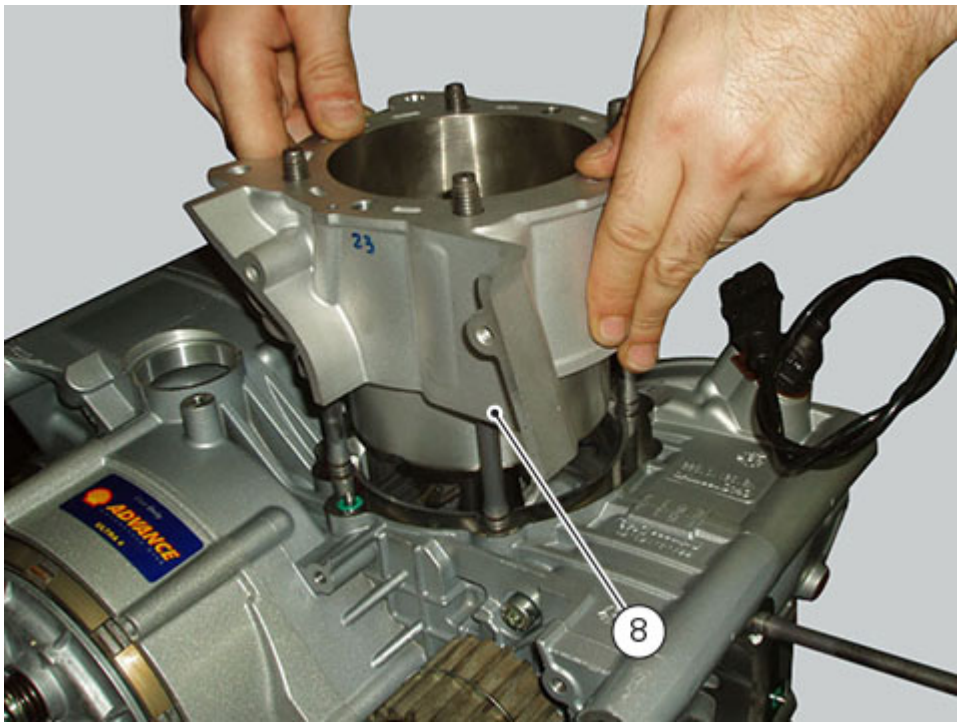

Refit the bushes (7).

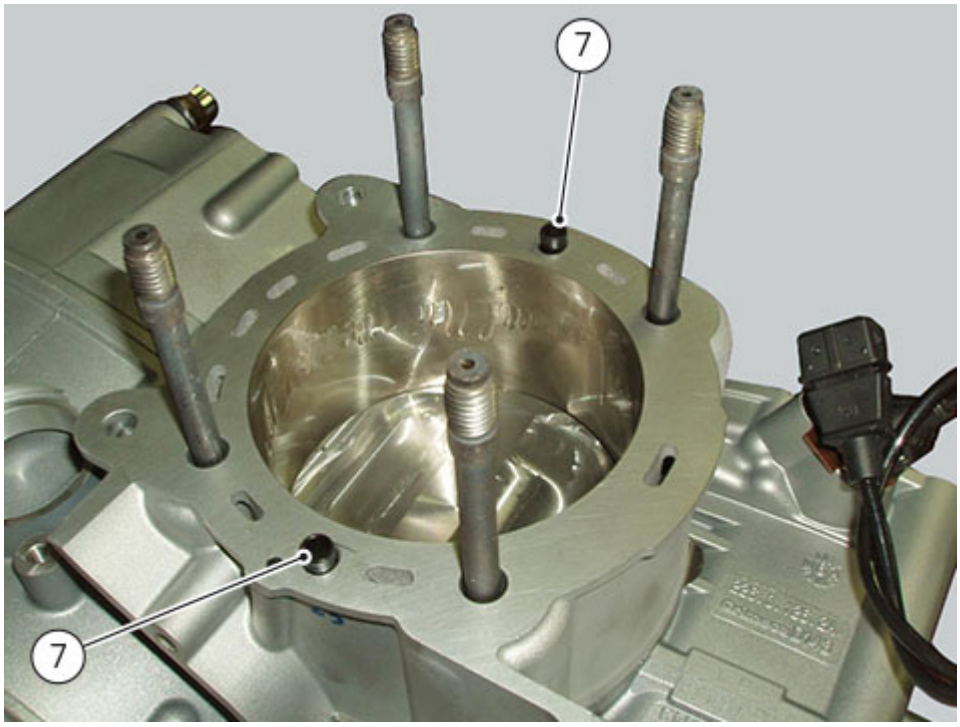

Fit the cylinder head gasket (6) over the stud bolts. The side marked with the part number must be facing the cylinder head.

Note

The shape of the gasket prevents incorrect fitting, provided that the fluid flow holes are aligned with those on the cylinder.

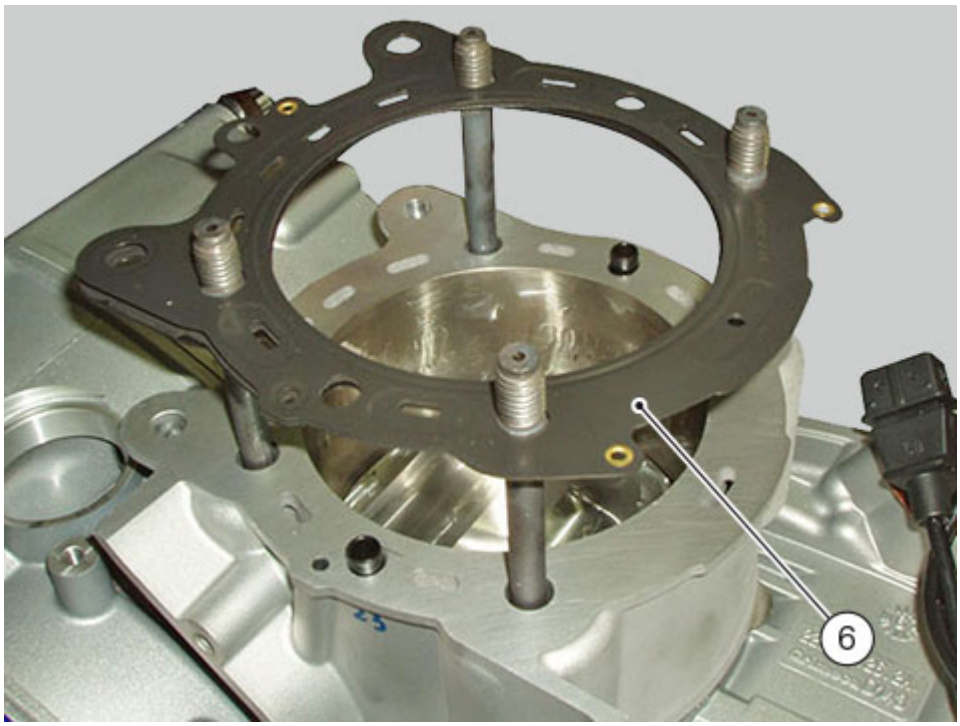

Repeat the procedures for the other cylinder and refit the cylinder heads (Refitting the cylinder head assemblies).
In case they have been removed, apply prescribed threadlocker to unions (5) and tighten them to a torque of 25 Nm (Min. 23 Nm - Max. 27 Nm).

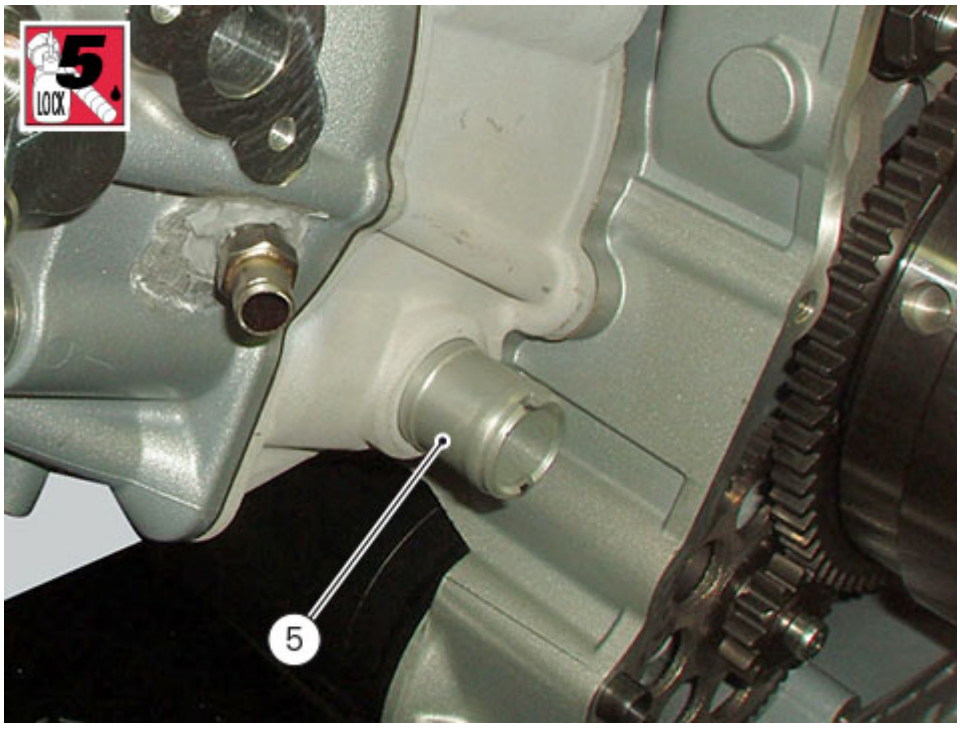

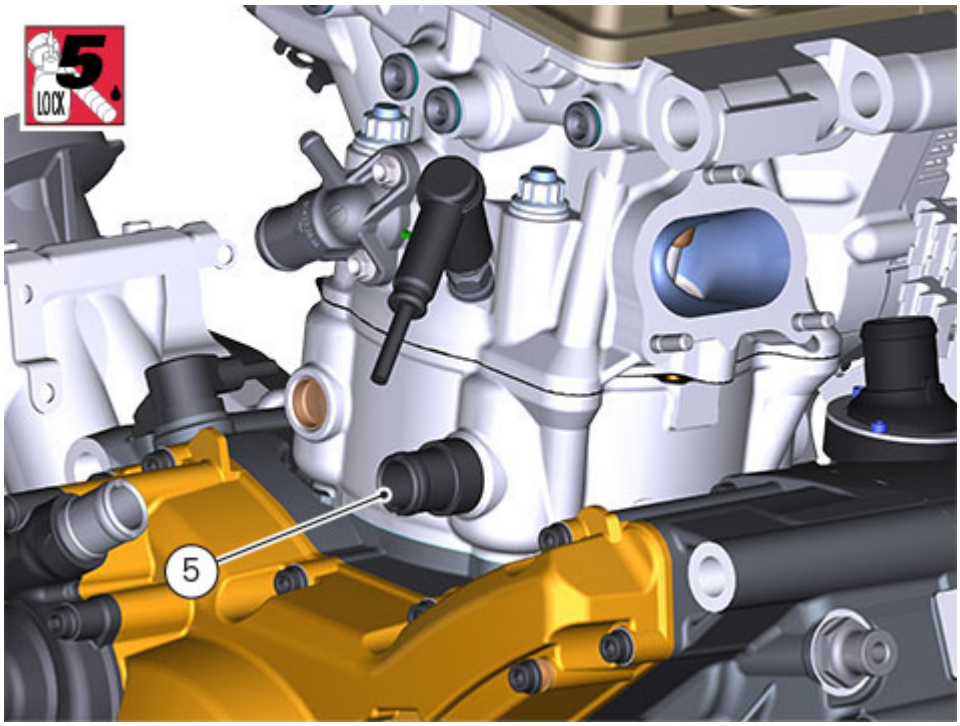

Fit hoses (2) and (3), and tighten the clips (1) to a torque of 2.5 Nm (Min. 2 Nm - Max. 3 Nm).

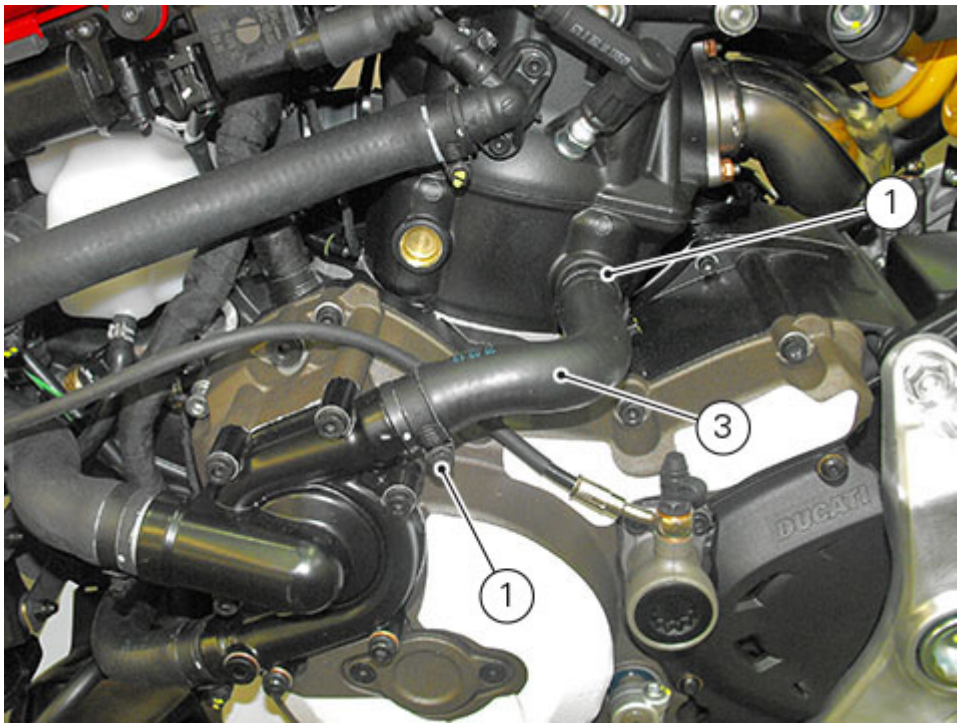

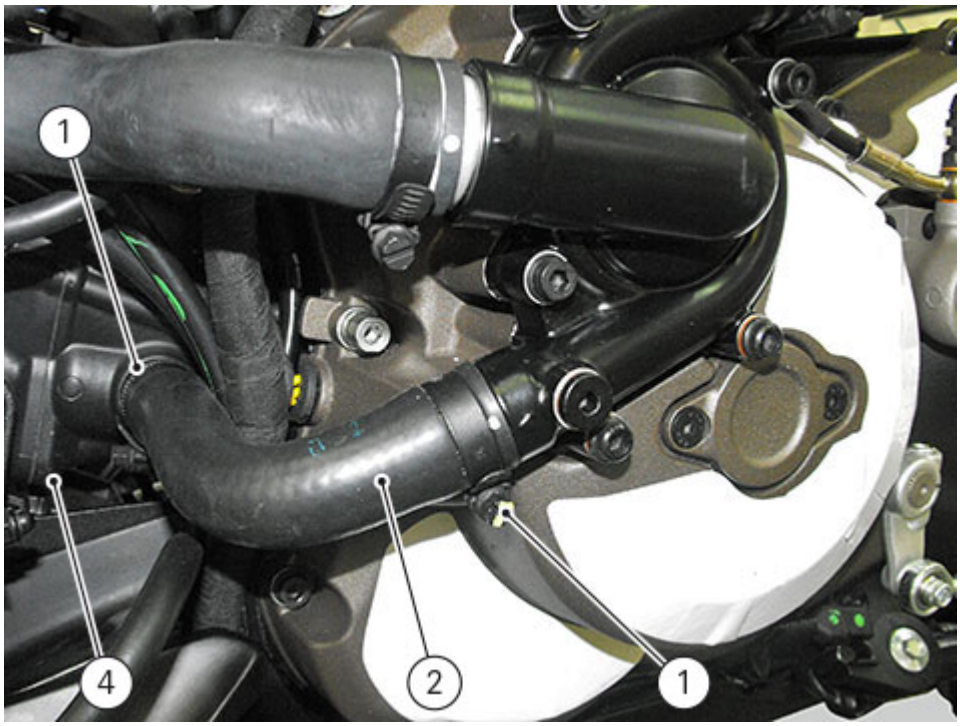

Refit the belts and their external covers (Refitting the timing belt external covers).
Refit the cooling system hoses (Refitting cooling system hoses and unions).
Refit the engine in the frame (Refitting the engine).

Overhauling the cylinder/piston components

Overhauling the cylinder

Check that the walls of the cylinder are perfectly smooth. Measure the cylinder diameter at 50 mm from the top face and determine the size class to which it belongs in accordance with the values specified in Sect. Cylinder/piston. Repeat measurement of the diameter at three heights A (10 mm from the upper surface), B (50 mm from the upper surface) and C (100 mm from the upper surface) and in two directions at 90° between them; check that the measurements of taper and ovality fall within the range specified in Sect. Cylinder/piston. In the event of damage or excessive wear the cylinder must be replaced as it has a silicon carbide coating (which provides the cylinder walls with excellent anti-friction and anti-wear properties) and therefore cannot be ground. The cylinders are marked with letters (stamped between the two oil return ways) indicating their size class. Always match cylinders with pistons from the same size class.

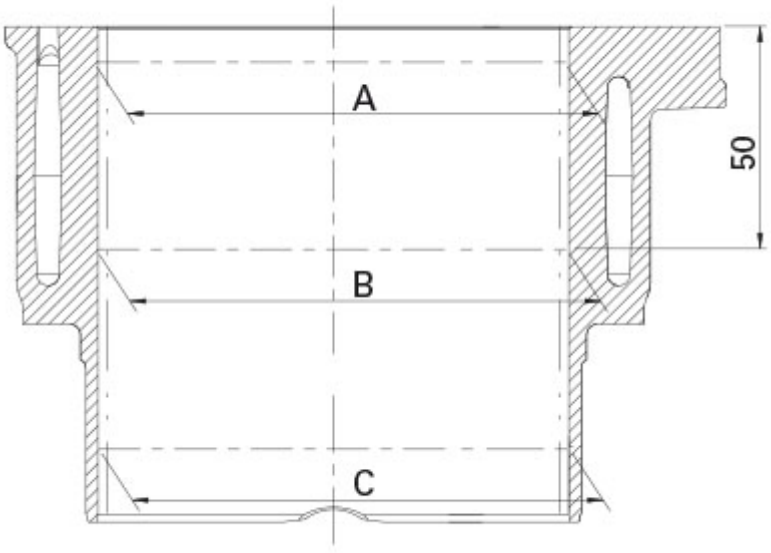

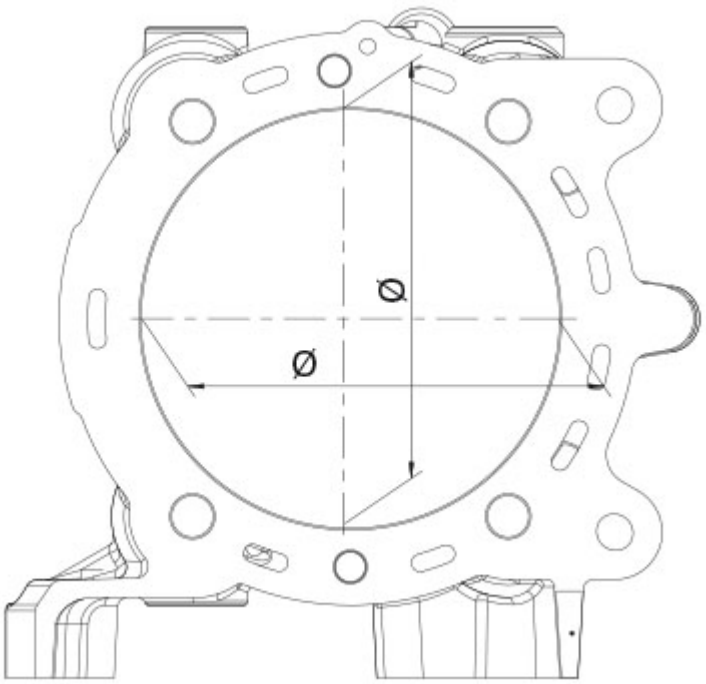

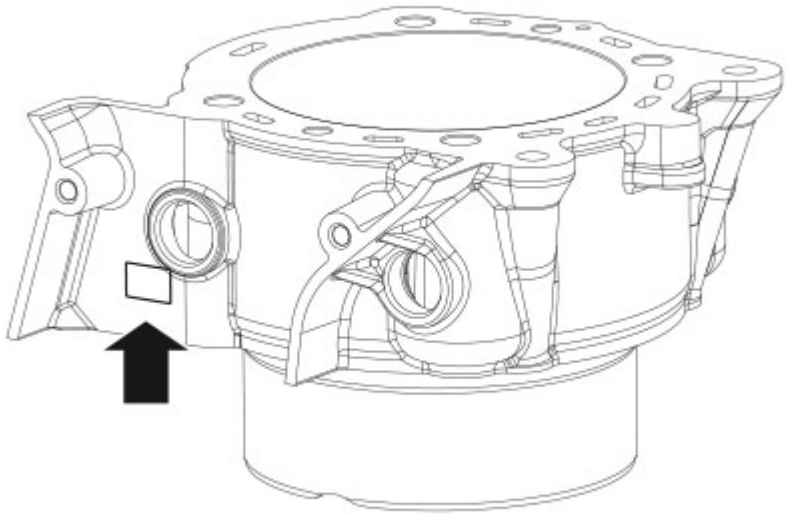

Overhauling the piston

Clean the piston crown and piston ring grooves, removing any carbon deposits.
Visually inspect the piston and check its dimensions carefully: there must be no signs of scuffing, scoring, cracks, or other damage.
The piston diameter must be measured at 7.5 mm up from the bottom of the skirt and in perpendicular direction to the gudgeon pin axis.
The pistons must always be replaced as a pair.



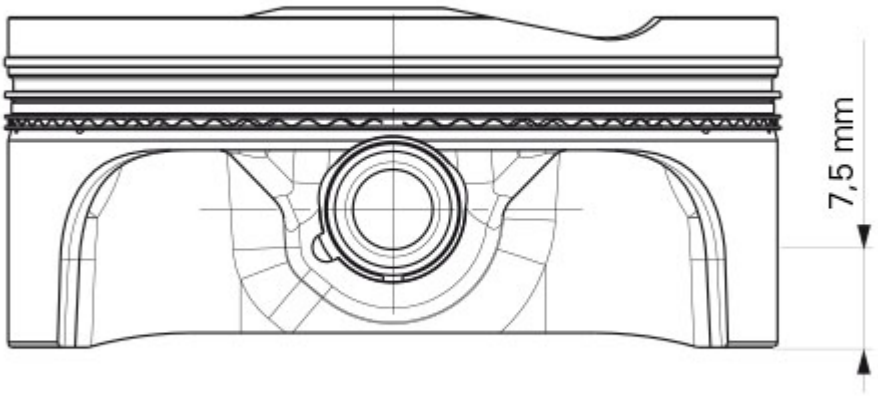

Checking the piston-cylinder clearance

The pistons are marked with a letter (punched into the piston crown) that indicates the size class to which they belong.
Always match piston with cylinder from the same size class.
For the correct values refer to chapter "Cylinder/piston".



Overhauling the gudgeon pins

Gudgeon pins must be perfectly smooth without signs of scoring, steps, or blueing due to overheating. The well-lubricated gudgeon pin must slide smoothly inside the piston without stiffness.
For the coupling clearance values with the piston and the connecting rod, see chapter "Cylinder/Piston".
If a new gudgeon pin is fitted, you must also change the connecting rod small end bush.

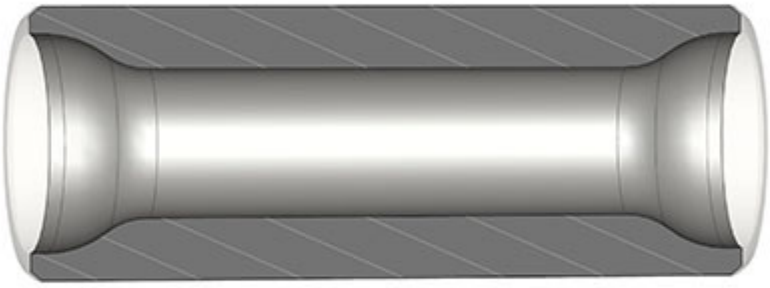

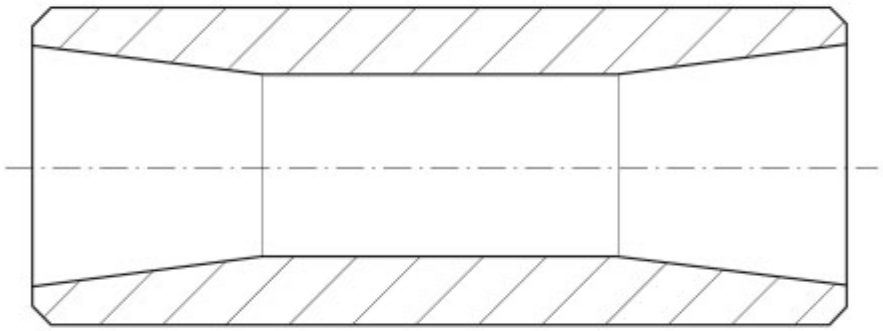

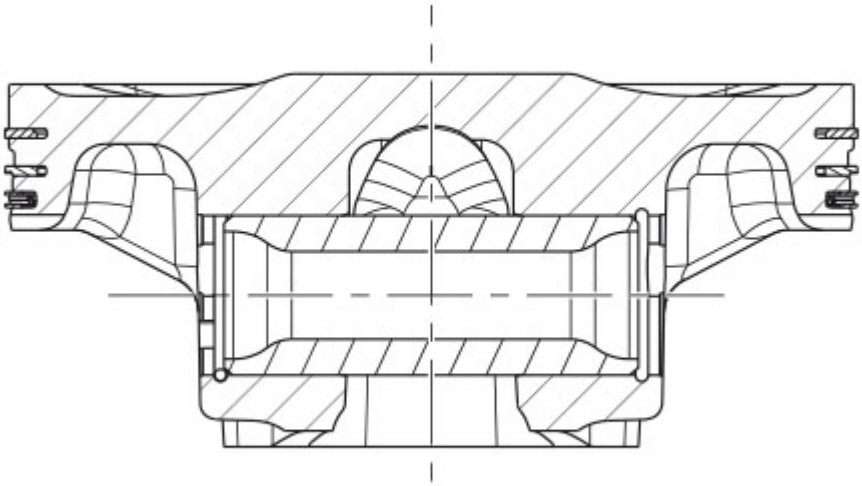

Overhauling the piston rings

The piston rings must not show any signs of scuffing or scoring. Spare pistons are supplied complete with piston rings and gudgeon pin.

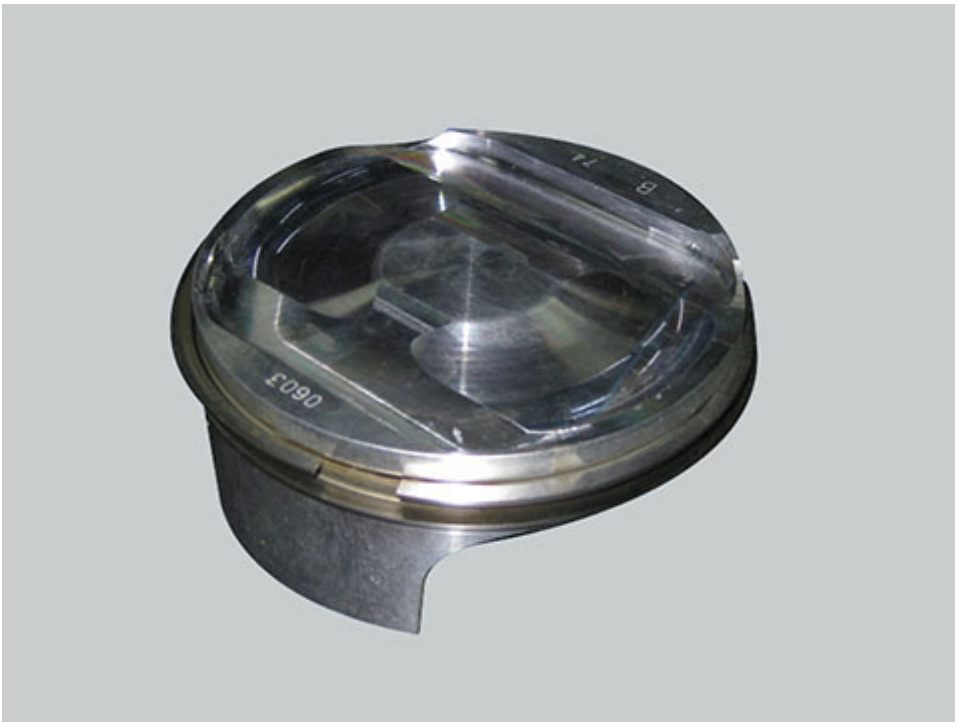

Checking the piston ring-grooves clearance

The maximum permissible wear limit is 0.15 mm for the top ring (1st ring "S") and 0.10 mm for the others (2nd ring "T" and oil scraper ring "R").
The piston rings must always be fitted with markings (M) facing upwards.

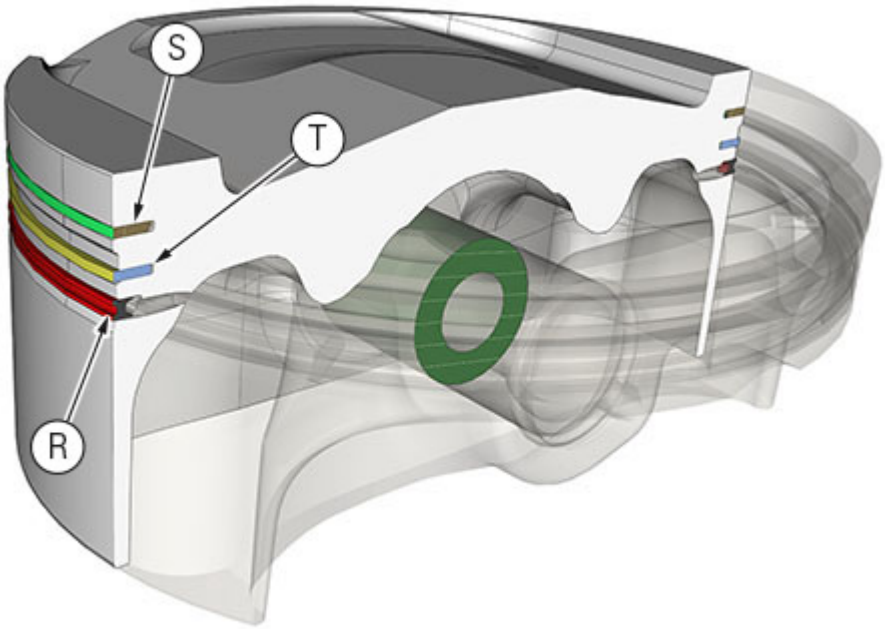
S
T
R

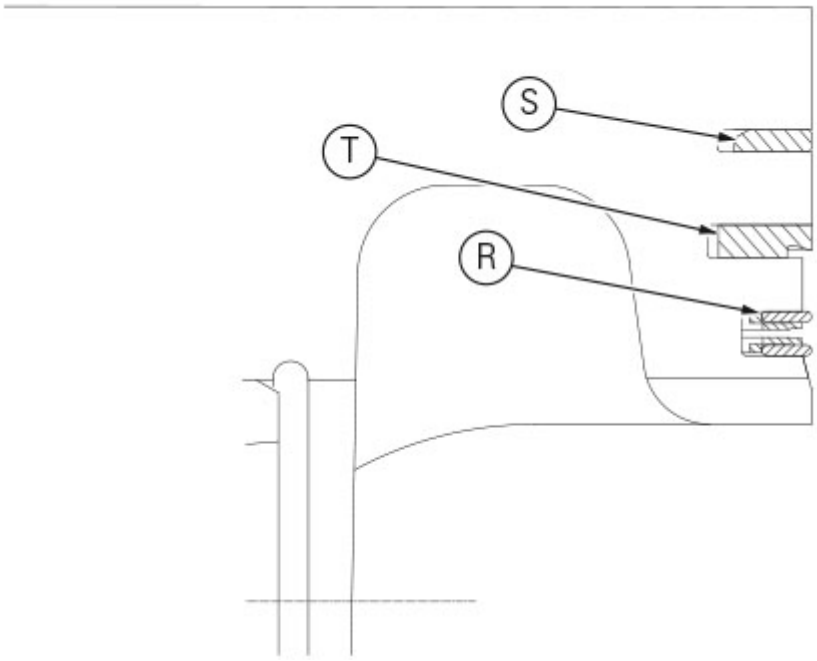
S
T
R

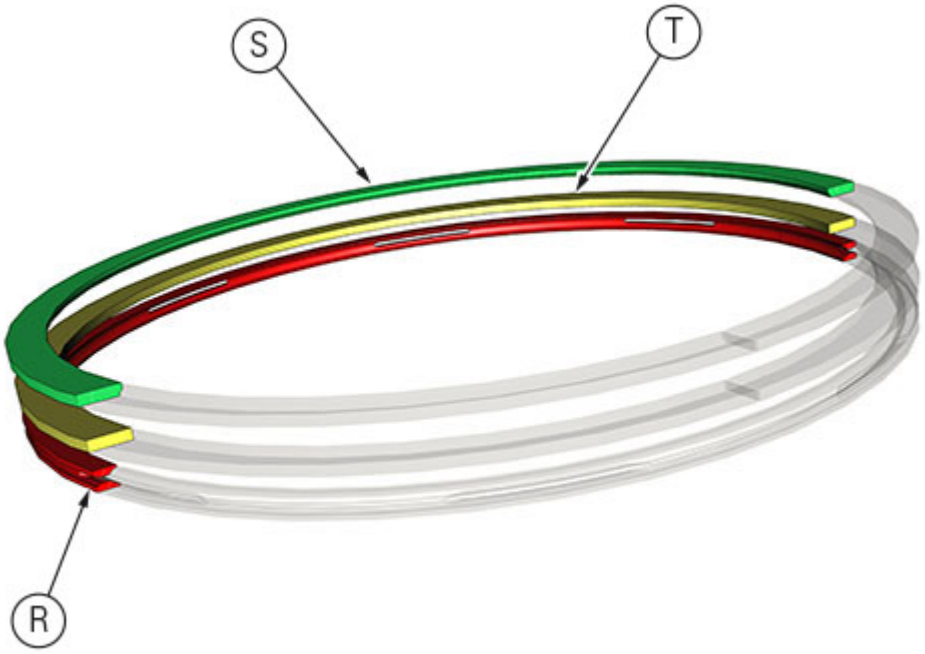

First ring (S).

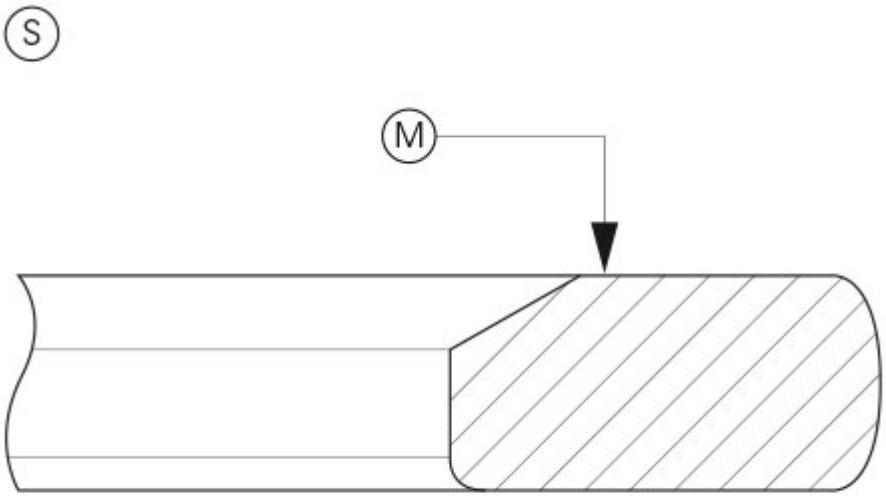

Second ring (T).

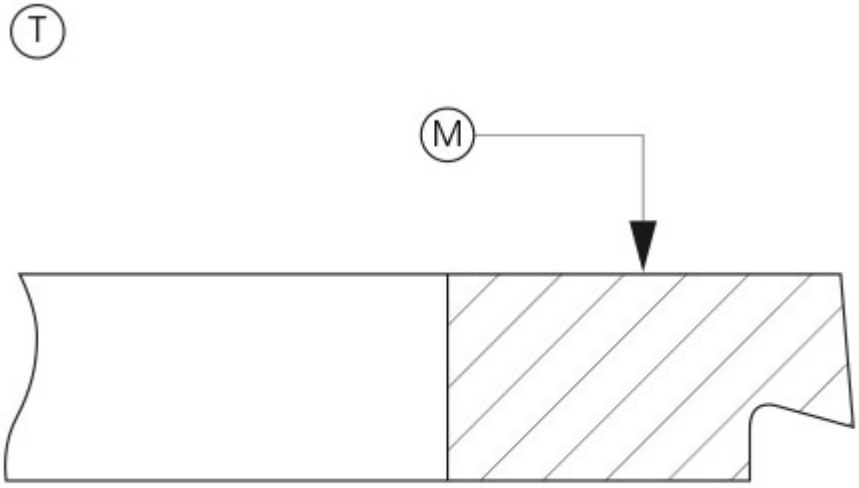

Oil scraper ring (R).

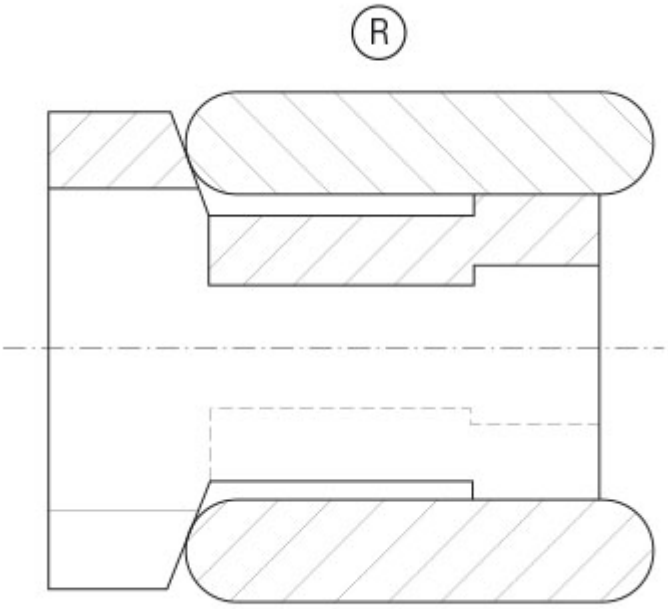

Checking the piston ring/cylinder clearance

Insert the piston ring 50 mm from the top face of the cylinder; make sure that the ring is positioned perfectly square to the cylinder axis by checking with a gauge at several points around the ring that the top surface of the ring is 50 mm from the cylinder top face.
Measure the piston ring gap (A):

	Distance (A) mm	Wear limit
Upper piston ring	0.2 to 0.4	0.8
Intermediate piston ring	0.3 to 0.5	0.8
Oil scraper ring	0.2 to 0.7	1.0

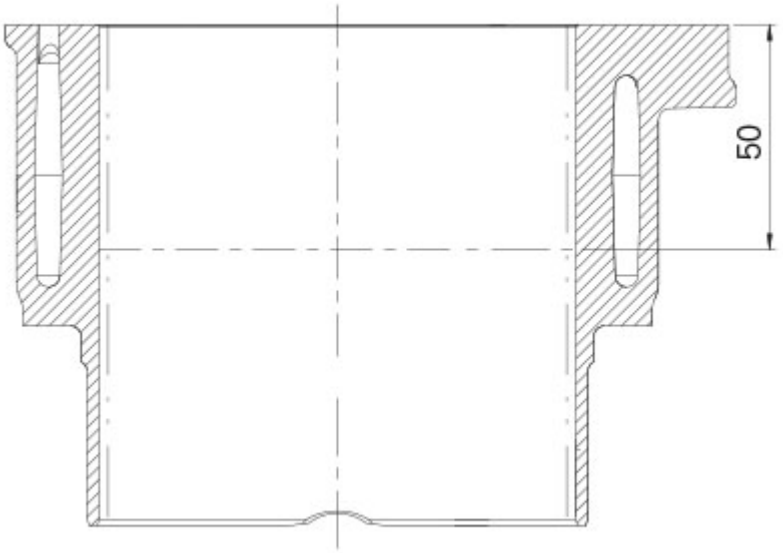
50

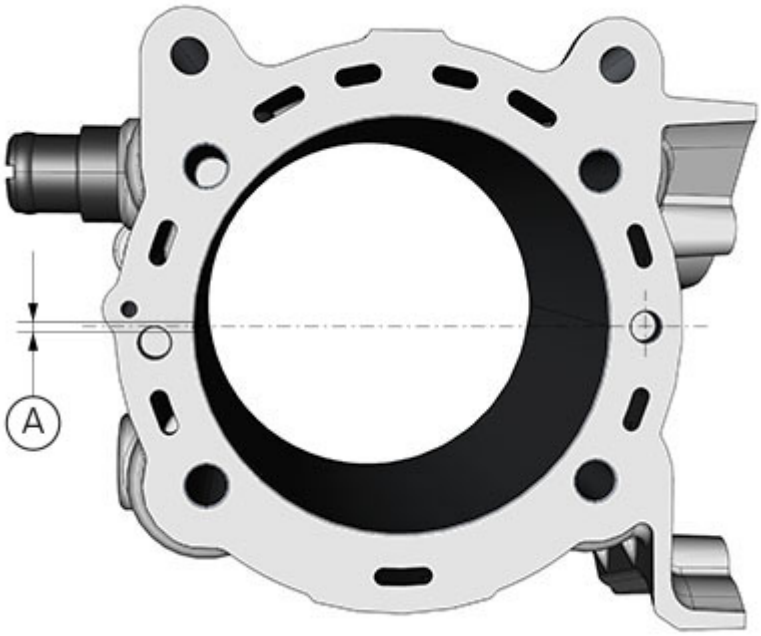
A

Removing the cylinder/piston assembly

Remove the engine from the frame (Removing the engine).
Remove the cooling system hoses (Removing cooling system hoses and unions).
Remove the belts and their external covers (Removing the timing belt external covers).
Remove the heads from the engine block (Removing the engine heads).

Loosen the clips (1) and remove the hoses (2) and (3) from the cylinders (4) and from the generator cover.

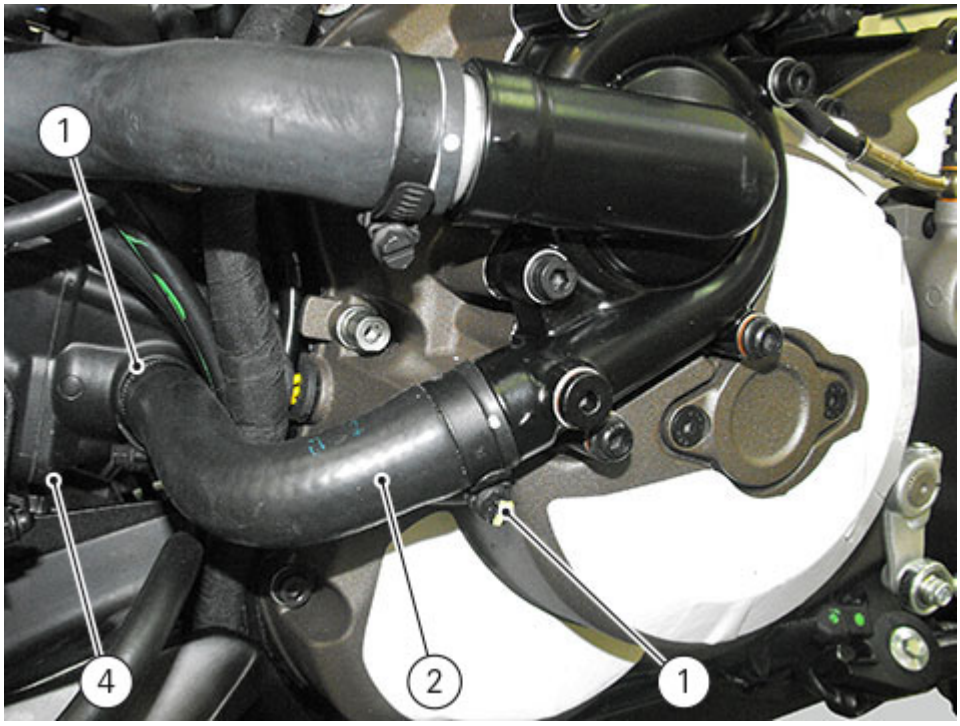

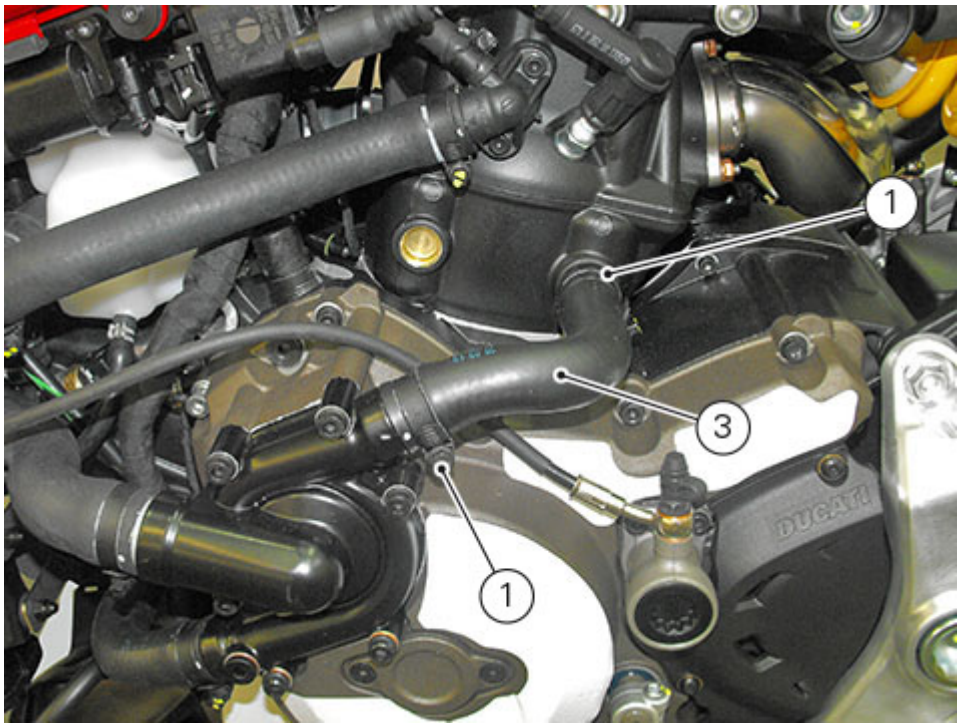

If damaged, unscrew the unions (5).

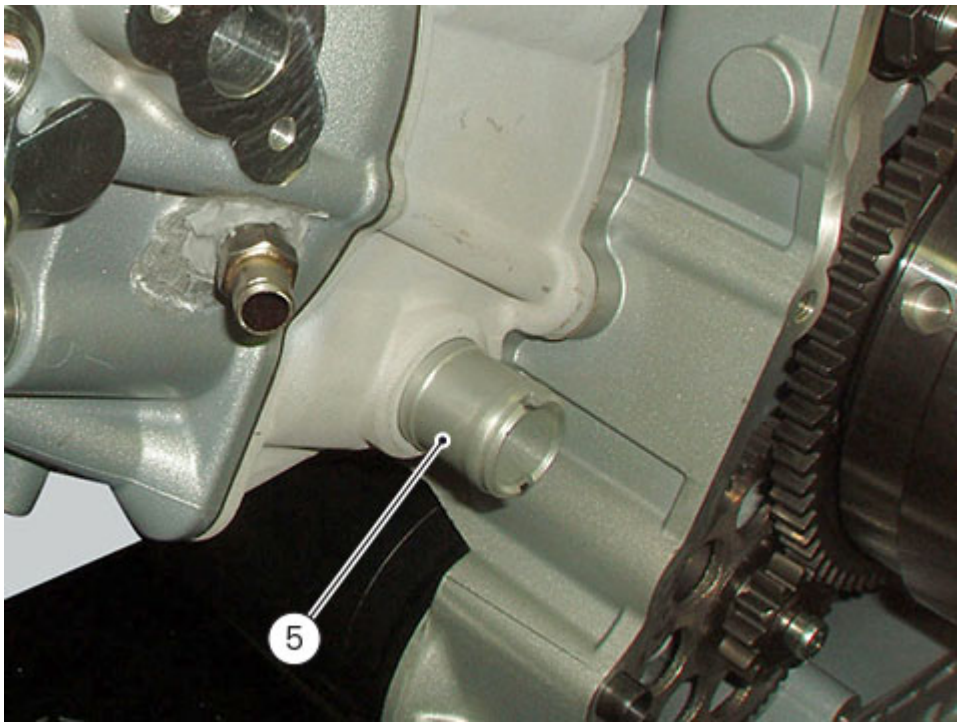

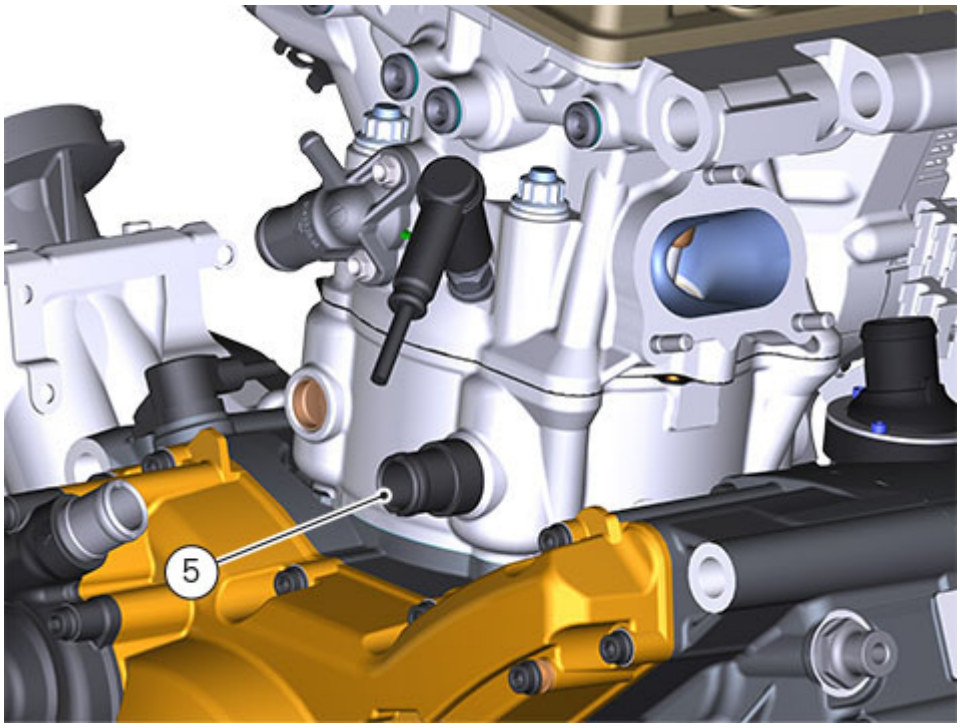

Note

The following procedure is described with the engine removed from the frame and the cylinder head removed from the engine.

Remove the cylinder head gasket (6) from the piston-cylinder assy.

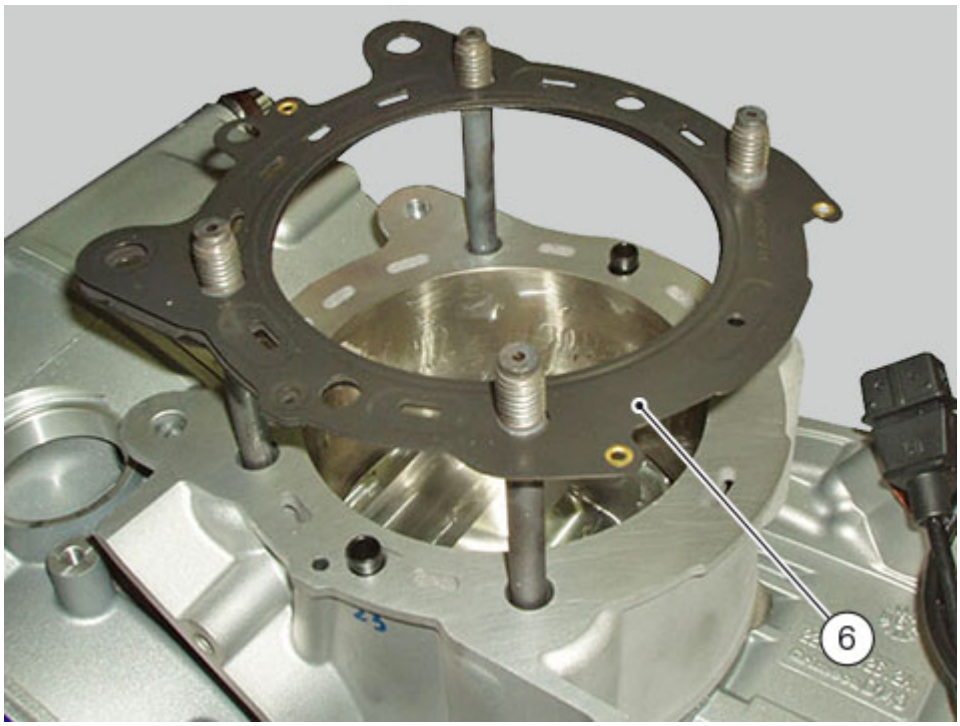

Remove the bushes (7).

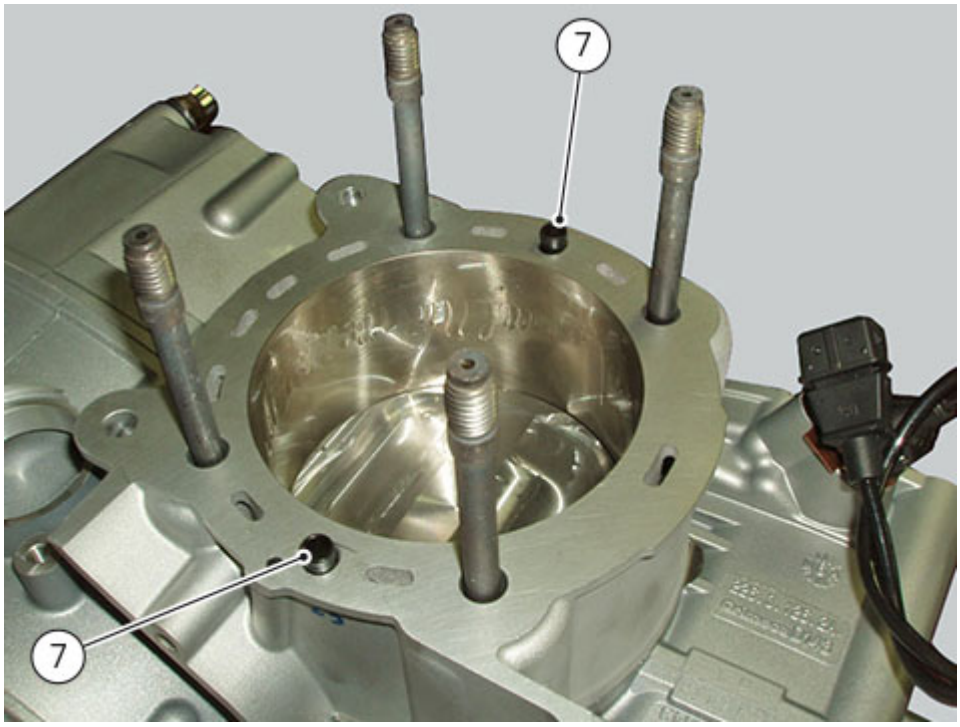

Use tool (B) part no. **88765.1657** to bring the piston of the horizontal cylinder near the TDC.

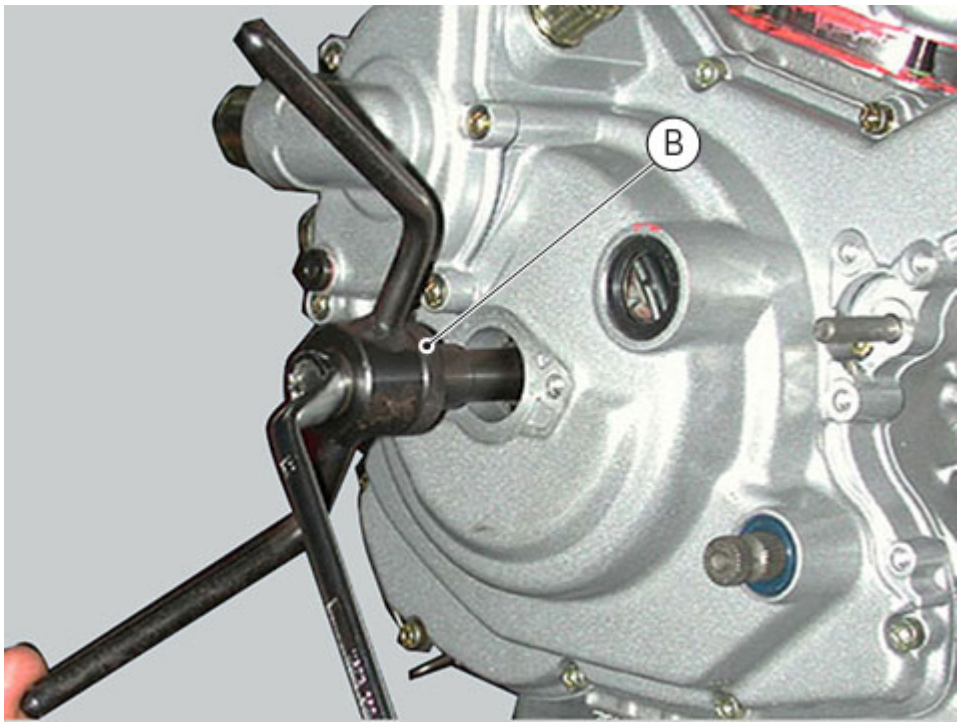

Carefully lift the cylinder (8) off the crankcase, keeping it vertical. If necessary, rock the cylinder slightly using both hands or tap its base gently with a rubber mallet. Continue to lift the cylinder until you can access the gudgeon pin (9).

Since insertion of piston in the cylinder is a difficult operation to perform at the time of reassembly, remove the piston together with the barrel as described below.
Stuff the crankcase opening with a rag or soft paper to prevent foreign material from falling inside.

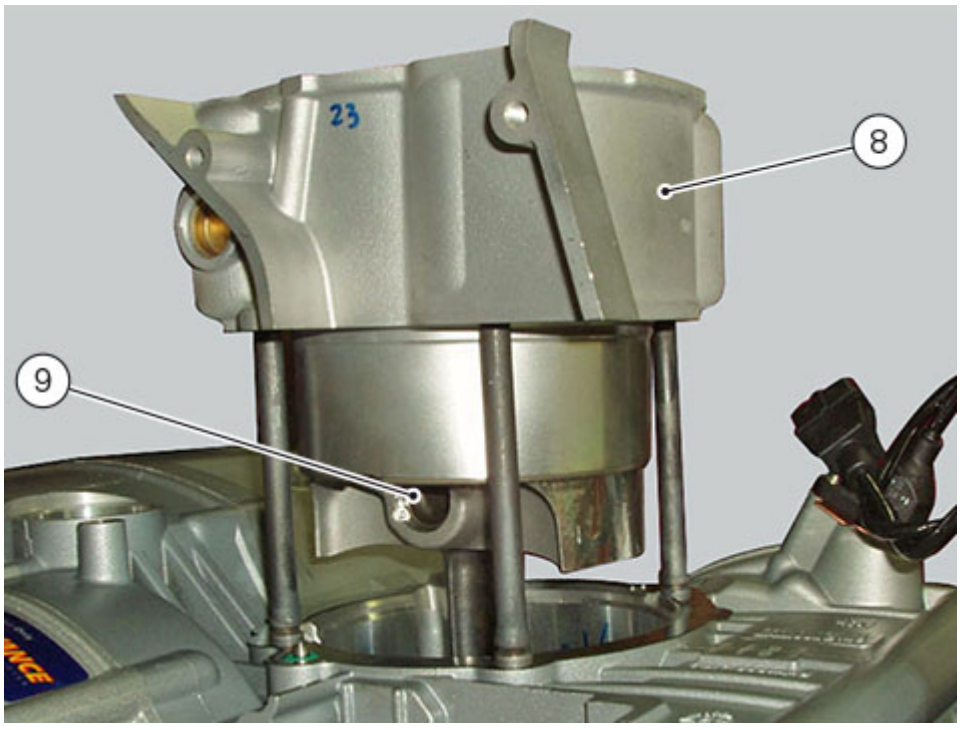

Remove the snap ring (10) from the gudgeon pin (9) on the clutch side.

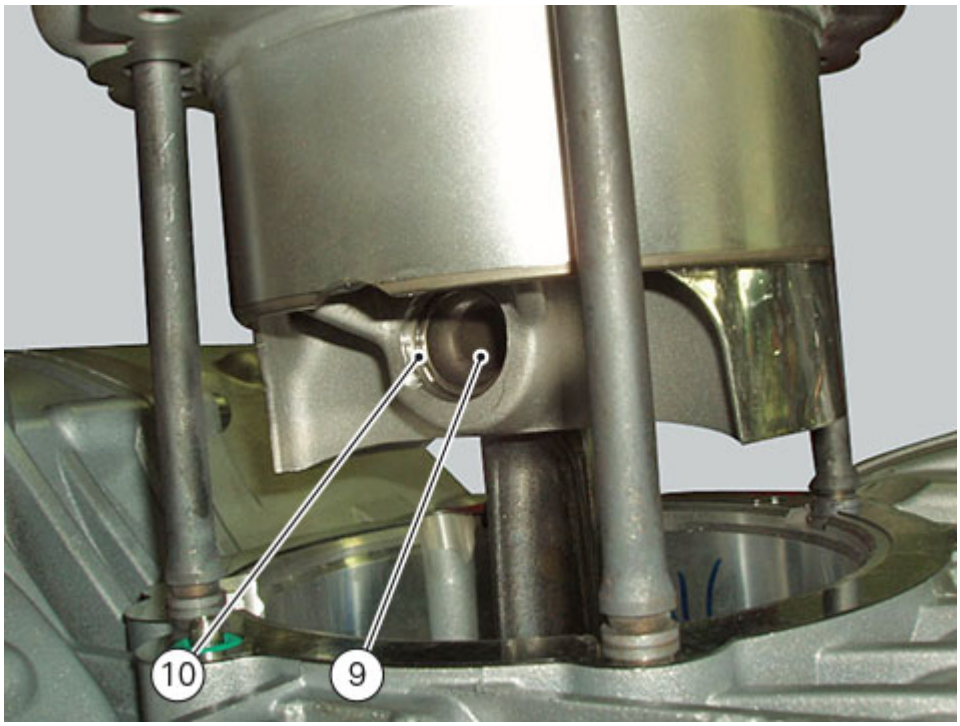

Working from the opposite side, drive out the gudgeon pin sufficiently to release the connecting rod.
Lift the cylinder-piston assembly clear of the crankcase stud bolts. If work is to be carried out on the piston, carefully withdraw it from the cylinder.

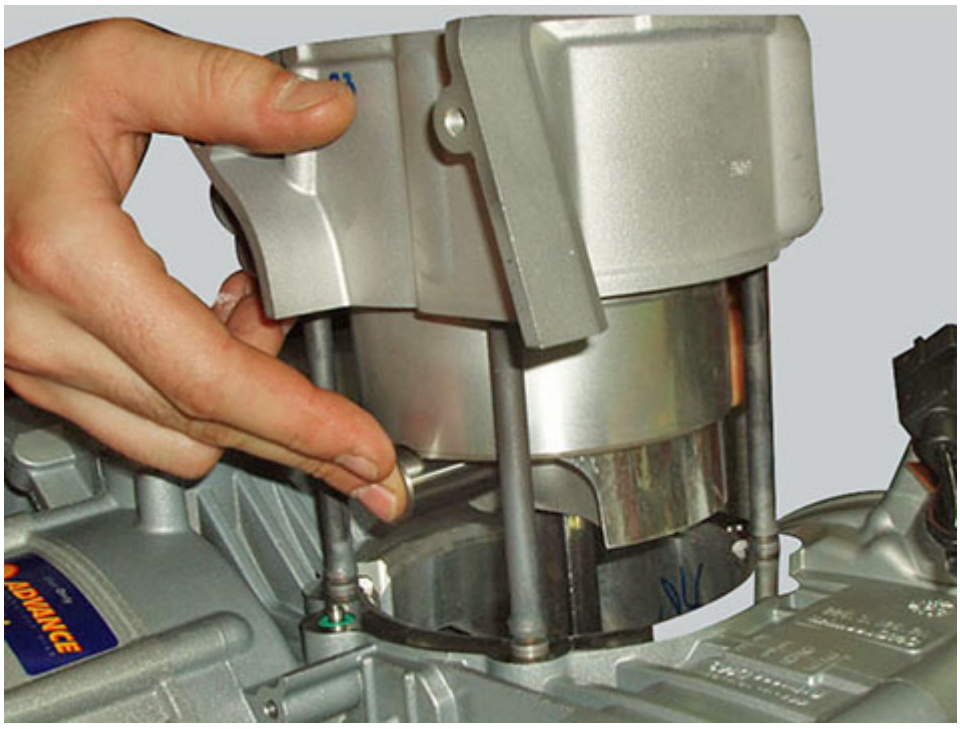

Remove from the cylinder head stud bolts the four O-rings (A) located on the crankcase between the cylinder and the gasket (11).

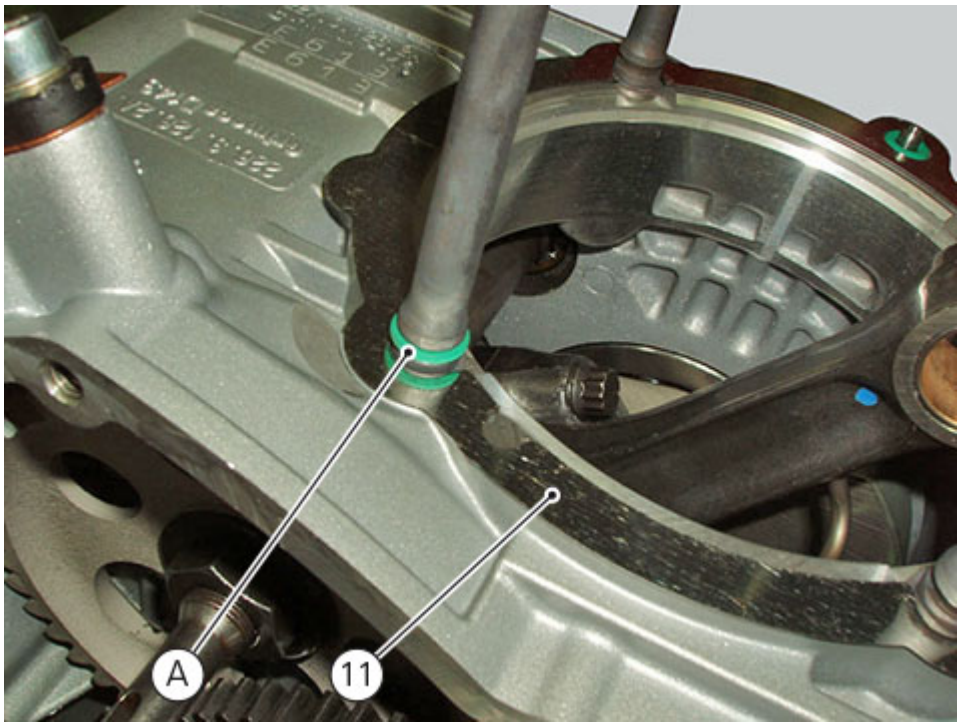

To remove the horizontal cylinder-piston assembly, bring the horizontal piston to TDC and proceed as for removal of the vertical cylinder.

Important

Mark the pistons to show from which cylinder they were removed:
V= Vertical - O= Horizontal.

Refitting the clutch

Position the spacer (12).

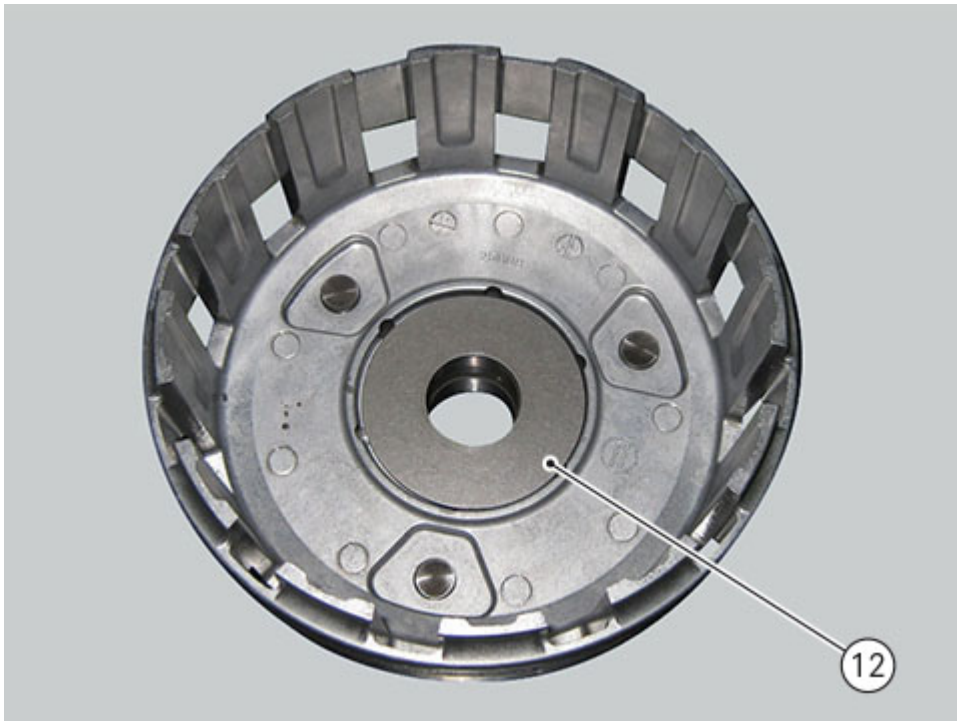

Fit the flat ring (14) and the Belleville washer (13) on the clutch drum (8), so that the convex side faces the clutch drum.

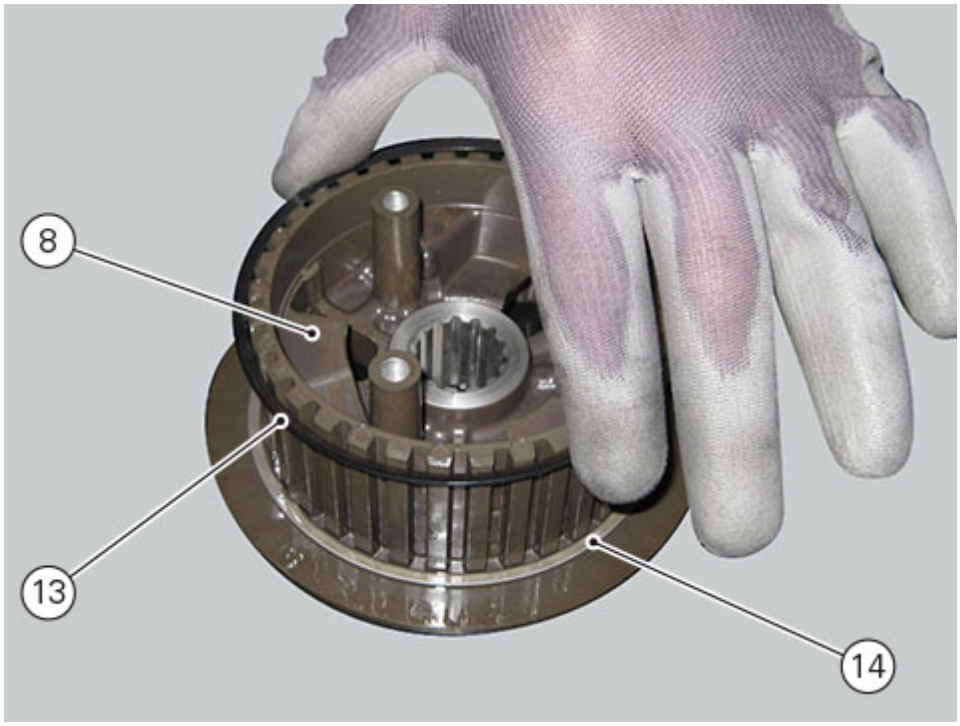

Locate the Belleville washer (10).

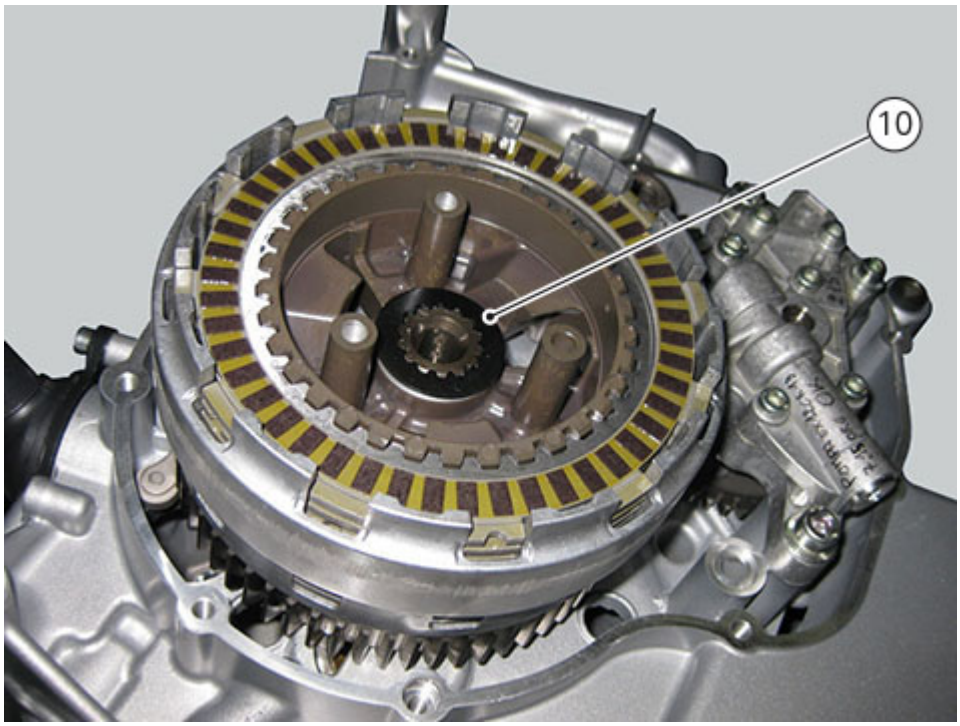

Ft the clutch plates (11) in the following order:
on drum (3):

- a set of ten driving plates (L) alternately to nine driven plates (I) 2 mm thick;

on the pusher plate (4):

- one driven plate (H) 2 mm thick;
- one driving plate (L).

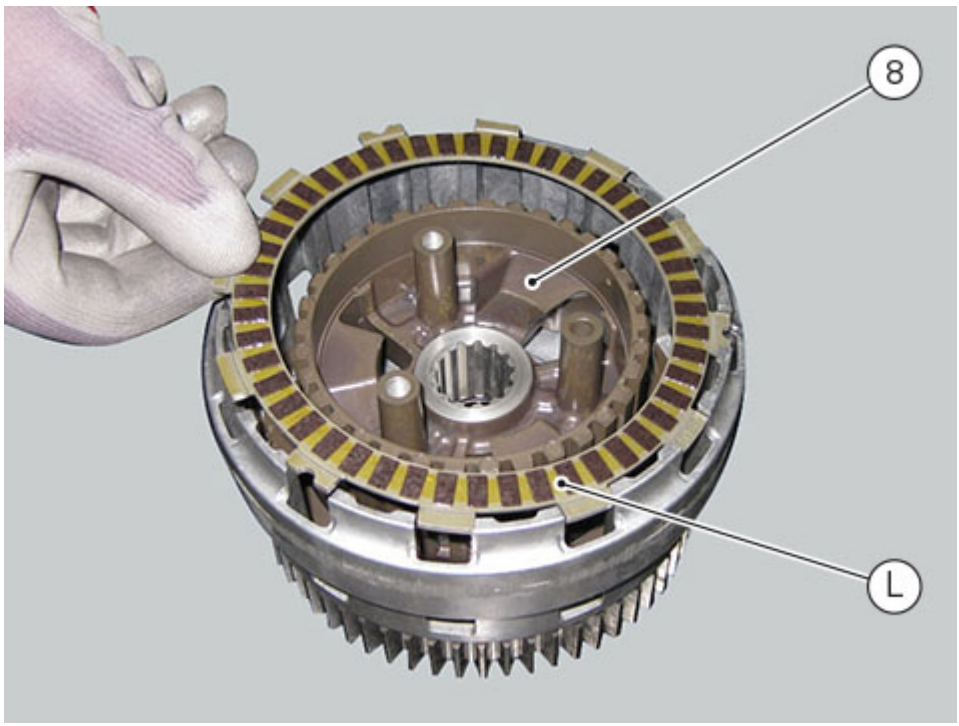

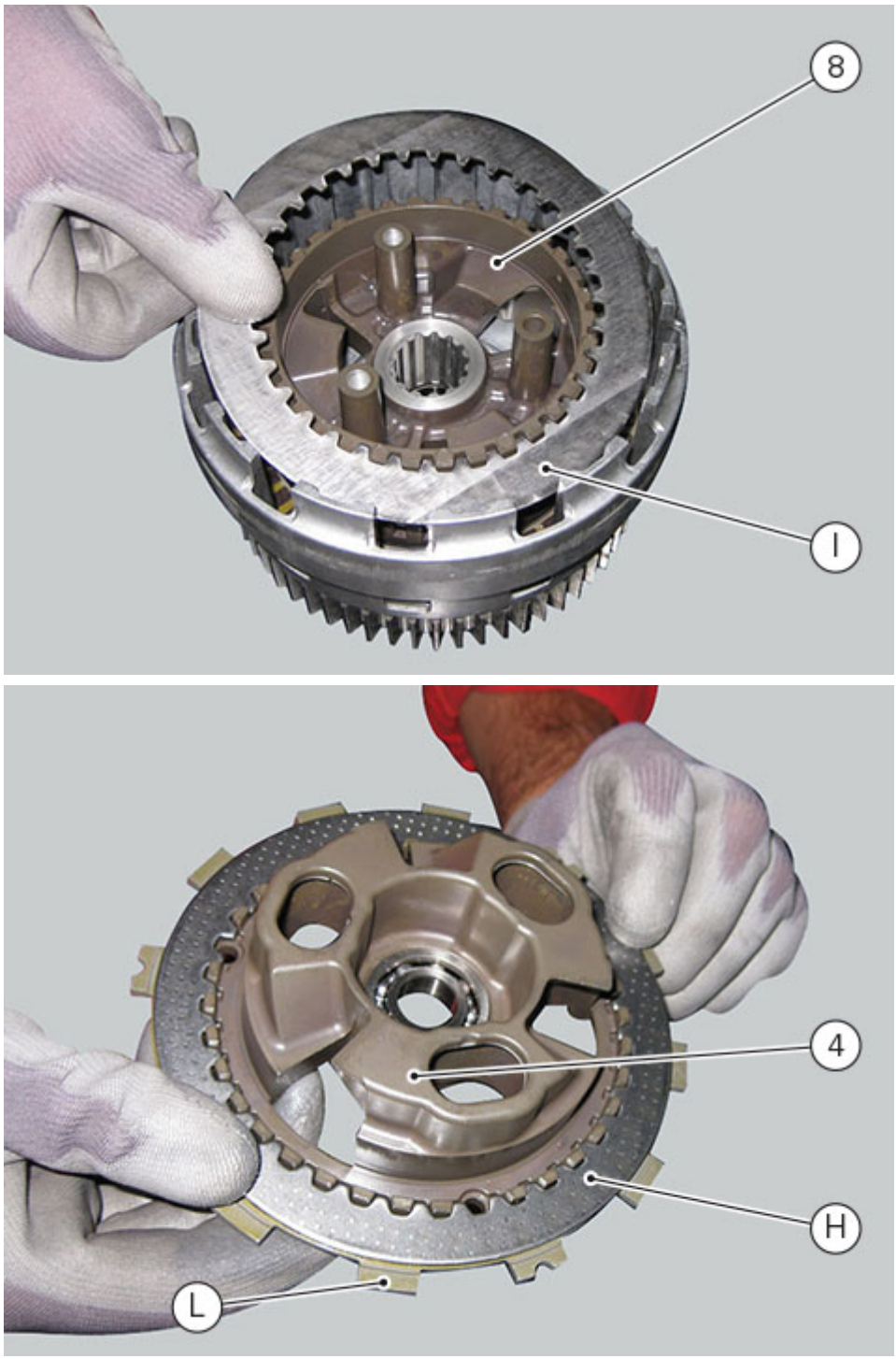

Apply the prescribed grease to the thread of the gearbox primary shaft and the mating surface of nut (9), and fit it over Belleville washer (10).
Block the clutch drum using tool part no. **88713.3408** and tighten the retaining nut (9) to a torque of 190 Nm (Min. 180 Nm - Max. 200 Nm).



Insert the control pin (6) in the bearing (7) and the latter in the gearbox primary shaft.



Place the pusher plate (4) with the two plates on the centring tool (A) part no. **88713.3352**.

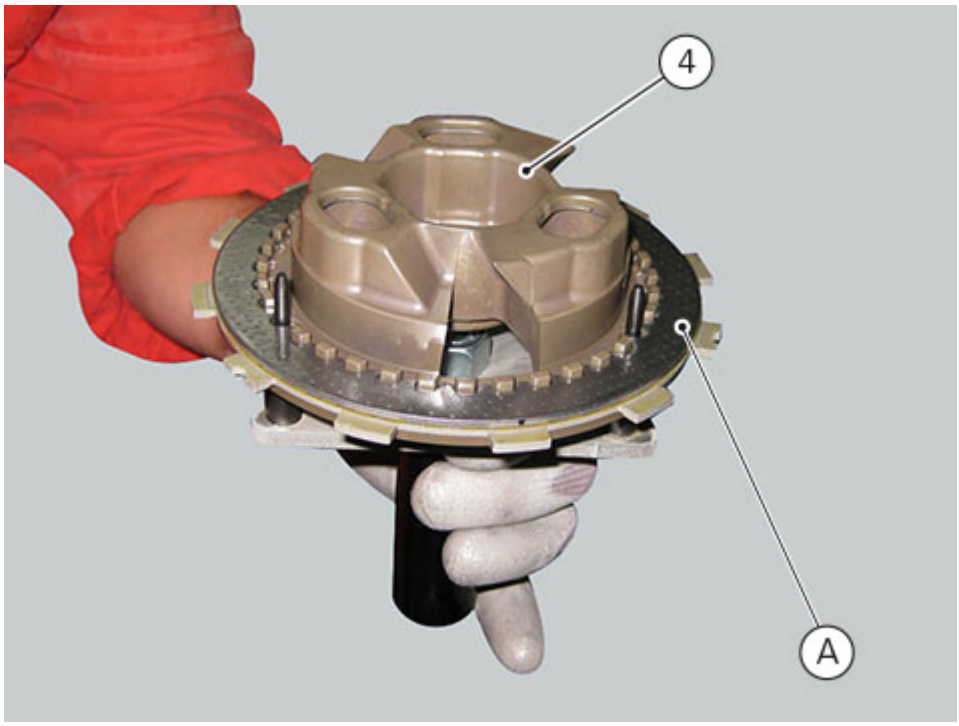

Fit the pressure plate (4).

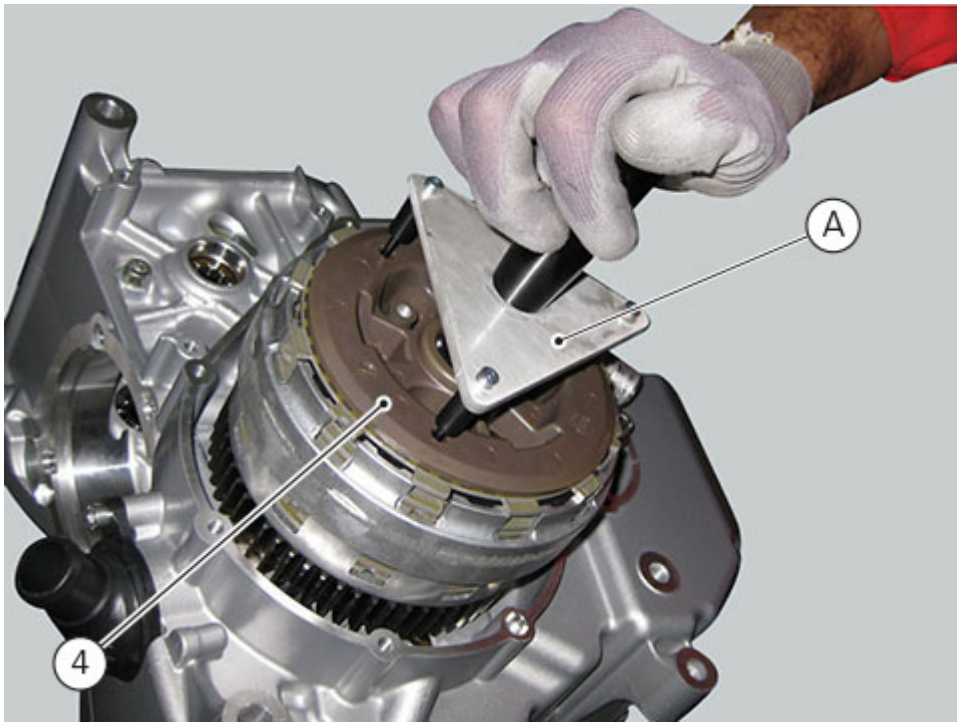

Insert a spring (3) in each recess.
Position ring (2).
Lubricate the thread of the screws (1) with oil.
Start screws (1).

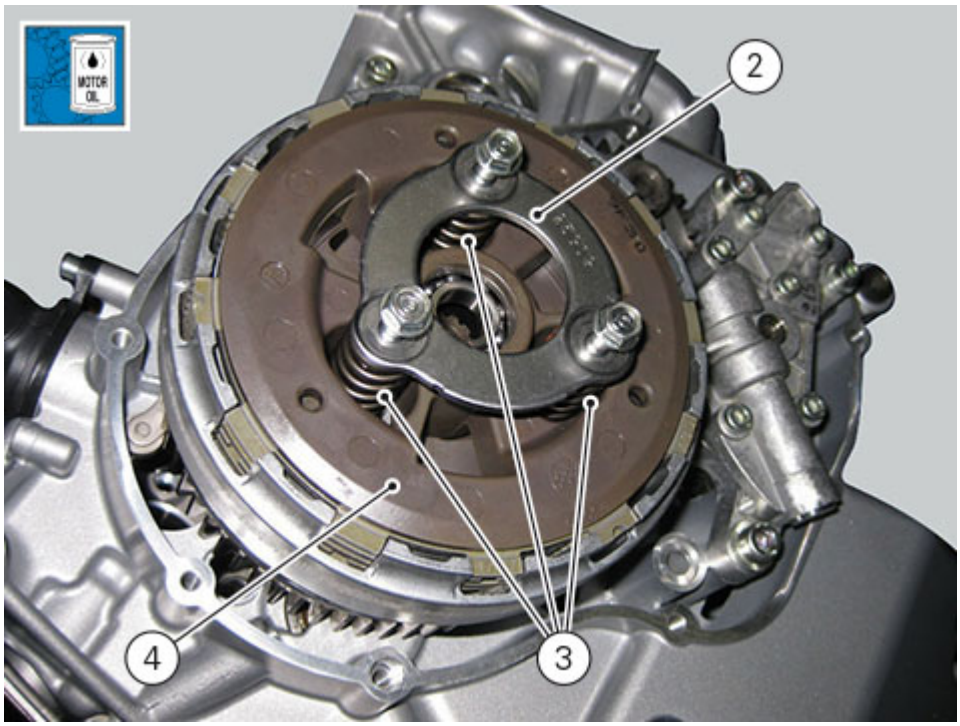

Tighten the screws (1) to a torque of 10 Nm (Min. 9 Nm - Max. 11 Nm).

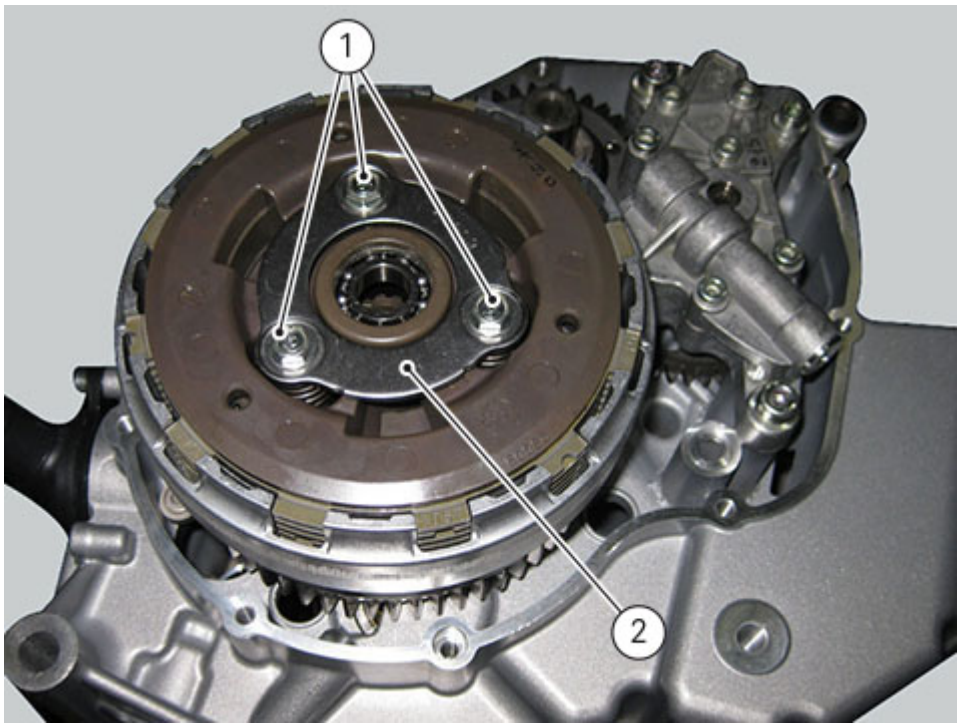

Refit the clutch cover (Refitting the clutch cover).
Fill the engine with oil (Changing the engine oil and filter cartridge).

Checking and overhauling the components

Clearance between the clutch housing and friction plate

Insert a friction plate (E) in the clutch housing (F) and measure the clearance (S) with a feeler gauge.
Clearance "S" must not exceed 0.6 mm.
If it does, replace the plates and, if necessary, the clutch housing.

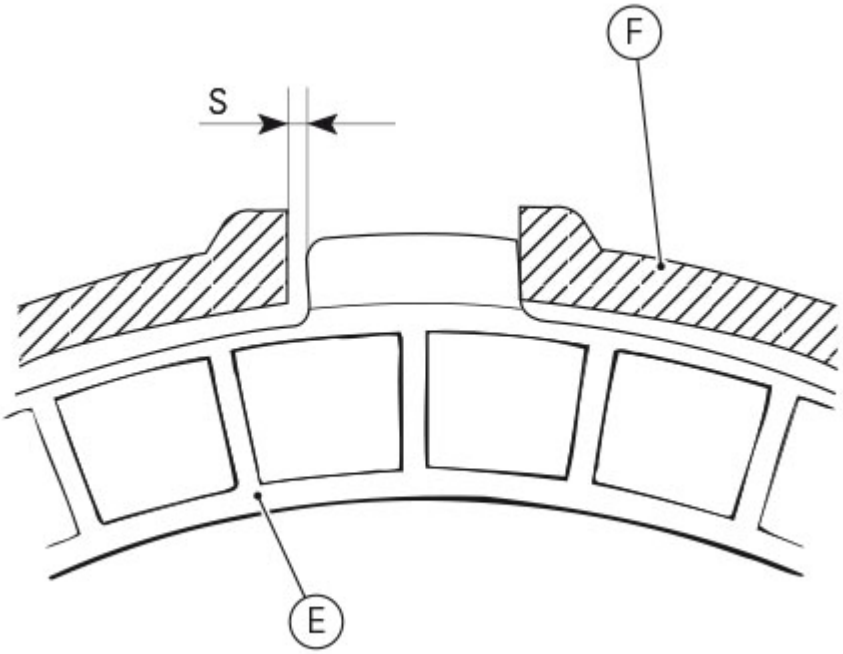

Overhauling the clutch plates

The clutch plates must not show any signs of blackening, grooves or deformation.
Measure the thickness of the friction plates; it should not be less than 2.6 mm.

Important
The total thickness of the plates pack must not be less than 46.1 mm.

Place the plate on a flat surface and check the amount of deformation with a feeler gauge.
Max. flatness error: 0.2 mm.

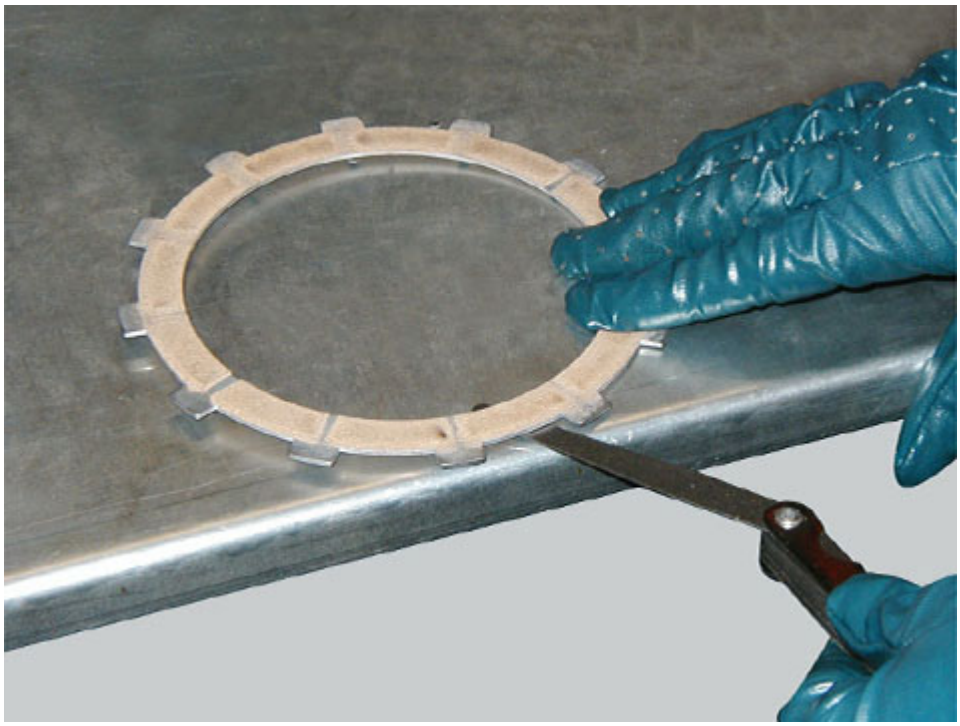

Overhauling the pressure plate

Check bearing (7) conditions: replace the bearing if the play is excessive.
Check the contact surface of the last friction plate; if extremely scored, polish it in the same manner as described previously for the cylinder head surface (Overhauling the cylinder head components).
Check the condition of the spring guide seats (G) of pusher plate (4) and of snap rings (5).

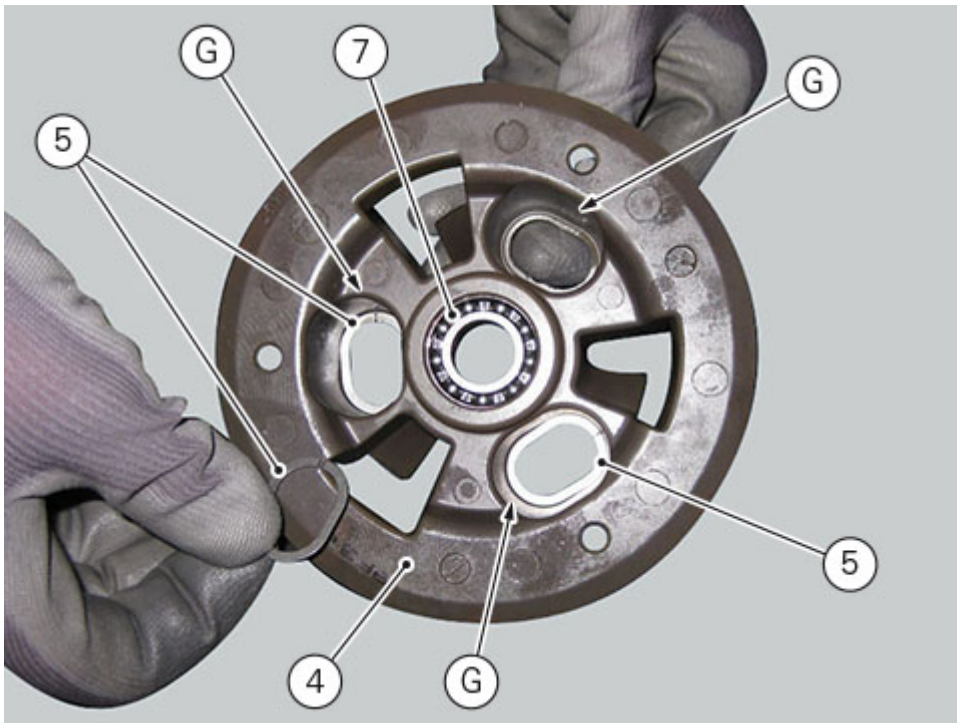

Overhauling the pusher plate springs

Measure the uncompressed length "L" of each spring (3).
Minimum length: 41 mm.
Replace any springs that are shorter than the above limit value.

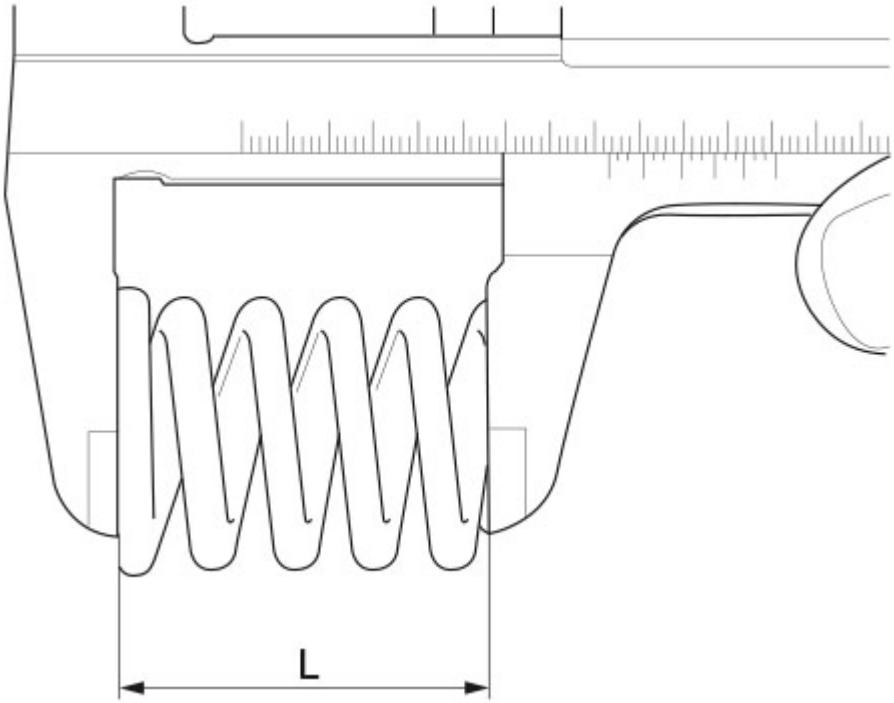
L

Removing the clutch

Drain the engine oil (Changing the engine oil and filter cartridge).
Remove the clutch cover (Removing the clutch cover).

Note
For clarity, the figures show the engine removed from the frame.

Undo the fixing screws (1) and remove the ring (2) and the springs (3) from the pusher plate (4).

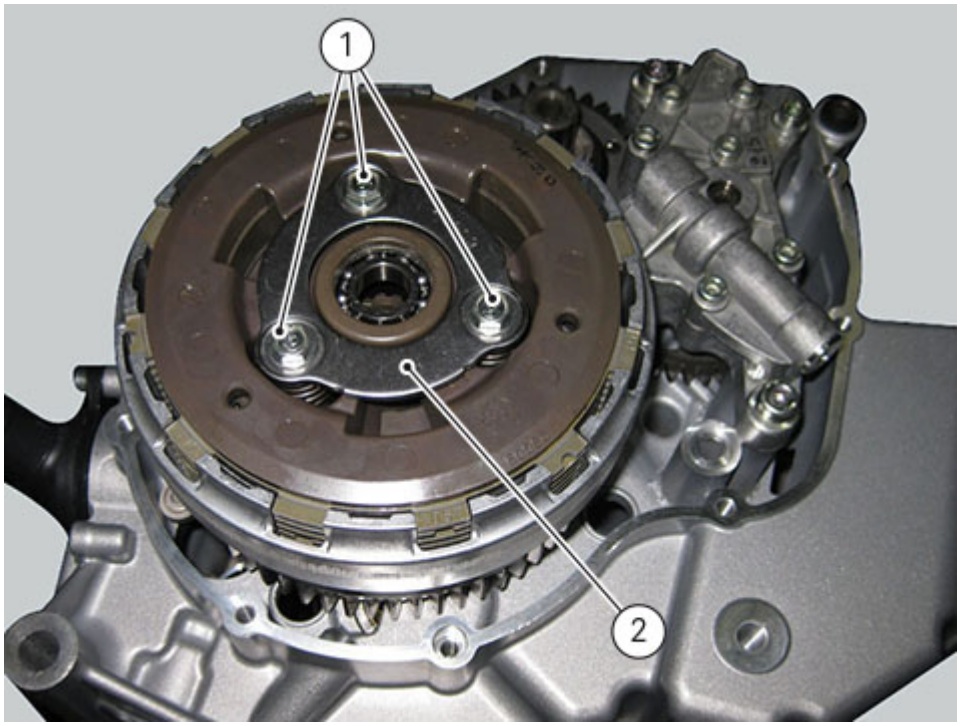

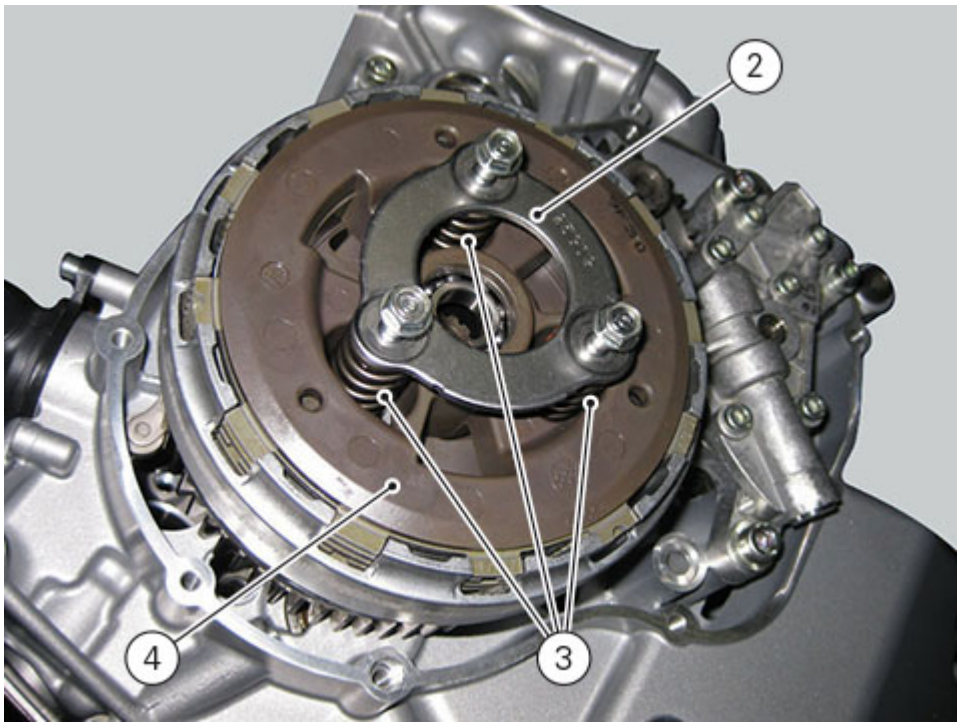

Slide out pusher plate (4) taking care not to damage snap rings (5).

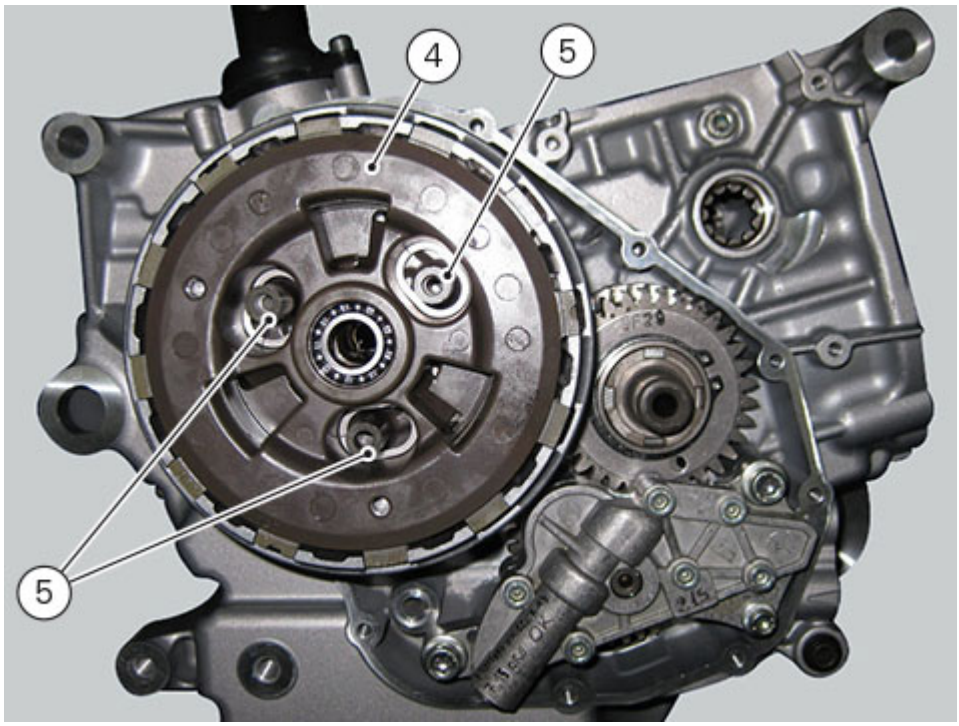

Remove the clutch control pin (6) and bearing (7).



Block clutch drum (8) using the tool part no. **88713.3408** and loosen retaining nut (9).



Remove Belleville washer (10), slide out clutch drum (8) and remove clutch plates (11) from the clutch housing.

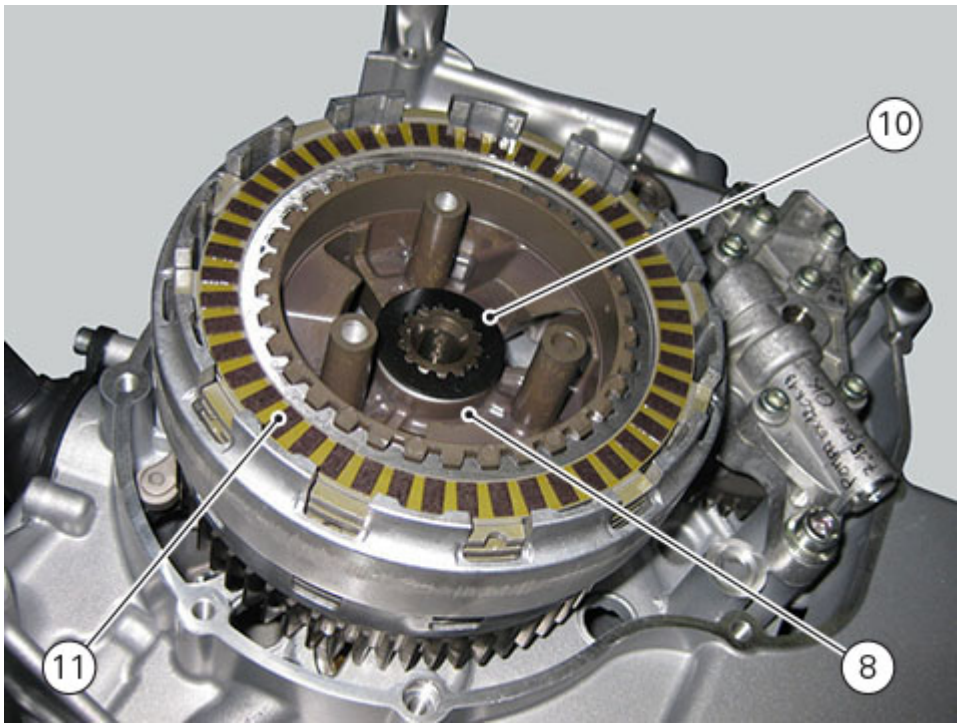

When removing the plates (11), keep them paired in the assembly order and set them aside tied together, if necessary.

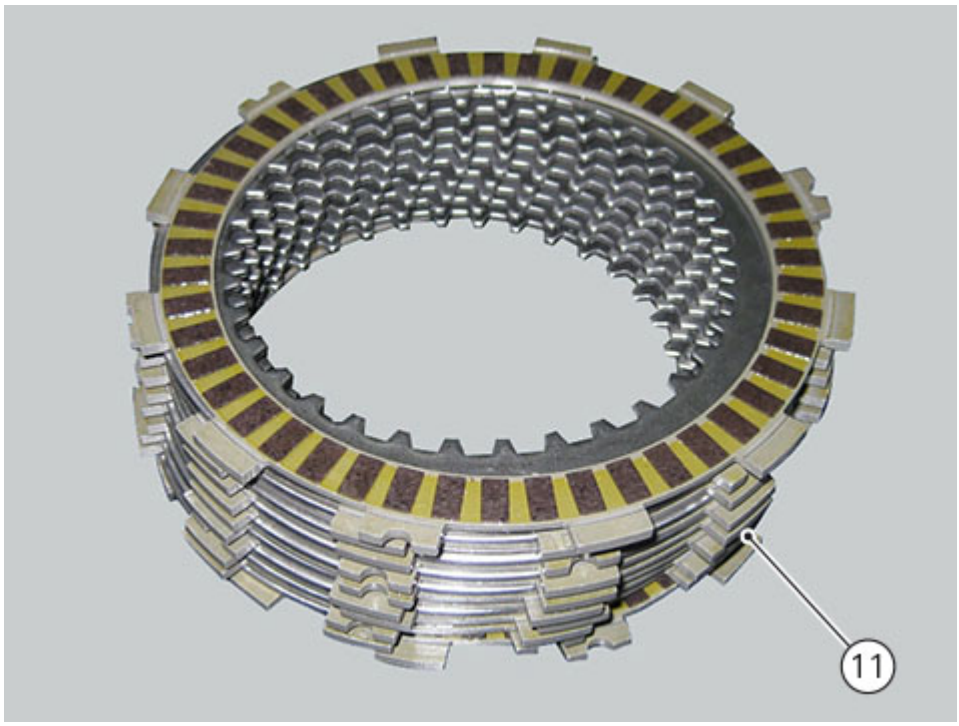

Slide out the spacer (12).

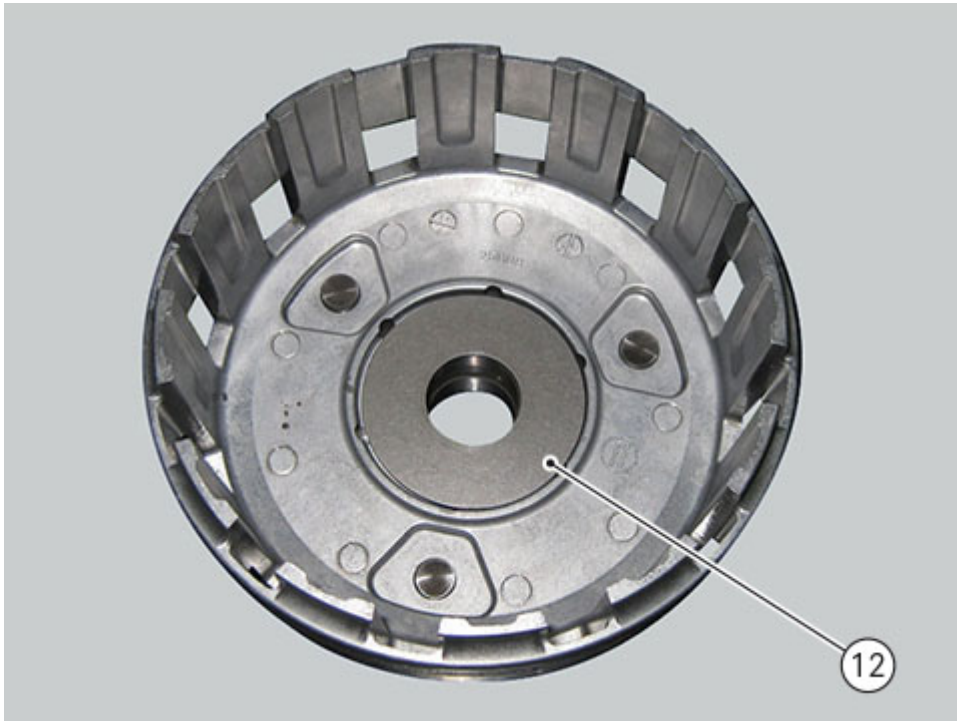

Withdraw the Belleville washer (13) and flat ring (14) from the clutch drum (8).

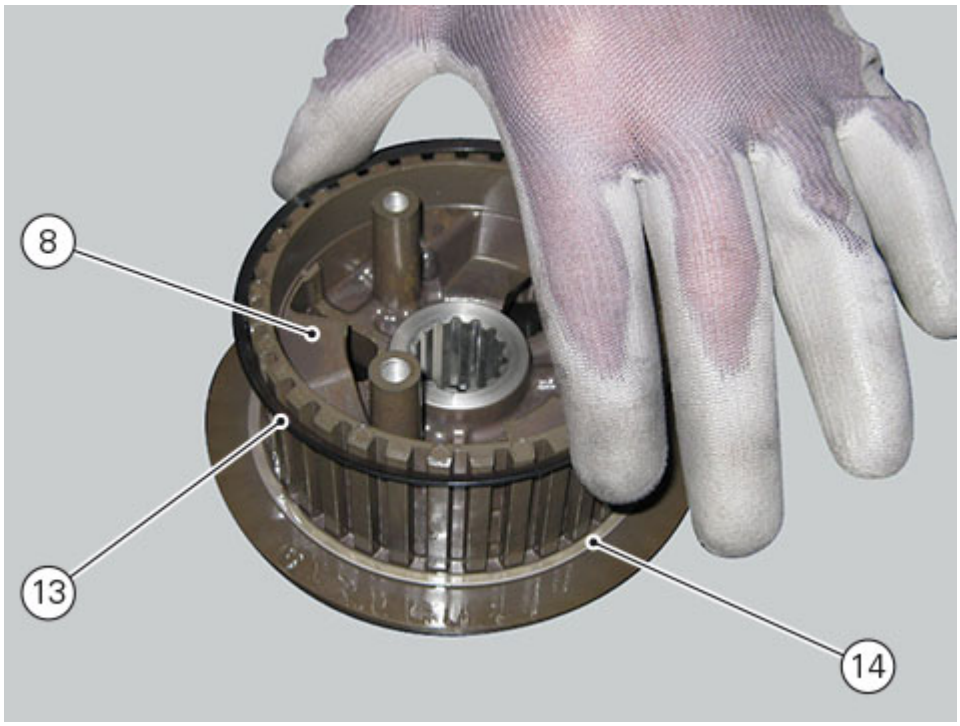
8
13
14

Description of the clutch assembly

The clutch is disengaged by a transmission unit consisting of a thrust piston (C) accommodated inside a support mounted to the generator cover. This piston (C) pushes a pushrod (B), which runs through gearbox primary shaft and operates the pressure plate (1) located on top of the clutch plate pack (2).
Drive is transmitted from the crankshaft to the gearbox primary shaft by a gear integrated with the clutch housing/primary drive gear pair (A).
Accommodated in the clutch housing is a set of driving and driven plate pack (2). When the clutch is operated, the driven plates push away a drum (3) which is splined onto the gearbox primary shaft.
Before working on the internal clutch parts, check that the clutch operates correctly. Then deal with the problem in a systematic manner.

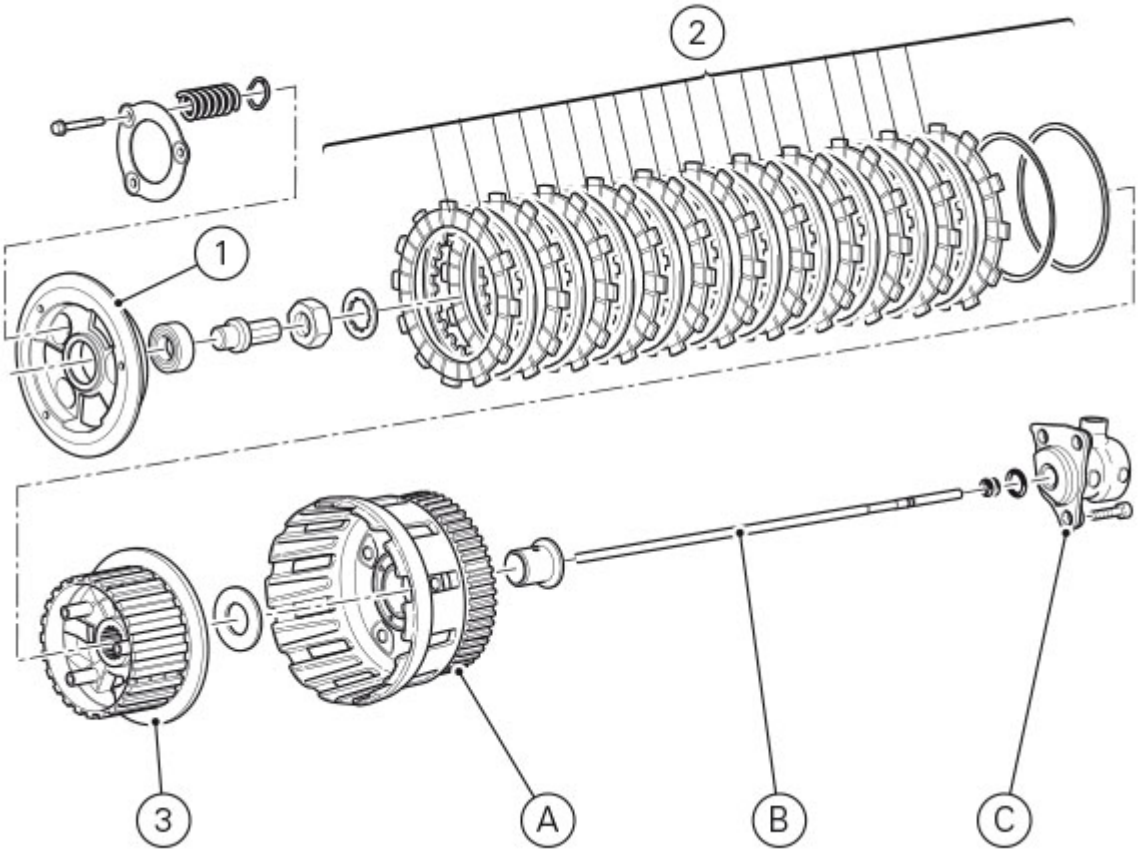

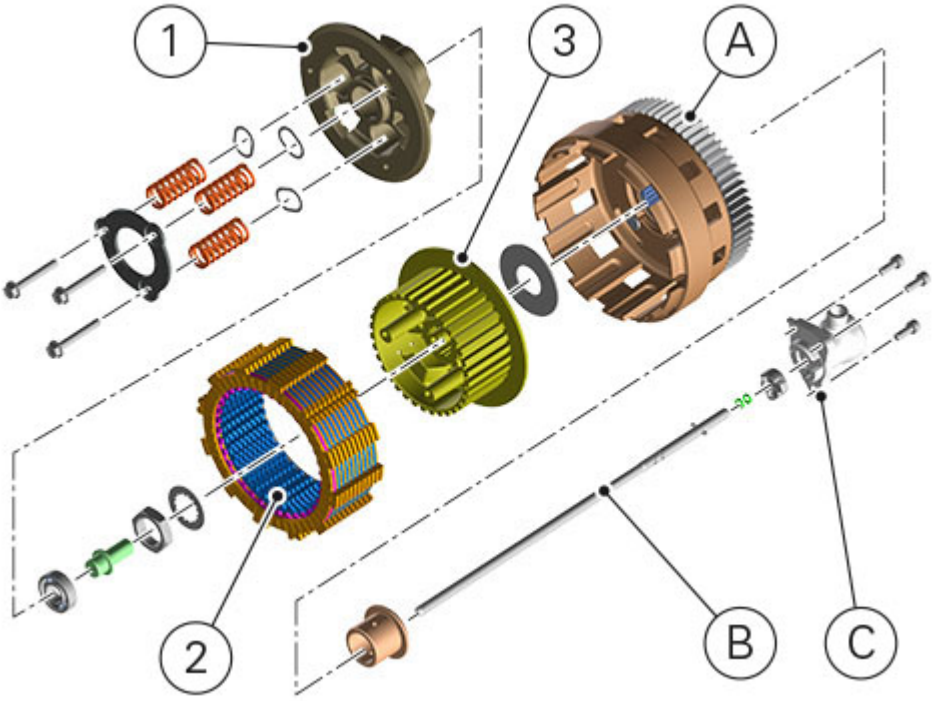

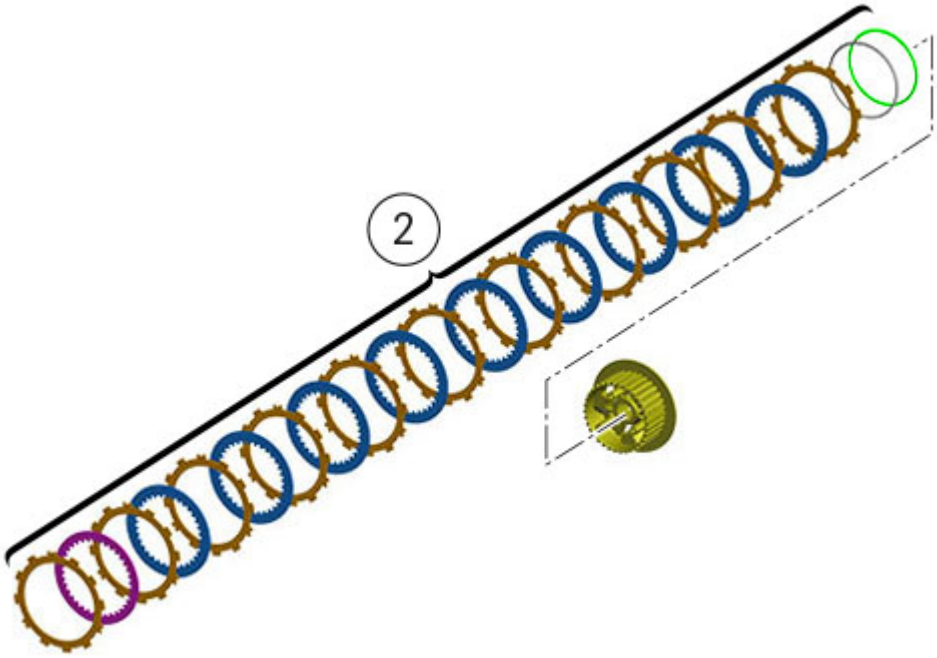

Clutch pack exploded view colour coding:
- brown: driving plates (2.8 mm thickness);
- purple: first driven plate (2.0 mm thickness);
- light blue: driven plates (2.0 mm thickness);
- grey: vibration damping Belleville washer (1.0 mm thickness);
- green: vibration damping plate (1.2 mm thickness).

Thickness of complete clutch plate pack (driving and driven plates only): 50.8 (+0.3; – 0.7) mm.

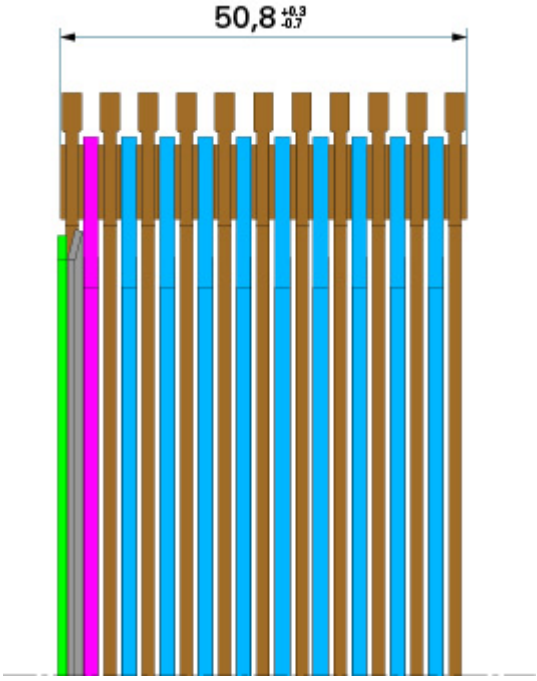

The following is a list of possible causes of clutch malfunction.

A clutch that does not disengage may have the following problems:

- excessive play of the control lever;
- distorted clutch plates;
- incorrect spring tension;
- faulty clutch release mechanism;
- excessive wear of the hub or clutch housing.

A clutch which slips may be caused by:

- no backlash of the control lever;
- worn clutch plates;
- weakened springs;
- faulty clutch release mechanism;
- excessive wear of the hub or clutch housing.

A noisy clutch may be caused by:

- excessive backlash between the primary drive gears;
- damaged primary drive gear teeth;
- excessive housing between driving plate tabs and the clutch housing;
- worn gear/clutch housing bearings;
- the presence of metal particles (filings) on the gear teeth.

Refitting the clutch cover

Clean and degrease mating surfaces on cover and crankcase half, and ensure that centring bush (5) and the O-ring (6), located in correspondence with the oil way, are installed on the crankcase.

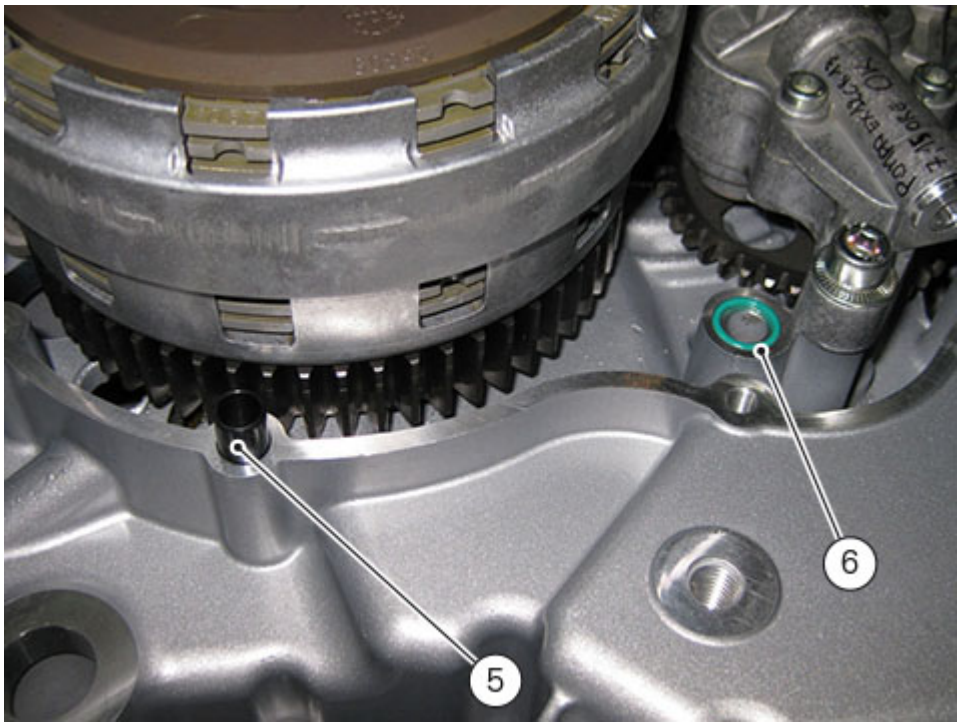

Apply an even, regular bead of DUCATI sealing compound (A) on the mating surface of the crankcase half and around all holes.

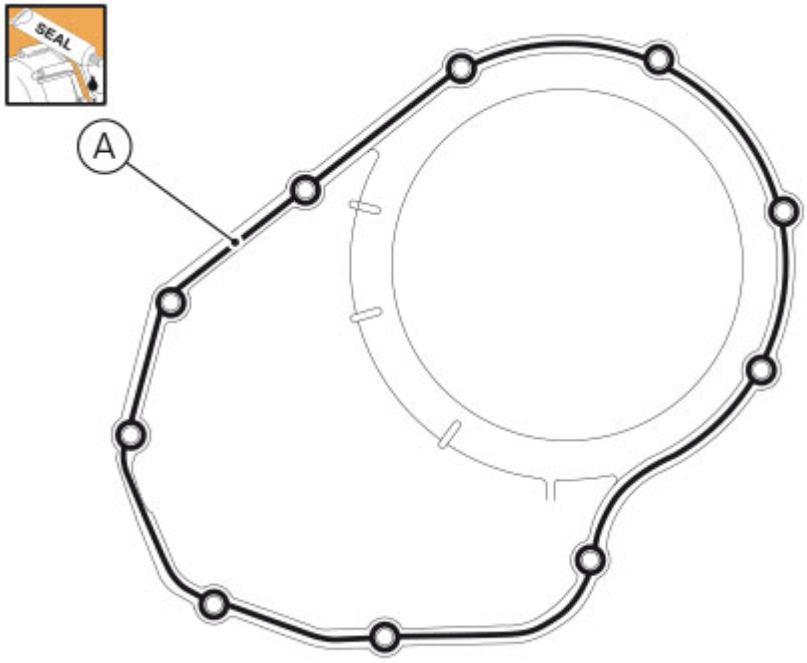

Fit the complete cover (1) to the crankcase halves and start the retaining screws.
Apply the specified threadlocker to screws (2) and (3).
Tighten the screws (2) and (3) to a torque of 10 Nm (Min. 9 Nm - Max. 11 Nm) in a crossed-pattern sequence.

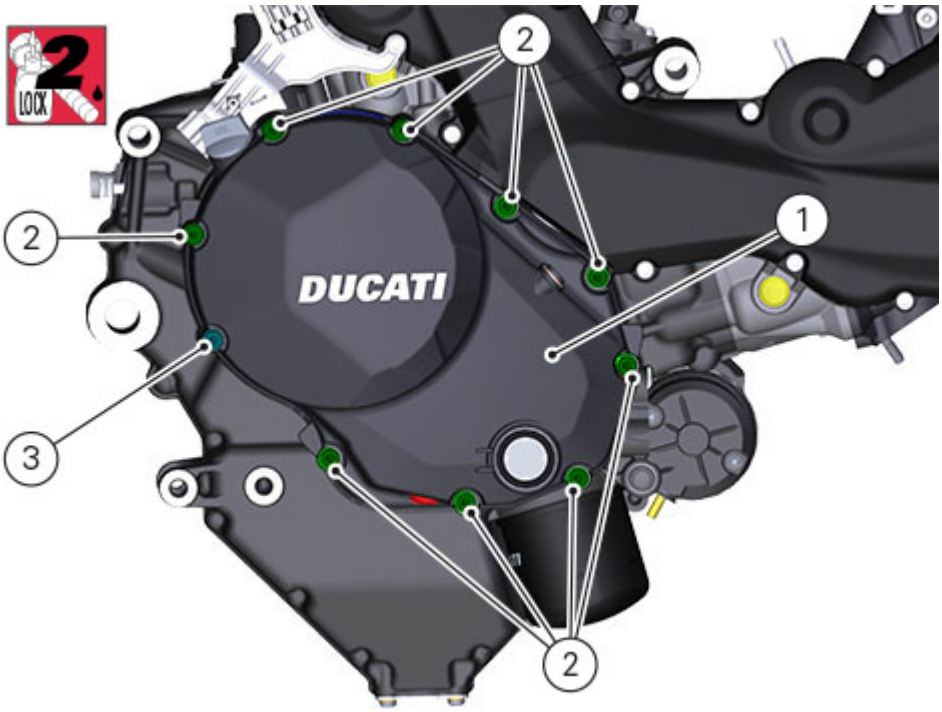

Fill with engine oil (Changing the engine oil and filter cartridge).

Reassembling the clutch cover

Fit plug (1) and tighten it to a torque of 5 Nm (Min. 4.5 Nm - Max. 5.5 Nm), with gasket (2).
Fit plug (3) and tighten it to a torque of 5 Nm (Min. 4.5 Nm - Max. 5.5 Nm), with gasket (4).

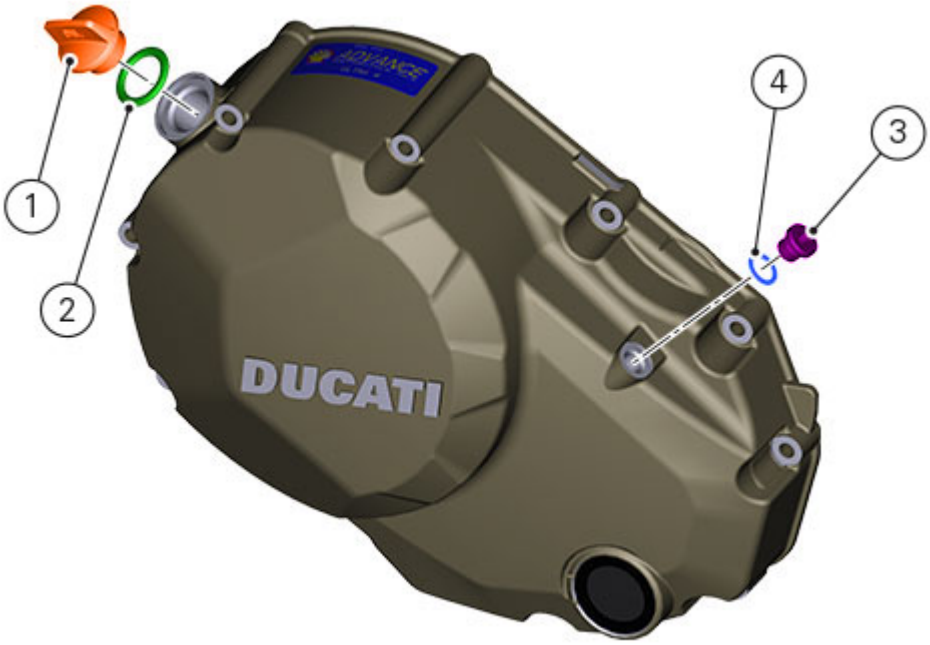

Position oil pump sound-deadening sheet (14) and oil pump sound-deadening panel (13).
Apply the indicated product and tighten screws (12) to a torque of 12Nm (Min.10Nm ÷ Max.14Nm).

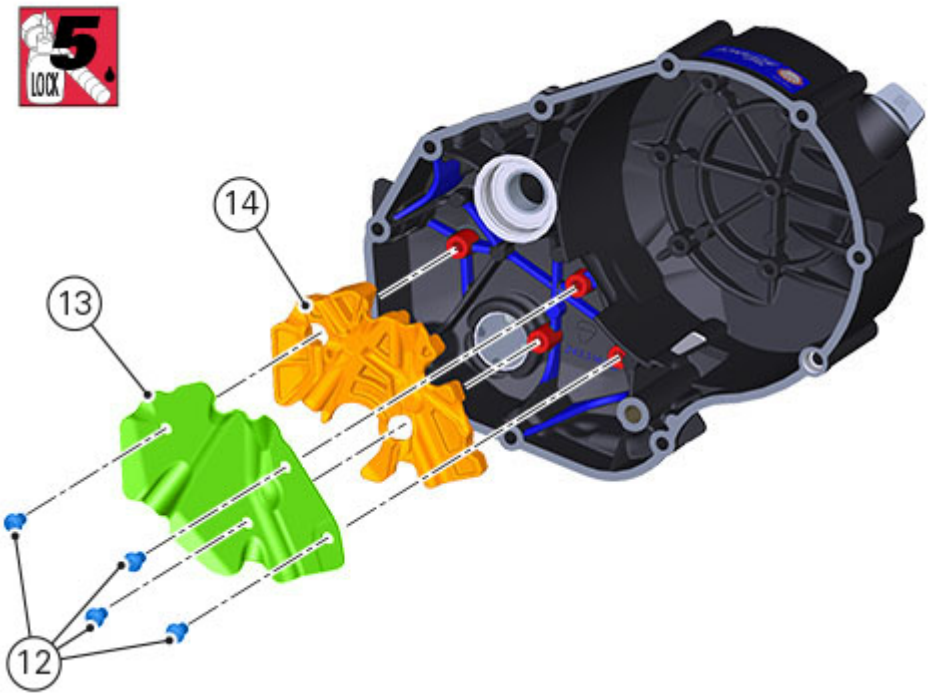

If the bush has been replaced, fully seat the new bush (11), previously greased with the specified product, in the slot in the cover using a suitable drift and a press.

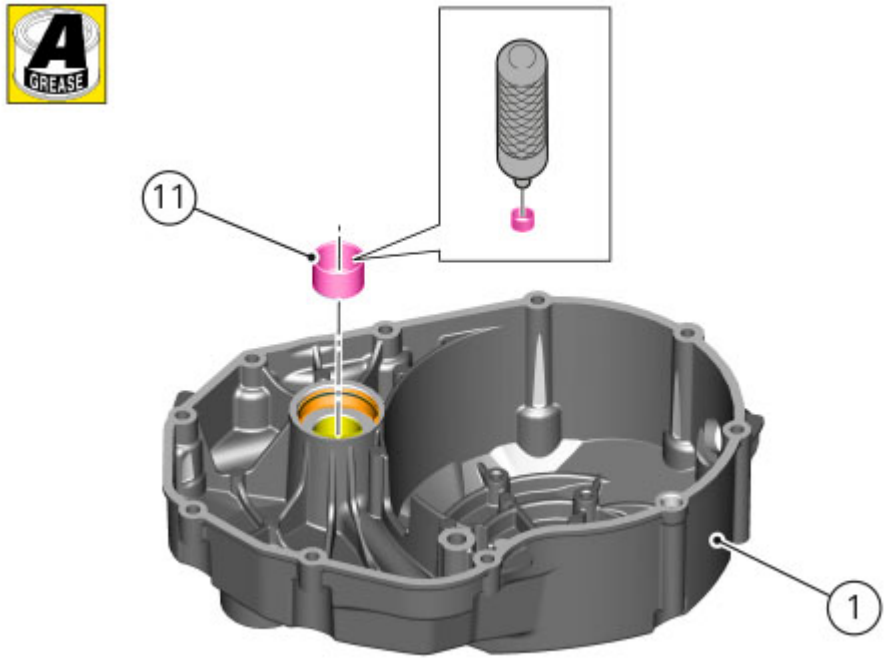

If the sealing ring (10) needs to be replaced, fit the new seal into the crankcase cover, positioning it so that the side without a spring is facing the circlip (8).
Before fitting, check that the edges of the circlip groove show no sign of burrs which might otherwise damage the sealing ring.
Then fit the shim (9) and the circlip (8).

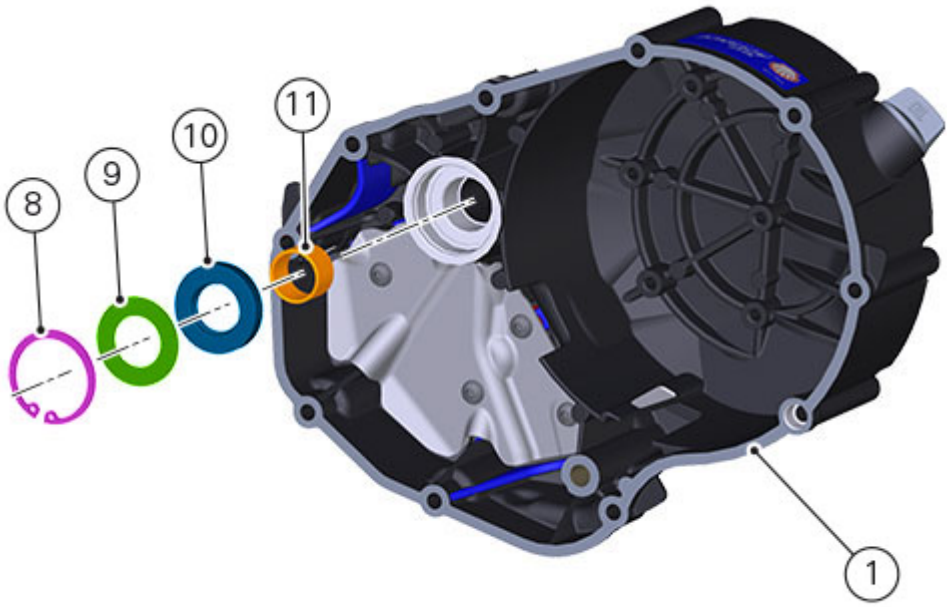

In order for the sealing ring (10) to perform correctly, it must have an assembly clearance that allows the circlip (8) to rotate.
Make sure circlip (8) is completely inside seat.

Position the soundproofing panel (7) inside the clutch cover as shown in the figure. Position the internal cover (6) on panel (7).
Apply the specified product to screws (5).
Tighten the retaining screw (5) to a torque of 8 Nm (Min. 7 Nm - Max. 9 Nm).

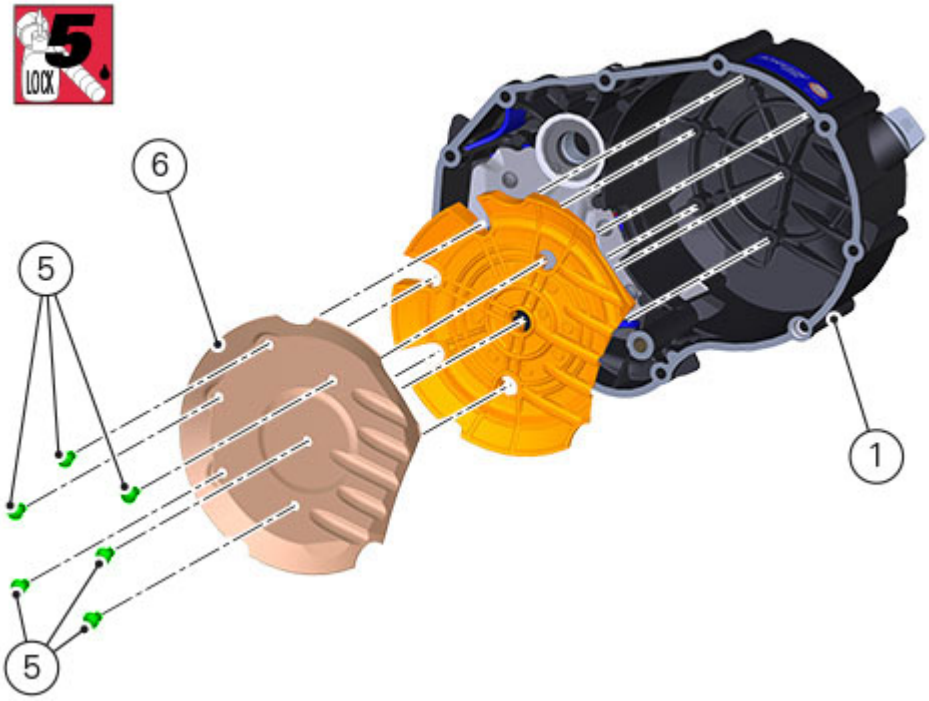
5
LOCK
6
5
1
5

Disassembling the clutch cover

Remove the plug (1) and the relevant O-ring (2) from the cover, the plug (3) and its seal (4).

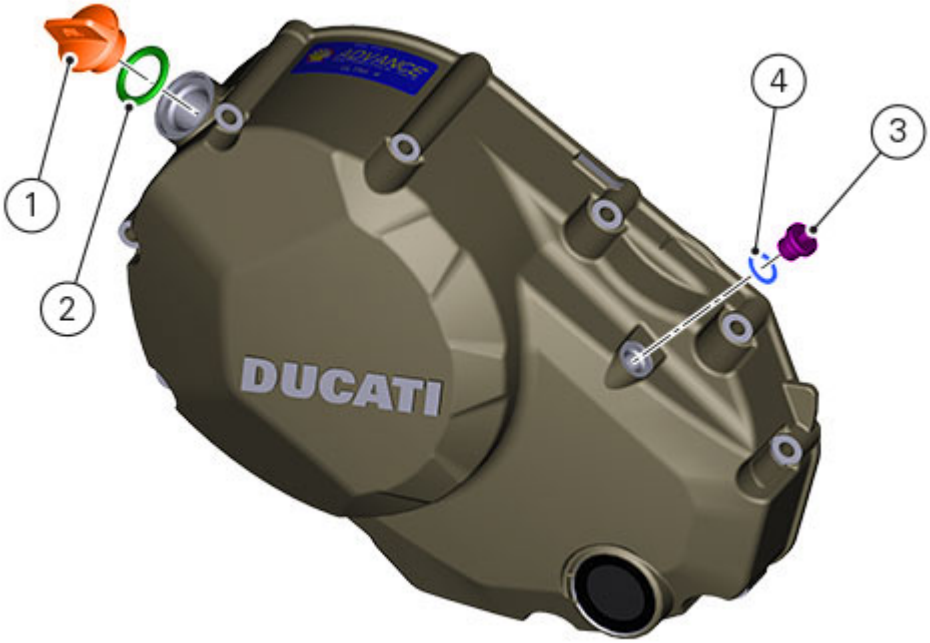

Undo the fixing screw (5) of the inner cover (6).
Remove the inner cover (6) and the soundproofing panel (7).

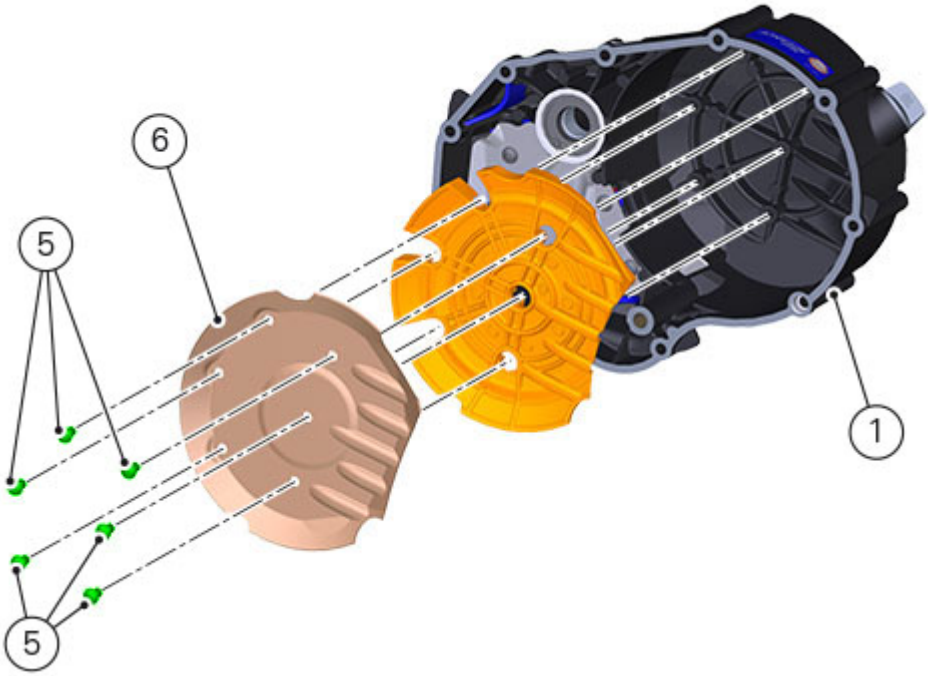

Remove the circlip (8) and withdraw the shim (9) and the sealing ring (10).
The drilled bush (11) is mounted to the cover by a forced interference fit. Remove it using a suitable puller.

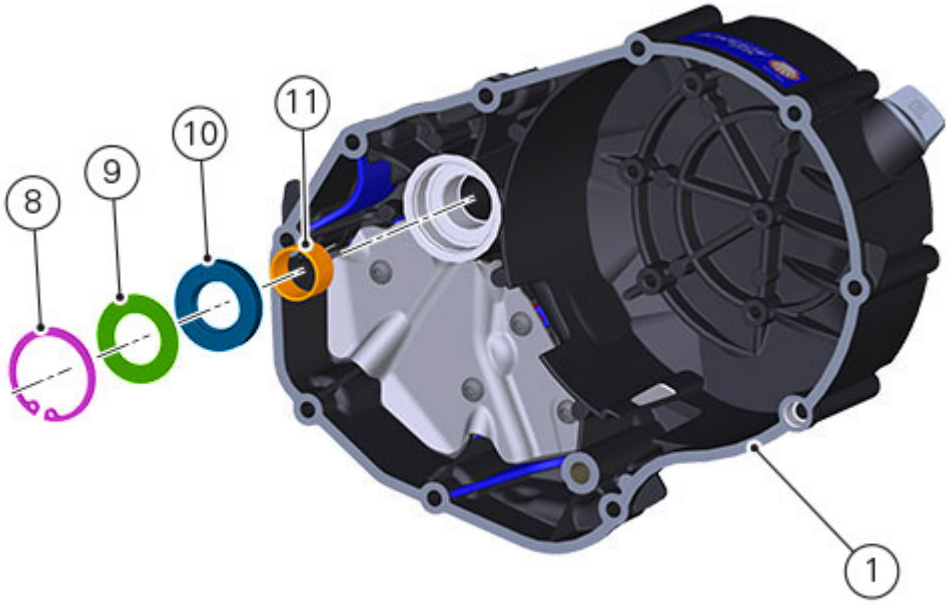

Visually inspect the sealing ring (10) and replace it if necessary.
Loosen oil pump sound-deadening panel (13) retaining screws (12).
Remove oil pump sound-deadening panel (13) and oil pump sound-deadening sheet (14).

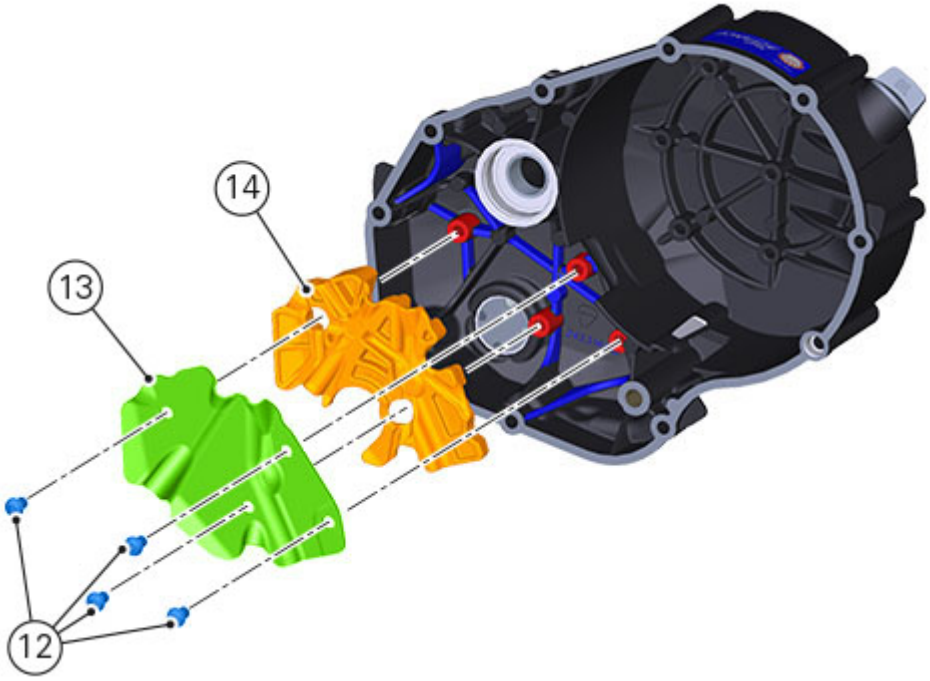

Removing the clutch cover

Drain the engine oil (Changing the engine oil and filter cartridge).

Loosen the fastening screws (2) and (3) on the clutch cover (1).

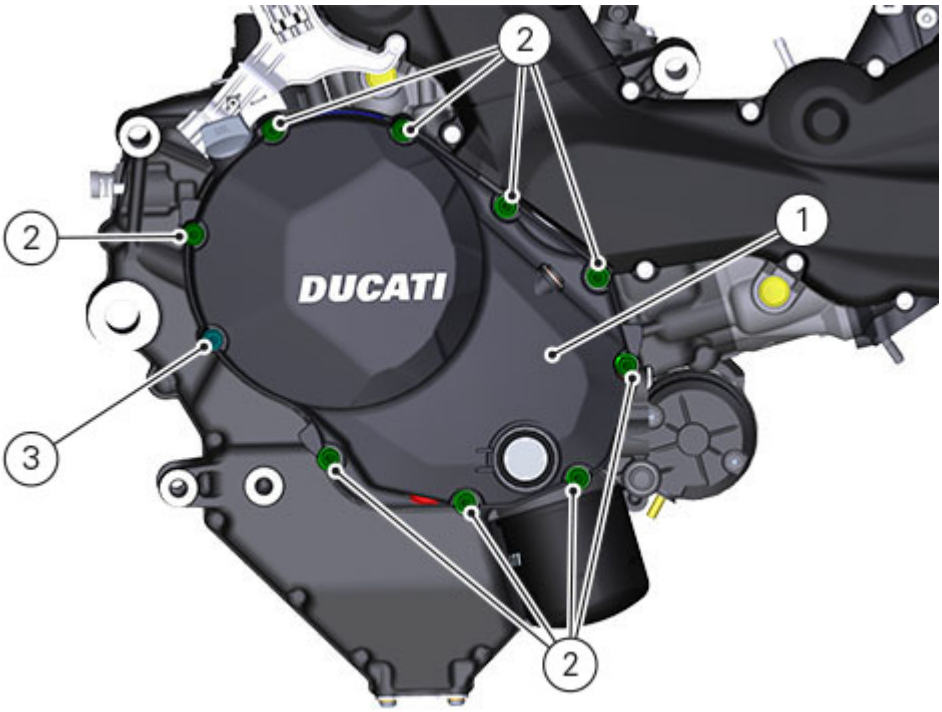

Tap around the edge of the cover with a plastic mallet to detach it from the crankcase half.
Remove the clutch cover (1) paying attention to the centring bush (5) and O-ring (6).
Check the condition of the centring bush (5) and replace if deformed.

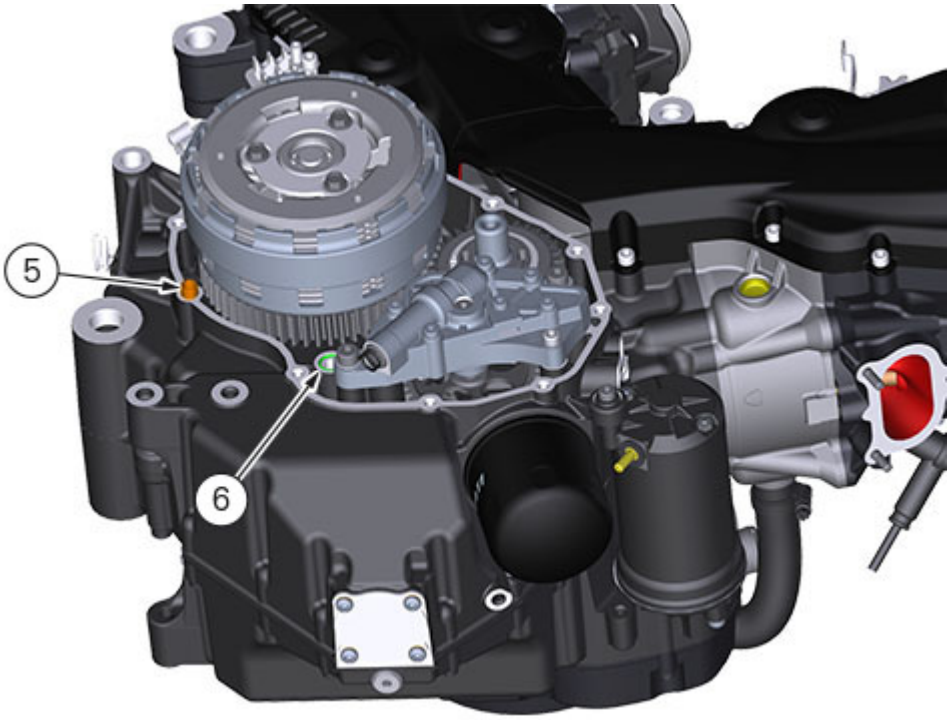

Refitting the primary drive gears and checking backlash

Fully degrease the crankshaft splined end and the corresponding spline on the primary drive gear.
Position spacer (D) on the crankshaft.

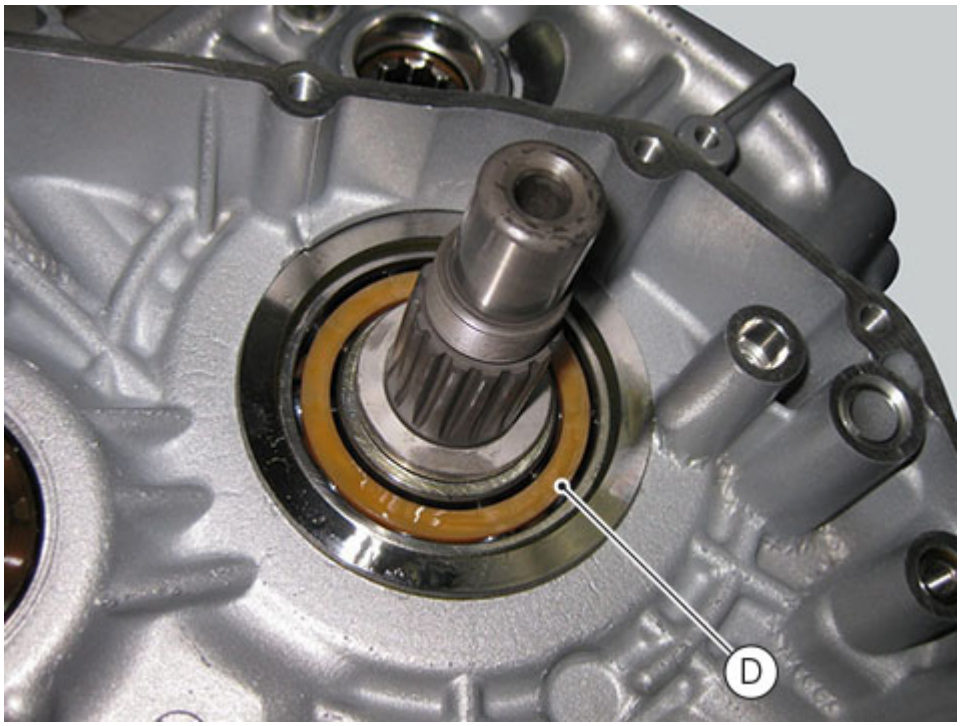

Fit the driving gear (B) onto the crankshaft with the oil pump drive sprocket facing the crankcase.

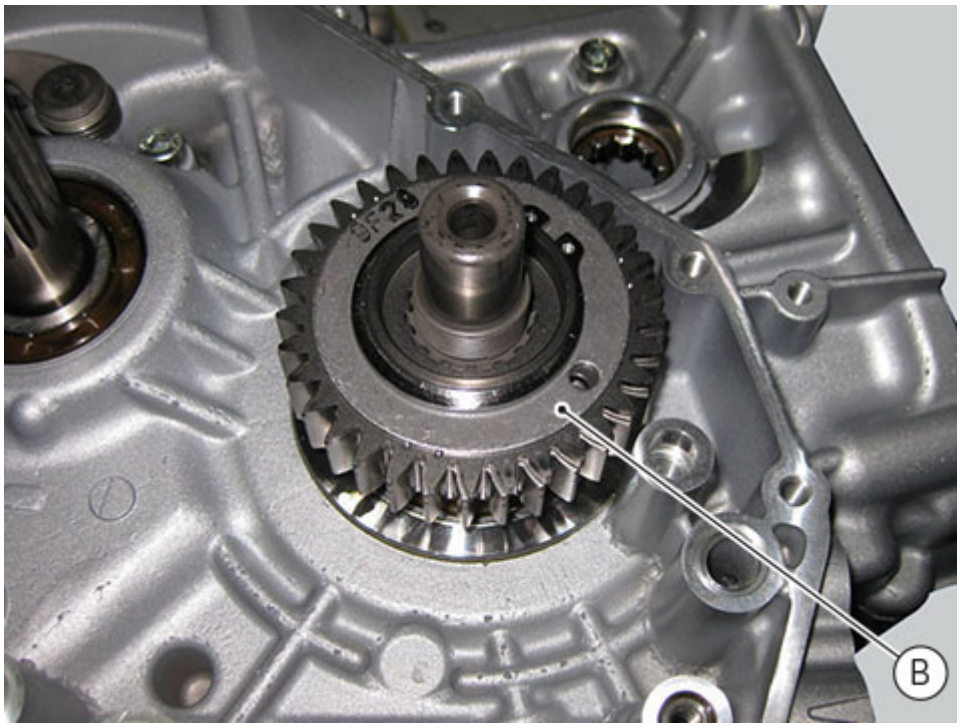

Temporarily secure the gear with the washer (4) and ring nut (3).
If fitting a new primary driving gear (B), check the backlash.

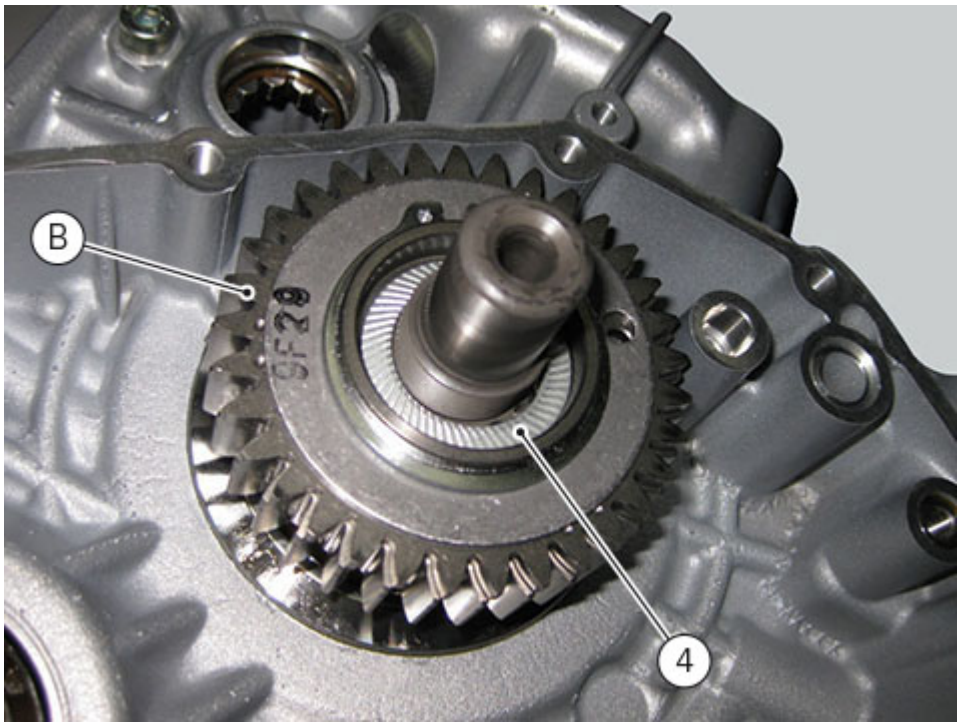

To check the backlash, temporarily fit the clutch housing (1) complete with the primary driven gear (A) on the gearbox primary shaft. Fix a dial gauge to the crankcase, positioning the stylus against a gear tooth. Turn the driven gear (A) to mesh the teeth and check that backlash ranges between 0.05 and 0.07 mm.
Repeat the check at 16 different points of the driven gear.
If the measured values are outside the tolerance limits, try changing the position of driven gear (A) on the primary shaft, leaving the driving gear (B) on the crankshaft. If the backlash is still outside the tolerance limits, replace the complete primary drive gear (1).

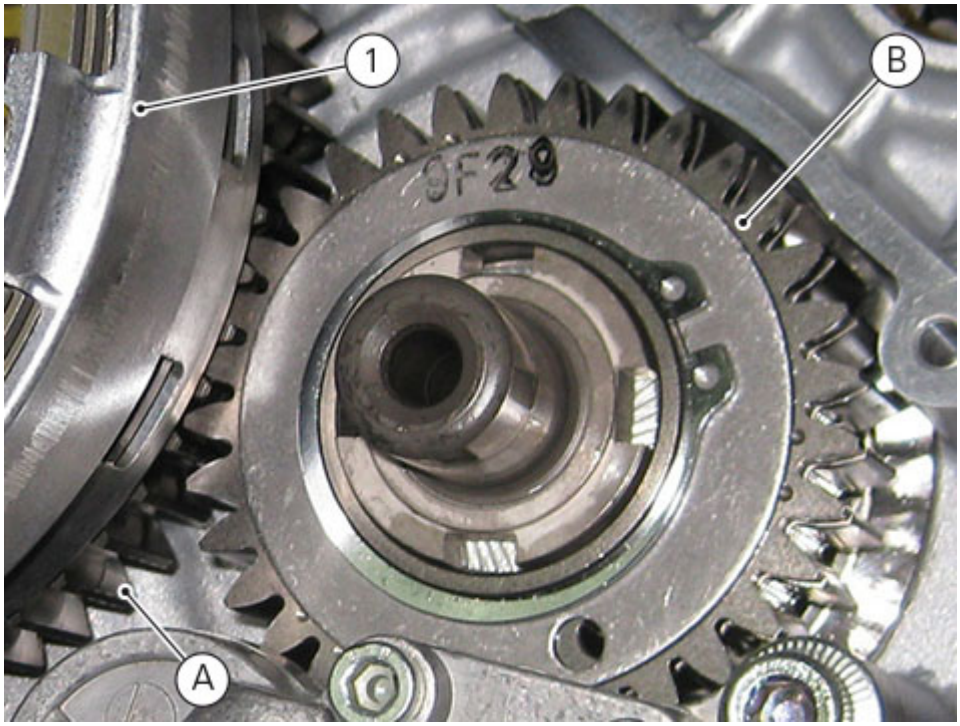

After having checked the backlash, apply bush (F) part no. **88713.3406** on a torque wrench, lock sprocket (B) with holding tool (E) part no. **88713.3417**.

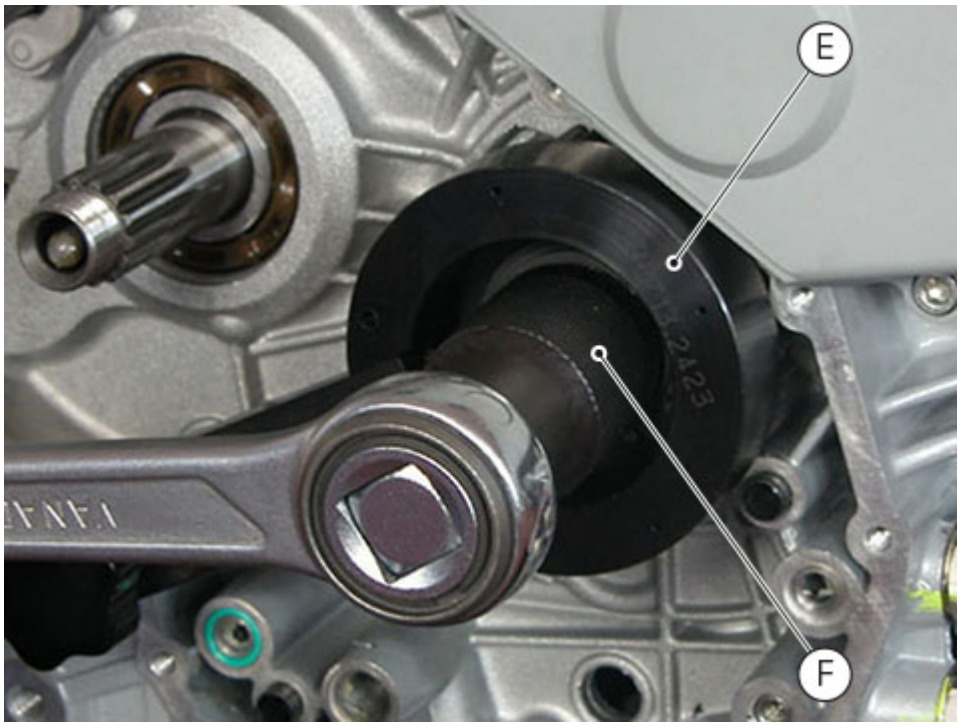

Position washer (4) and ring nut (3). Using the suitable tool (U), tighten ring nut (3) to a torque of 190 Nm (Min. 171 Nm - Max. 209 Nm).

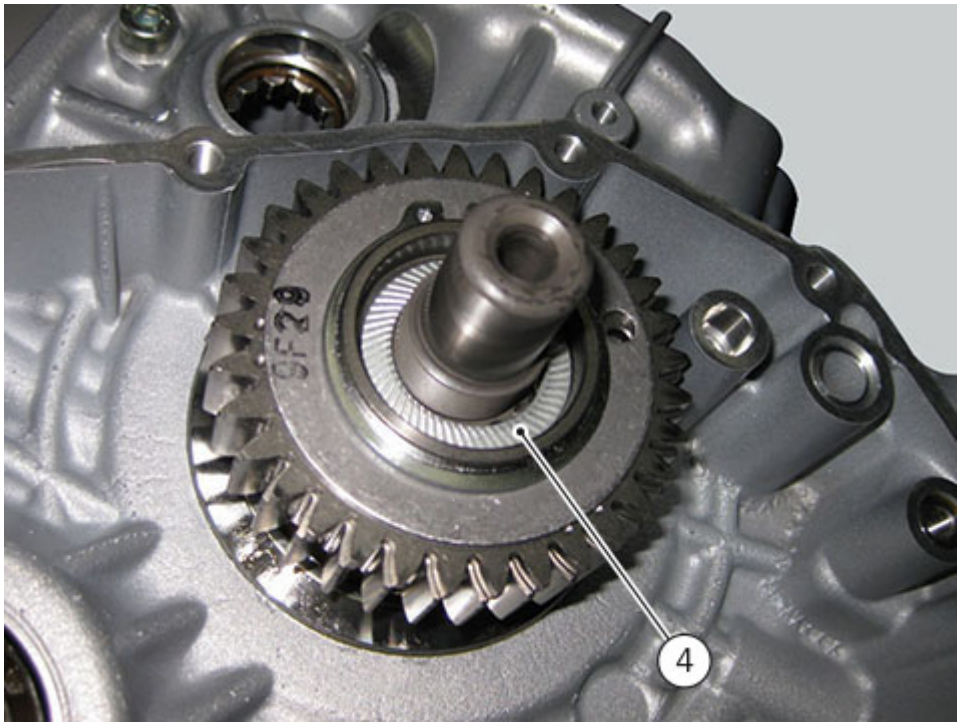

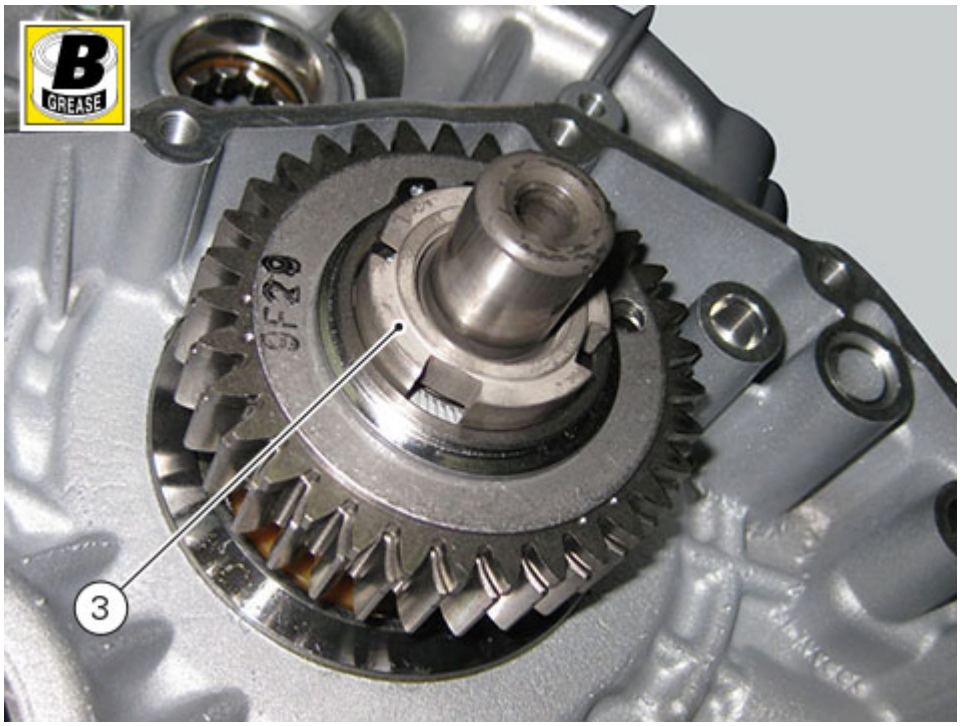

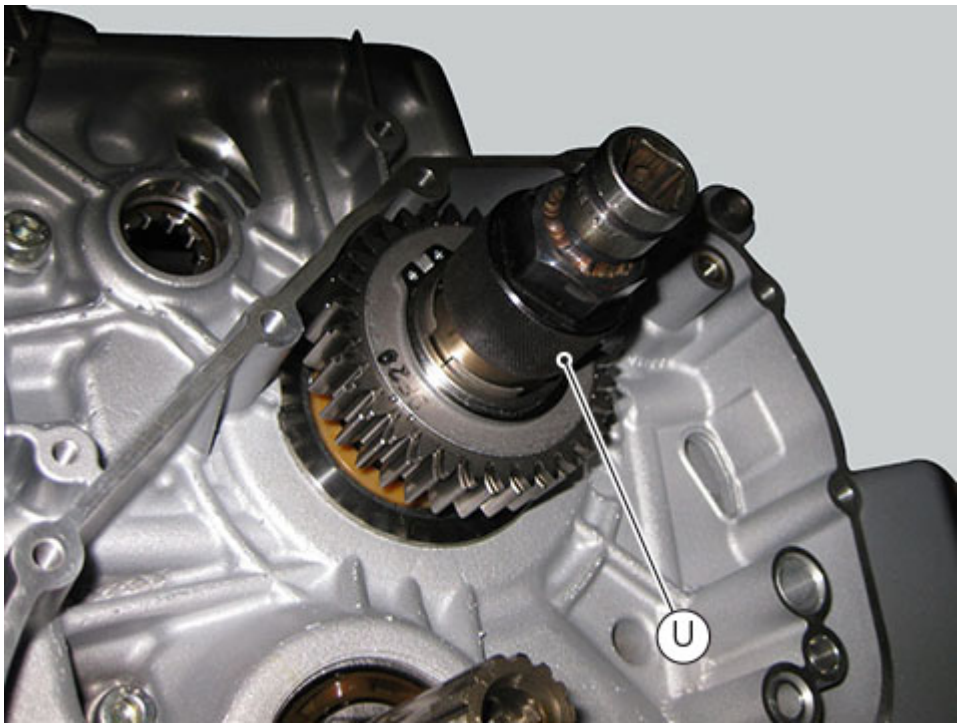

Refit the oil pump (C) and check the backlash between the oil pump gear and primary drive gear on the crankshaft (Refitting the oil pump).
Thoroughly degrease the mating surfaces of the clutch housing (1).
Fit the spacer (2) onto the primary shaft.
Fit the clutch housing (1) along with the driven gear (A).

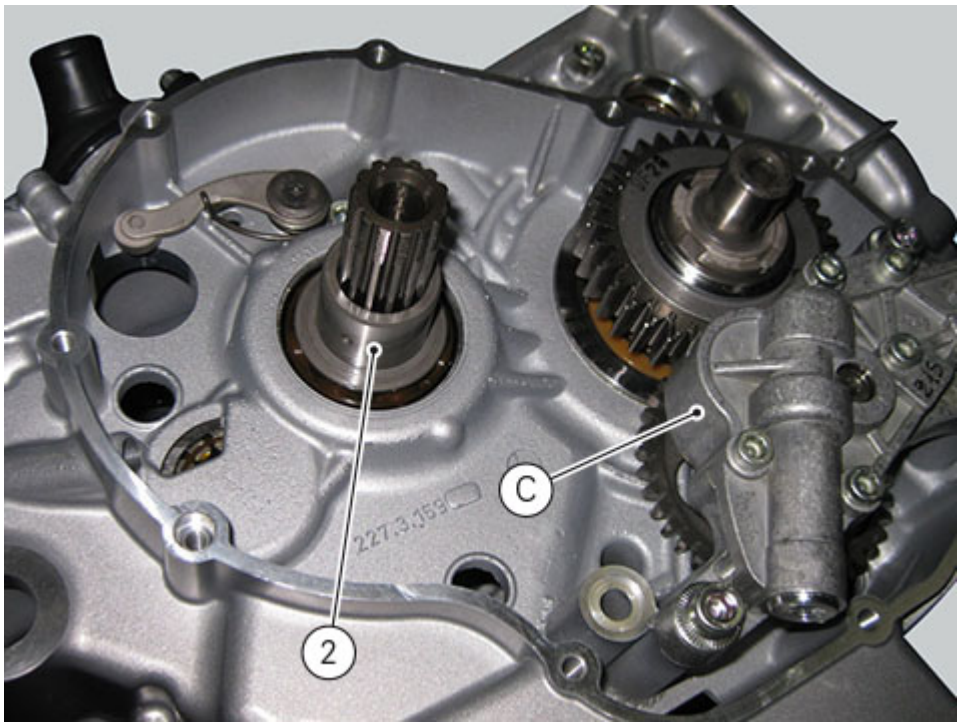

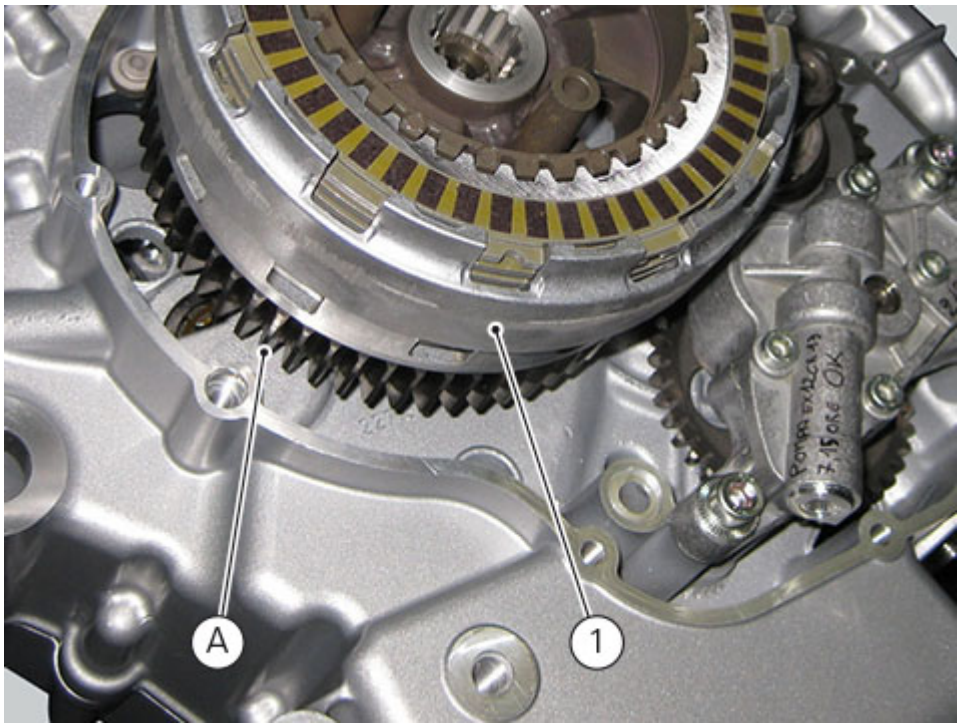

Refit the clutch unit (Refitting the clutch).
Refit the clutch cover (Refitting the clutch cover).
Fill the engine with oil (Changing the engine oil and filter cartridge).

Removing the primary drive gears

Drain the engine oil (Changing the engine oil and filter cartridge).
Remove the clutch cover (Removing the clutch cover).
Remove the clutch unit (Removing the clutch).

Withdraw the clutch housing (1) complete with driven gear of the primary drive gear (A).

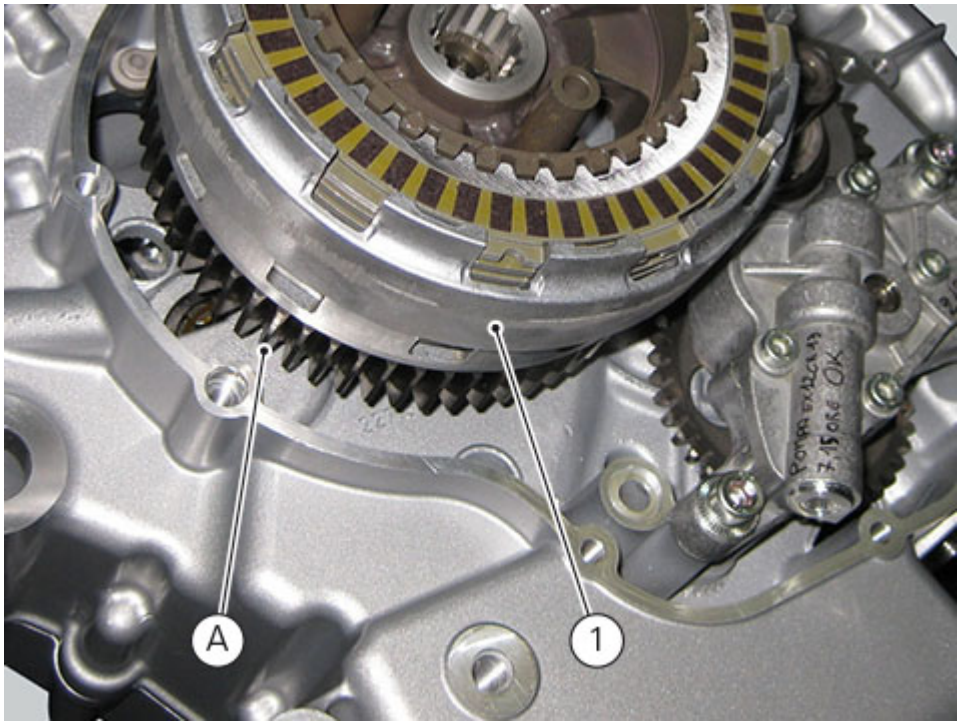

Remove the inner spacer (2).
Remove the oil pump (C) (Removing the oil pump).

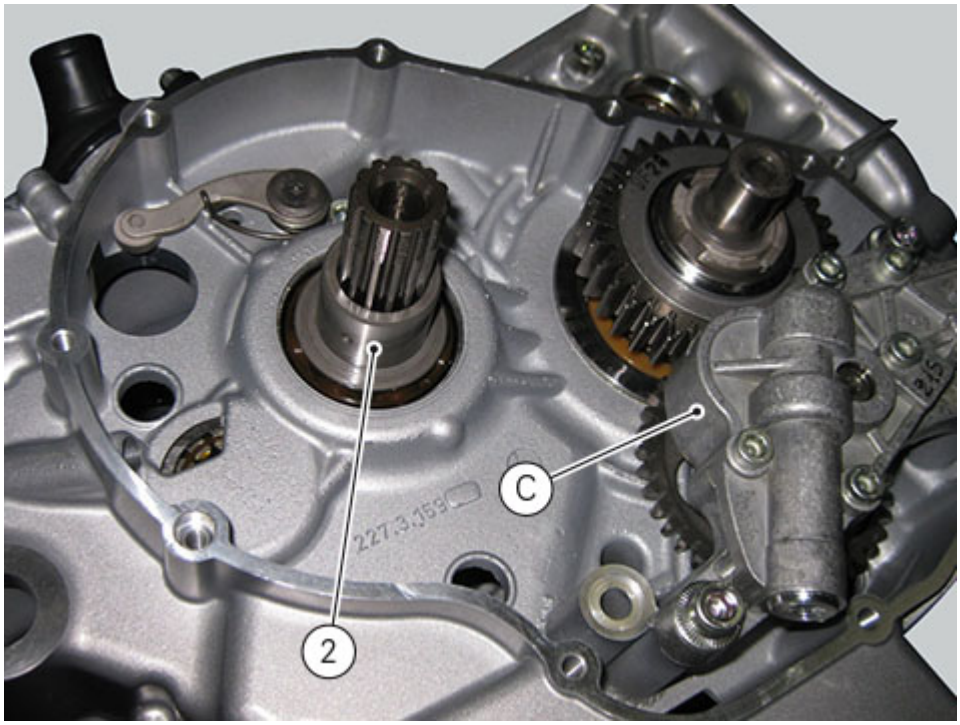

Lock the primary sprocket (B) with holding tool (E) part no. **88713.3417** and loosen the threaded ring nut (3) that locks the sprocket, using bush (F) part no. **88713.3406**.

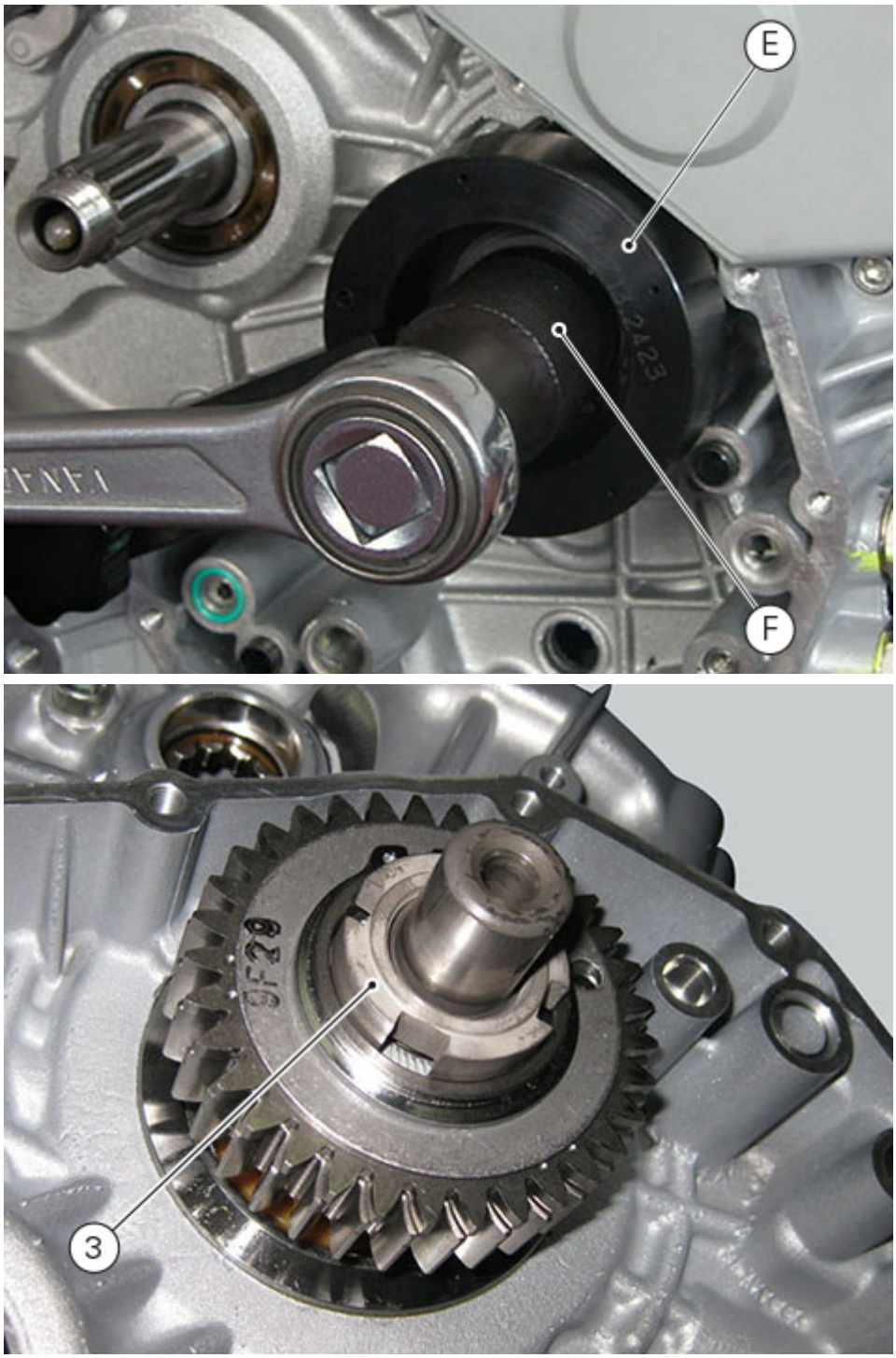

Remove the ring nut (3) and the lock washer (4).

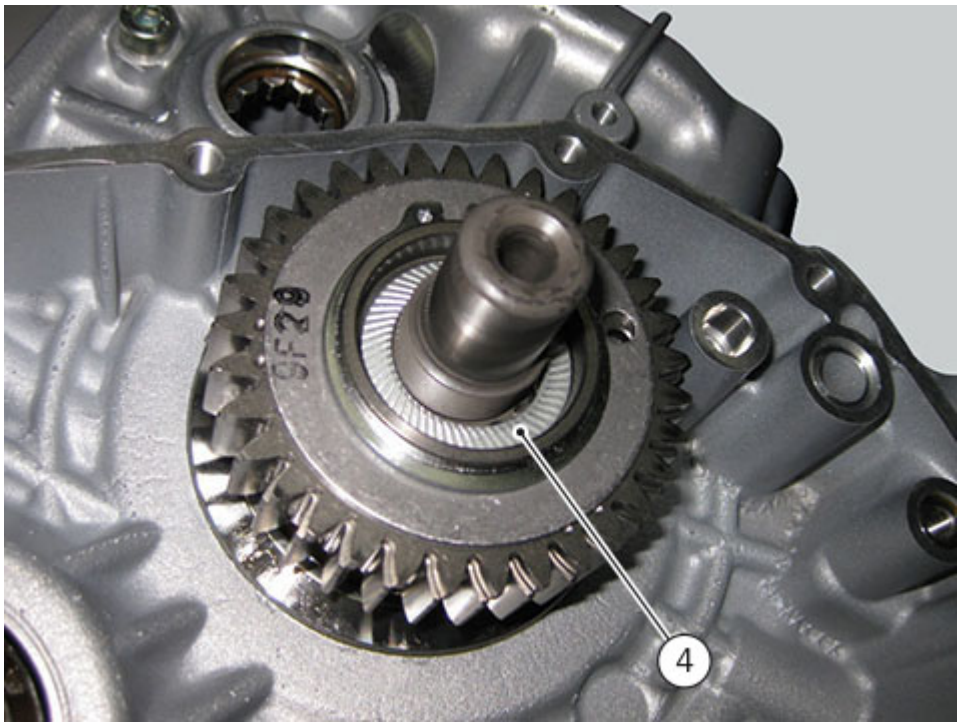

Remove the complete primary drive driving gear (B) using a commercial puller and placing a brass or aluminium pad between crankshaft and puller screw.

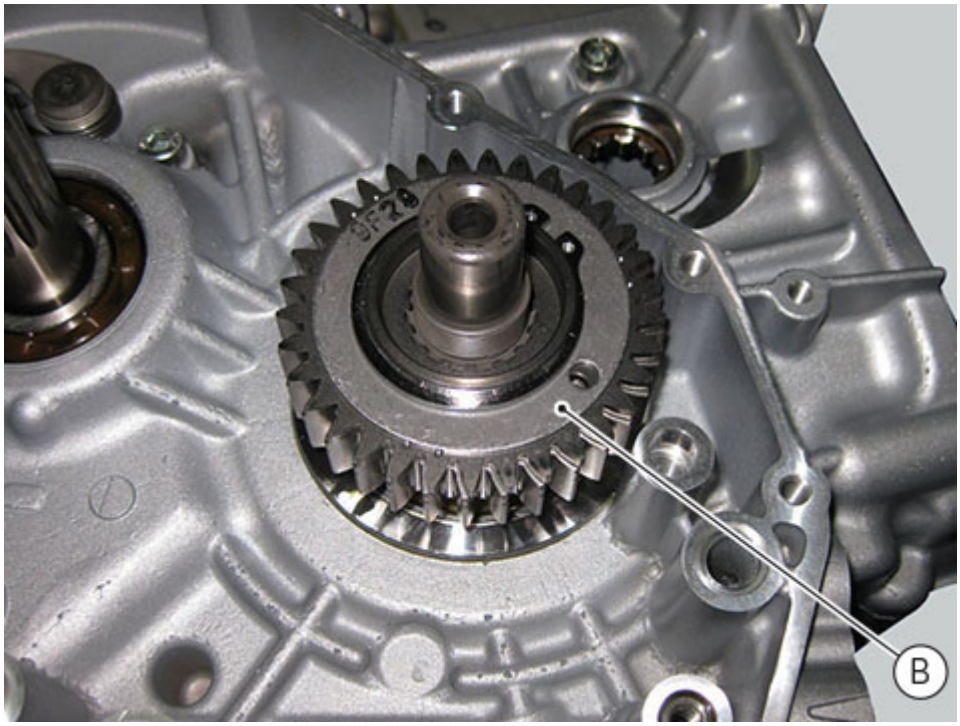

Remove spacer (D).

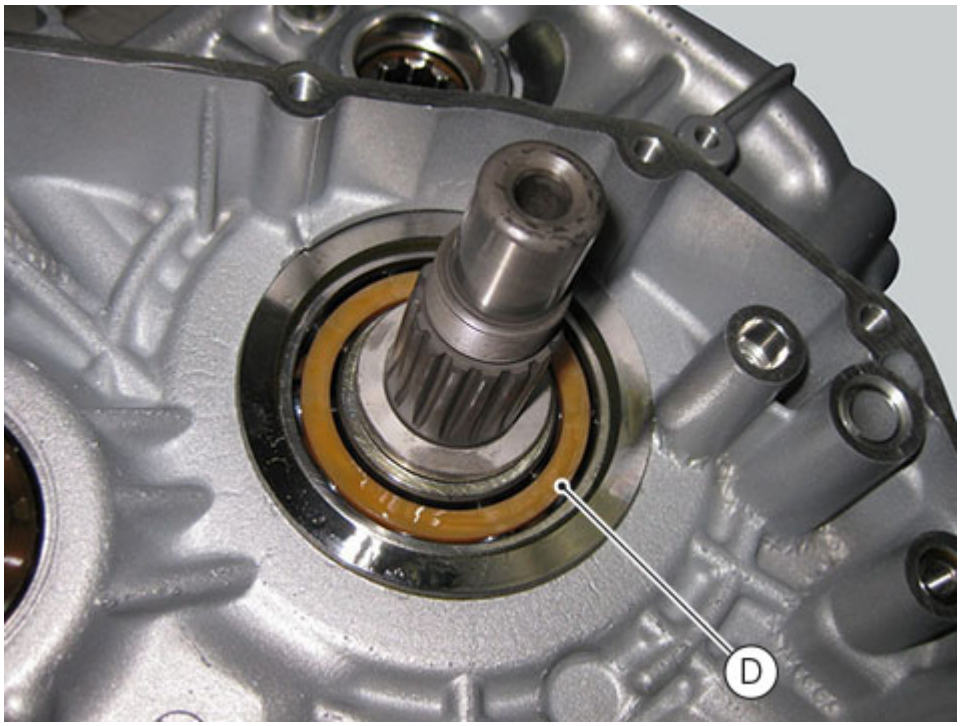
D

Refitting the gearchange mechanism

Position the gearbox drum selector fork in the centre of the gear rollers.
Position the gearchange mechanism (3) together with control shaft, spring and plate into the chain-side crankcase half.

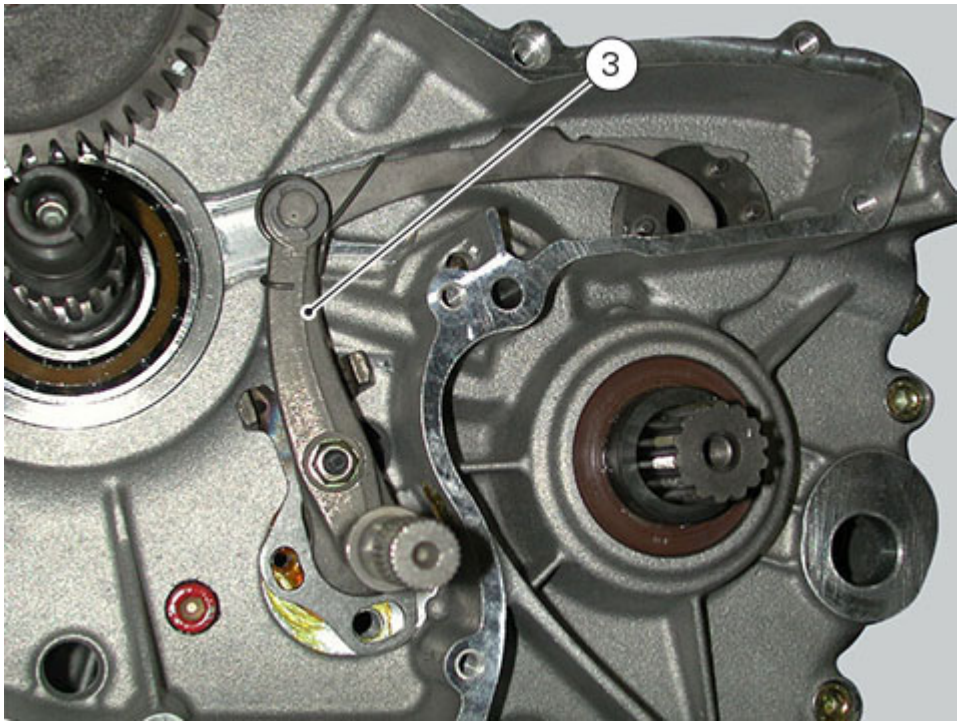

Insert the screws (1) and (2) with the spacer (4).
Temporarily fit gearchange lever (or a service lever) and engine sprocket and shift to neutral gear.

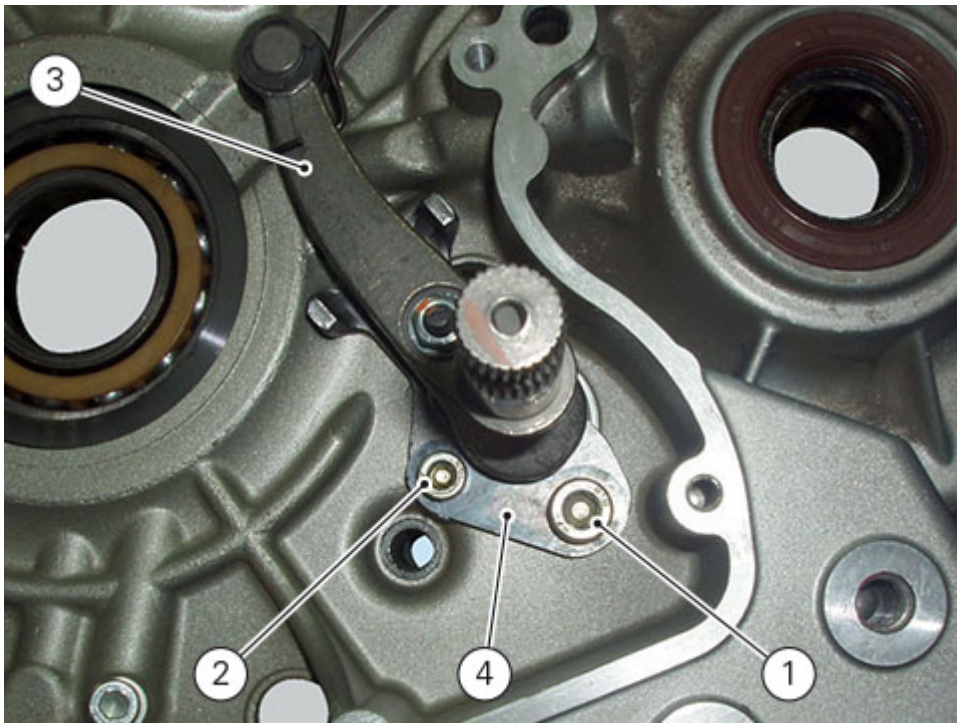

Set tool (A) part no. **88713.3334** on the gearbox pawl.



Place tool (A) part no. **88713.3334** inserting the clutch rod (E) into the tool hole, block the pin (F) of the tool in the gear pawl pressing with the hand in the point (G) (pawl stroke stop plate) towards the right, as shown in photo.

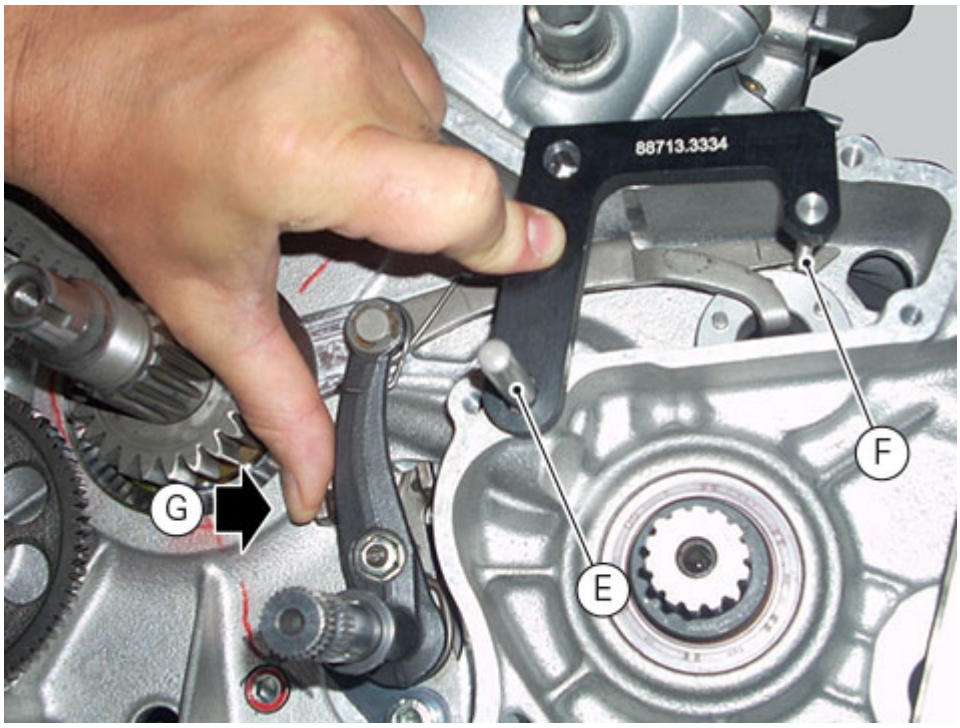

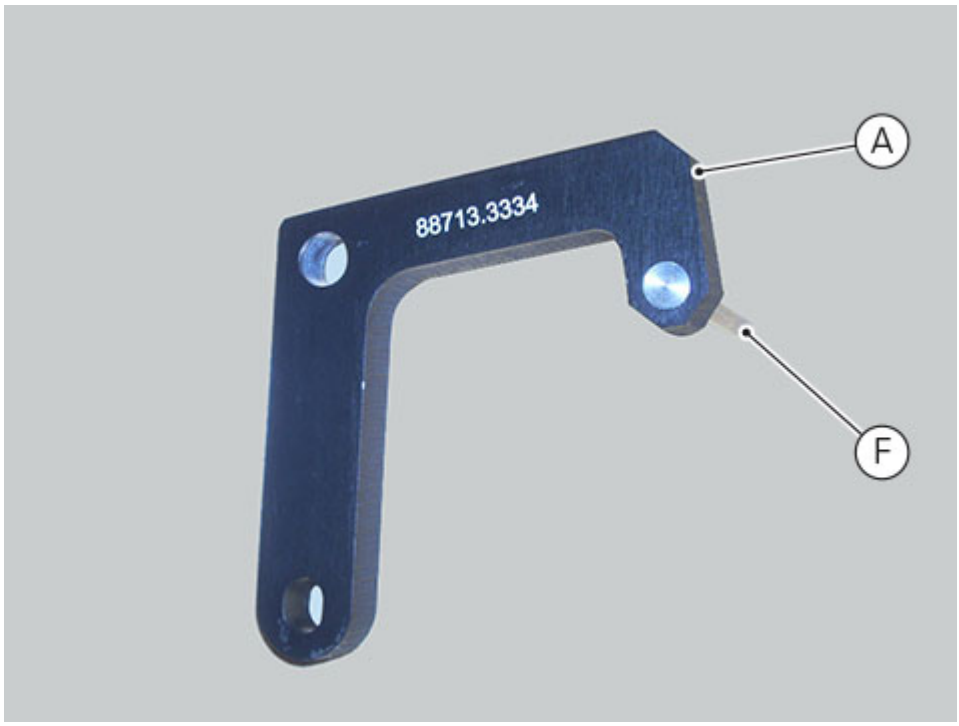

In this position tighten the screw (1) to a torque of 36 Nm (Min. 34 Nm - Max. 38 Nm) and the screw (2) to a torque of 16 Nm (Min. 15 Nm - Max. 17 Nm).

Warning

Make sure that the gearchange mechanism fixing screws are those indicated in our spare part catalogues. They must be screws of class 12.9 in order to respect the tightening torque indicated above.

Start tightening the first screw (1), and continue with screw (2).



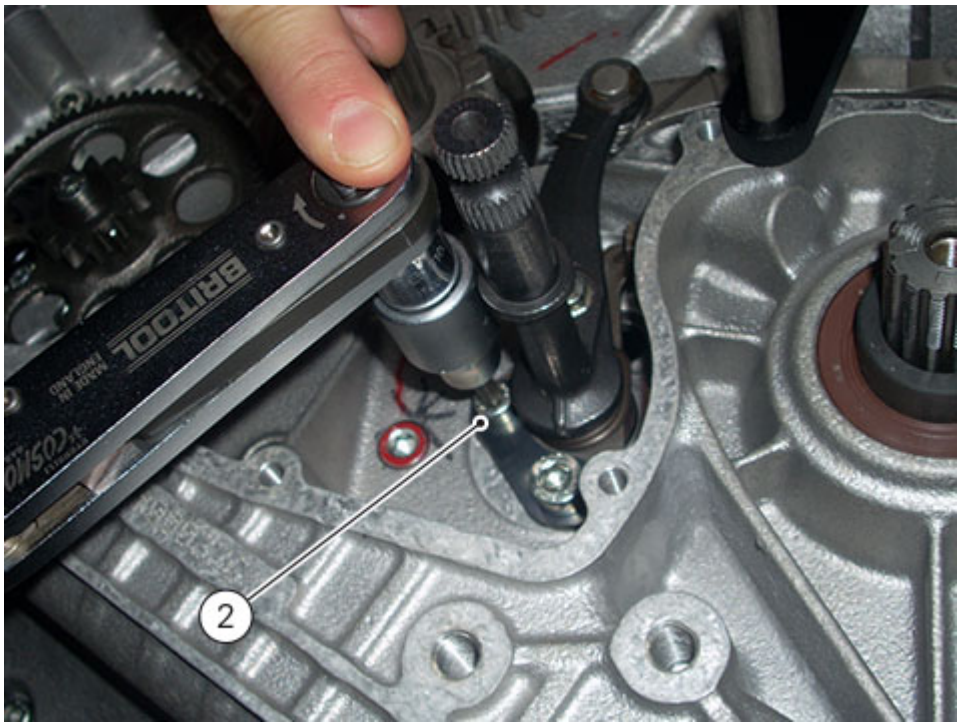

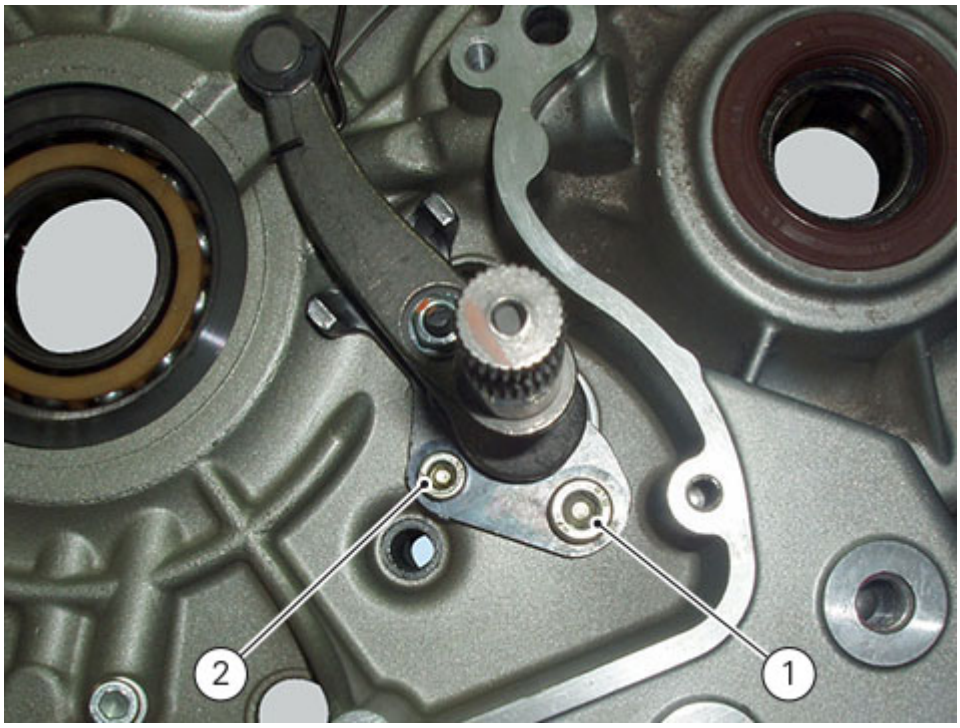

Remove service tool.
Check that the pin (H) placed on the gearbox selector drum is aligned with the notch (L) on the gear pawl (with gear in neutral).

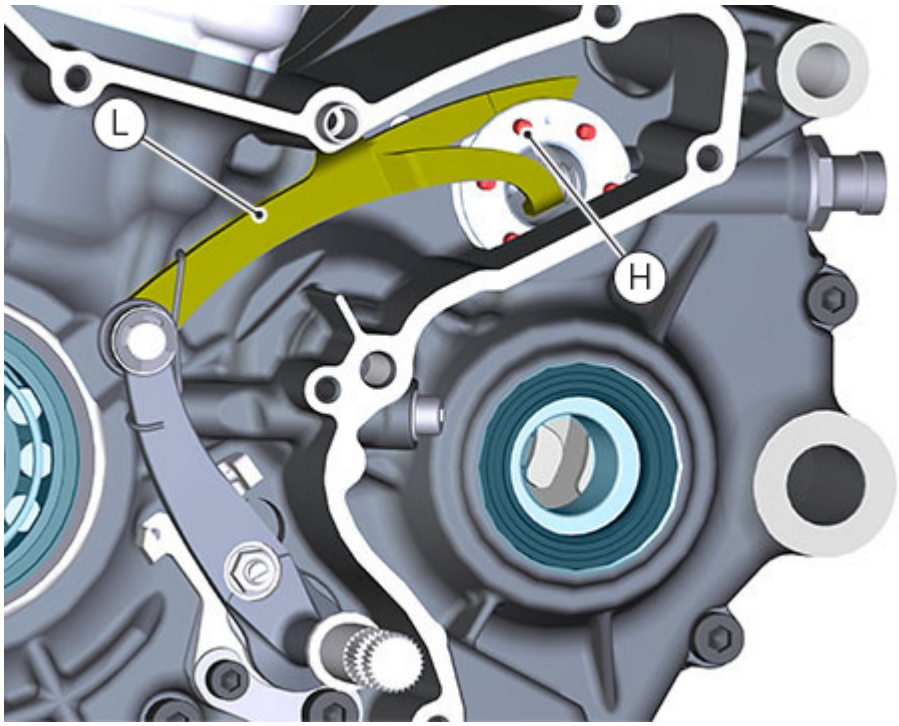

With the gearbox in neutral, check that the lever travel is the same when shifting up and down. The same should apply when a gear is engaged.
Operate the gearchange lever and turn the front sprocket at the same time to check that all the gears engage when shifting up and down.
Remove the previously installed lever and sprocket.

Refit the flywheel/generator assembly and the generator cover (Refitting the flywheel/generator assembly).
Refit the pump-water radiator hose (Refitting cooling system hoses and unions).
Refit the pump-cylinder hoses (Refitting the cylinder/piston assembly).
Refill the cooling system (Changing the coolant).
Refit the clutch slave cylinder (Refitting the clutch slave cylinder).
Refit the front sprocket cover (Refitting the front sprocket cover).
Fill the system with engine oil (Changing the engine oil and filter cartridge).

Refitting the gear interlock plunger and ratchet

On the special screw (5), fit the gear ratchet (6), orienting it as shown in the figure, the washer (7) with the square edge side (D) facing the clutch-side crankcase half, and the spring (8), positioning it so that the hook end (A) is facing the gear ratchet.
Locate the hook (A) of the spring on the gear ratchet as shown in the figure.
Apply threadlocker to the screw thread.
Start the screw in the crankcase half.
Position end (B) of the spring so that it rests against rib (C) of the crankcase half, as shown in the figure.
Tighten screw (5) to a torque of 18 Nm (Min. 16 Nm - Max. 20 Nm).
Manually move the gear ratchet to check for proper spring operation.

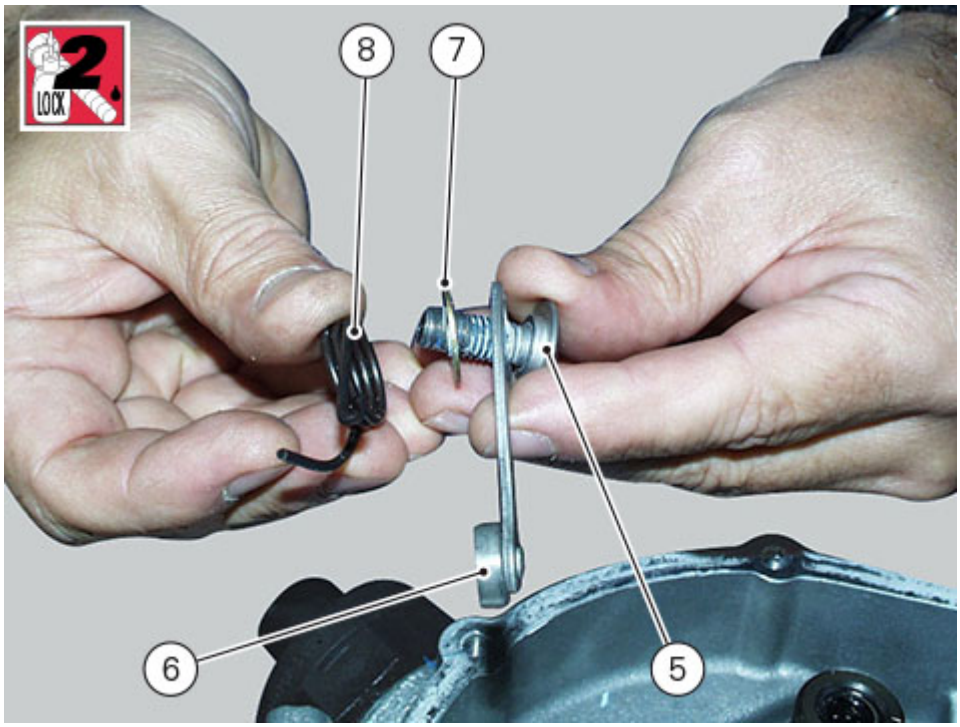

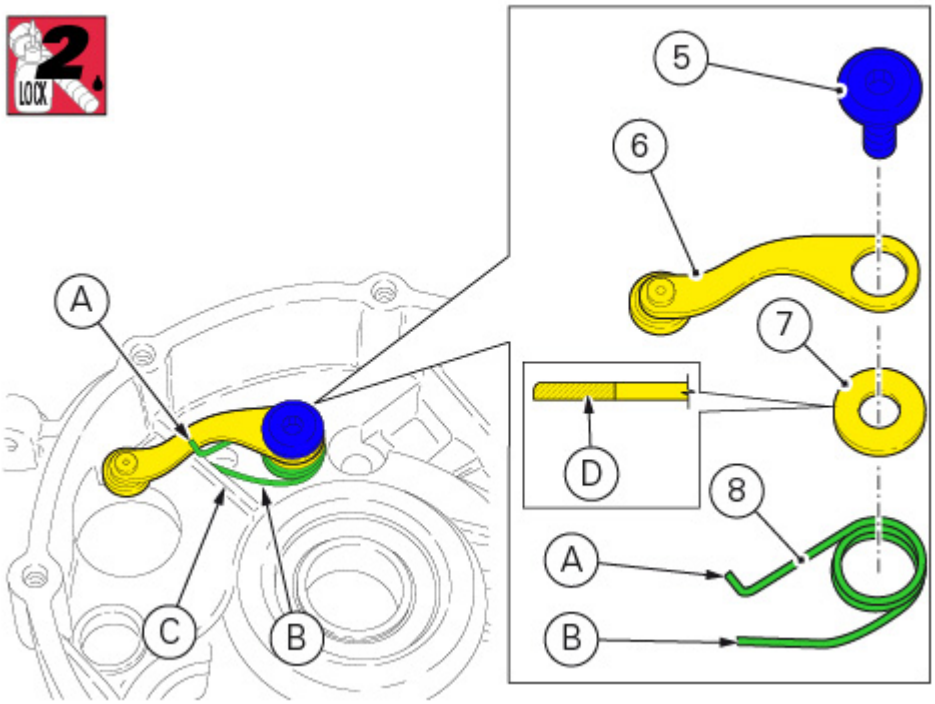

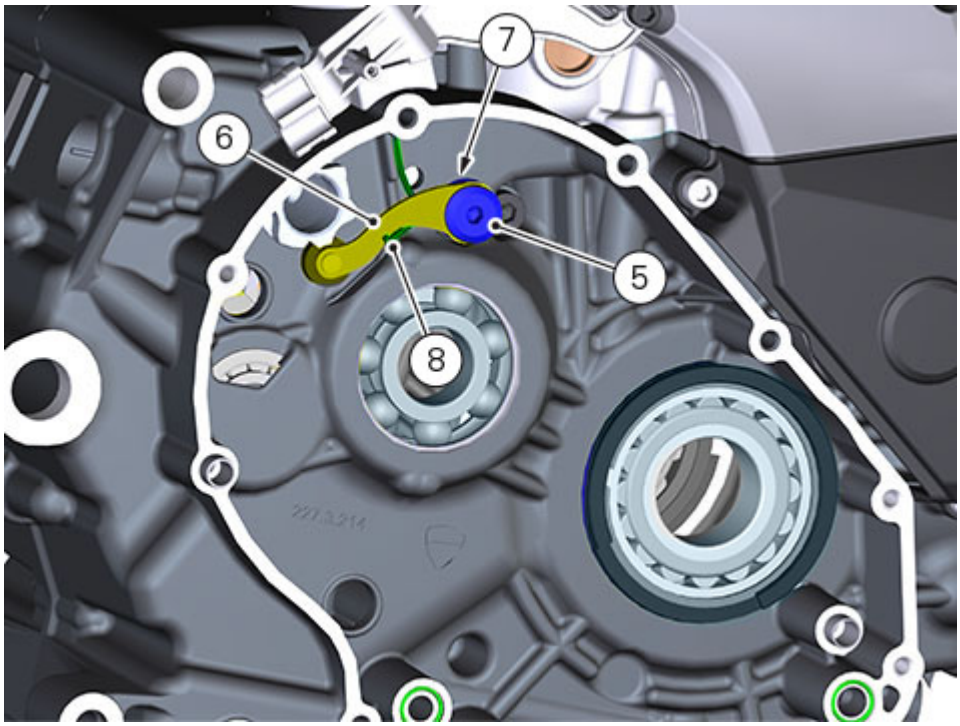

Grease and then fit the ball (4), spring (3), and seal (2) to the gear interlock plunger (1).
Tighten the gear interlock plunger to a torque of 30 Nm (Min. 27 Nm - Max. 33 Nm).

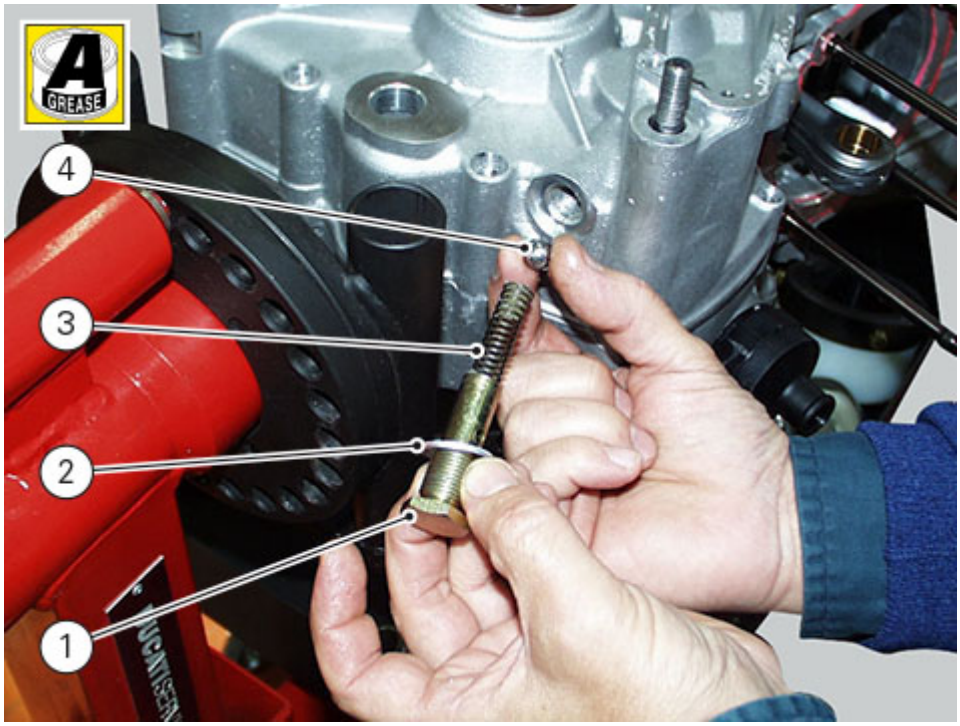

Refit the primary drive gear (Refitting the primary drive gear and checking backlash).
Refit the clutch unit (Refitting the clutch).
Refit the clutch cover (Refitting the clutch cover).
Fill the system with engine oil (Changing the engine oil and filter cartridge).

Disassembling gear interlock plunger and ratchet

Drain the engine oil (Changing the engine oil and filter cartridge).
Remove the clutch cover (Removing the clutch cover).
Remove the clutch unit (Removing the clutch).
Remove the primary drive gear (Removing the primary drive gear).

Undo the interlock plunger screw (1) and remove the seal (2), the spring (3) and the ball (4).

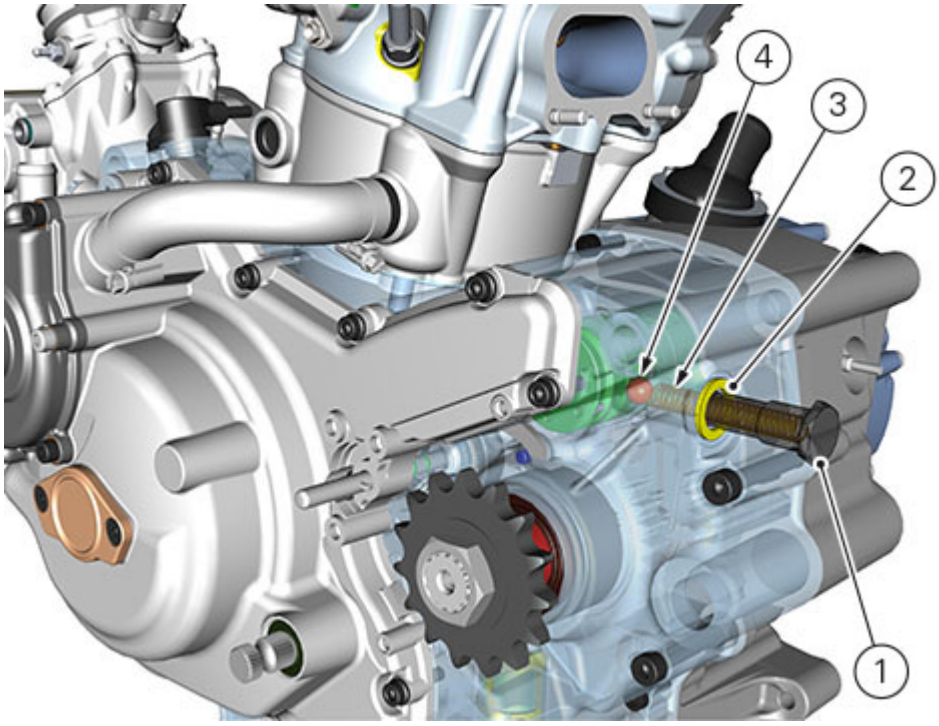

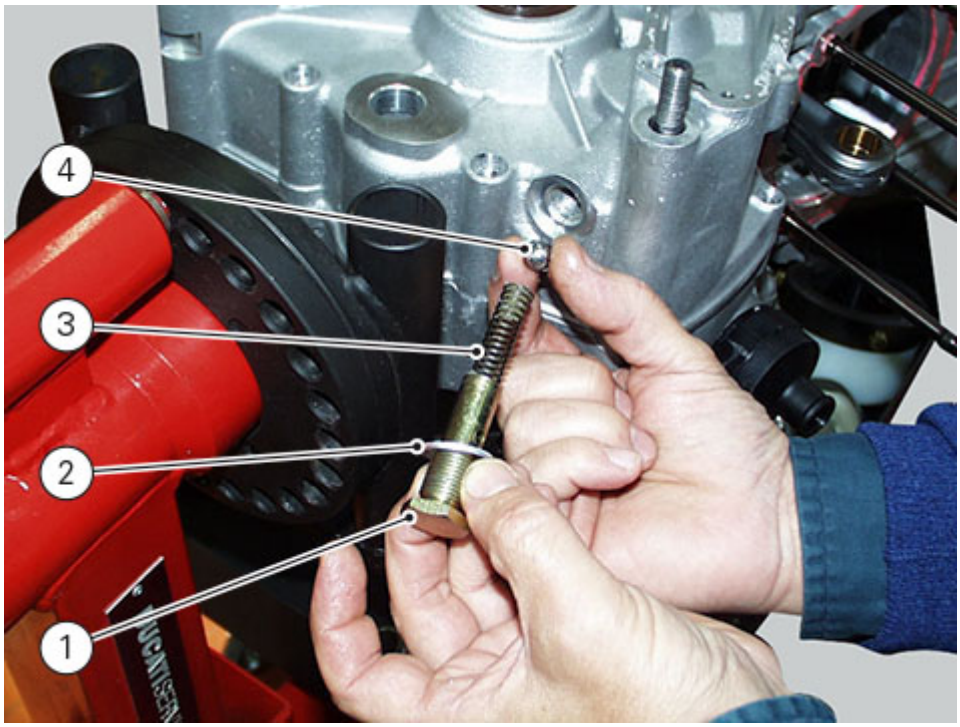

Undo the clutch-side crankcase half screw (5) and remove the ratchet (6), the washer (7) and the spring (8).

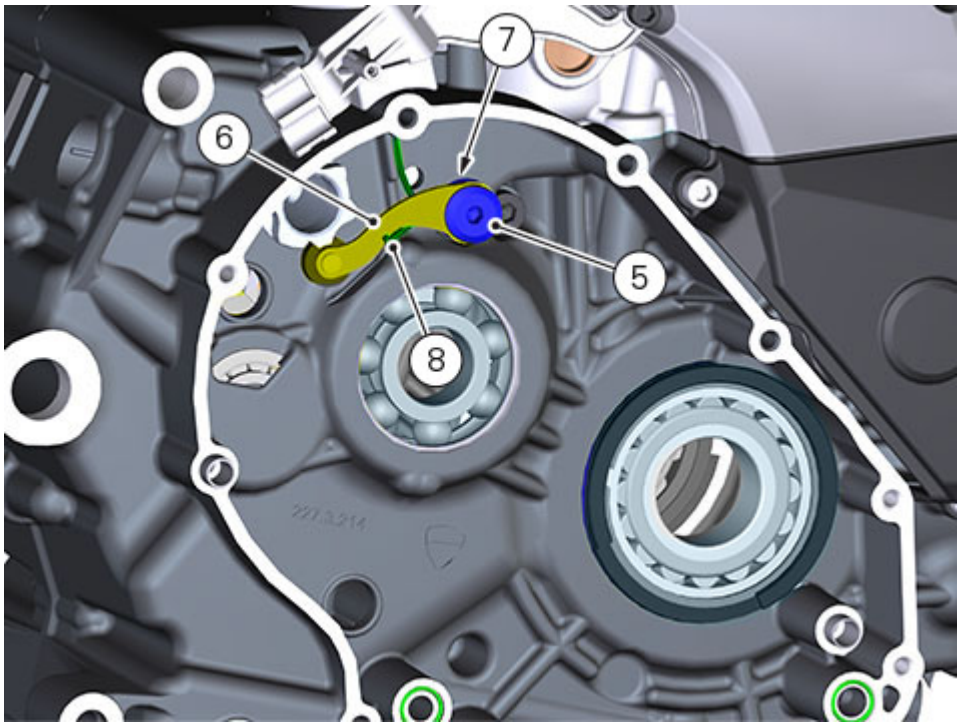
7
6
5
8

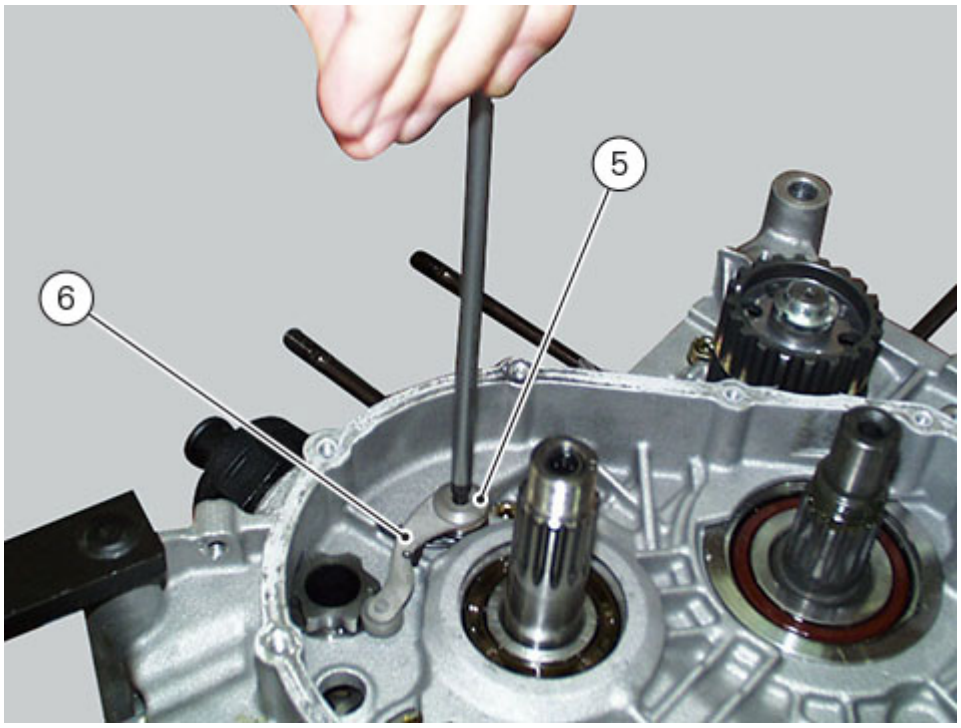
5
6

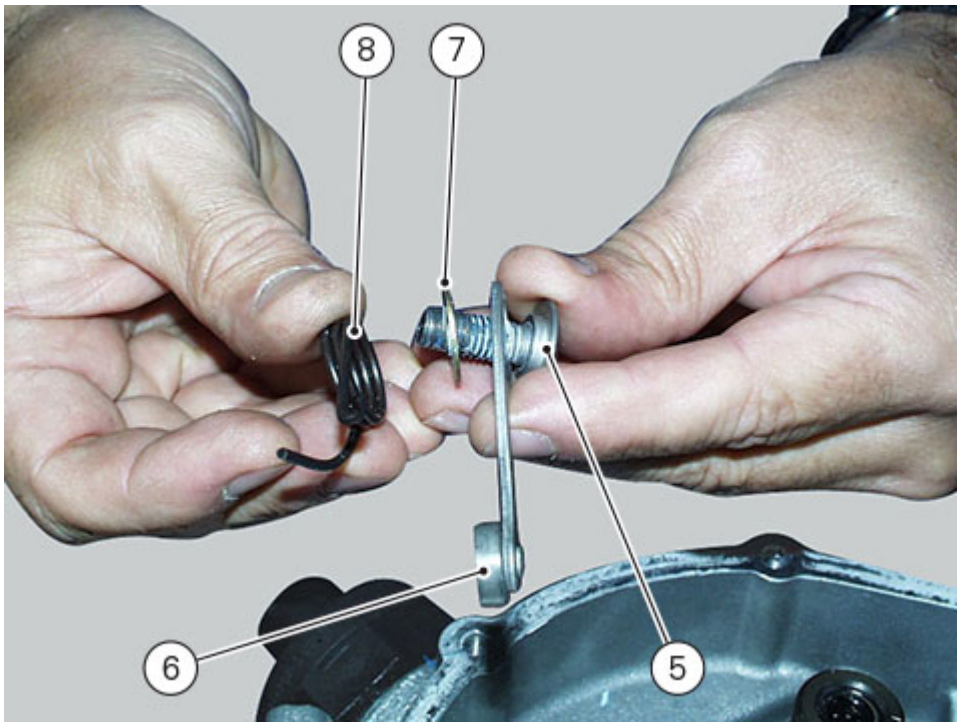
8
7
6
5

Removing the gearchange mechanism

Drain the engine oil (Changing the engine oil and filter cartridge).
Remove the front sprocket cover (Removing the front sprocket cover).
Remove the clutch slave cylinder (Removing the clutch slave cylinder).
Drain the coolant (Changing the coolant).
Remove the pump-cylinder hoses (Removing the cylinder/piston assembly).
Remove the pump-water radiator hose (Removing cooling system hoses and unions).
Remove the generator cover and flywheel-generator assembly (Removing generator cover).

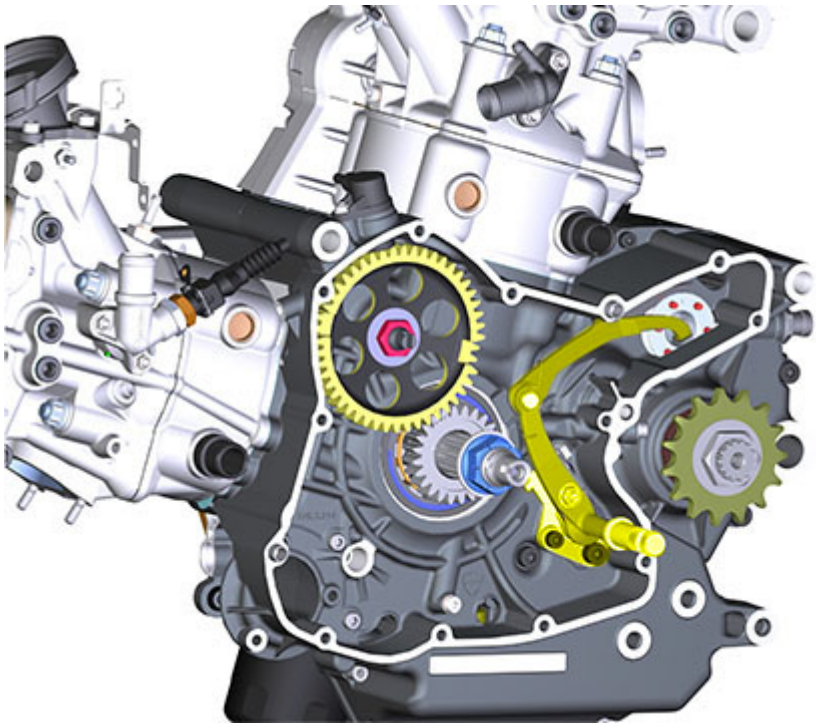

Undo and remove the fixing screws (1) and (2) of the complete gearchange mechanism and collect the spacer (4).
Remove the gearchange mechanism complete with the shaft, spring, and plate.

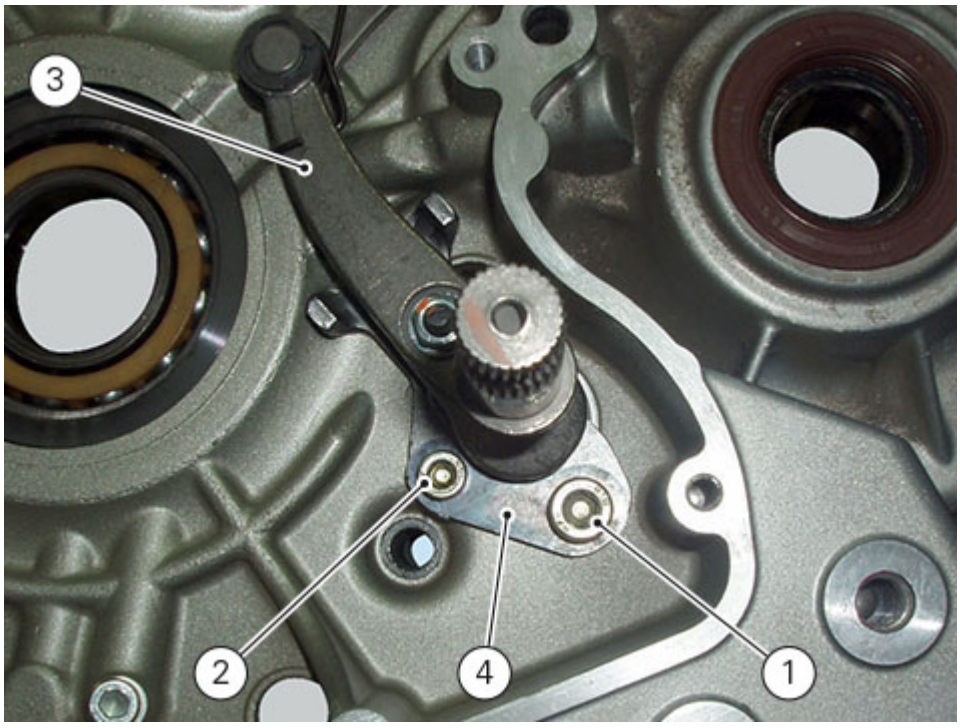

Visually inspect the gear selector fork (5) for wear, particularly around the area where it contacts the selector drum.

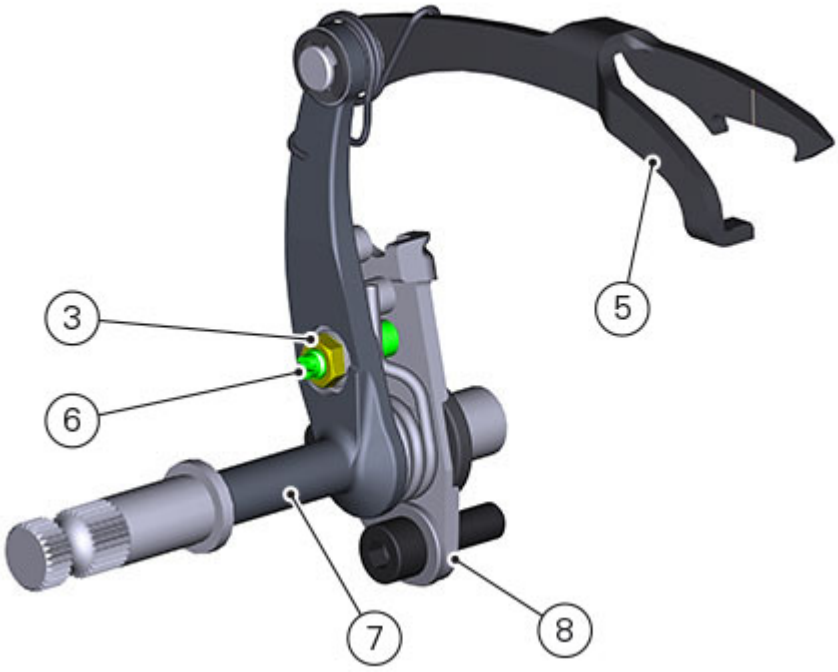

If it proves necessary to change components, disassemble the gearchange mechanism as shown in the exploded view. Reassemble the gearchange mechanism orienting the eccentric pin (6), suitably lubricated, in such a way that the lever (7) is positioned centrally with respect to the shoulders of the stop plate (8).

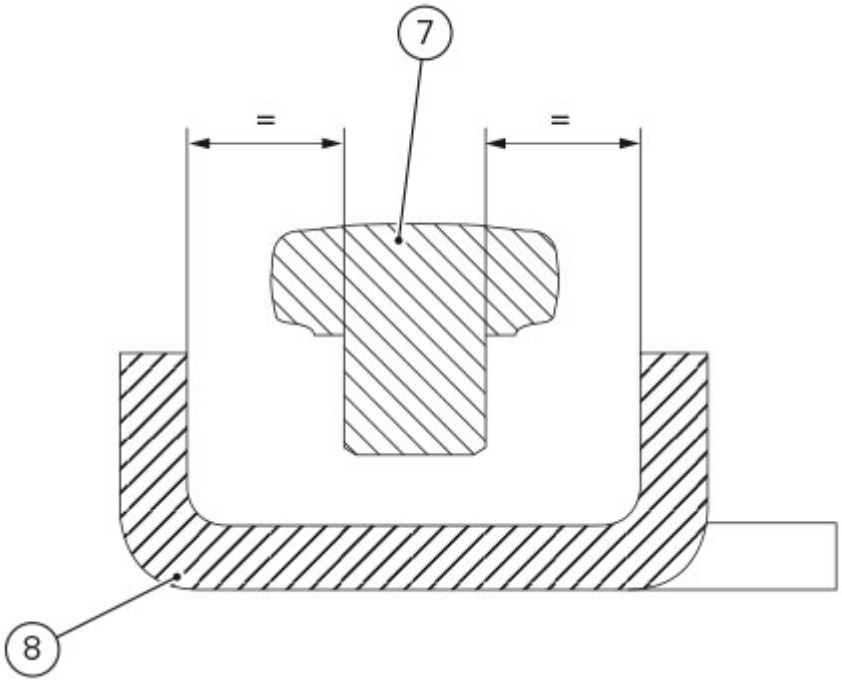

Check that the spring (9) is installed correctly as shown in the figure.

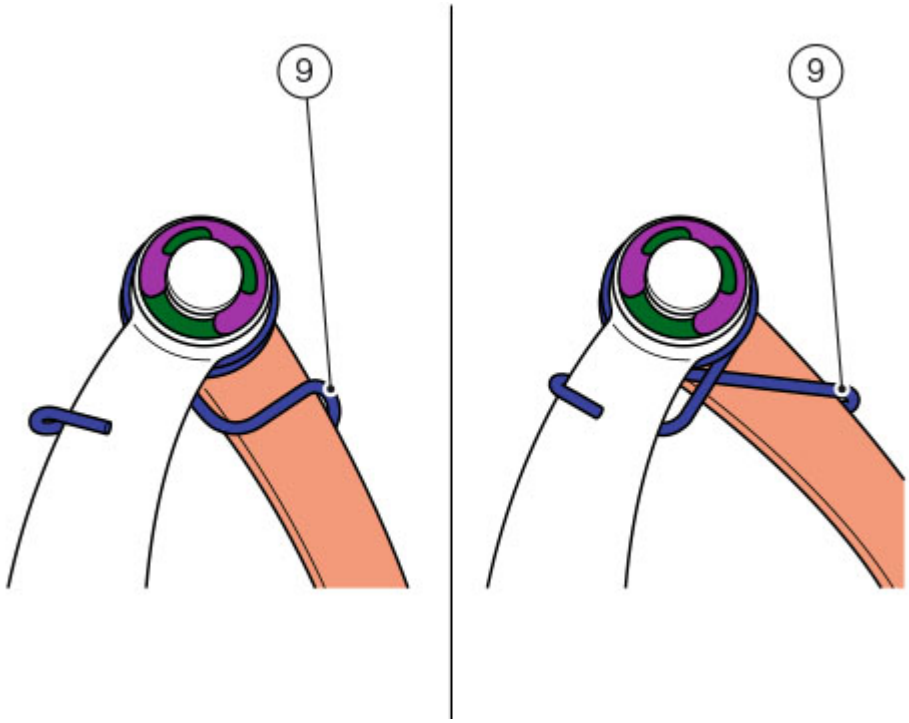

After having applied the recommended grease, tighten the nut (3) to a torque of 10 Nm (Min. 9 Nm - Max. 11 Nm).

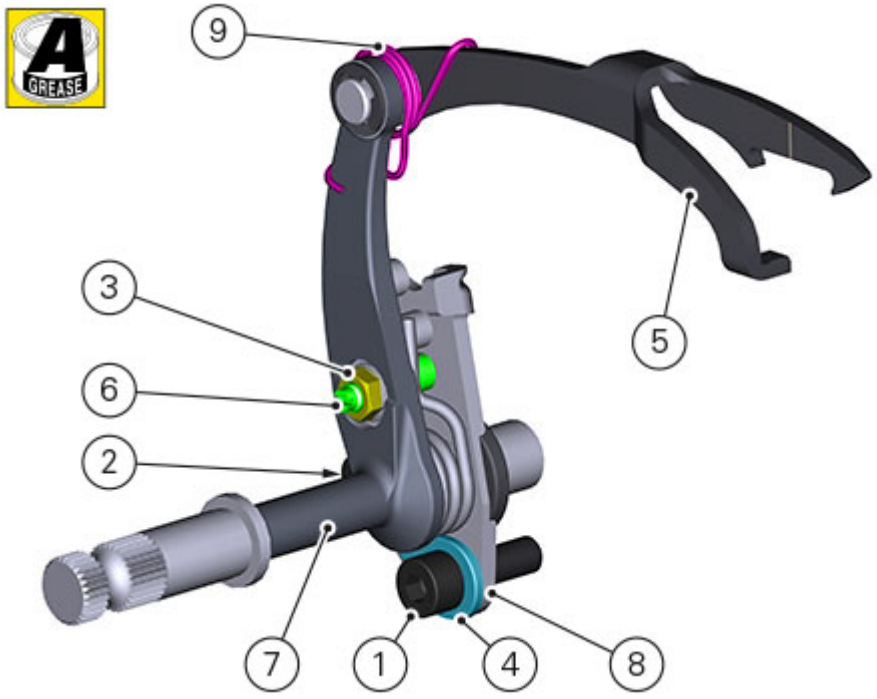

Reassembling the gearbox assembly

To refit the gearbox components follow the procedure under chapter "Closing the crankcase" relating to the reassembly of the crankcase.
As a final practical test, ensure that with the gearbox in neutral the front coupling dogs (A) of sliding gears (B) are equidistant on both sides with respect to the corresponding coupling dogs on the fixed gears (C).
Check also that there is always a small amount of clearance between fork (D) and relative groove (E) on sliding gear (B) when engaging the gears.

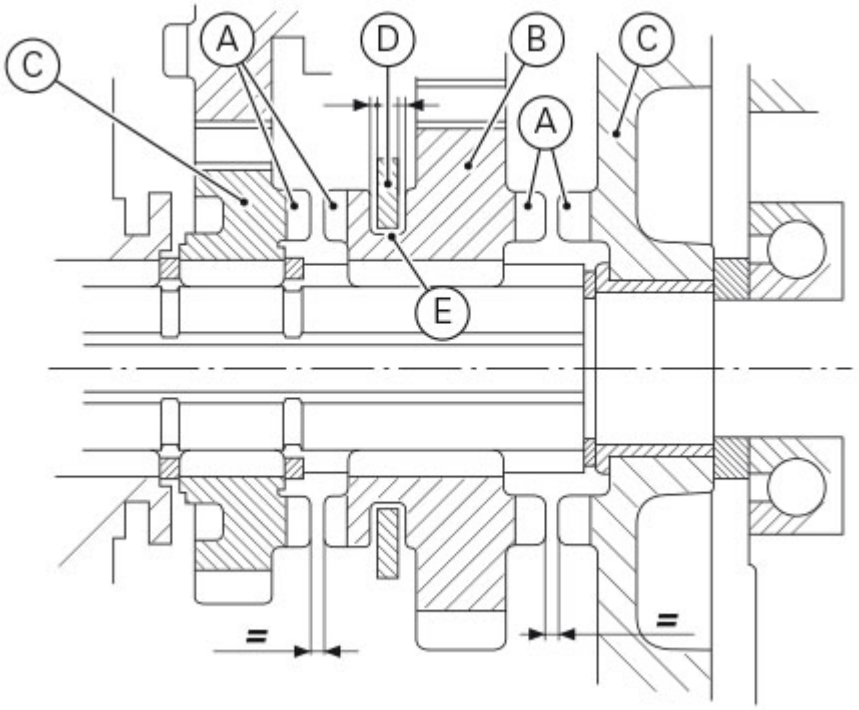

Close the crankcase halves (Closing the crankcase).
Refit the primary drive gear (Refitting the primary drive gear and checking backlash).
Refit the clutch cover (Refitting the clutch cover).
Refit the cover, the drum and the clutch housing (Refitting the clutch).
Refit the starter motor (Refitting the starter motor).
Refit the oil pump (Refitting the oil pump).
Refit the generator assembly and the generator side cover (Refitting the flywheel/generator assembly).
Refit the complete cylinder/piston assembly (Refitting the cylinder/piston assembly).
Refit the complete cylinder head assembly (Reassembling the cylinder head).
Refit the camshaft assembly (Refitting the camshafts).
Refit the timing system components (Refitting the cylinder head pulleys/fixed tensioners).
Fit the engine on the frame (Refitting the engine).

Reassembling the gearbox shafts

The figure shows all components that must be fitted on the primary shaft (23) with washer (17).

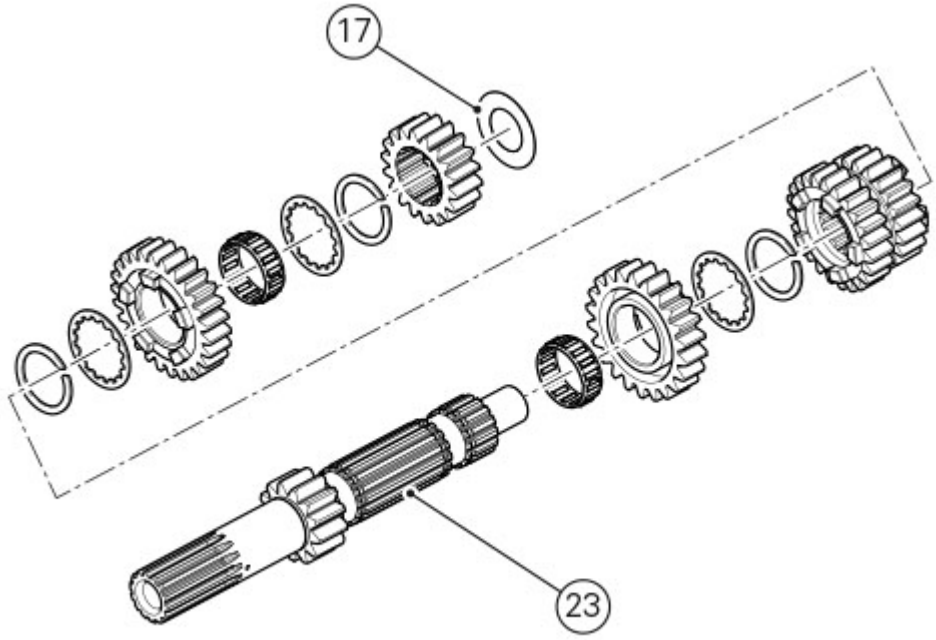

The figure shows all components to be fitted on the secondary shaft (16) with washer (2).

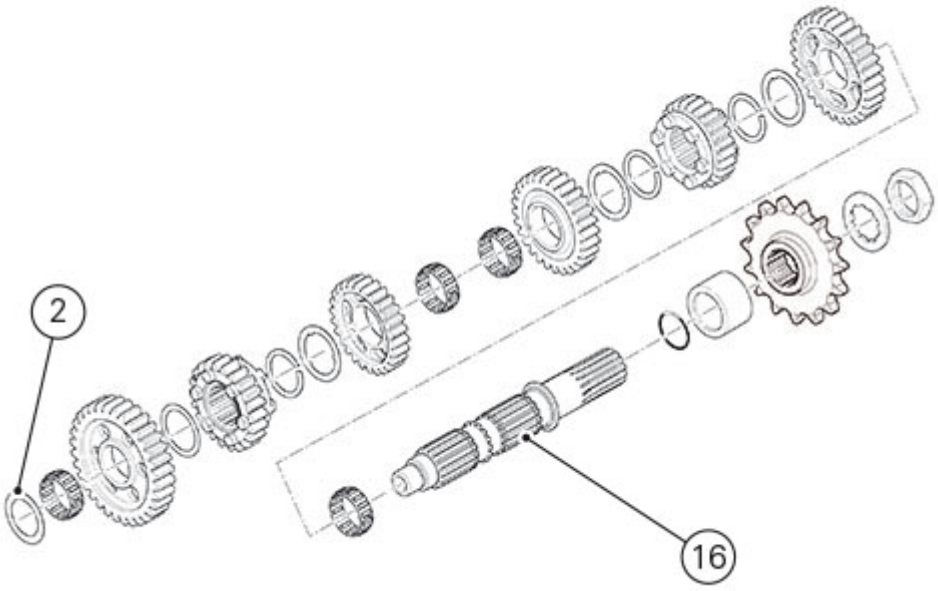

Reassembling the gearbox primary shaft

Fit roller bearing cage (10), fifth speed driving gear (22), splined washer (8) and snap ring (7) on the primary shaft (23).
Upon fitting the snap ring (7), check that it is fully inserted into its grooves on the shaft.
Push the snap ring into position with a suitable size tubular drift.

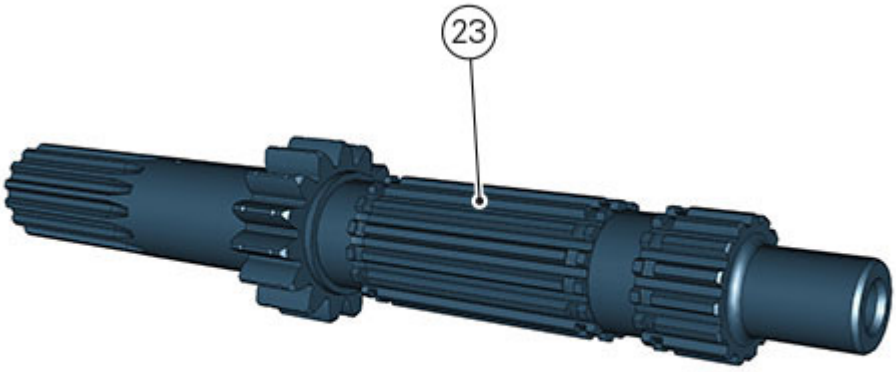

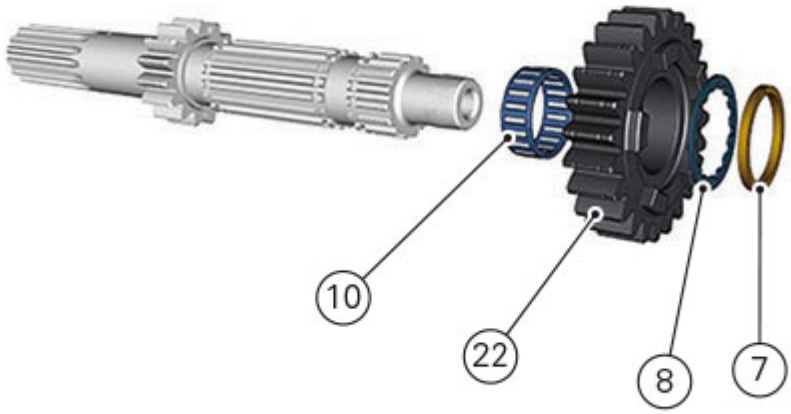

Engage the third and fourth speed driving gear (21).

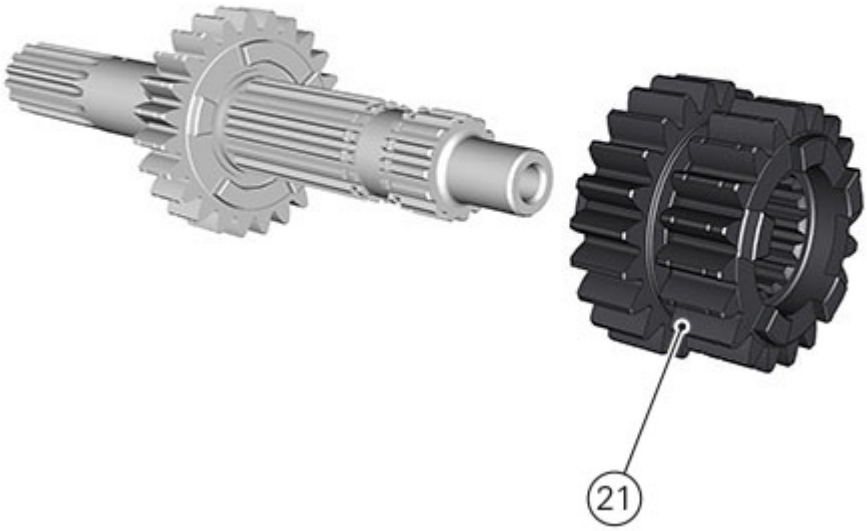

Fit snap ring (7), splined washer (8), roller bearing cage (10) and sixth speed driving gear (9) on the shaft.
Then fit the other splined washer (8) and the snap ring (7).
Upon fitting snap rings (7), check that they are fully inserted into their grooves on the shaft.
Push the snap rings into position with a suitable size tubular drift.

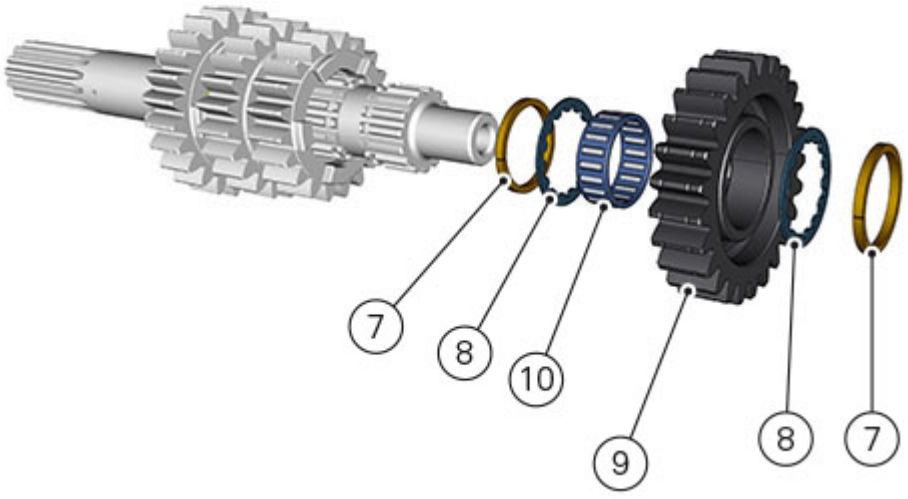

Engage the second speed driving gear (19).

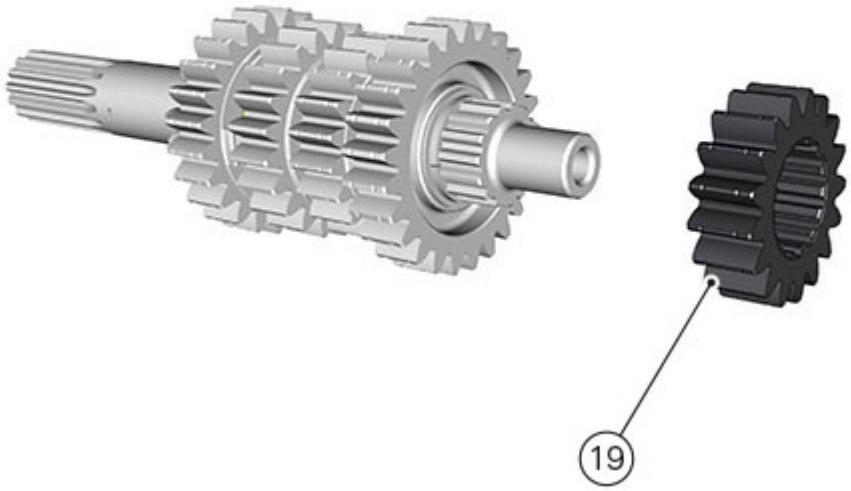

Refit the chain side washer (17) on the primary shaft (23).

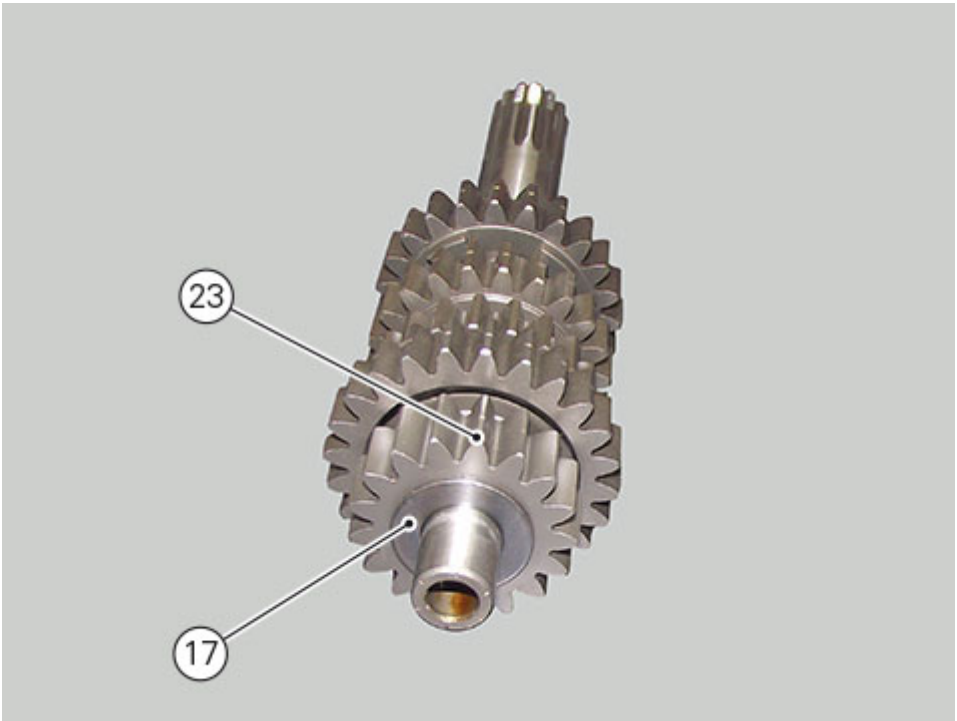

Reassembling the gearbox secondary shaft

Refit roller bearing cage (10), second speed driven gear (14), splined washer (8) and snap ring (7) on the secondary shaft (16).
Upon fitting the snap ring (7), check that it is fully inserted into its grooves on the shaft.
Push the snap ring into position with a suitable size tubular drift.

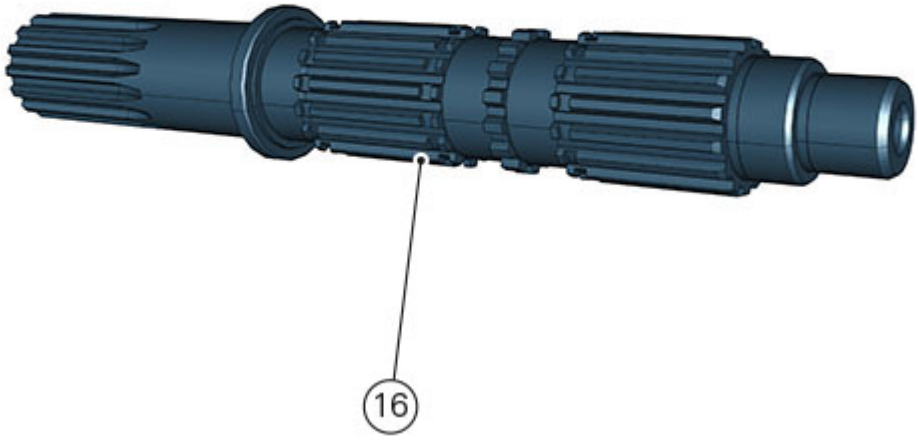

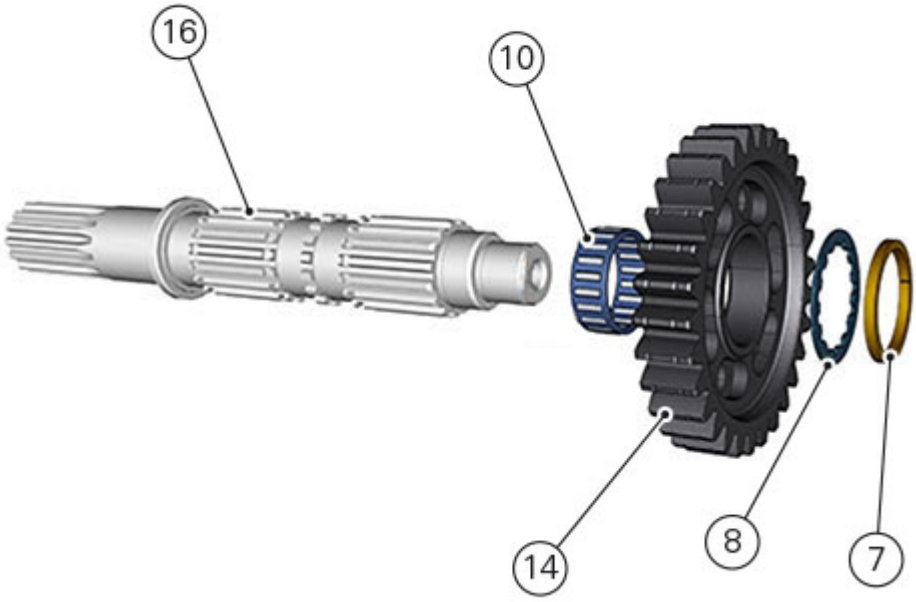

Engage the sixth speed driven gear (13). Fit snap ring (7), splined washer (8) and roller bearing cage (10).
Upon fitting the snap ring (7), check that it is fully inserted into its grooves on the shaft.
Push the snap ring into position with a suitable size tubular drift.

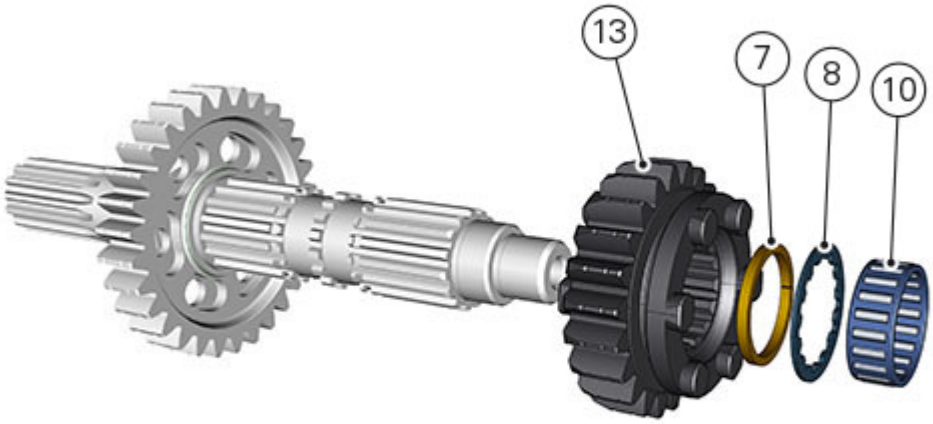

Fit the 3th speed gear (12).

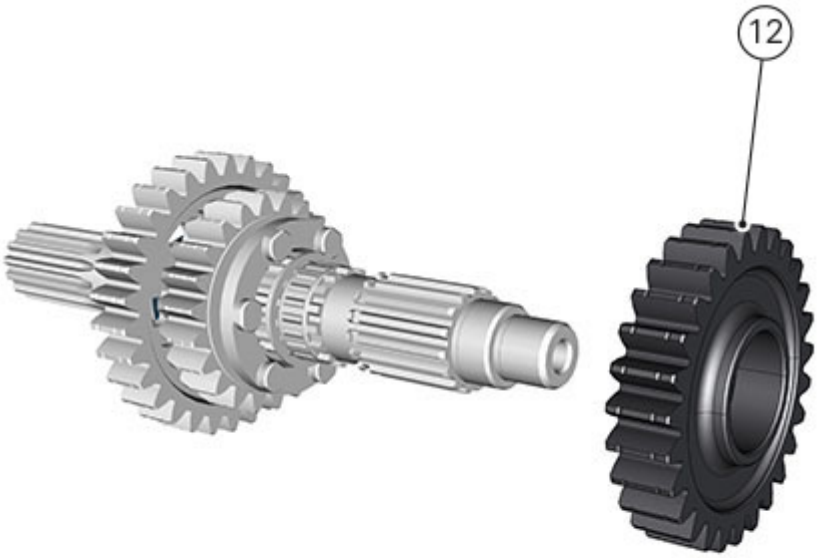

Install the roller bearing (10).
Fit the 4th speed gear (9).
Fit washer (8) and another snap ring (7) in the shaft.
When installing snap ring (7) make sure it is completely inside the shaft grooves. It is a good rule to use a tubular drift with suitable dimensions to push the ring.

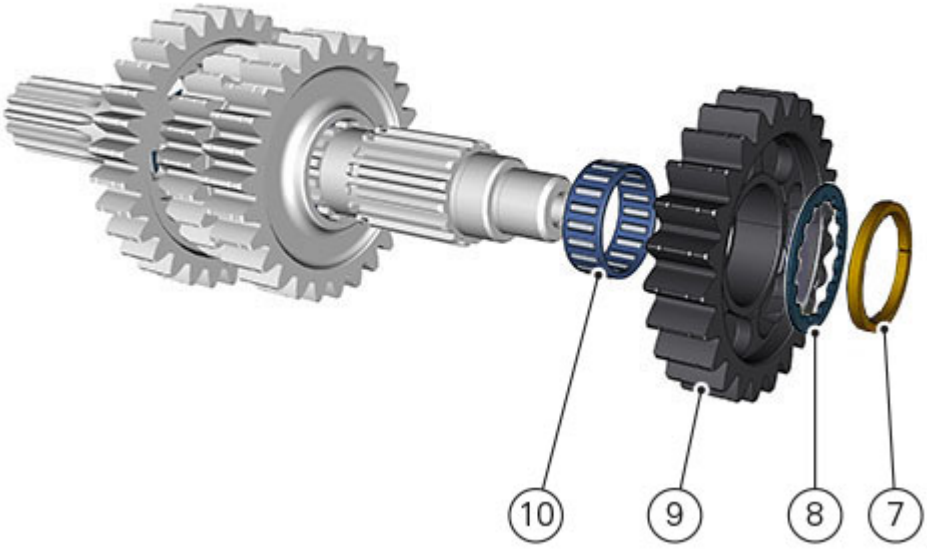

Fit the fifth speed driven gear (6) on the shaft.

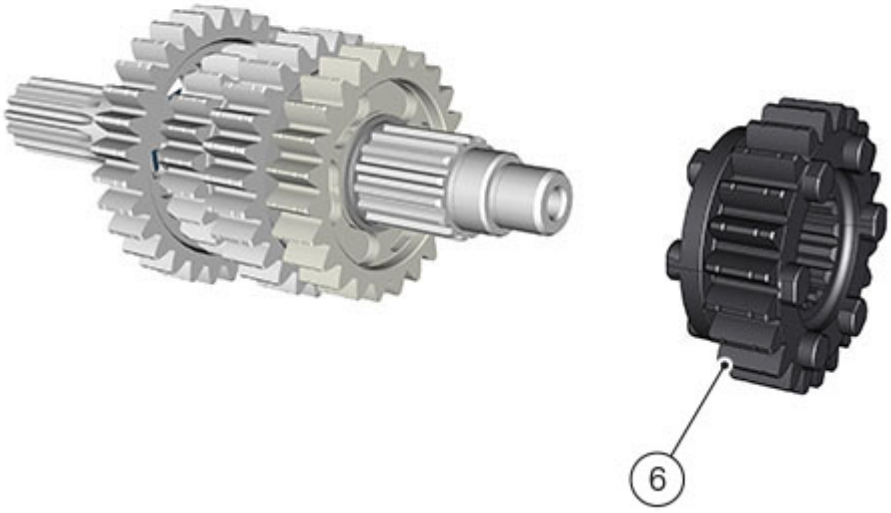

Fit washer (5), roller bearing cage (4) and first speed driven gear (3).

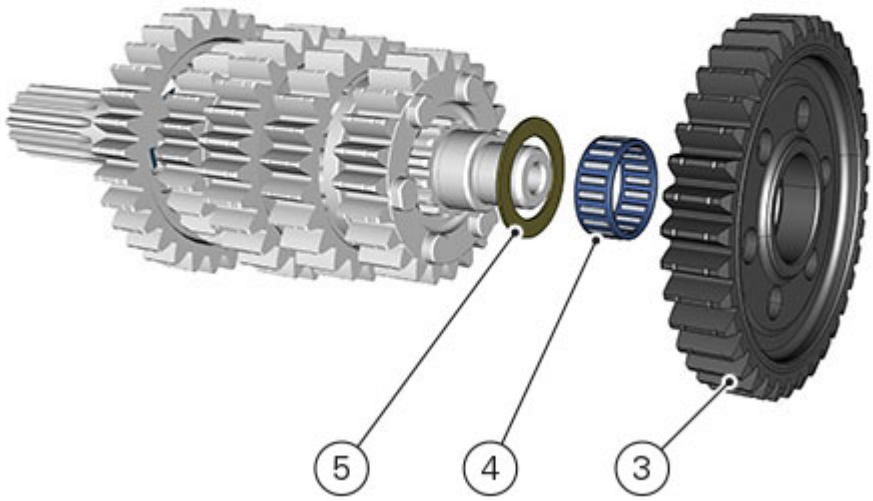

Refit clutch side washer (2) on the secondary shaft (16).

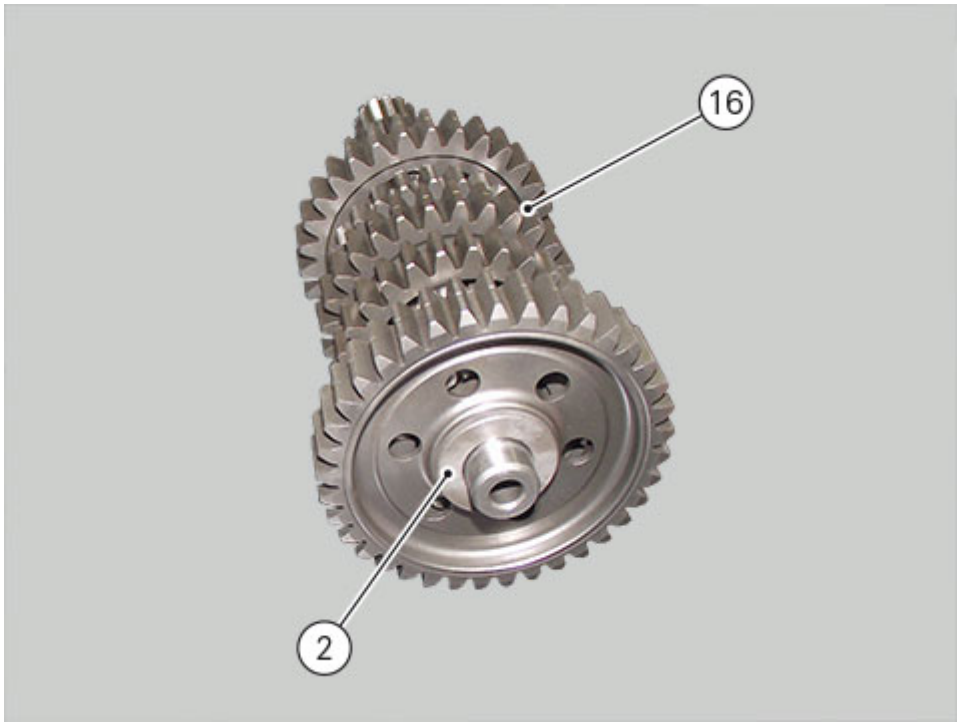

Inspecting the fork selector drum

Use a gauge to measure the clearance between fork pin and the groove on the selector drum.
If the service limit has been exceeded, determine which part must be replaced by comparing these dimensions with those of new components (Gearbox).
Also check the wear on the drum support pins; these must not show any signs of scoring, burrs, or deformation.
Turn the drum in the crankcase to establish the extent of radial play. If play is excessive, change whichever part is most worn.



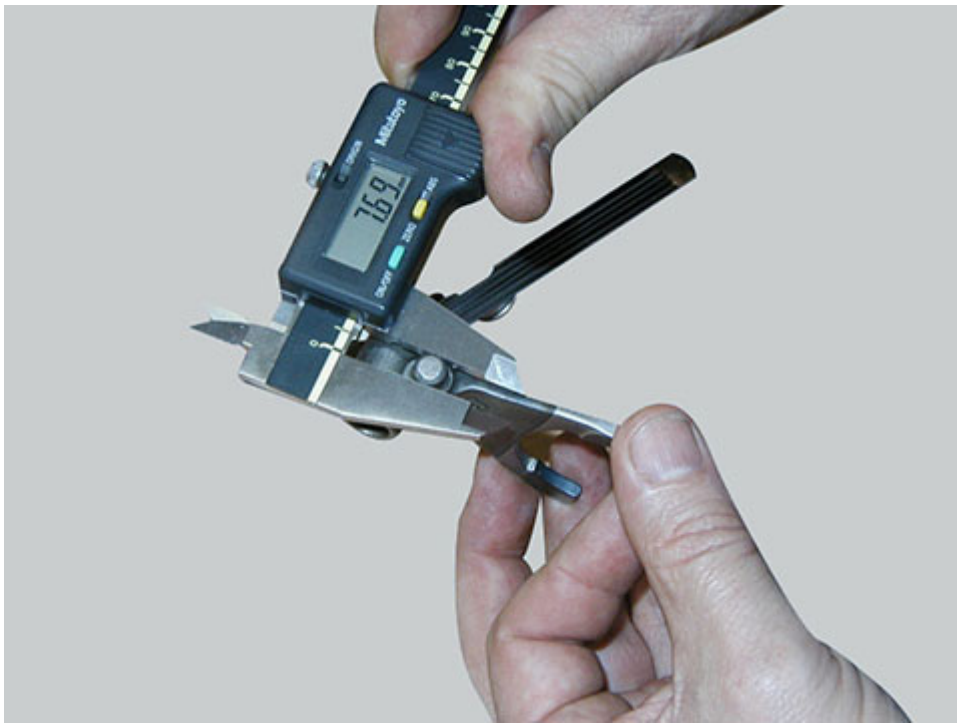

Inspecting the gear selector forks

Visually inspect the gear selector forks. Bent forks must be replaced as they may lead to difficulties in gear changing or may suddenly disengage when under load.
Use a feeler gauge to check the clearance of each fork in its gear groove.
If the service limit has been exceeded, check whether or not it is necessary to replace the gear or the fork by referring to the limits specified for each part (Gearbox).

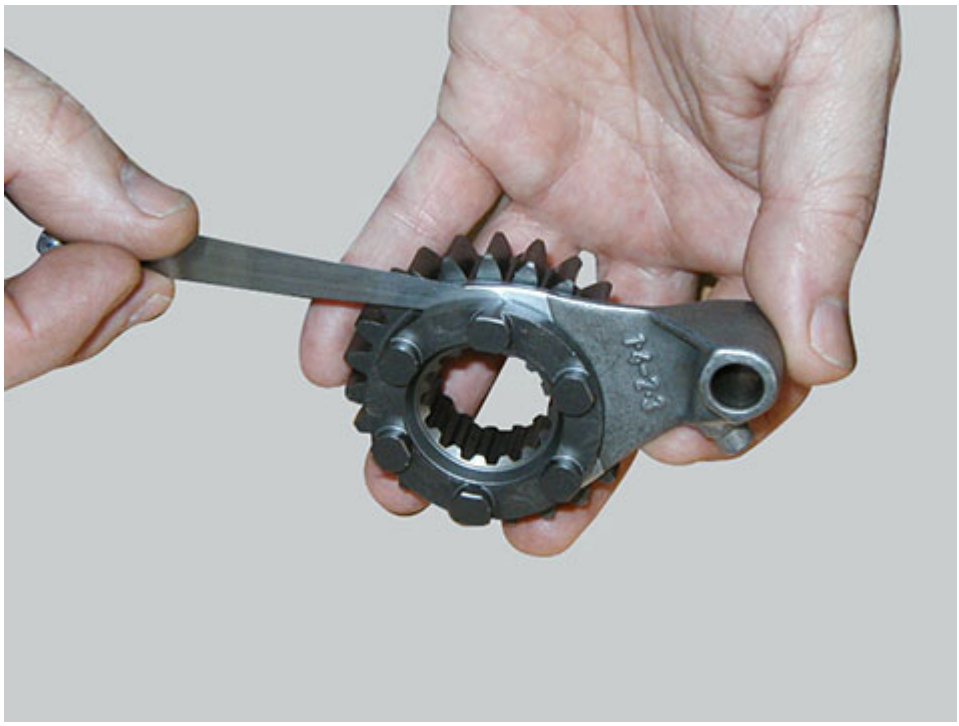

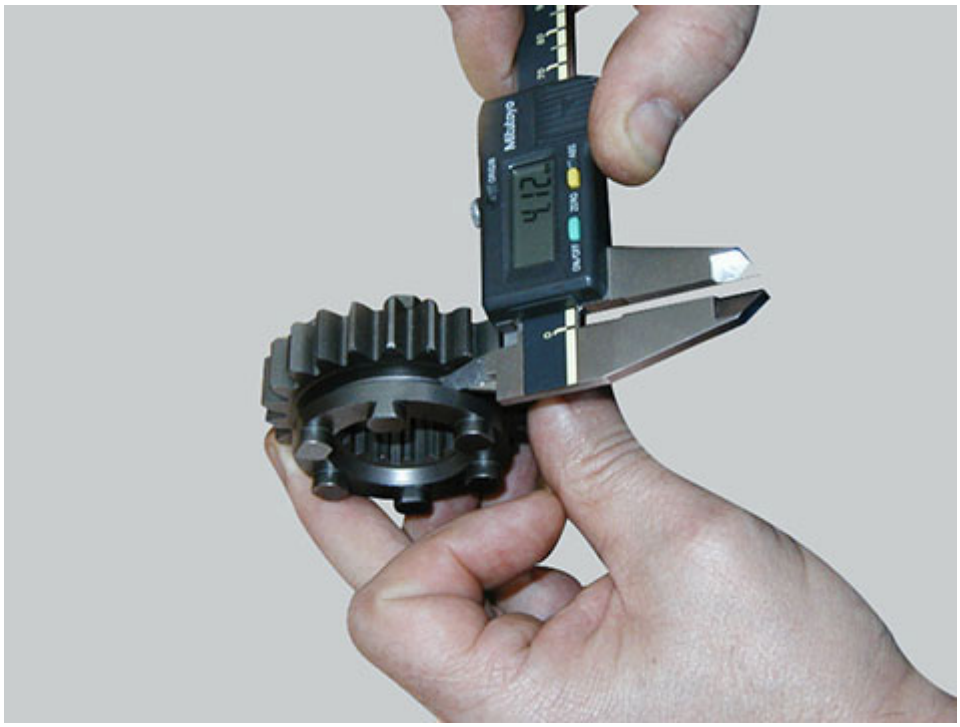


Mitutoyo
ON/OFF
ZERO
ABS

Overhauling the gearbox

Check the condition of the front coupling dogs of the gears. They must be in perfect condition and with no sign of wear on the edges of the teeth.
The idler gears must rotate freely on their shafts.
When refitting, make sure the circlips are correctly positioned.
Check the needle roller bearings for wear.
The threads and splines of the shafts must be in perfect condition.
Also check that the component parts of the gear selector mechanism are in good condition.

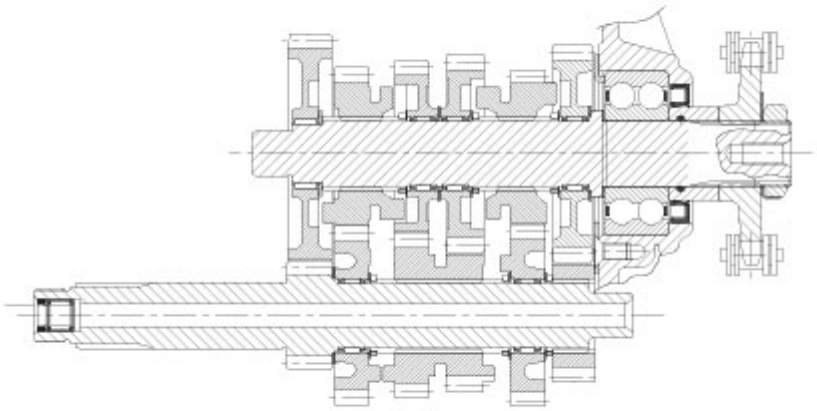

Engage the gears and check that the gearchange mechanism does not stick (selector fork-gear groove, and fork pin-desmodromic drum groove) due to incorrect end float.
Restore the correct end float by shimming the gearbox shafts and the selector drum with suitable shims.
For the total gearbox shaft and selector drum end clearance values, refer to Chapter "Gearbox".

Disassembling the gearbox shafts

Place the shaft in a vice in such a way to facilitate the disassembly operations.

Important

Take care not to invert the shim position upon reassembly: this would potentially lead to jamming when using the gear selector control, making it necessary to reopen the crankcase.

Disassembling the gearbox secondary shaft

Remove clutch side washer (2) from the secondary shaft (16).

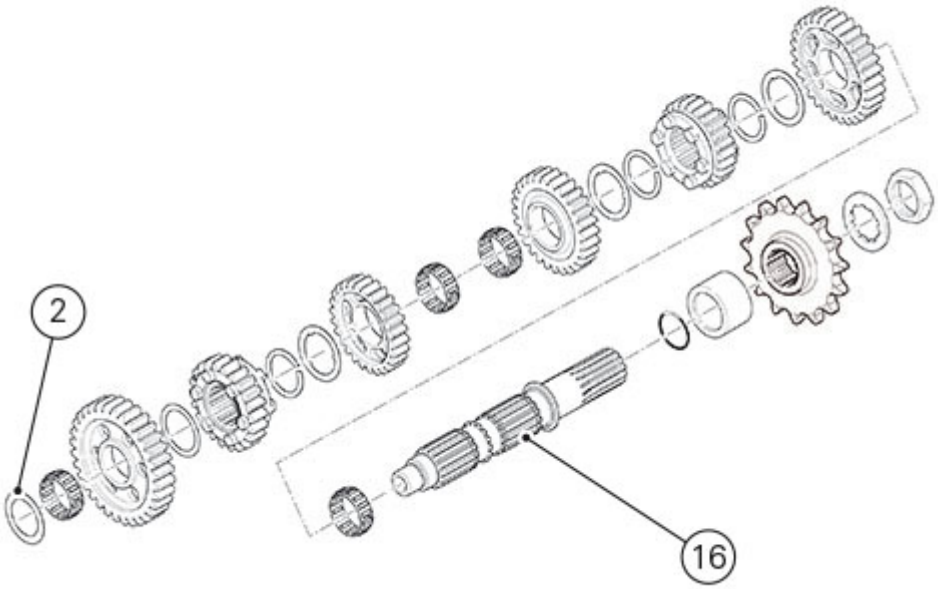

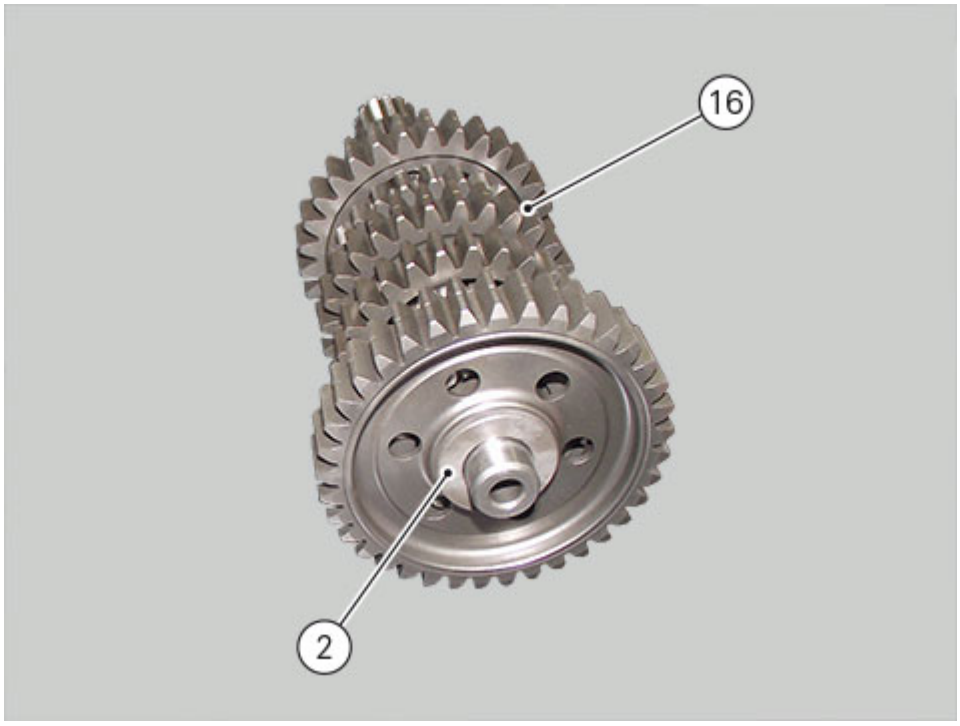

Withdraw the first speed driven gear (3) with the roller cage (4) and the shim (5).

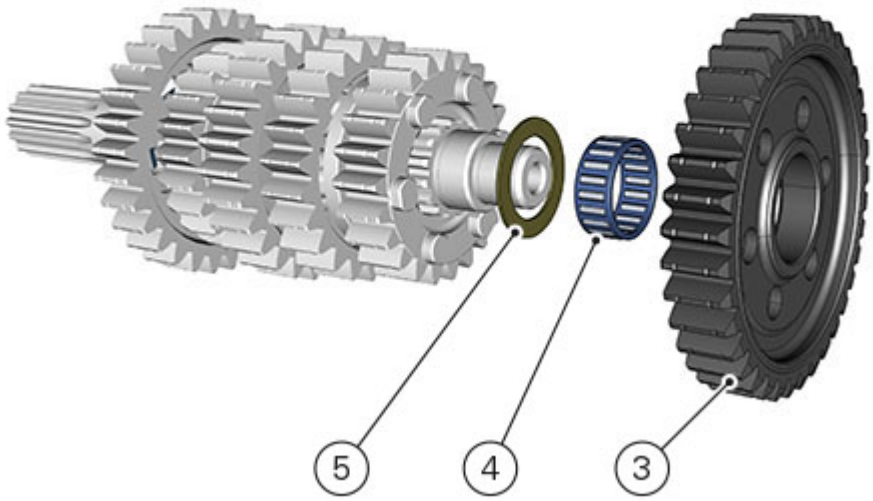

Remove the fifth speed driven gear (6).

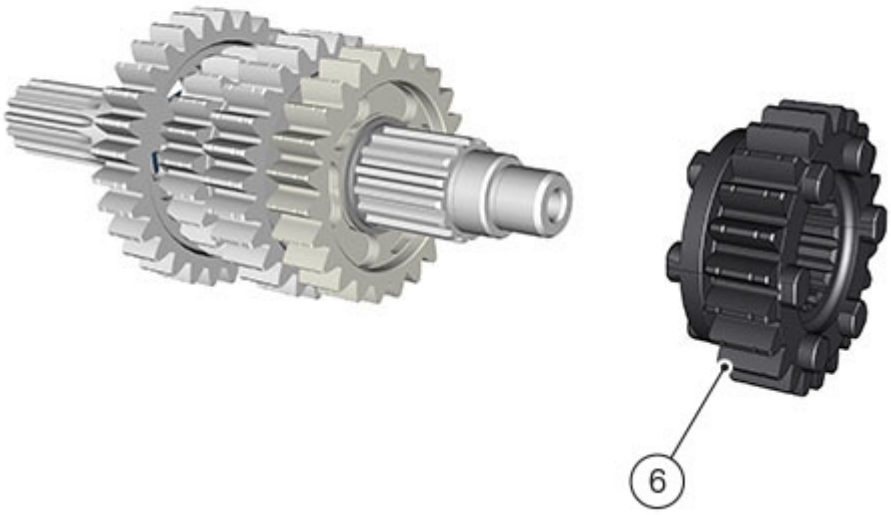

Use two flat blade screwdrivers to remove the snap ring (7) from its seat, taking care not to damage the shaft surface.
Slide off the splined washer (8).
Remove the fourth speed driven gear (9) with its roller bearing cage (10).

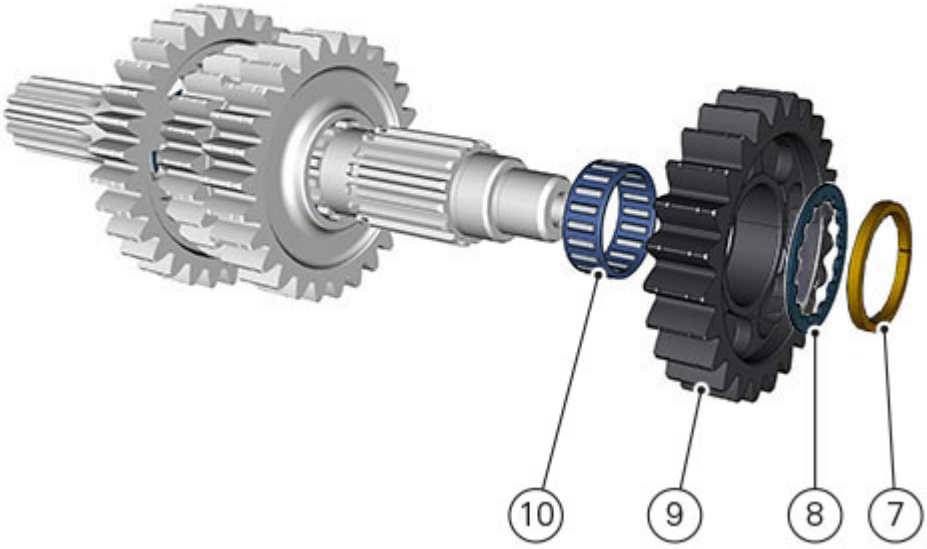

Remove the third speed driven gear (12).

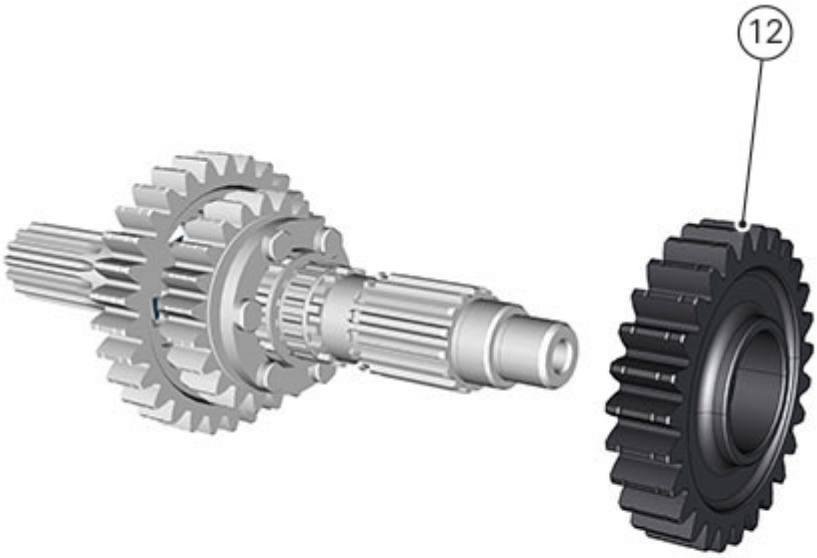

Remove the roller bearing cage (10), the splined washer (8) and the snap ring (7).
Remove the sixth speed driven gear (13).

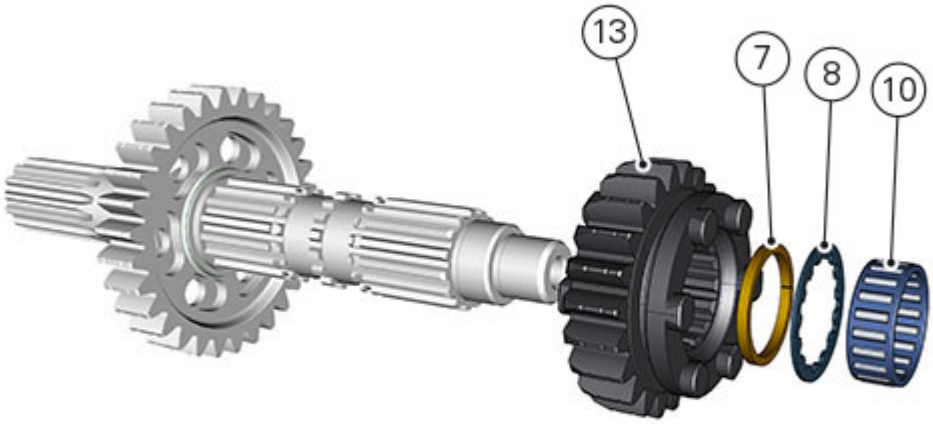

Remove the snap ring (7) and withdraw the splined washer (8) and the second speed driven gear (14). Withdraw the roller bearing cage (10). All the components have thus been removed from gearbox secondary shaft (16).

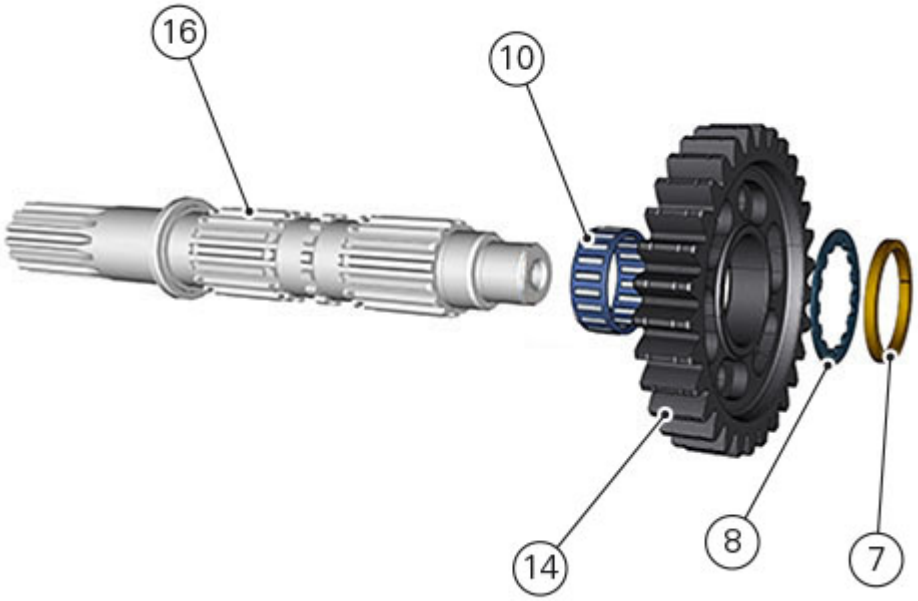

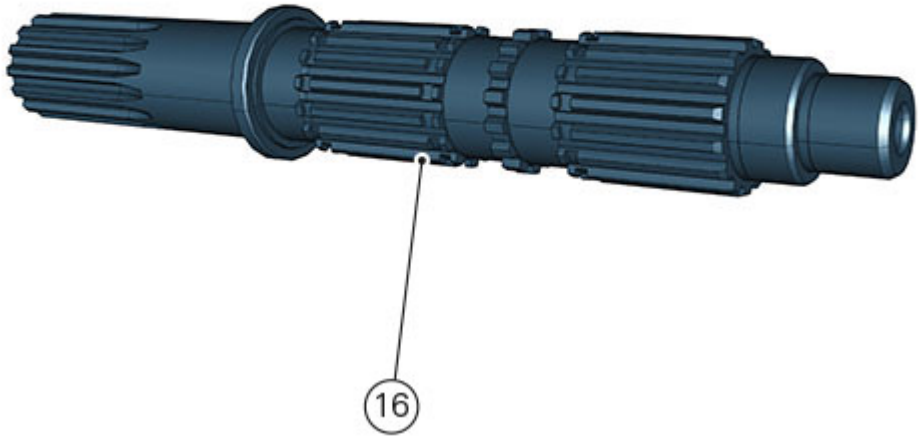

Disassembling the gearbox primary shaft

Remove chain side washer (17) from the primary shaft (23).

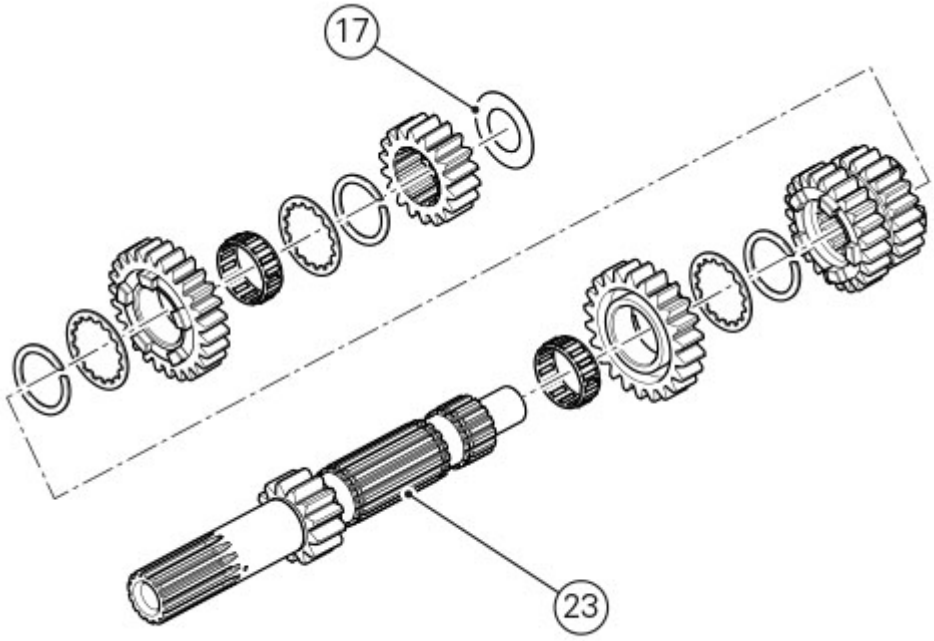

Remove the second speed driving gear (19). Use two screwdrivers to prise out the snap ring (7) and the splined washer (8).

Important

Take care to avoid damaging the surface of the shaft while removing the snap ring.

Remove the sixth speed driving gear (9) with its roller cage (10). Then remove the splined washer (8) and the snap ring (7).

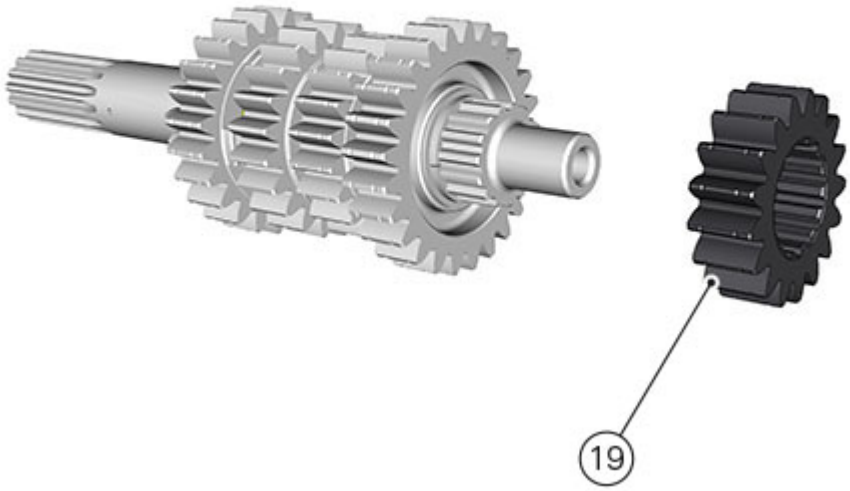

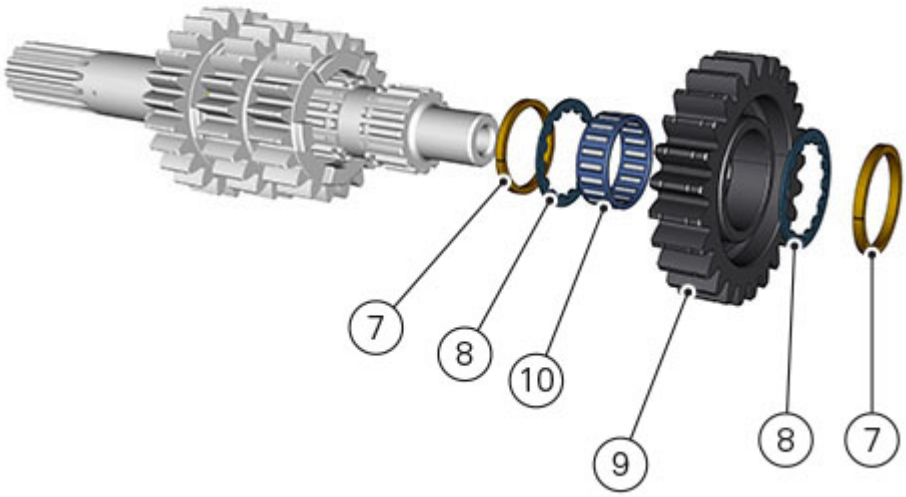

Withdraw the third and fourth speed driving gear (21).

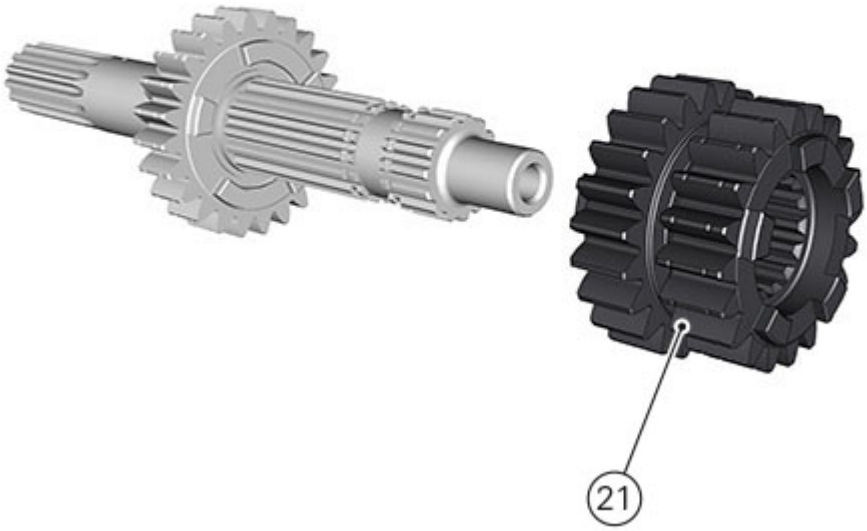

Remove the snap ring (7) and the splined washer (8).
Slide out the fifth speed driving gear (22) with the relevant roller bearing cage (10) from the primary shaft (23).

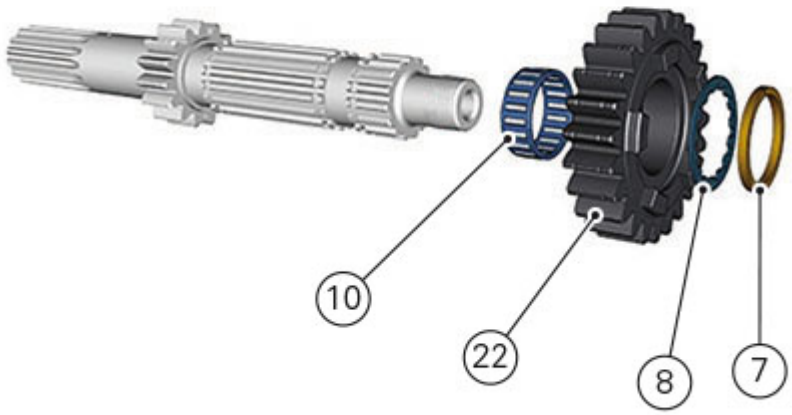

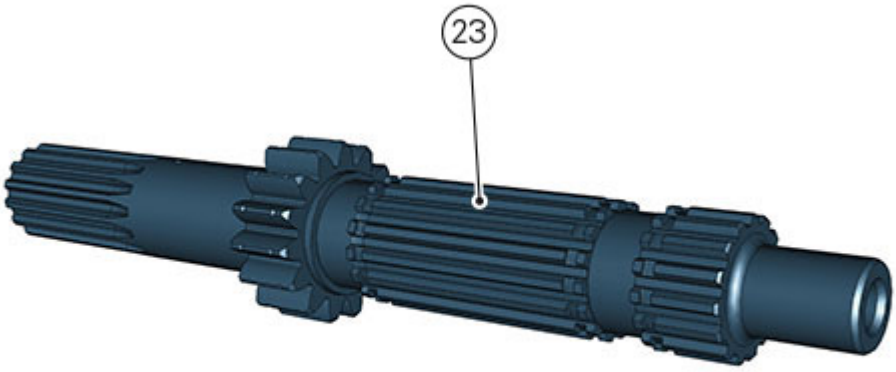
23

Removing the gearbox assembly

Remove the engine from the frame (Removing the engine).
Remove the front sprocket (Removing the front sprocket).
Remove the timing components (Removing the timing outer covers).
Remove the camshaft assembly (Removing the camshafts).
Remove the complete cylinder head assembly (Removing the cylinder heads).
Remove the complete cylinder/piston assembly (Removing the cylinder/piston assembly).
Remove the generator side cover and the generator assembly (Removing the generator cover).
Remove the oil pump (Removing the oil pump).
Remove the starter motor (Removing the starter motor).
Remove the cover, the drum and the clutch housing (Removing the clutch).
Remove the clutch cover (Removing the clutch cover).
Remove the primary drive gear (Removing the primary drive gear).
Separate the crankcase halves (Separating the crankcase halves).

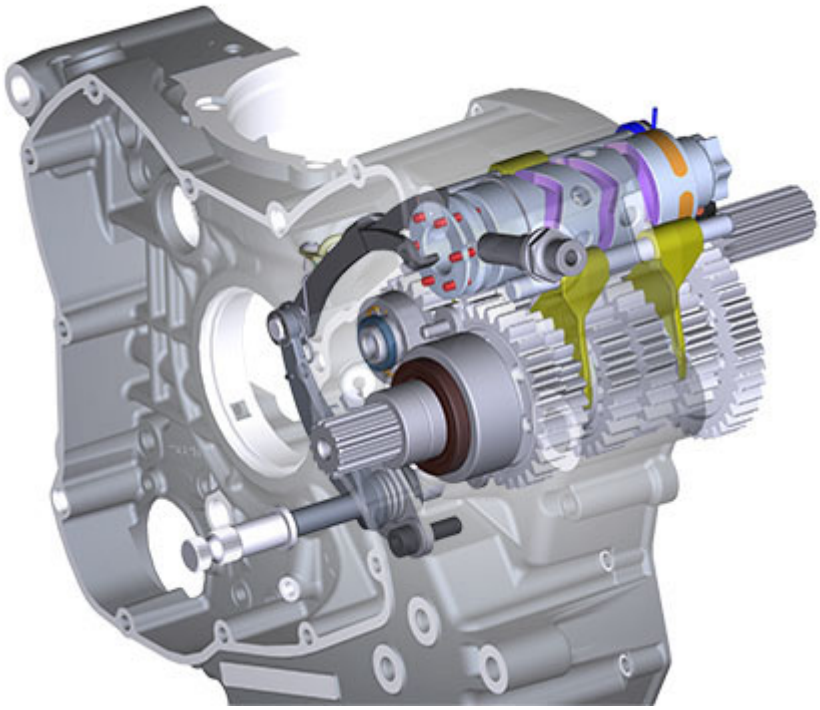

Withdraw the selector fork shafts (1).
Move the forks (2), (3) and (4) to disengage them from the slots in the selector drum (5).

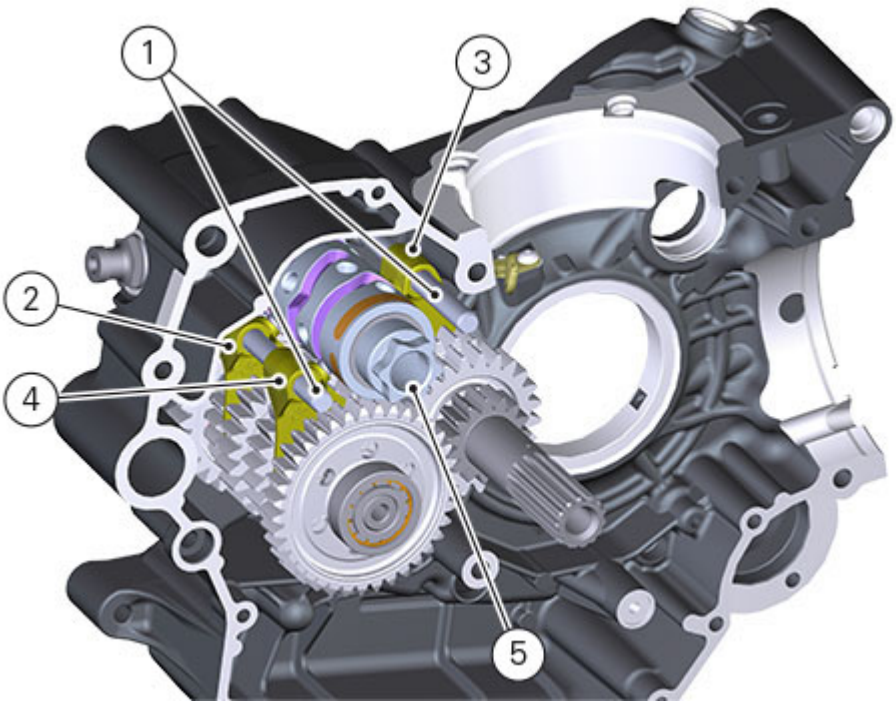

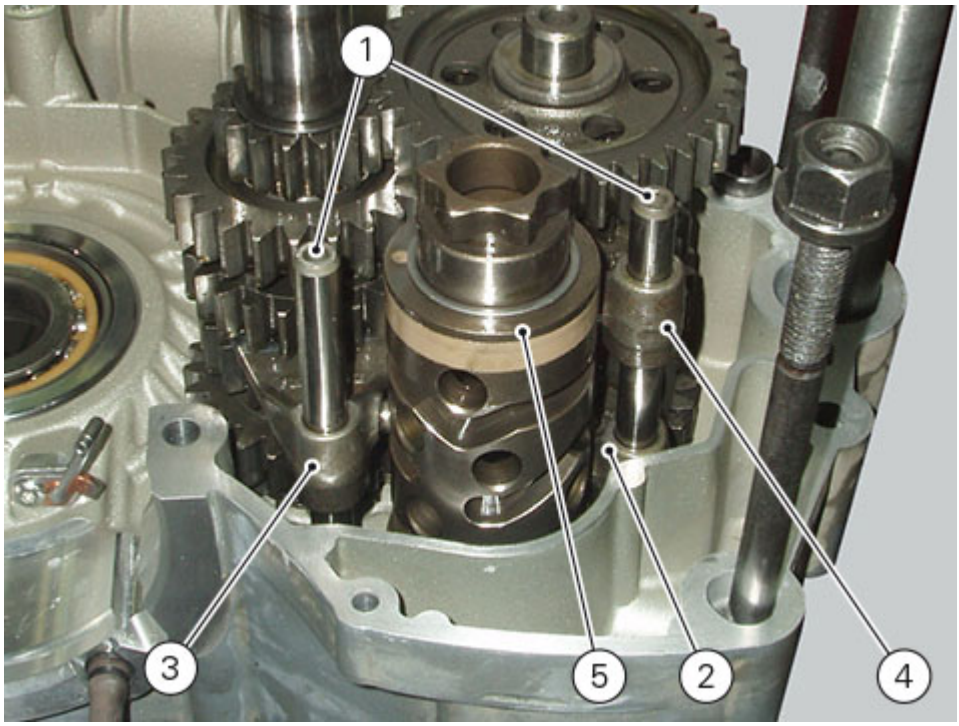

Remove the gear selector drum (5) taking care not to invert the fitted shims (6) and (7).

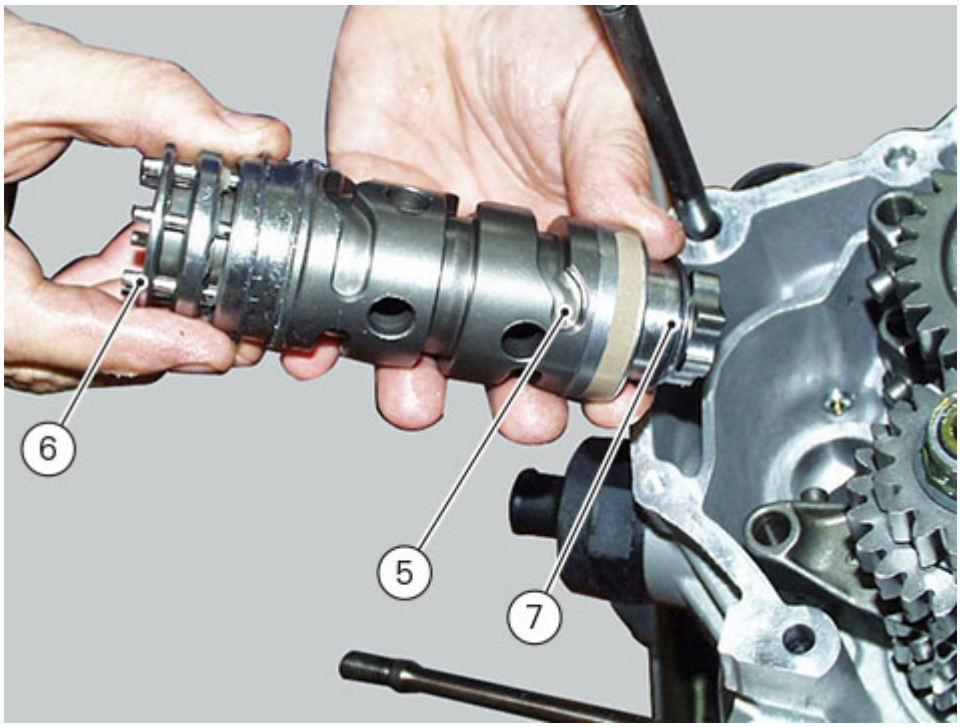

Once removed, it is possible to replace the special rollers (8).

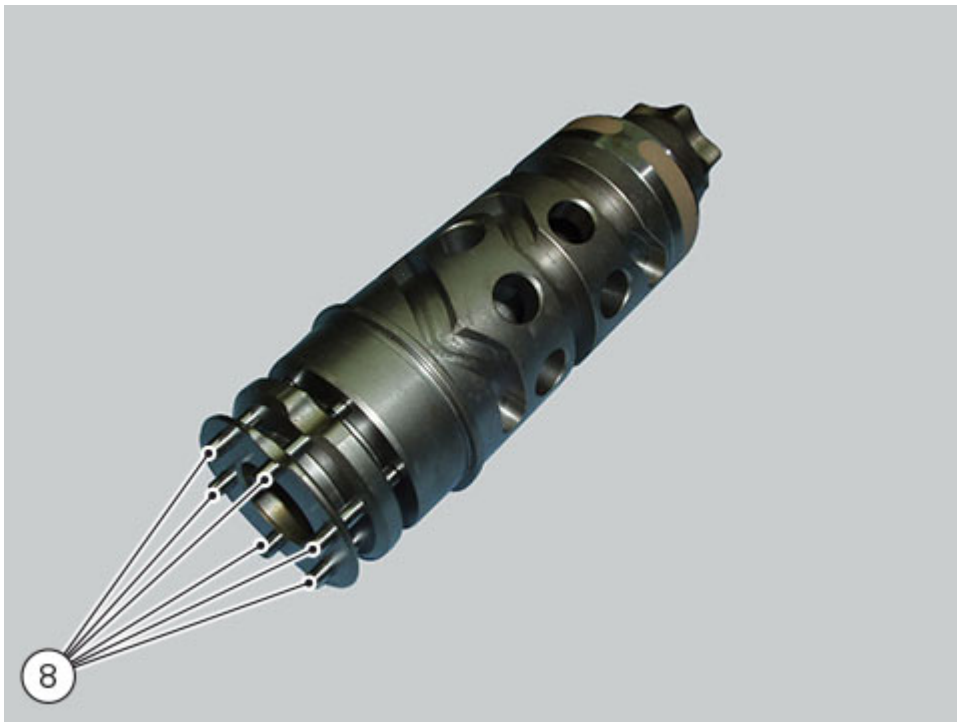

Remove gear selector forks (2), (3) and (4).

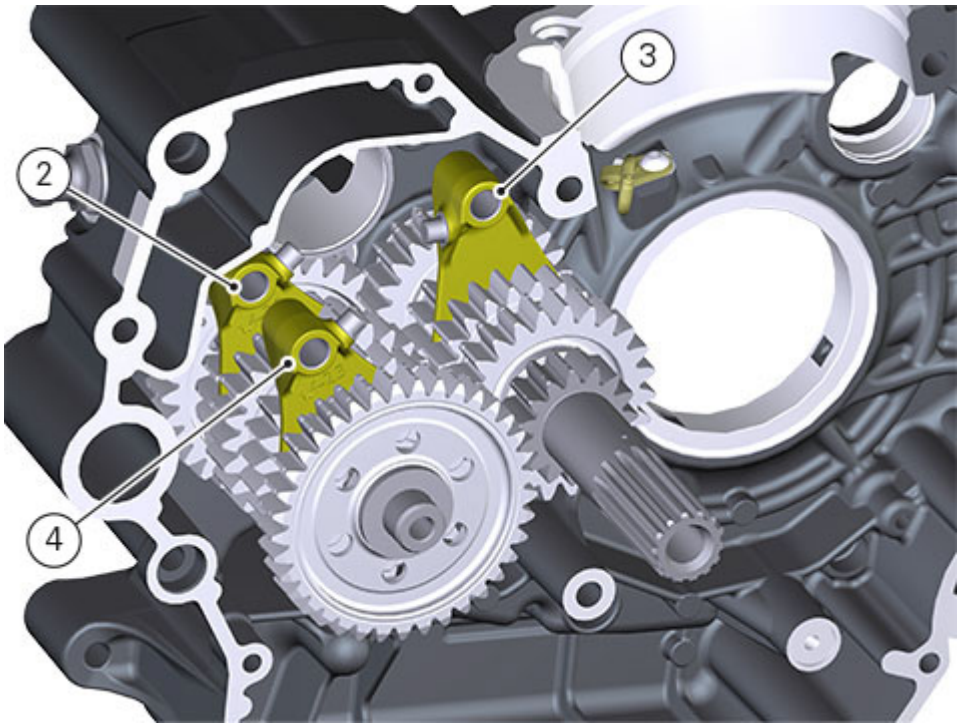

Remove the gearbox primary (9) and secondary (10) shafts complete with gears, taking care to recover the shim washers on the ends of the shafts.
If the bearing inner rings (A) are left on the shafts, slide them off the ends of the gearbox primary (9) and secondary (10) shafts as described in "Separating the crankcase halves".

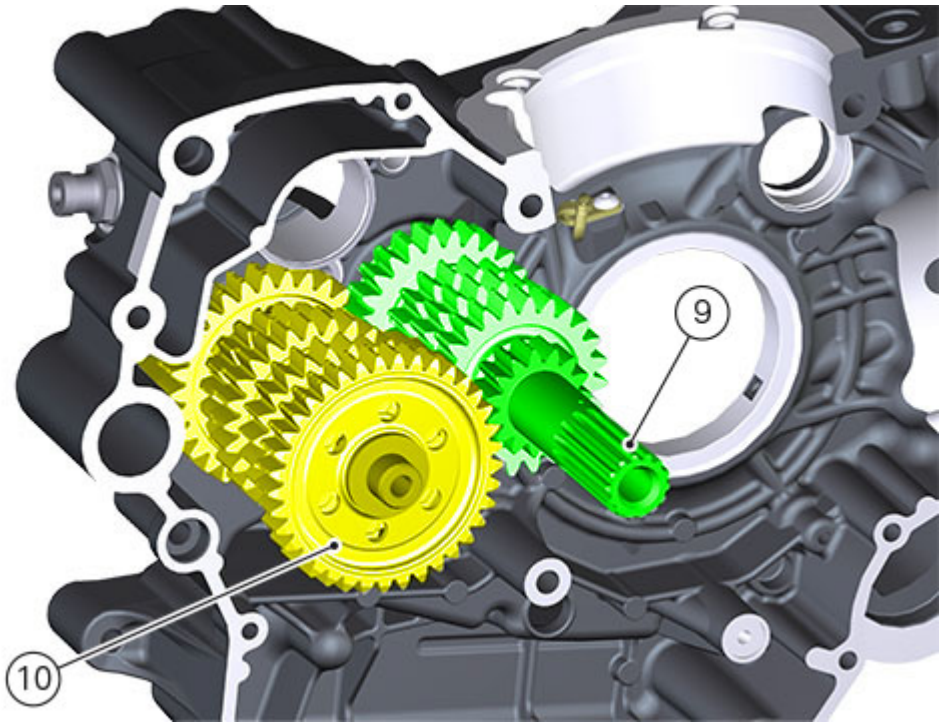
9
10

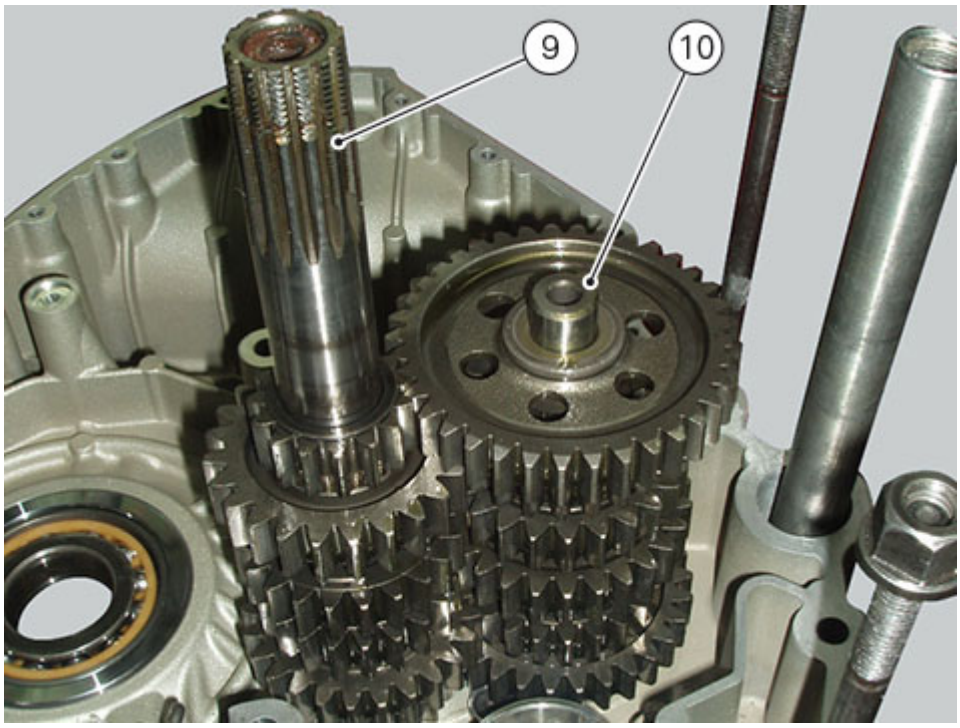
9
10

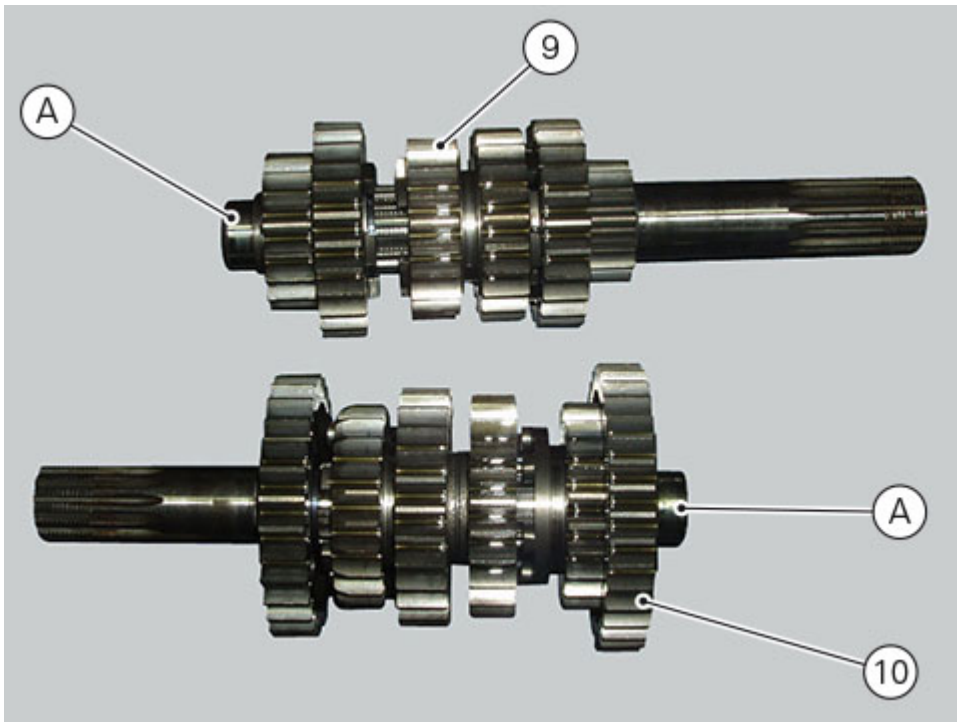
9
A
A
10

Fitting the generator cover

Before installation, make sure that the water pump assembly has been fitted on the generator cover (5) (Refitting the water pump).

If bearings (11) and (13) have been removed, use specified grease to lubricate the bearing seat on the generator cover (5) and insert counter-washer (14) with the bevelled edge facing downwards.
Drive first the shielded bearing (13) and then unshielded bearing (11) fully home as shown in the figure, so that the closed side of the plastic cage is facing upwards.
Install the other circlip (12) in the suitable seat of the generator cover, onto bearing (11).

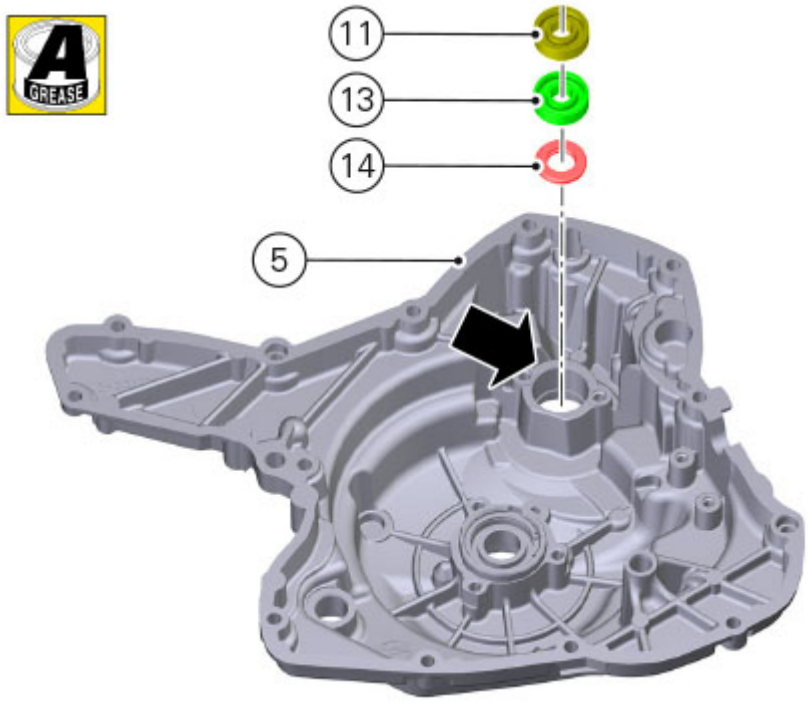

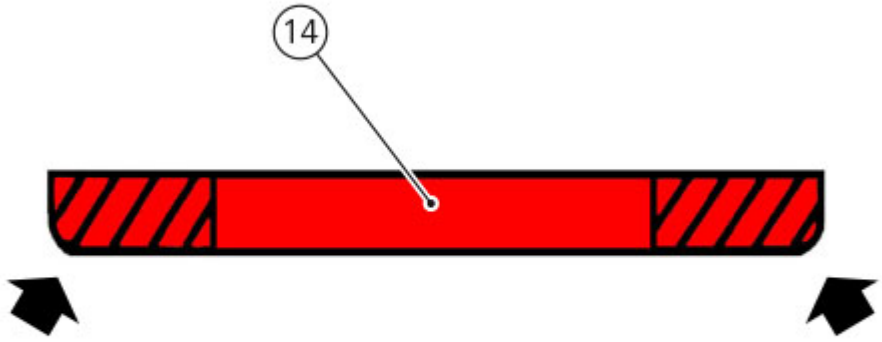

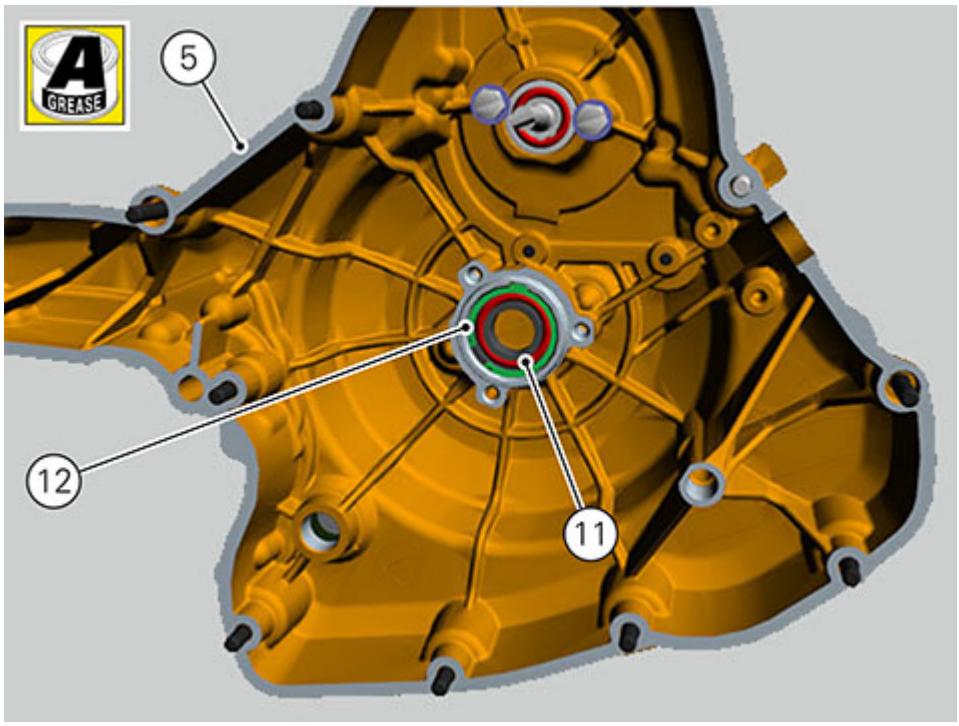

If previously removed, refit stator (8) inside generator cover (5) taking care to correctly position the stator cable so that its exit point faces downwards and towards the cover recess.
Fit rubber element (C) in the cover recess.
Apply the specified threadlocker to screws (7).
Align the stator holes with the generator cover (5) threaded holes and start screws (7).
Tighten the screws (7) to a torque of 10 Nm (Min. 9 Nm - Max. 11 Nm).

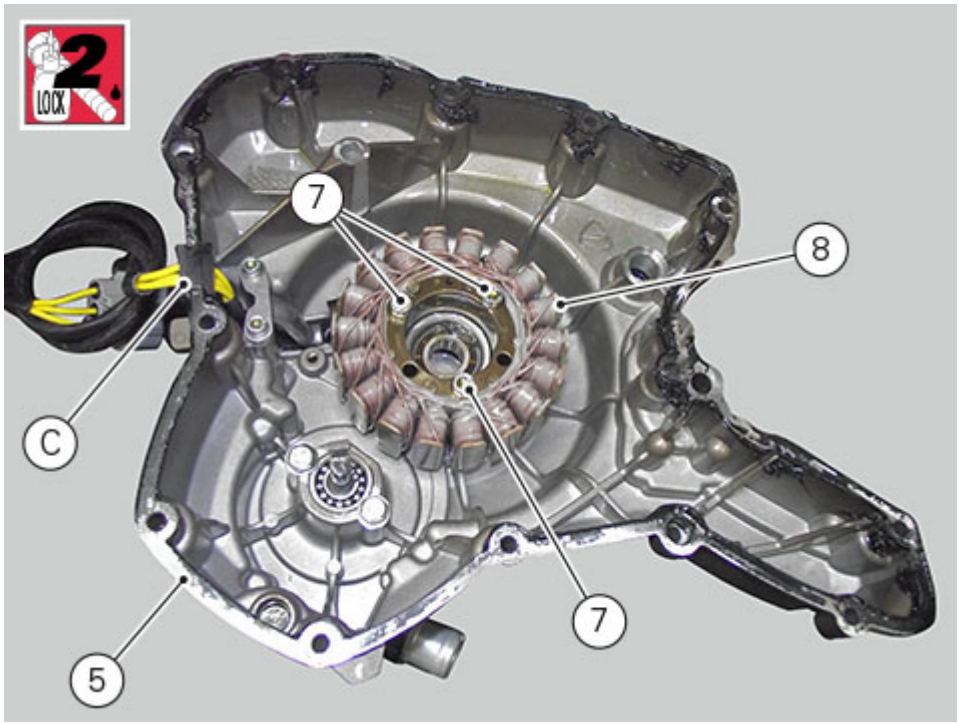

If bracket (4) has been previously removed, check that cable rubber element (C) is correctly inserted in the relevant seat on the generator cover (5).
Fit bracket (10) above the stator cable.
Apply specified threadlocker on screws (9) and start them on the cover.
Check that the stator cable is correctly positioned under bracket (4) and tighten screws (9) to a torque of 5 Nm (Min. 4.5 Nm ± Max. 5.5 Nm).

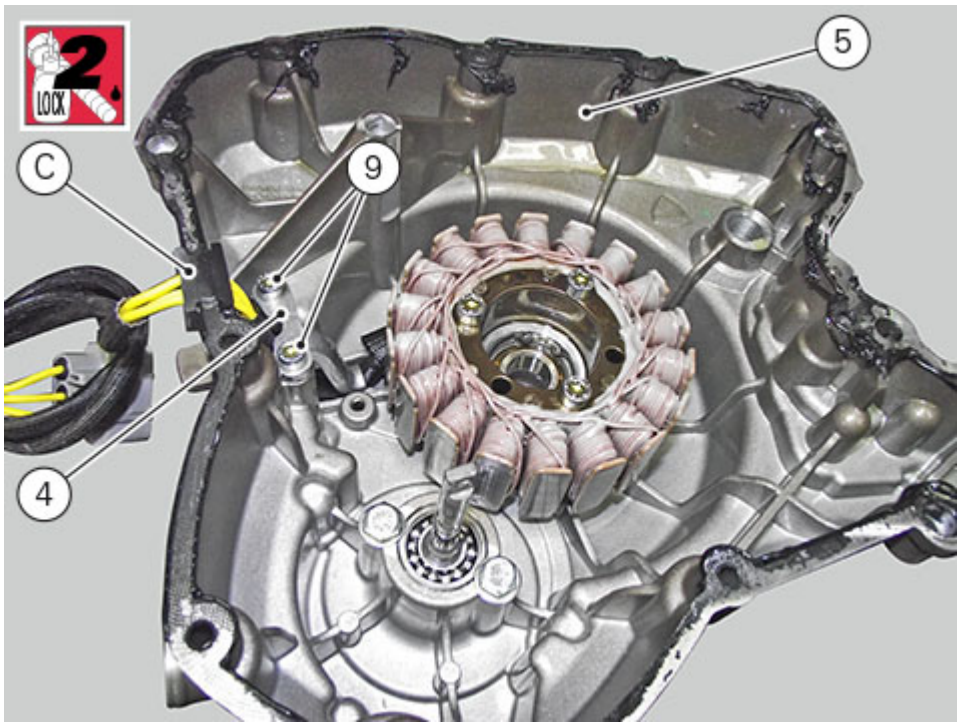

Remove any scale and grease from the mating surfaces of the left-hand crankcase half and the generator cover.
Insert the two reference pins (15).
Spread a continuous uniform bead of DUCATI sealing compound on the cover mating surface, and around the holes for the screws and bushes.

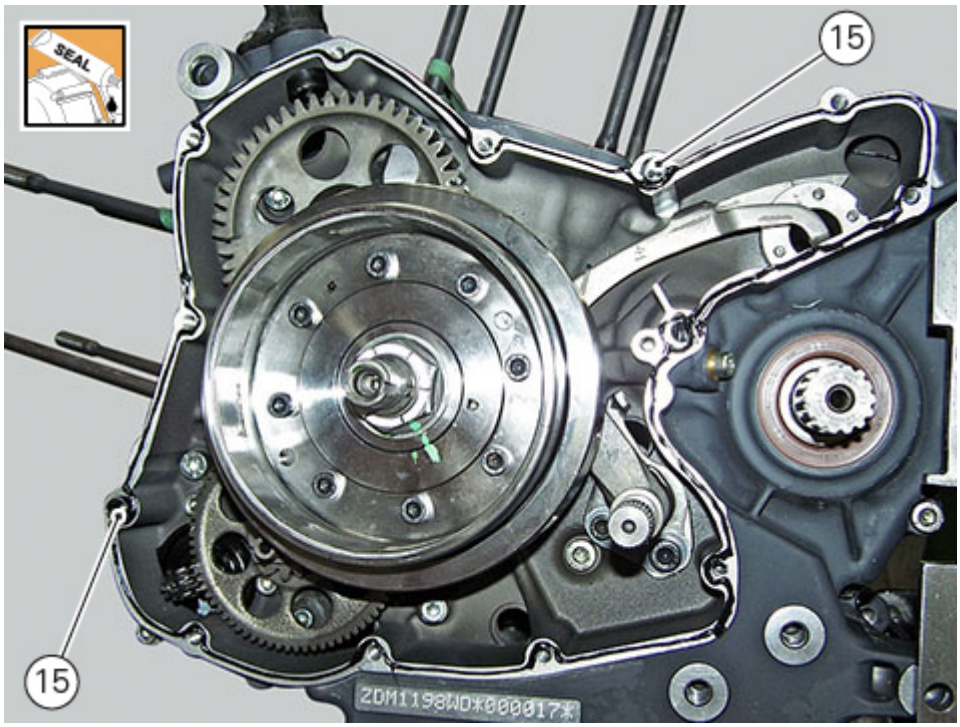

Grease the crankshaft and the gearchange lever shaft ends to facilitate installation of the cover and to prevent the sealing ring (6) from being damaged.
While positioning the cover (5) on the crankcase half, slightly turn the timing layshaft belt rollers to facilitate insertion of the pump drive shaft.

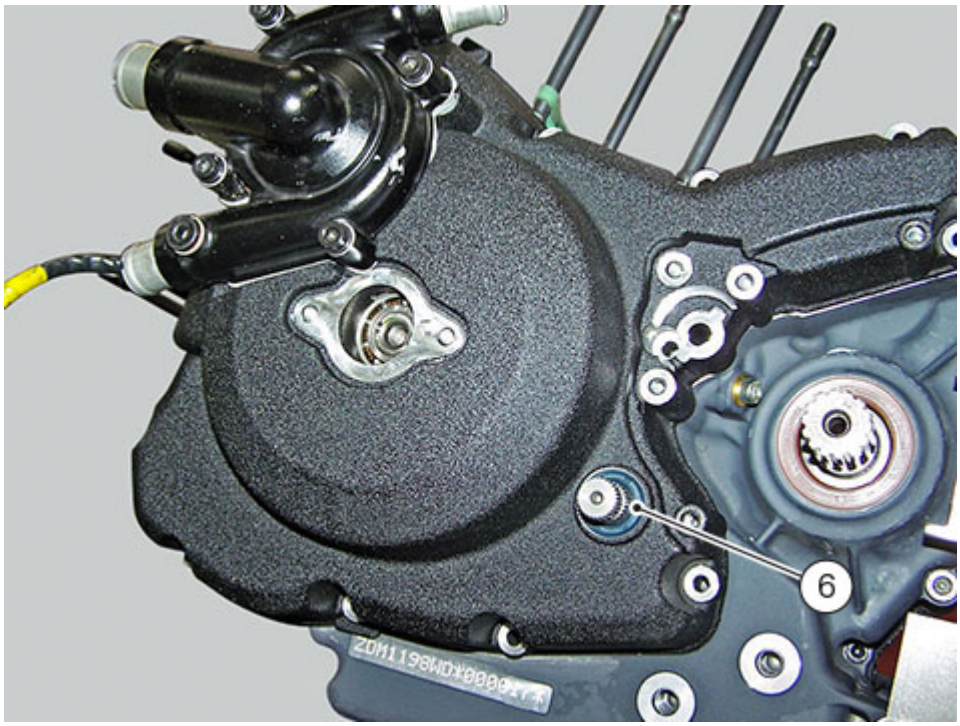

Engage generator cover recess (D) on pin (E) of the starter motor gear.

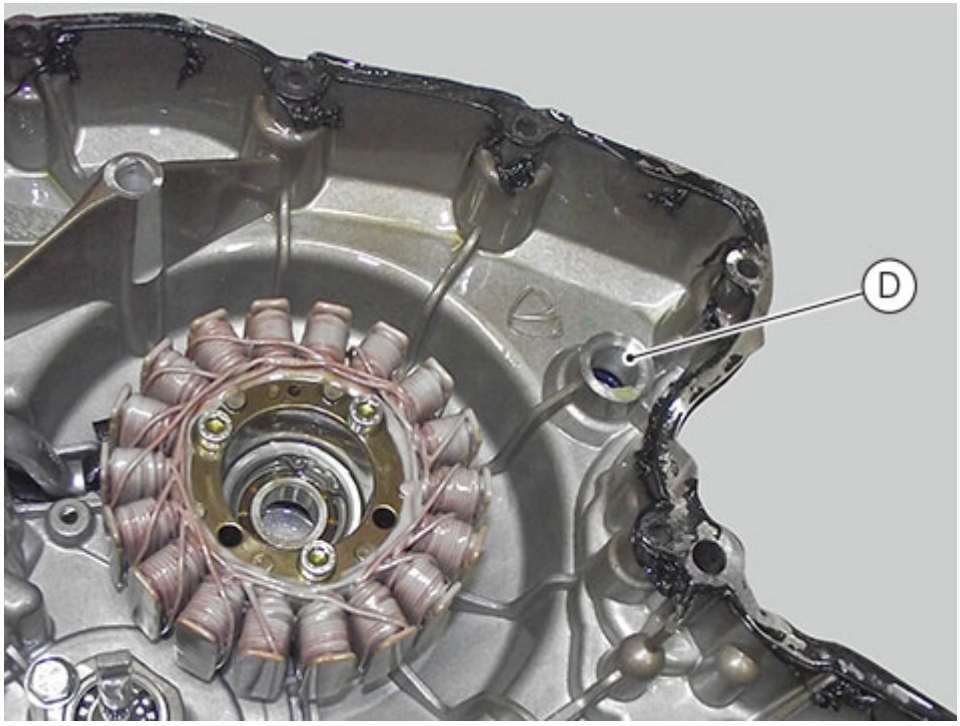

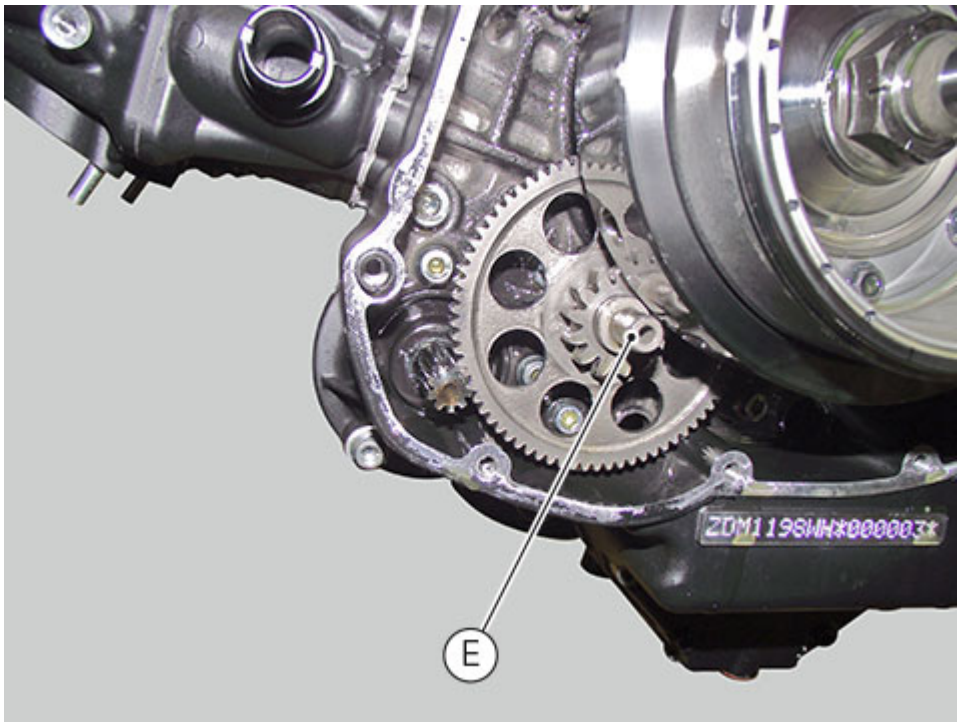

Tap the generator cover at different positions with a rubber mallet to facilitate its positioning on the shafts and centring bushes.

Note
Should it be necessary to remove the cover again, fit the puller no. 88713.1749 located in the threaded holes at the crankshaft.

Start the ten retaining screws (4) and the two retaining screws (3) to a torque of 10 Nm (Min. 9 Nm - Max. 11 Nm).

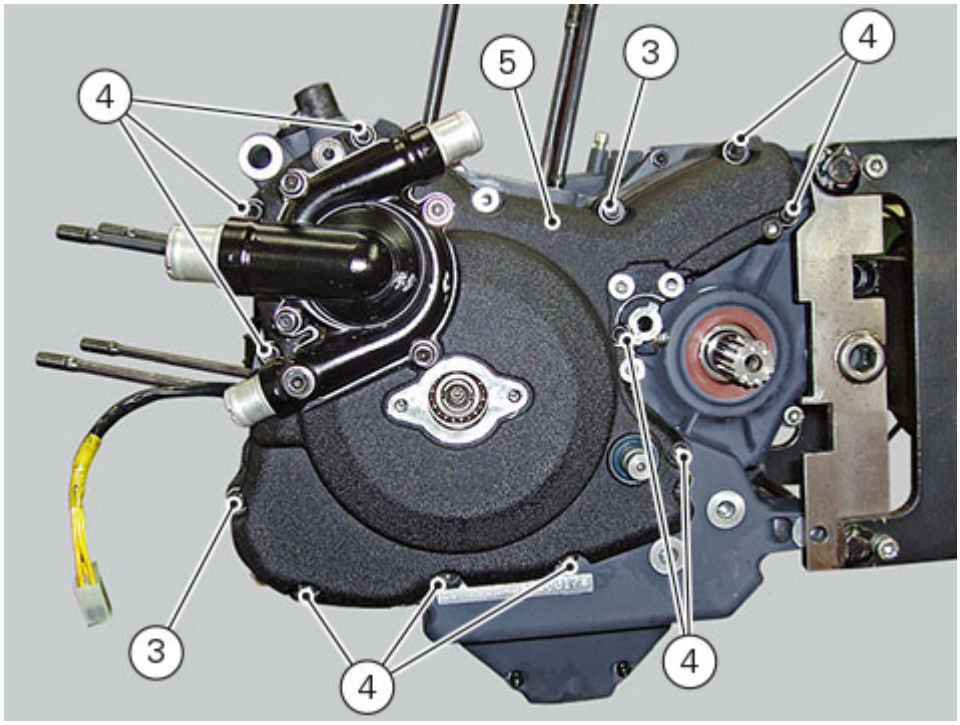

If the sealing ring (6) has not been previously removed, damp it with alcohol and install it in the generator cover (5), at the gearchange lever shaft.

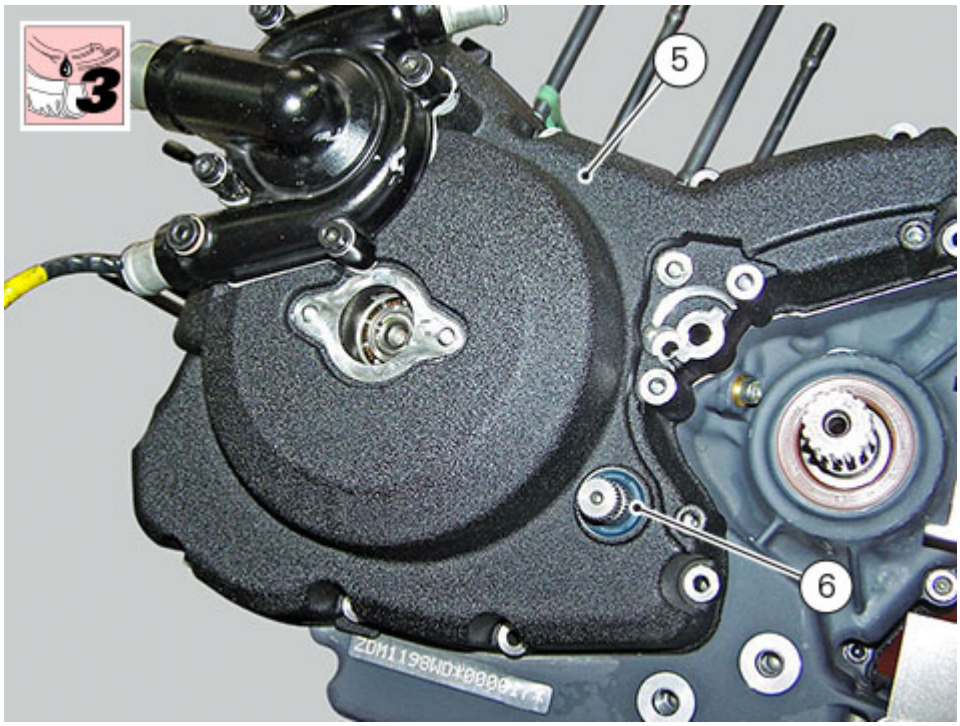

If plug (16) has been removed, fit washer (17) on the pick-up sensor inspection plug (16).
Apply specified threadlocker on plug (16) thread, start it on generator cover (5) and tighten it to 15 Nm (Min. 13 - Max. 17 Nm).

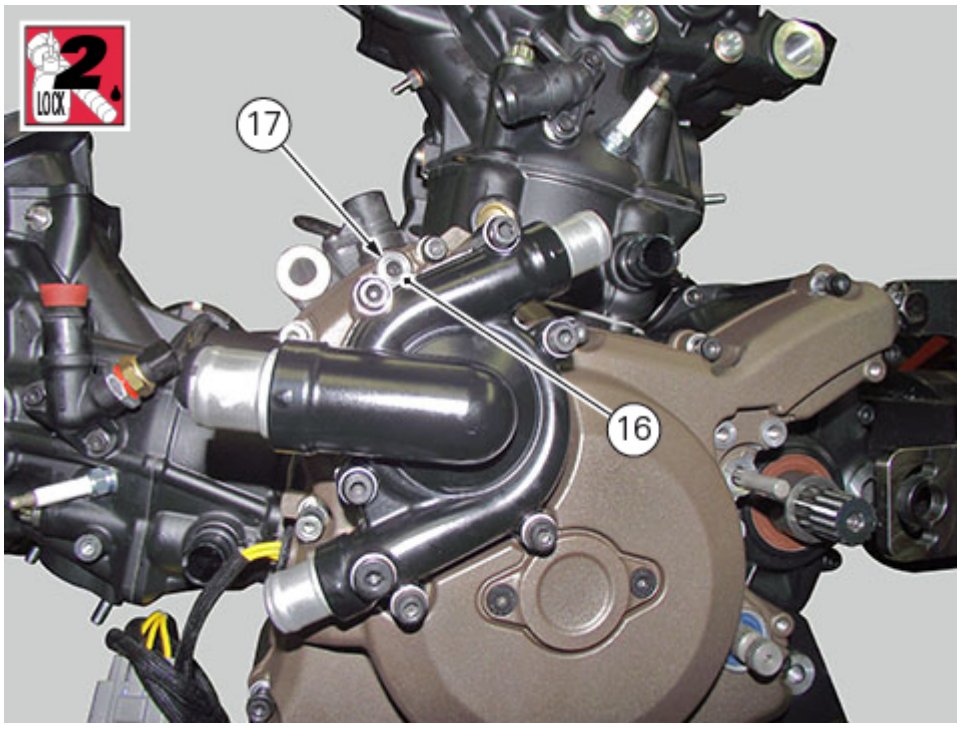

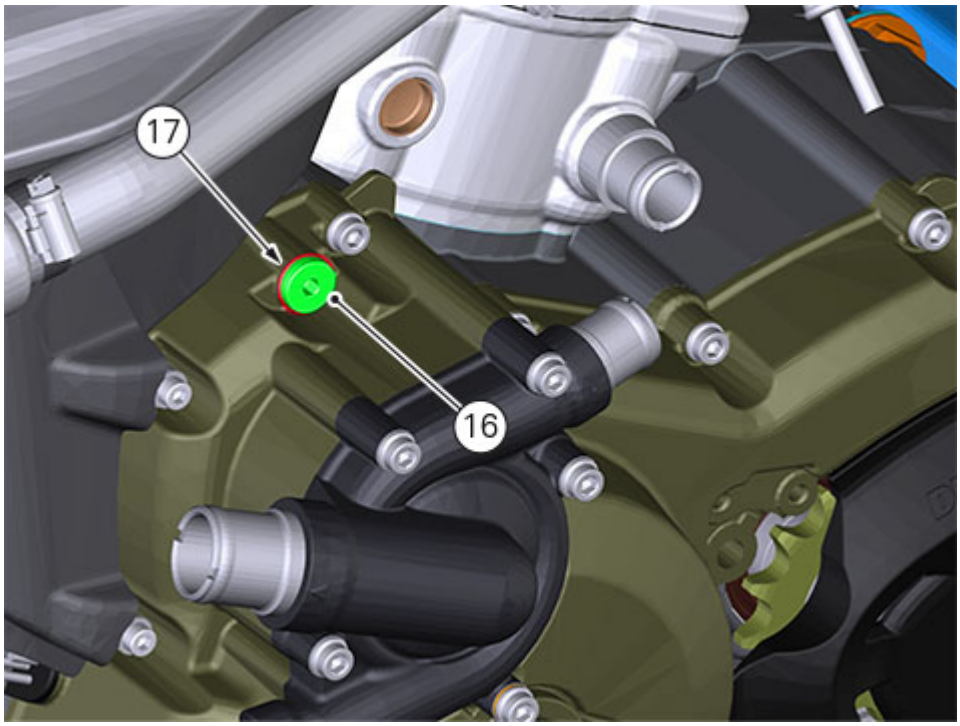

Make sure that the O-ring (18) is installed on the cover (1).
Apply grease on screws (2) and tighten them to 5 Nm (Min. 4.5 Nm - Max. 5.5 Nm).

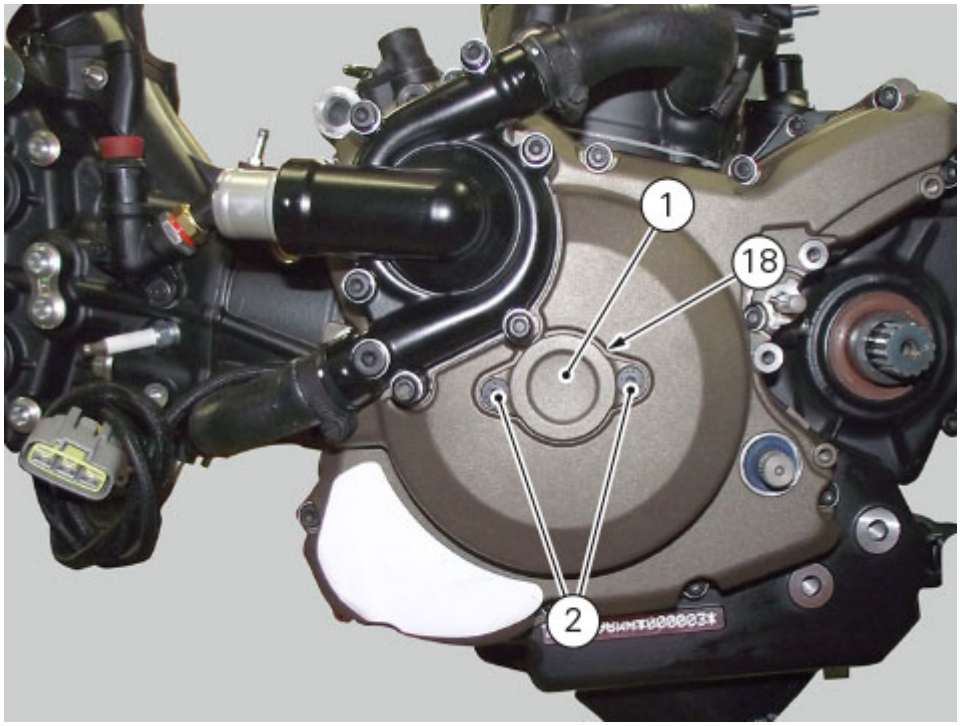

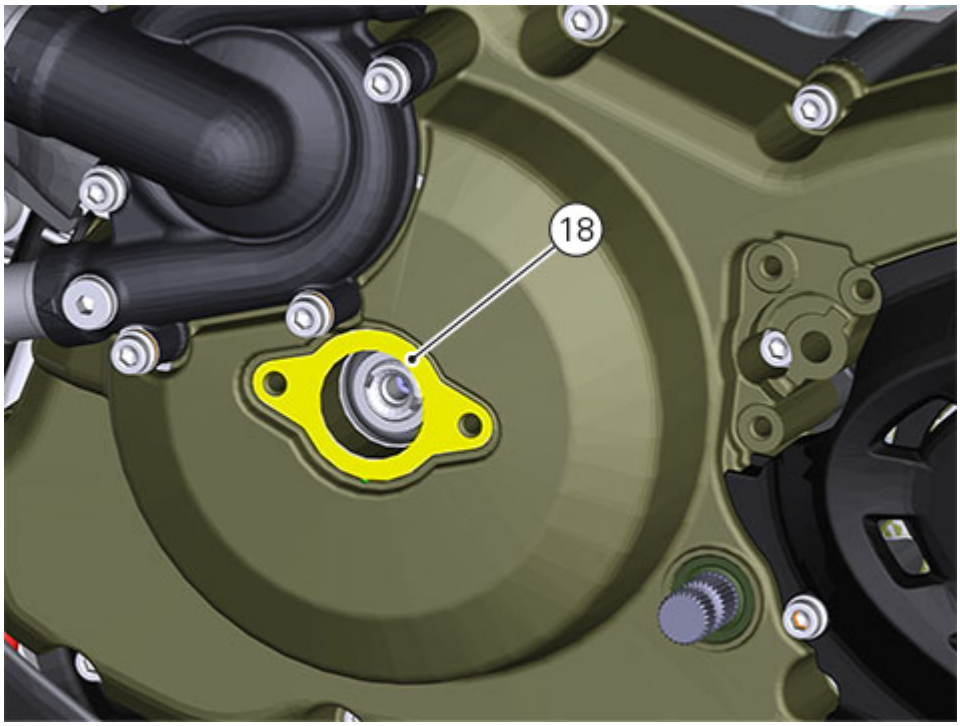

Connect connector (A) of the generator cable.

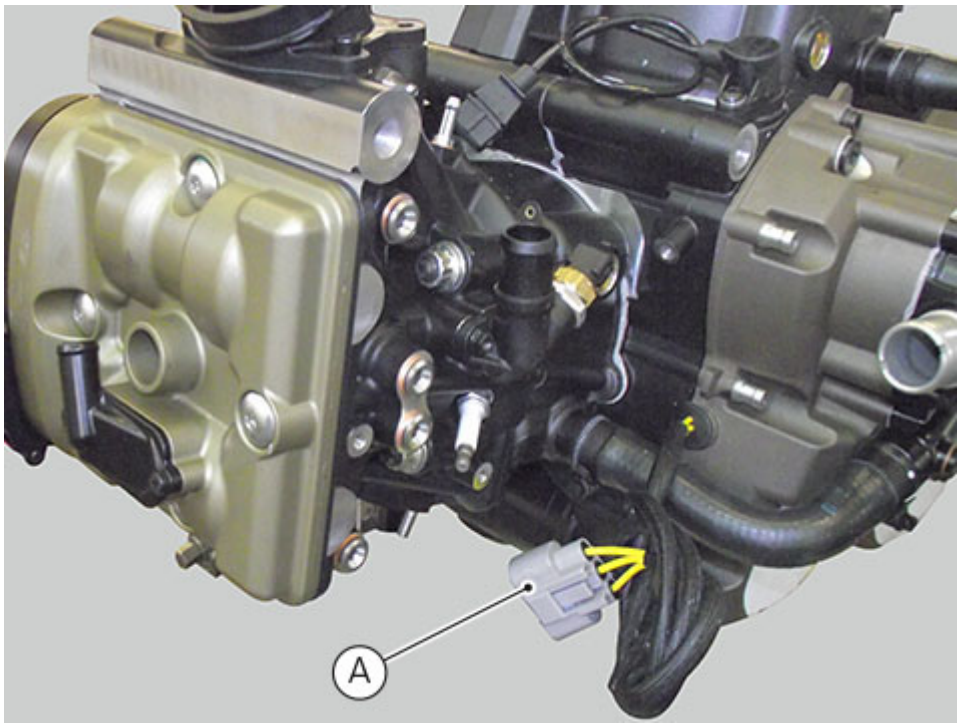

Refit the gear shift (Refitting the gear shift).
Fit the clutch slave cylinder (Refitting the clutch).
Refit the front sprocket cover (Refitting the front sprocket cover).
Fill with engine oil (Changing the engine oil and filter cartridge).
Fill the cooling system (Changing the coolant).

Fitting the flywheel/generator assembly

Fit the roller cage unit (6) with washer (7) and internal race (5), applying prescribed grease on the washer (7).



Install the roller bearing cage (6), washer (7) and inner race (5) assembly on the crankshaft.

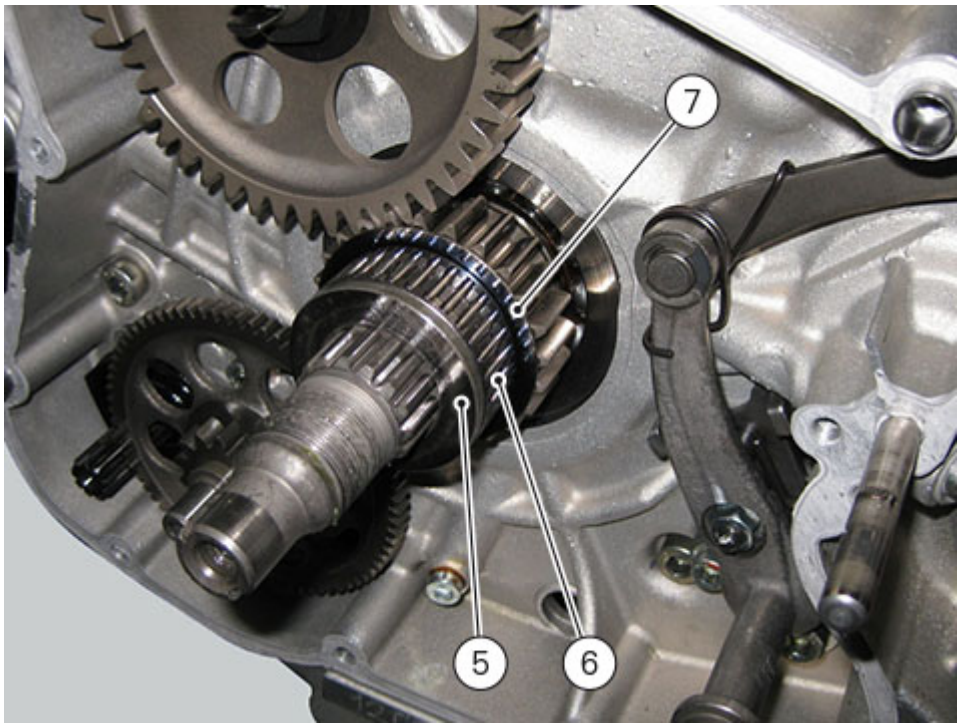

Install the flywheel assembly (3) with the gear (4), aligning the notches as shown in the photo.

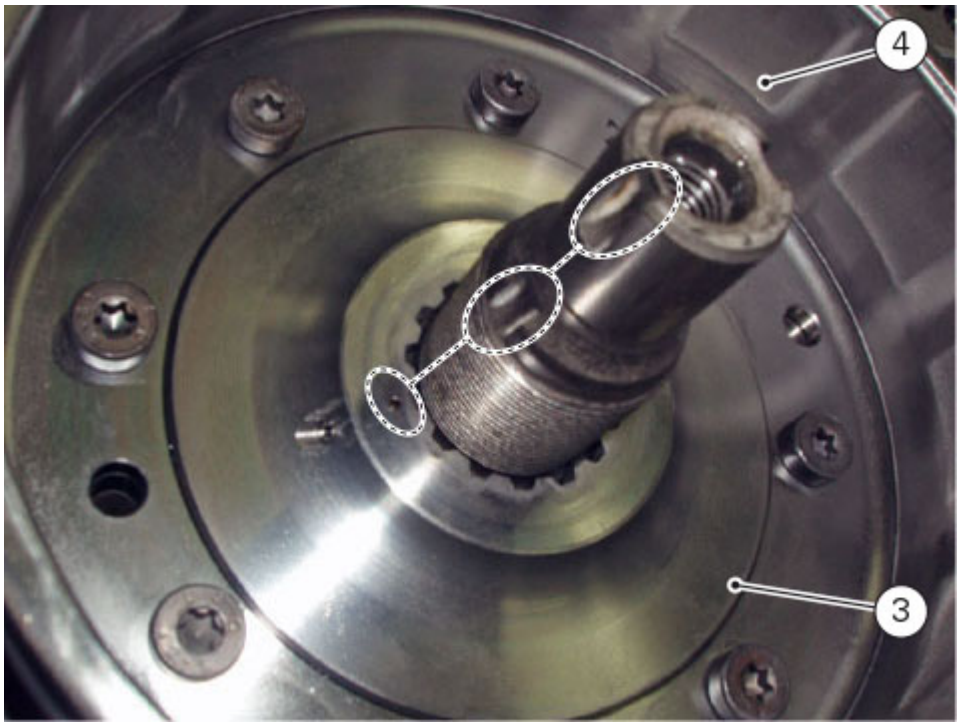

Fit the washer (2) on the end of the crankshaft.

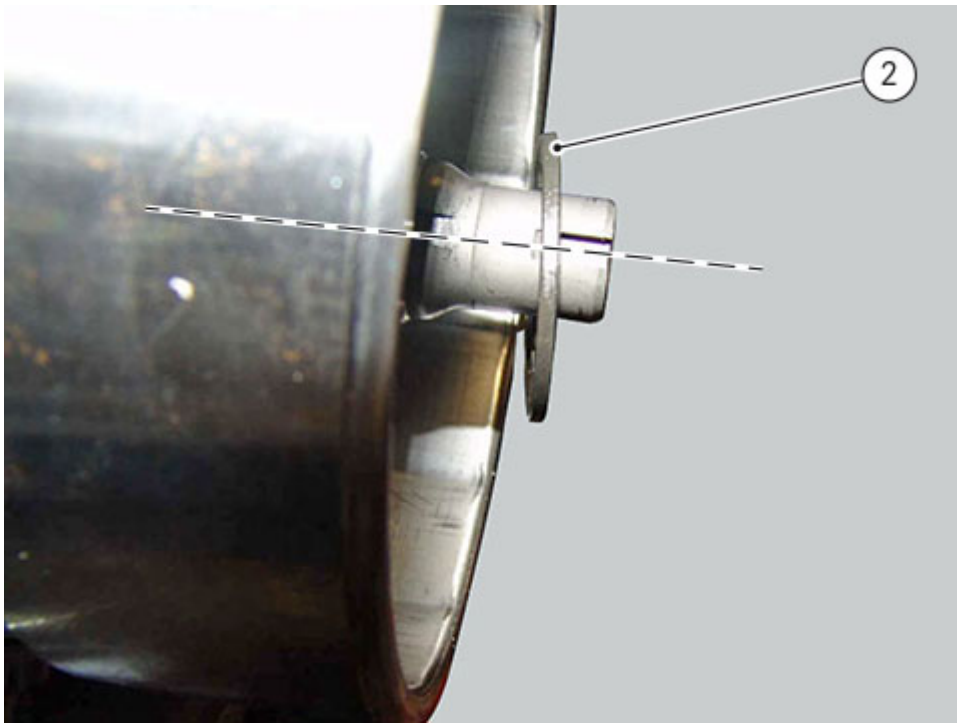

Apply the recommended threadlocker to the thread of the crankshaft and the nut (1).
Start the nut (1).
Lock the flywheel rotation with the special tool no. **88713.3367** and tighten the nut (1) to a torque of 330 Nm (Min. 313 Nm - Max. 346 Nm).

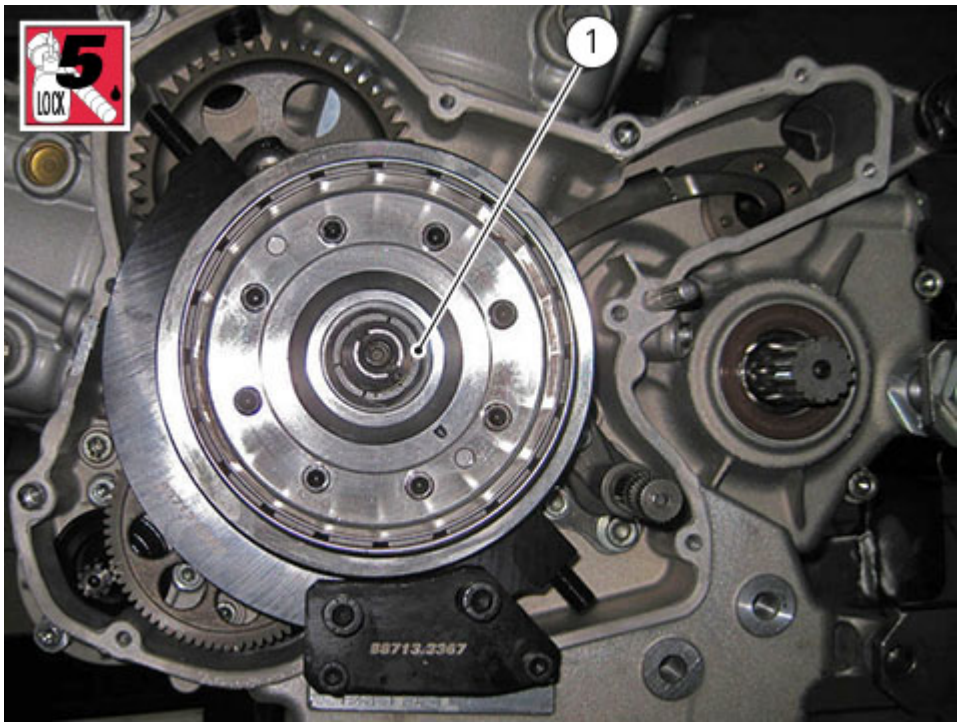
5.
LOCK
1
88713.2367

Overhauling the flywheel/generator assembly

Inspect the inner part of generator rotor (8) for signs of damage.
Check that the starter clutch is working properly and that the roller races do not show signs of wear or damage of any kind. Disassemble the unit if you find faulty operation.



Disassembling the generator flywheel

Unscrew the screws (9) and remove the generator rotor (10) from the flywheel.



Insert two of the screws (9) just removed from the rotor in order to remove the flange (11) and the starter clutch (12) from the flywheel (13).
The starter clutch is a slight interference fit on the flange. Use a suitable drift to remove it.

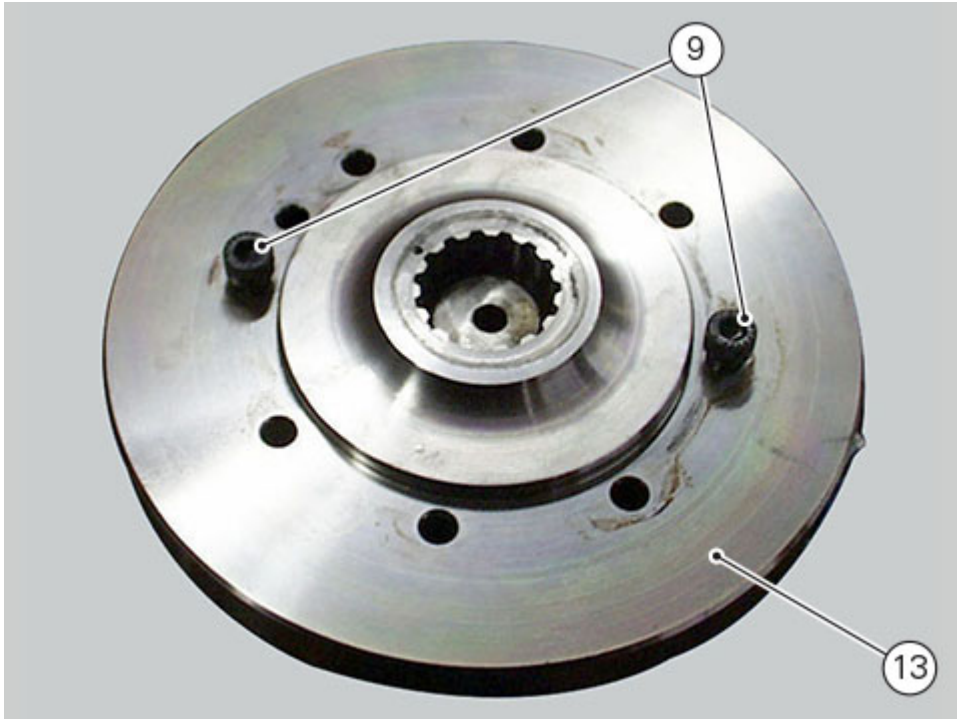

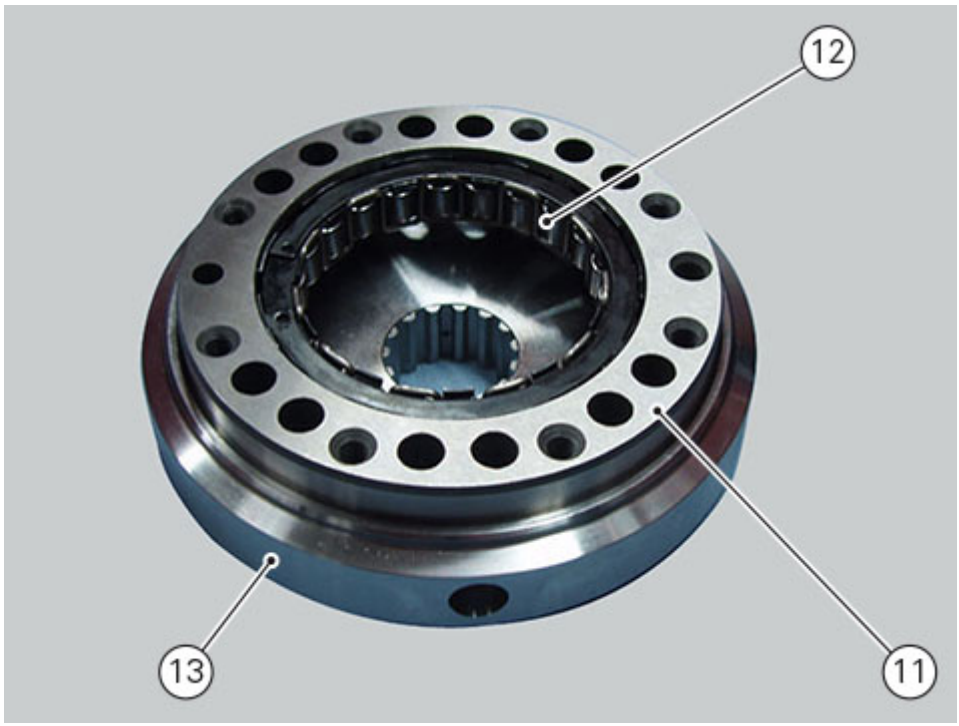

Reassembling the flywheel/generator assembly

Fit starter clutch (12) on flange (11) taking starter clutch edge (A) with chamfer (B), fully home on flange.

Important

Assemble the components (starter clutch and flange) so that the edge of the starter clutch is positioned on flange chamfered side.

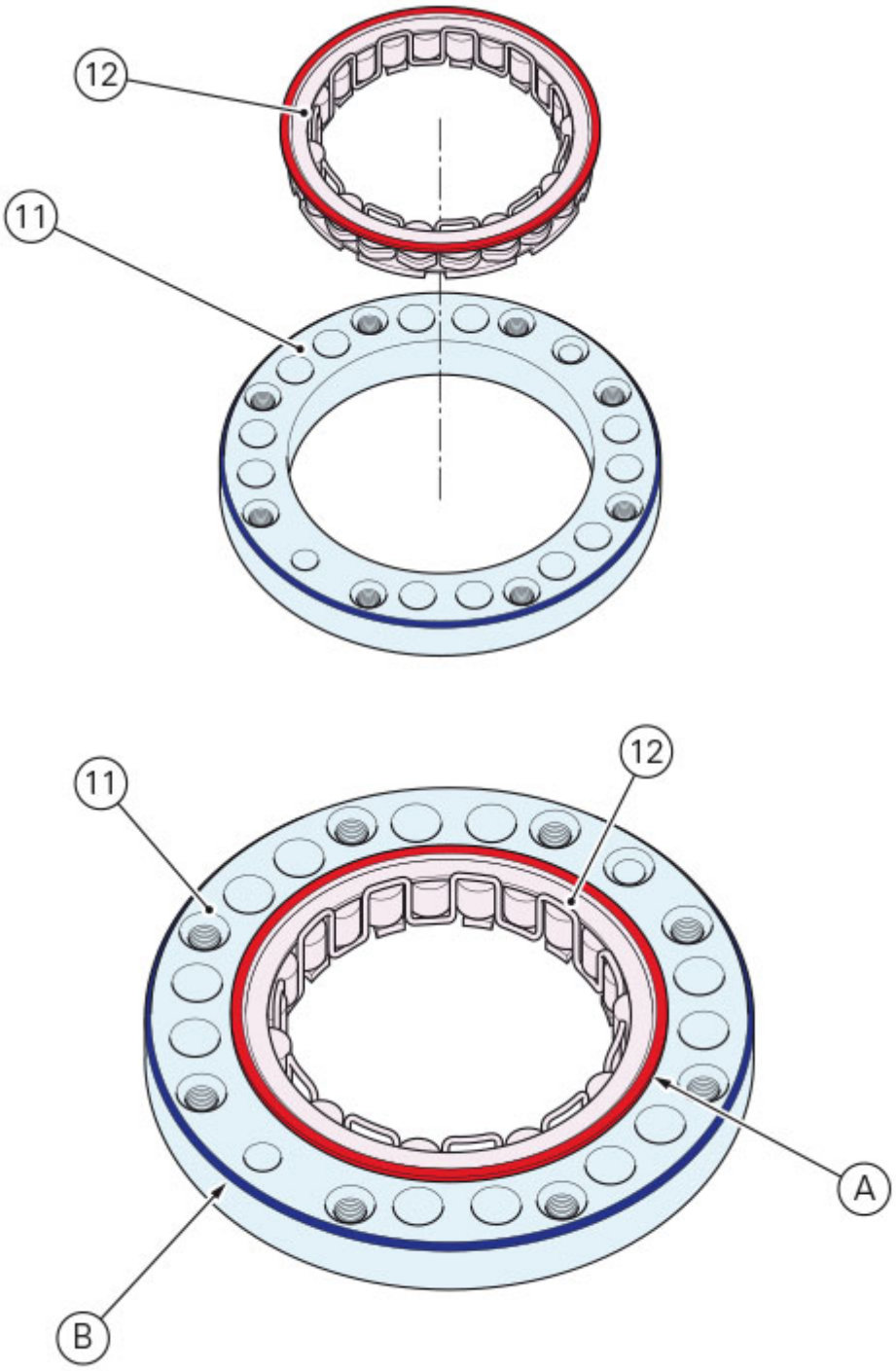

Fit the flange (11) with starter clutch (12) fully home into the flywheel (13), ensuring the centring hole (C) on flange matches the flywheel centring hole (D).
The flange centring hole (C) is the hole with the countersunk edge (E).
The centring hole (D) of the flywheel can be either one of the two holes (F).

Note
Use suitable tools to align the centring holes.

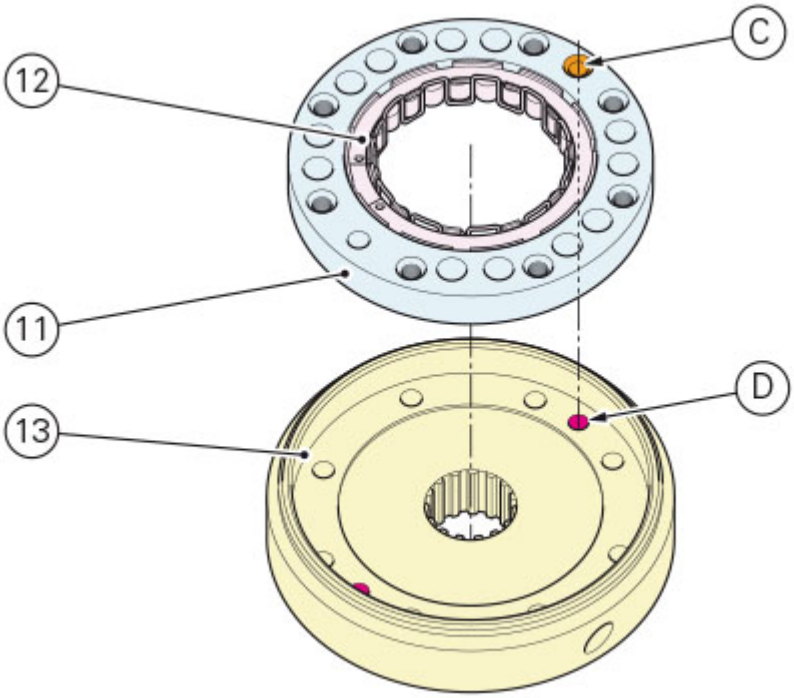
C
12
11
D
13

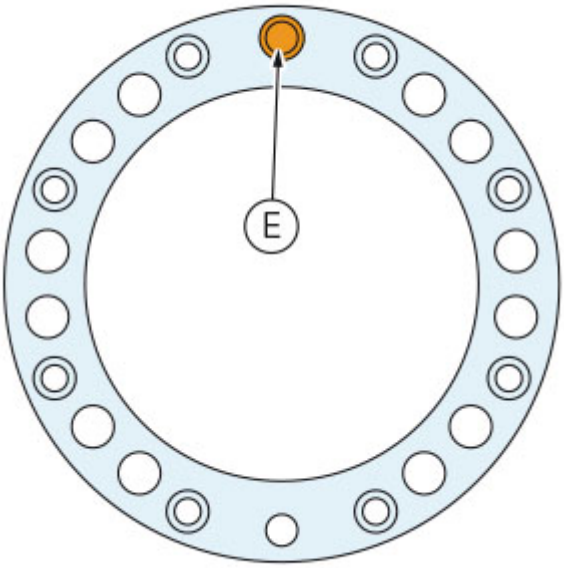
E

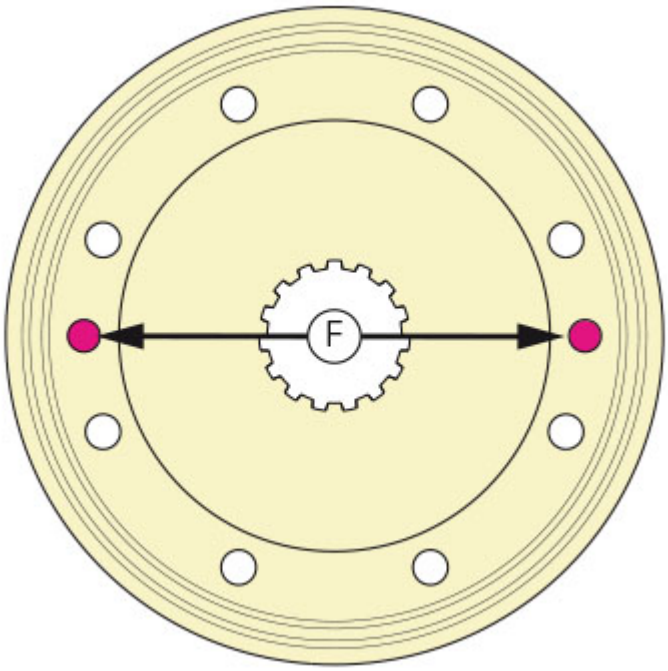

Important

Assemble the components (flange and flywheel) so that the edge of the starter clutch is enclosed between flange and flywheel.

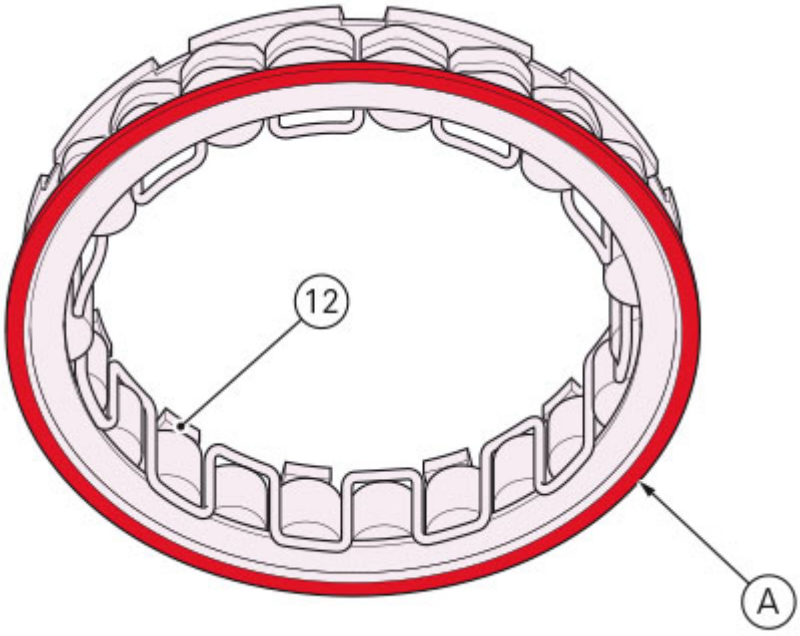

Fit rotor (10) on flywheel (13), matching one of the two flywheel centring holes (D) with the rotor centring hole (G).
The rotor centring hole (G) is the one positioned on the same diameter as the fixing holes (H).

Note

Use suitable tools to align the centring holes.

Smear some threadlocker on the rotor/flywheel retaining screws (9) and start them in their holes.

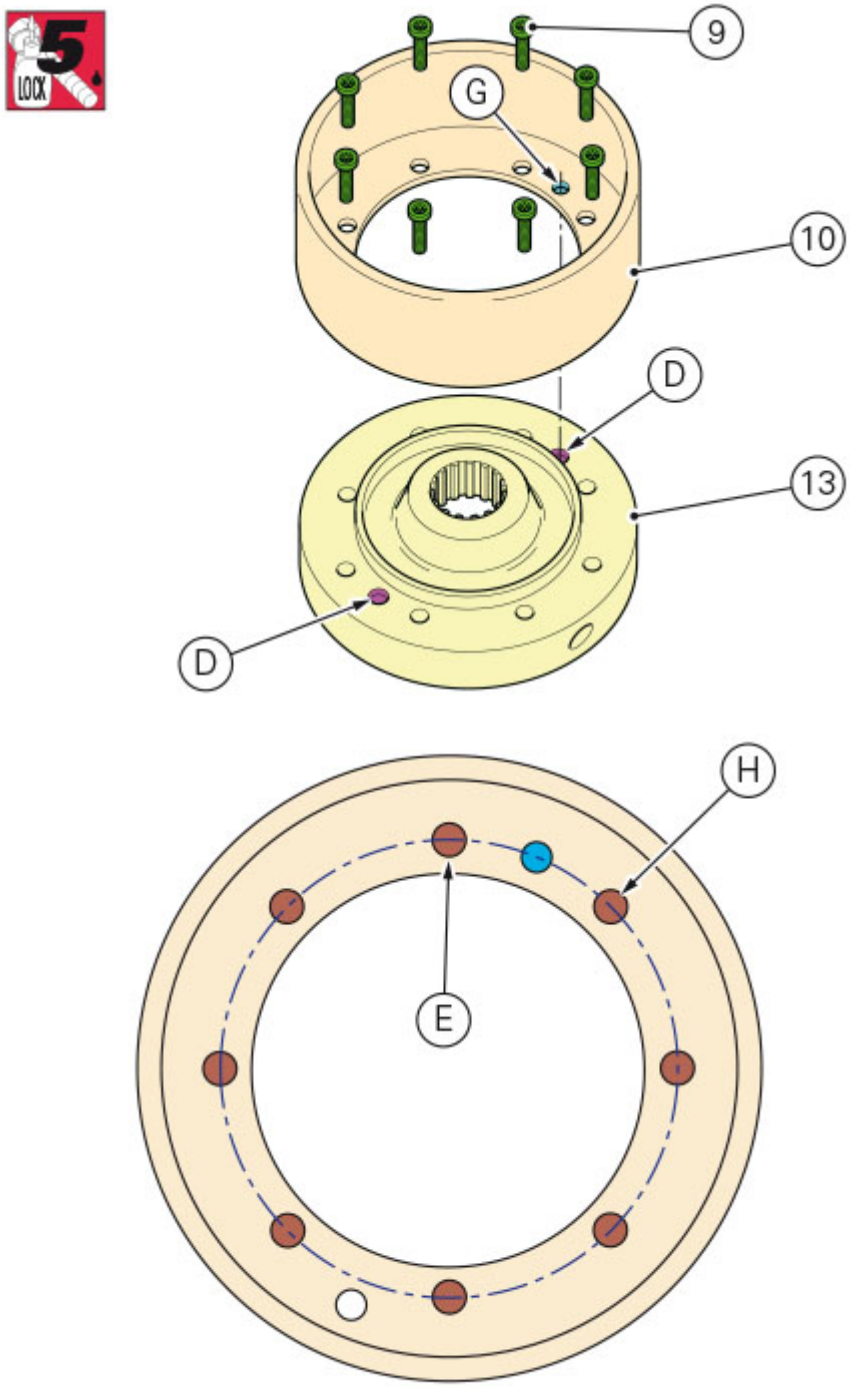

Tighten the screws (9) to a torque of 13 Nm (Min. 11 Nm - Max. 15 Nm), respecting the indicated sequence.

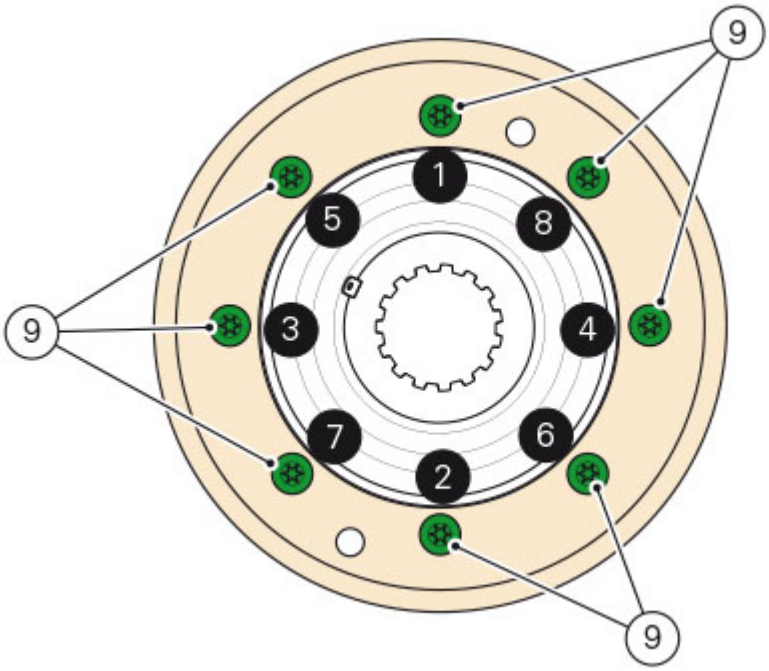

Lubricate the race (L) of the driven gear (4) with engine oil.
Fit the driven gear on the starter clutch, ensuring it is properly seated.

Note
To help insertion, turn the driven gear in the direction indicated by the green arrow.

Hold the flywheel (13) with one hand and check that the driven gear can rotate freely in the direction of the green arrow but not in the direction of the red arrow.
If either of these two conditions is not met, this means that the starter clutch has not been fitted correctly.



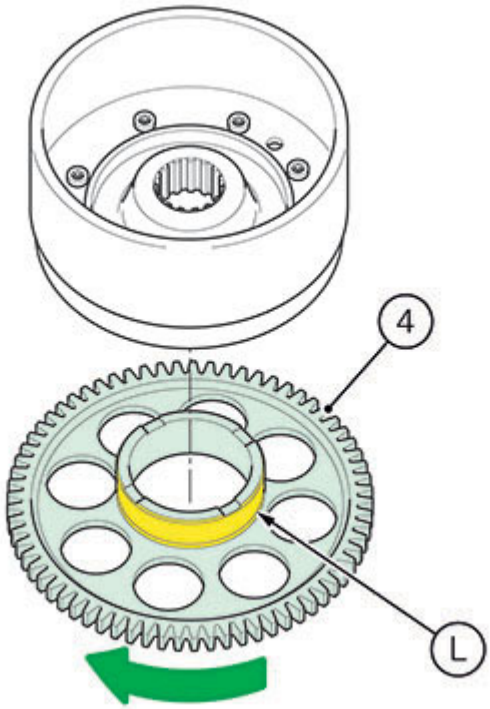

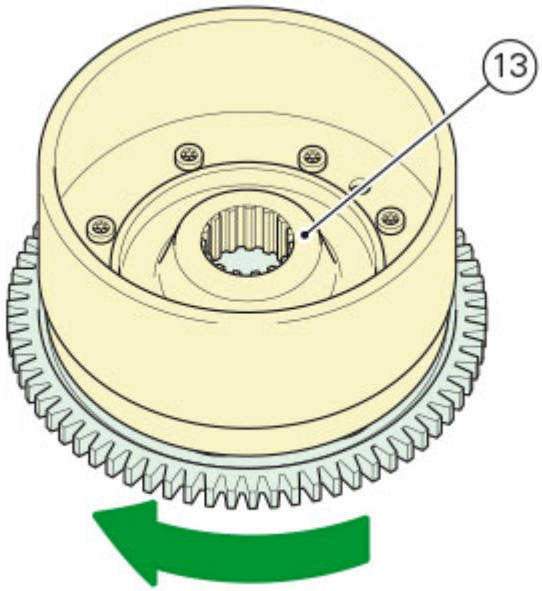
13

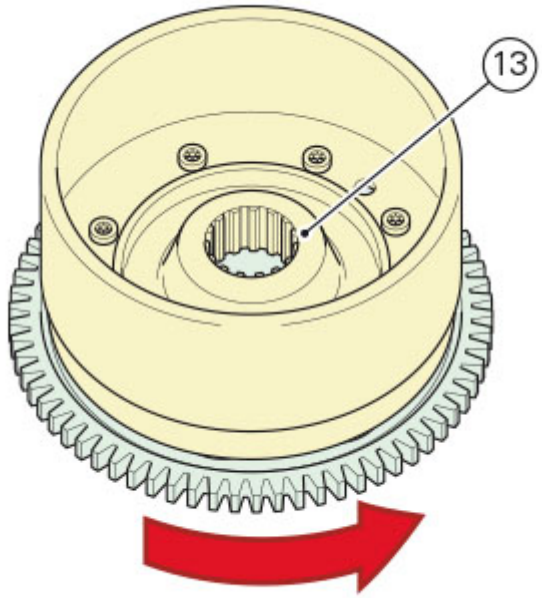
13

Removing the flywheel/generator assembly

Fix tool (A) part no. **88713.3367** to the mounting holes M10 (B) of side stand.
Secure the tool to the flywheel with the screws (C). Unscrew the generator-flywheel retaining nut (1).

Warning

While unscrewing the nut, apply axial pressure to the socket to avoid damage or injury in the event of the wrench suddenly slipping off the nut.

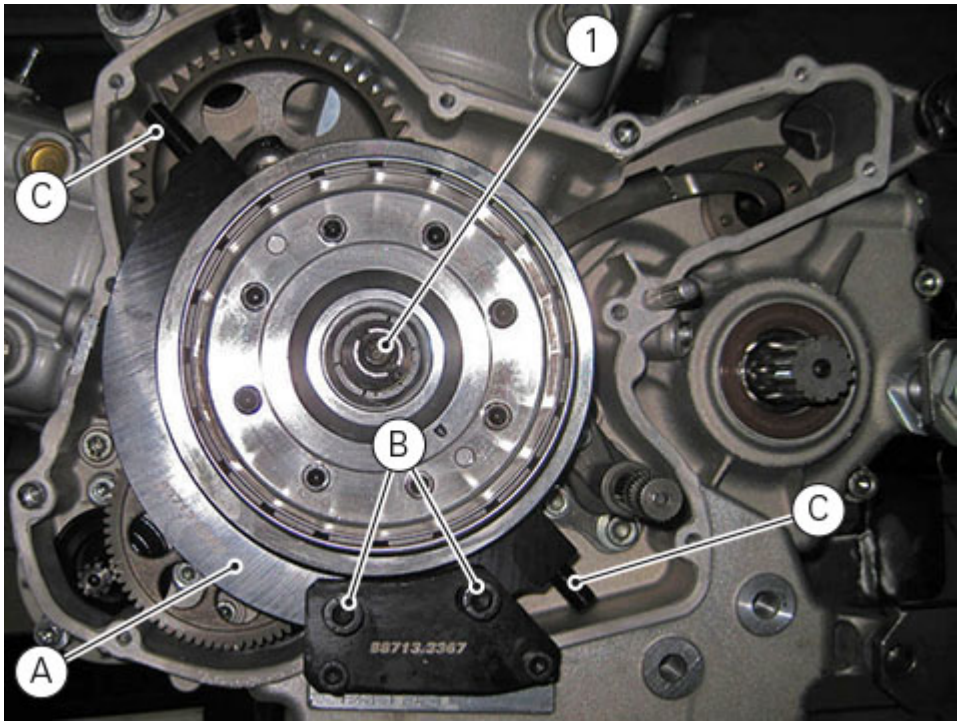

Remove the nut (1), the washer (2) and the flywheel assembly (3) with the driven gear (4) from the crankshaft.

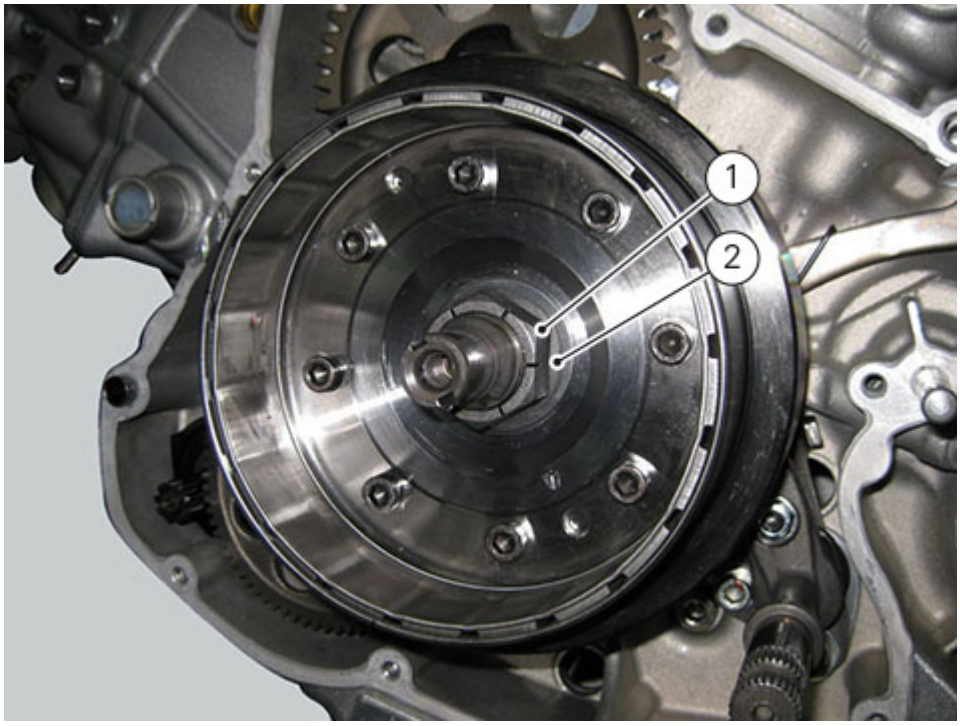

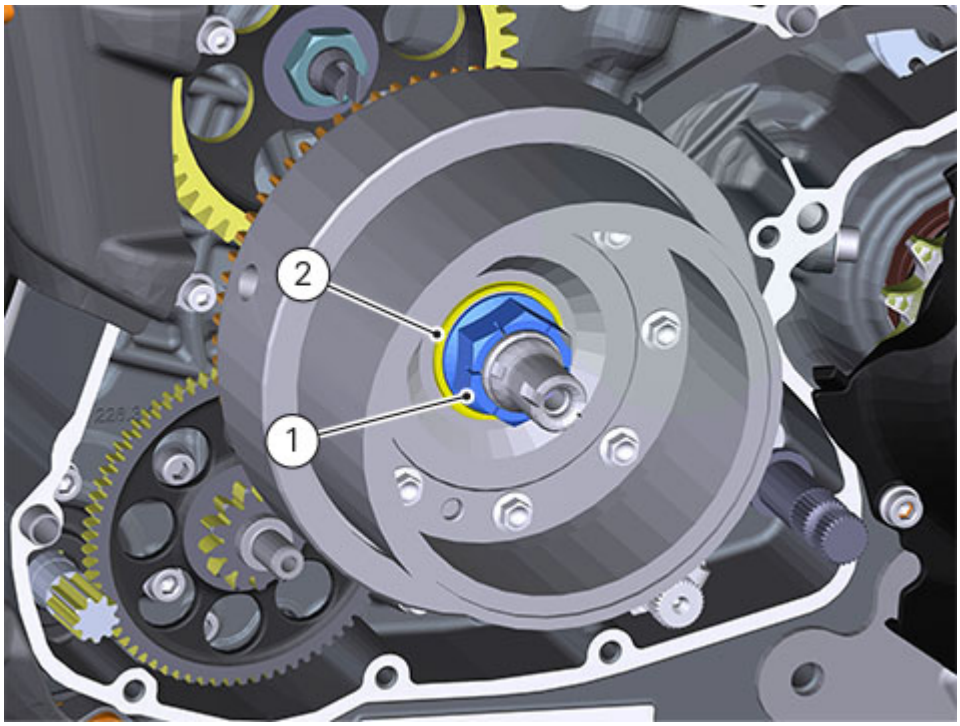

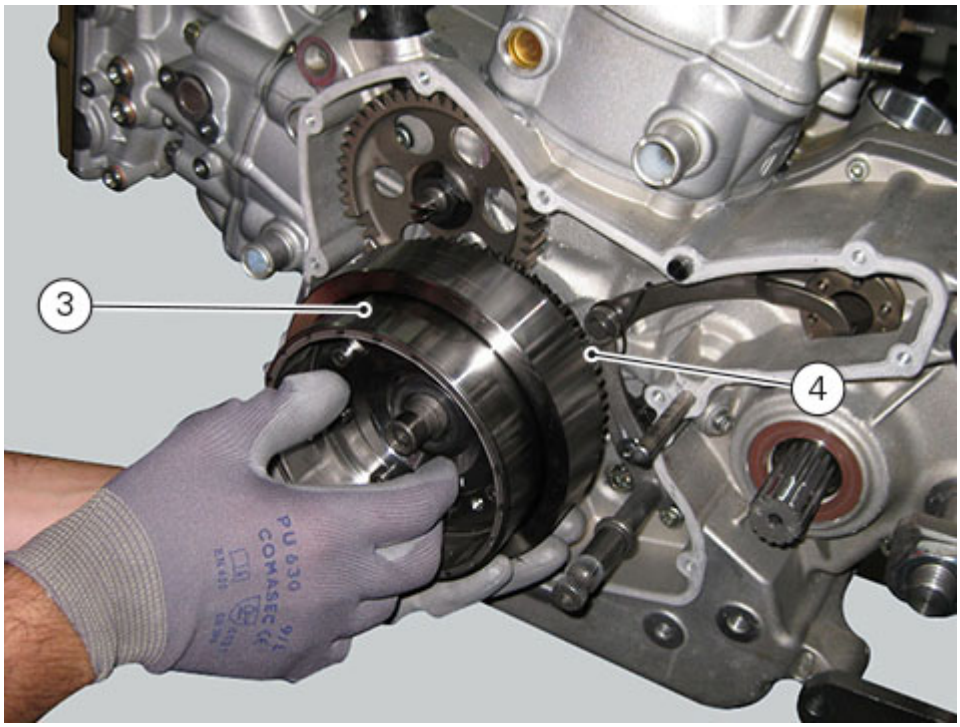

Remove the bushing (5), the needle roller bearing cage (6) and the washer (7).

Check the bushing (5), the needle roller bearing cage (6) and the washer (7) for wear. Replace if worn.

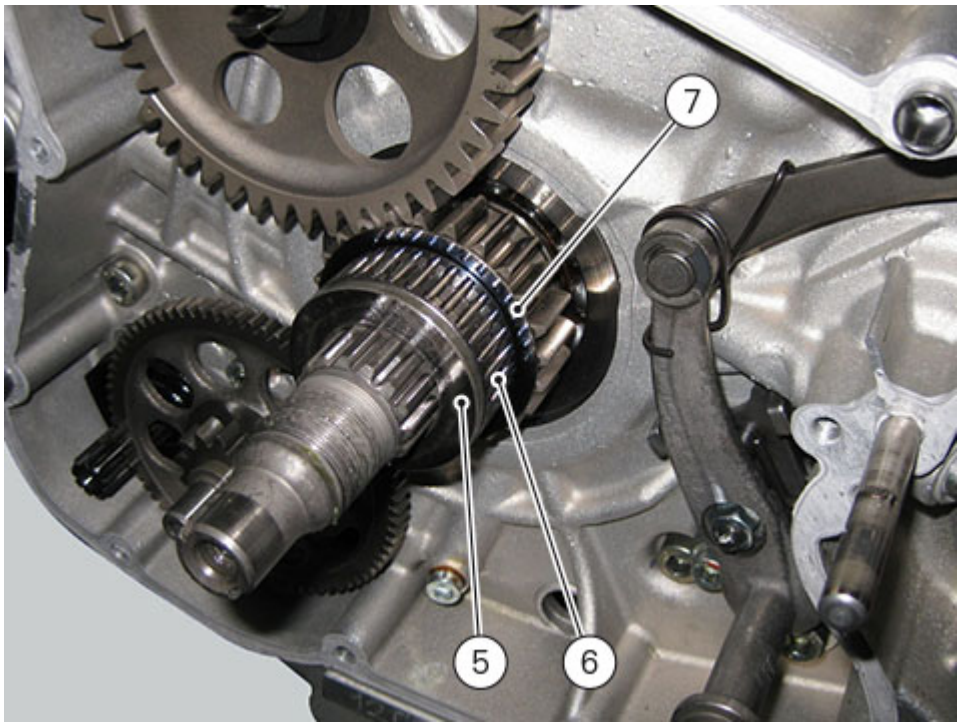
7
5
6

Disassembling the generator cover

Undo the three stator (8) retaining screws (7) and the retaining screws (9) of the cable guide bracket (4) from inside the generator cover (5).
Remove the stator (8) and the cable guide bracket (4).

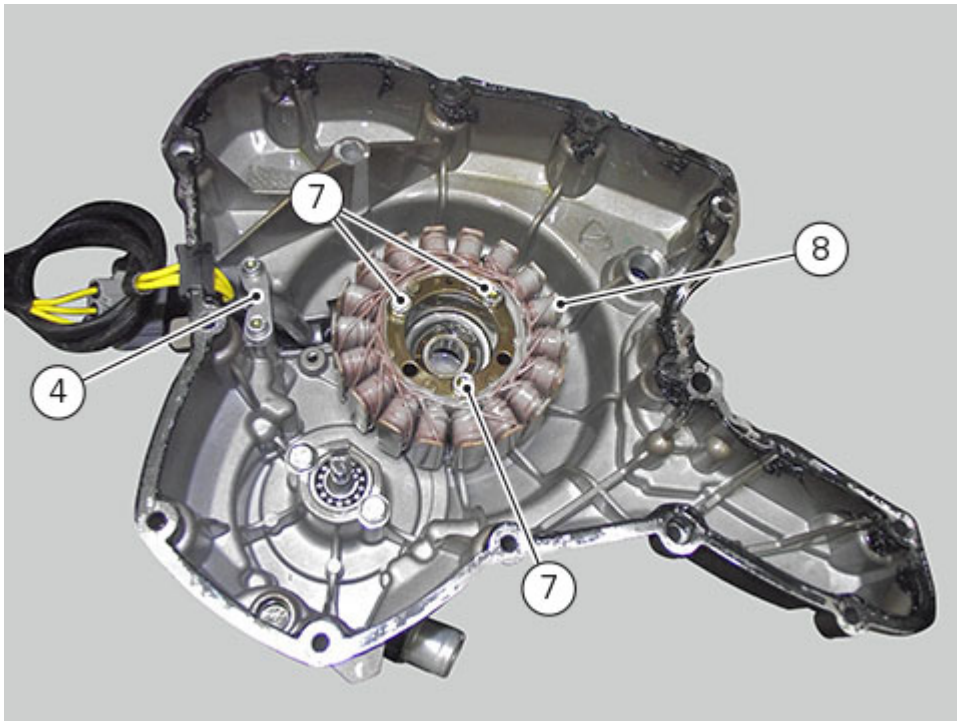

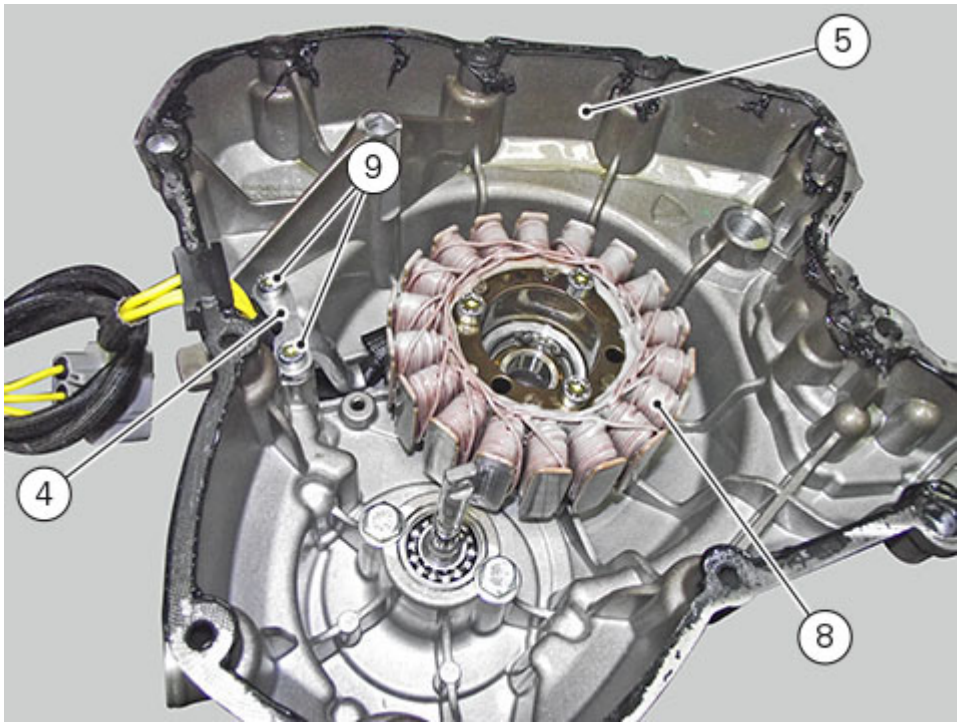

The generator cover is fitted with a bearing (11), held in place by the circlip (12), which is located on the end of the crankshaft.
Remove the circlip (12) with suitable pliers.
Remove the bearing (11) using a universal puller.
Be careful when fitting the new bearing (11) to ensure it is positioned with the shielded side facing away from the cover.
Secure the bearing with the circlip (12), ensuring that it is correctly fitted in its seat in the generator cover (5).

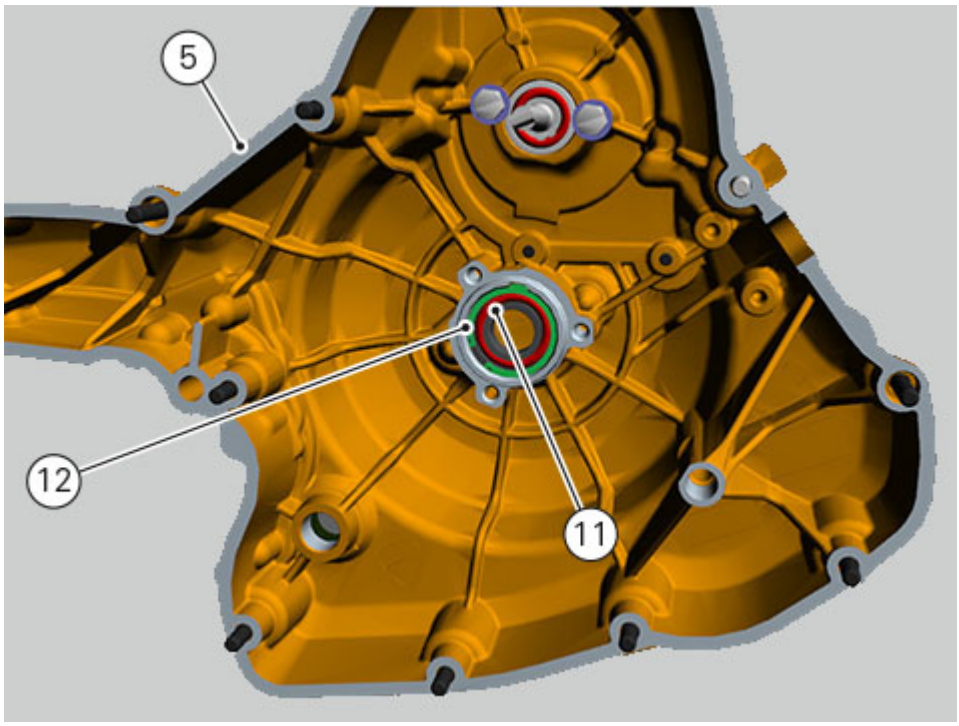
5
12
11

Removing the generator cover

Drain the coolant (Changing the coolant).
Remove the front sprocket cover (Removing the front sprocket cover).
Drain the engine oil (Changing the engine oil and filter cartridge).
Remove the clutch slave cylinder (Removing the clutch slave cylinder).
Remove the gear shift (Removing the gear shift).
Disconnect the water pump hoses (Removing the water pump).

Note
This operation is described for an engine removed from the frame since all reassembly procedures are easier with the engine on the bench.

Disconnect the generator cable connector from the main wiring (A).

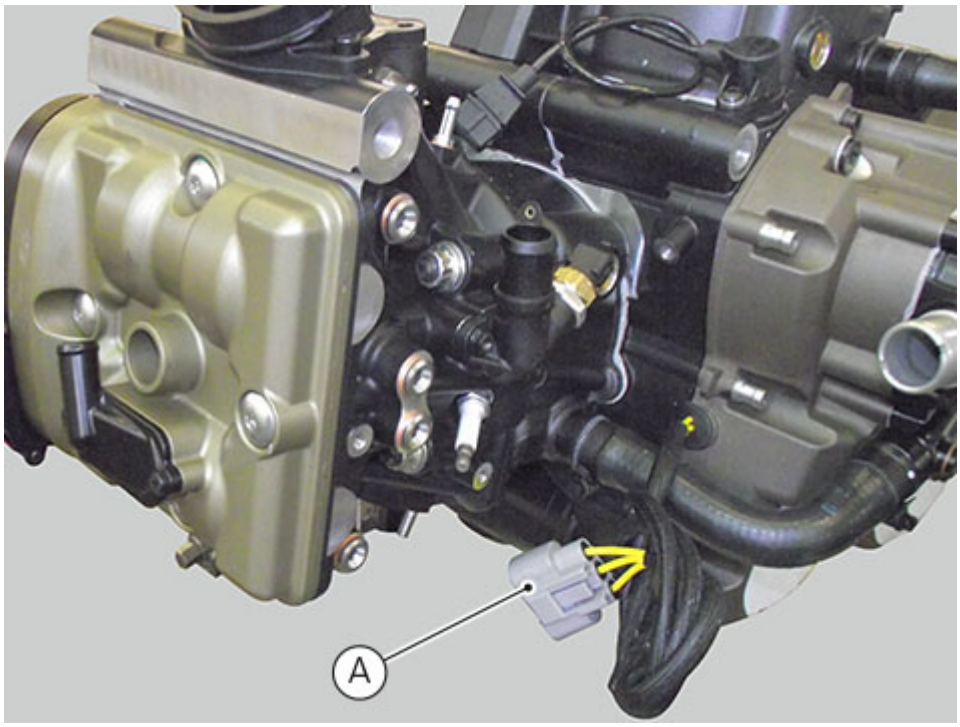

Undo the two retaining screws (1) of the centre cap (2) over the end of the crankshaft and collect gasket (18).

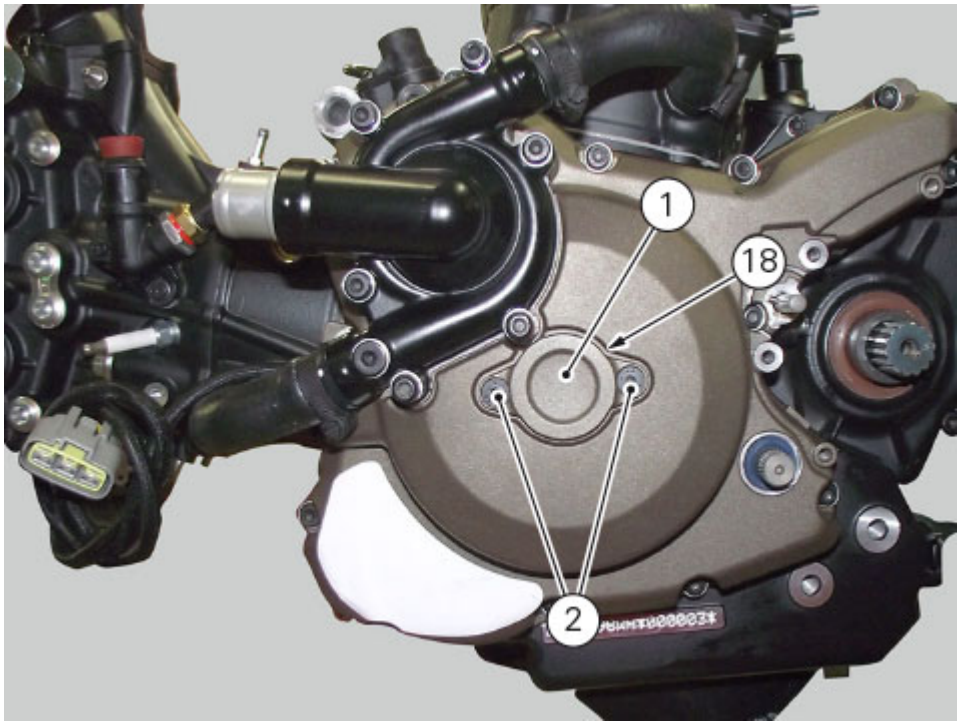

Loosen the fastening screws (3), and (4) on the generator cover (5).

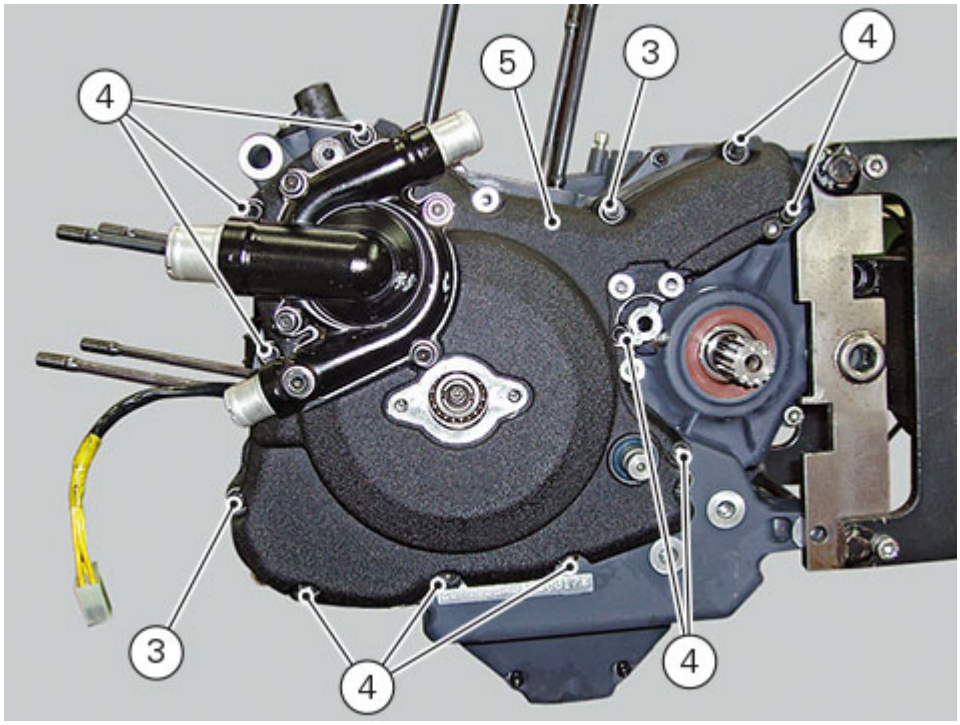

Fix service tool no. **88713.1749** to the holes (B) left vacant by the screws (1) you have just removed.
Turn the tool shaft slowly to separate the cover (5) from the LH crankcase half.

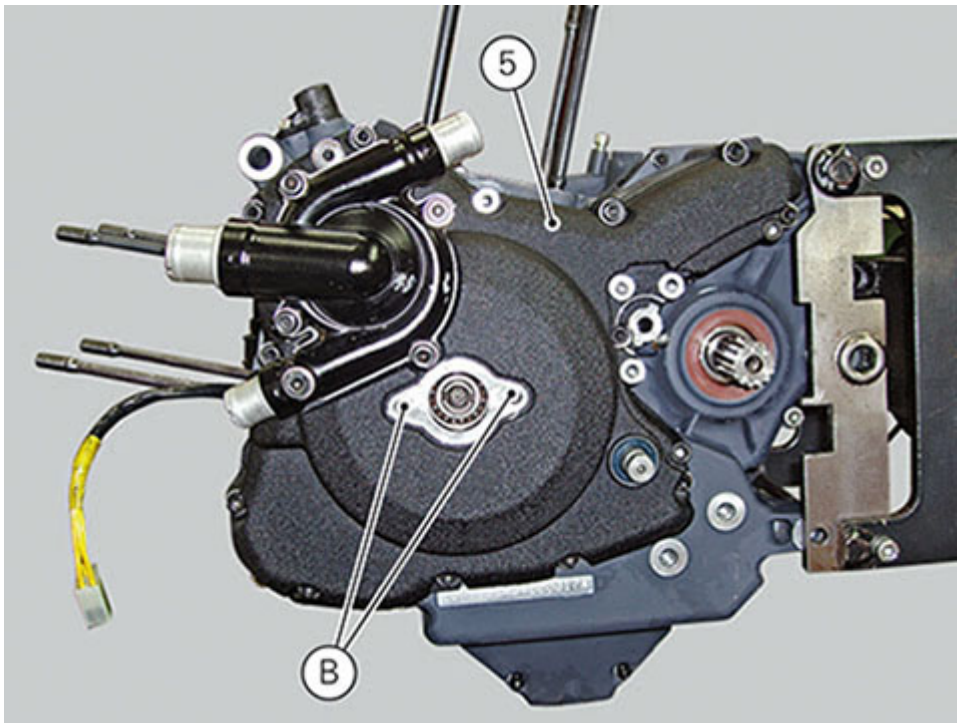

There is a sealing ring (6) on the cover (5) at the gearchange lever shaft that may be damaged when removing the generator cover.
Always check the condition of this sealing ring and replace it if damaged.

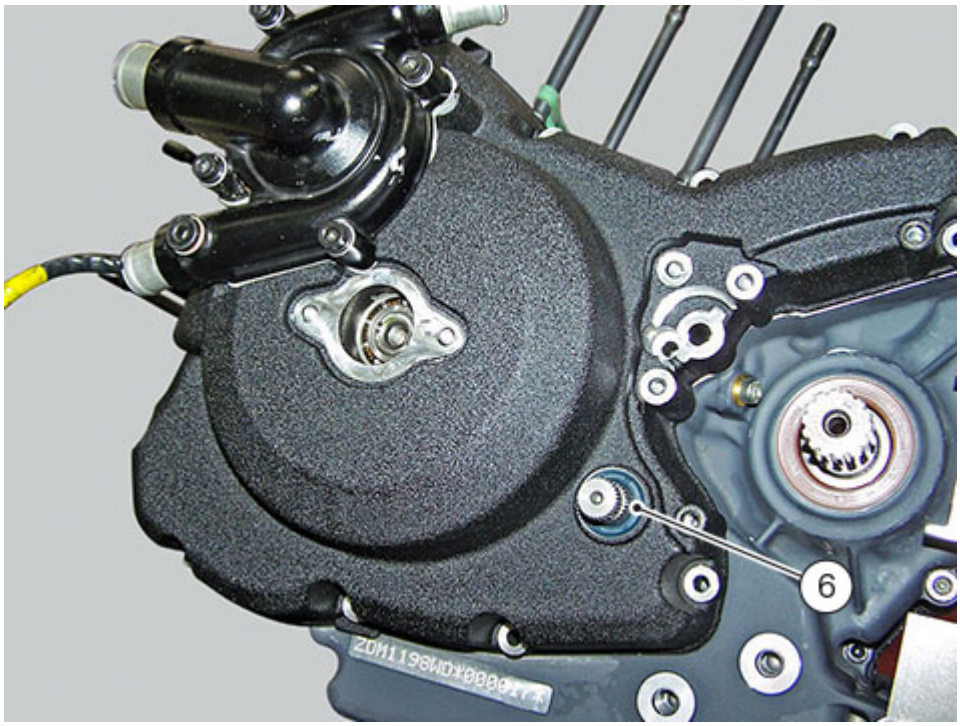
6

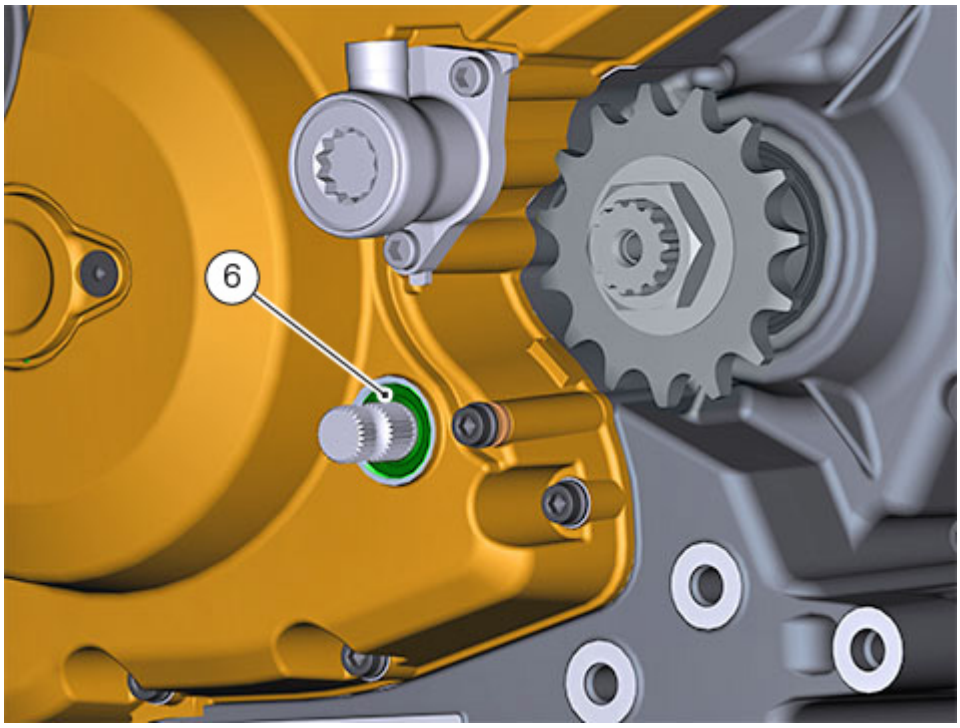
6

Refitting the starter motor

Visually check the conditions of starter motor (3) gasket (9) and replace it if necessary.

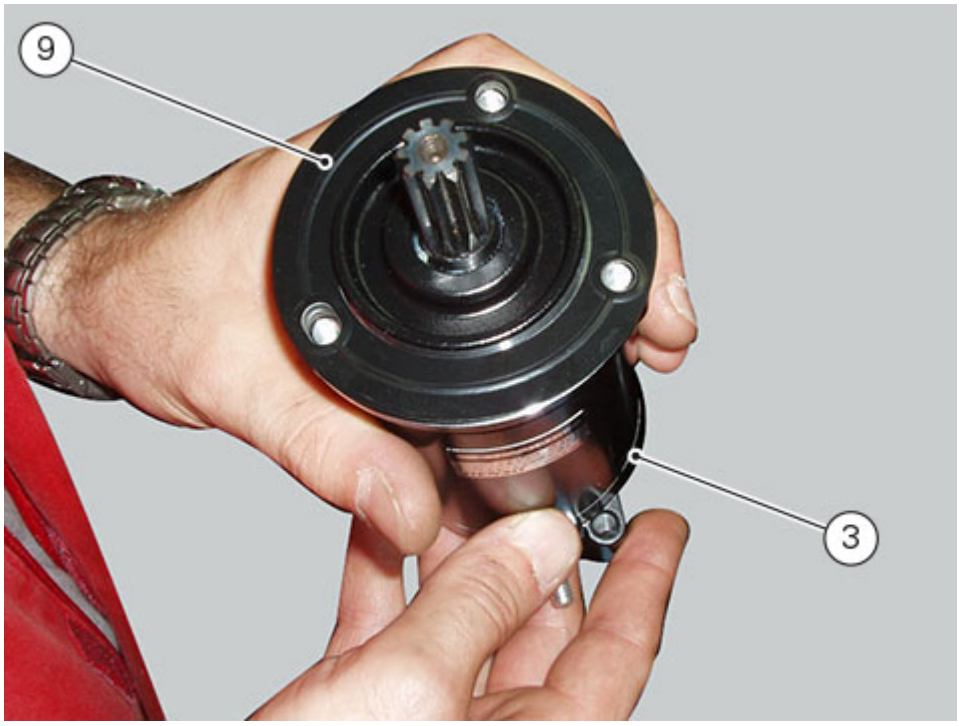

Position the gasket (9) and the starter motor (3) on the crankcase.
Start the two screws (4) and (5) on the generator side with pre-applied specified threadlocker (if screws are replaced with same new ones).

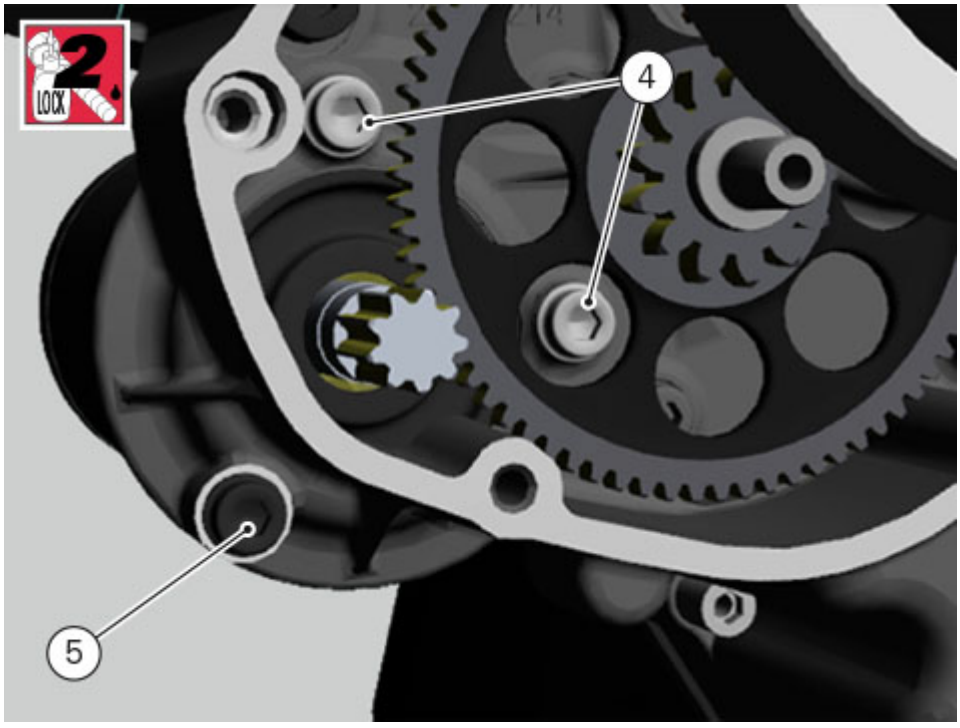

Position the silent-block (7).
Start screw (6) with pre-applied specified threadlocker.

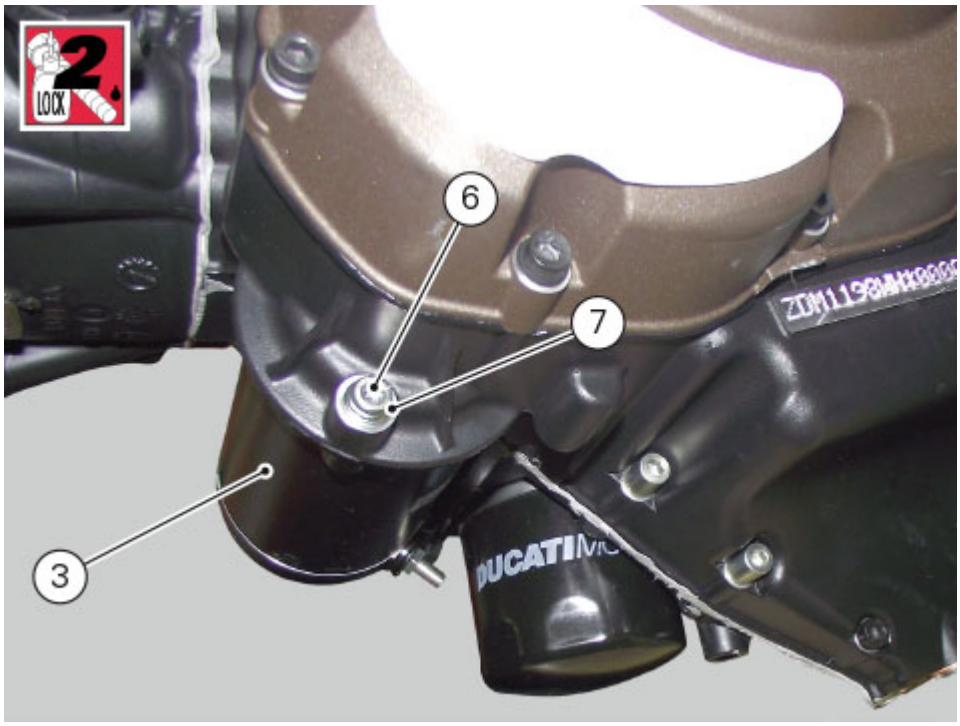

Tighten the screws (4), (5) and (6) to a torque of 10 Nm (Min. 9 Nm - Max. 11 Nm)
Place starter motor/solenoid starter cable (2) and tighten cable retaining nut (1) to a torque of 5 Nm ± 10%.

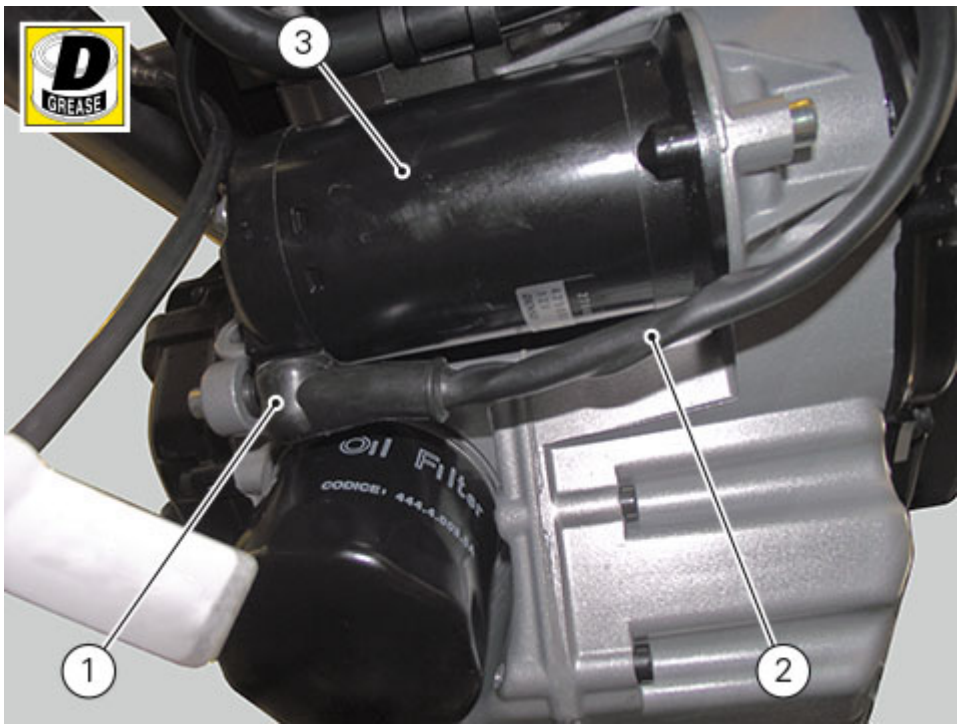

Refit the Canister filter (Refitting the Canister filter).
Refit the generator cover (Fitting the generator cover).
Connect the water pump hoses (Refitting the water pump).
Remove the gear shift (Refitting the gear shift).
Remove the clutch slave cylinder (Refitting the clutch slave cylinder).
Fill with engine oil (Changing the engine oil and filter cartridge).
Remove the front sprocket cover (Refitting the front sprocket).
Fill the cooling system (Changing the coolant).

Removing the starter motor

Drain the coolant (Changing the coolant).
Remove the front sprocket cover (Removing the front sprocket cover).
Drain the engine oil (Changing the engine oil and filter cartridge).
Remove the clutch slave cylinder (Removing the clutch slave cylinder).
Remove the gear shift (Removing the gear shift).
Disconnect the water pump hoses (Removing the water pump).
Remove the generator cover (Removing the generator cover).
Remove the canister filter (Removing the canister filter).

Remove cap (1) of starter motor cable (3).
Loosen the screw and remove cable (2).

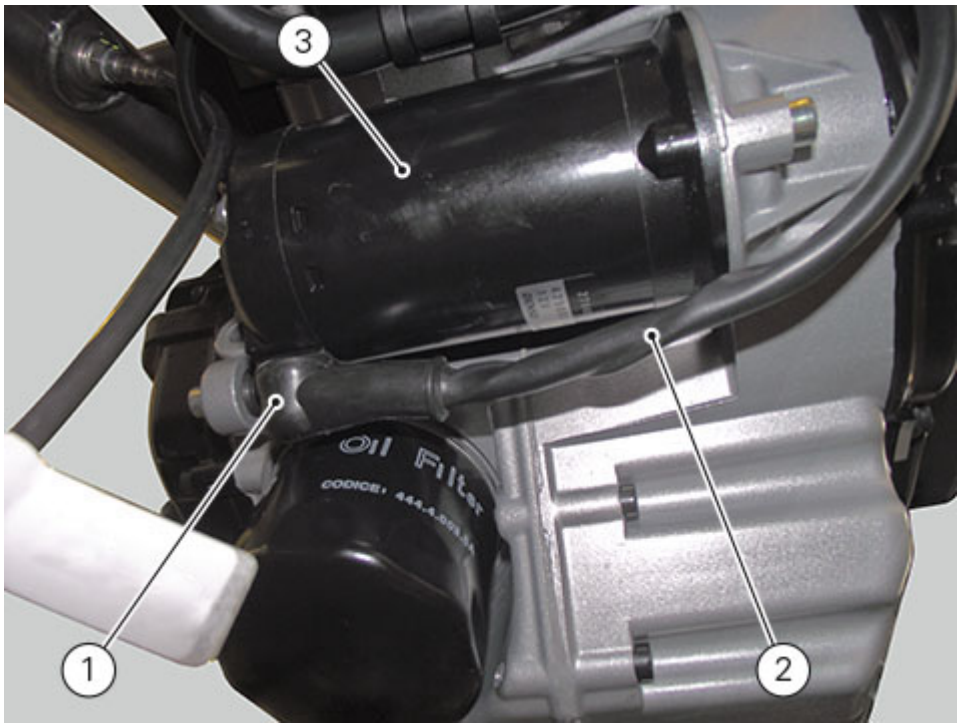

Working on the generator side, loosen the two internal screws (4) and screw (5).

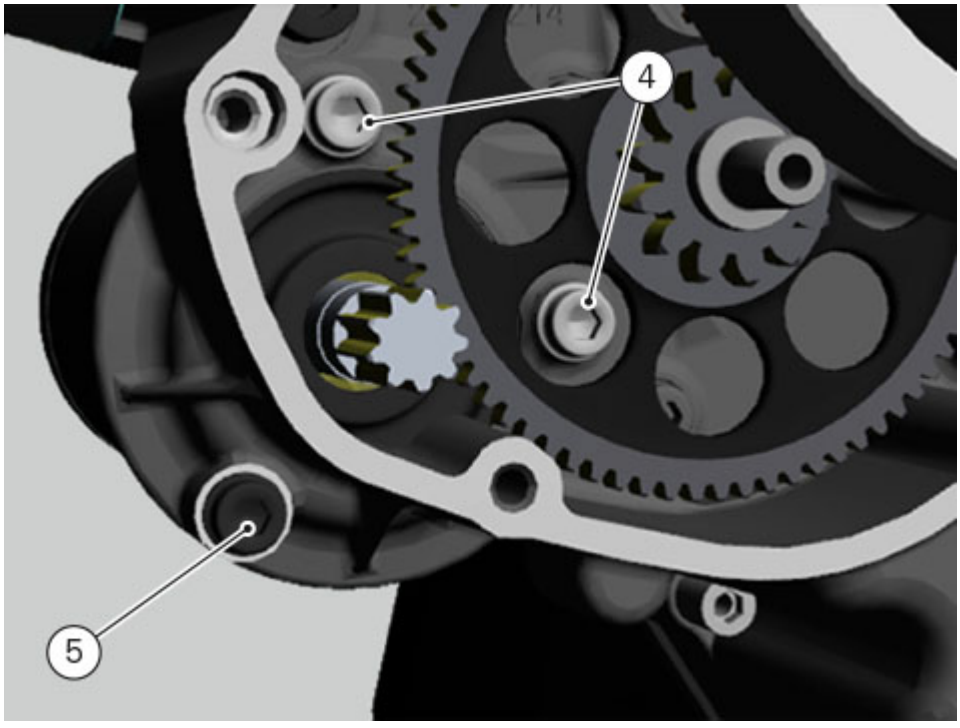

Work on the clutch side to loosen screw (6) and remove the silent-block (7).
Slide starter motor (3) out.

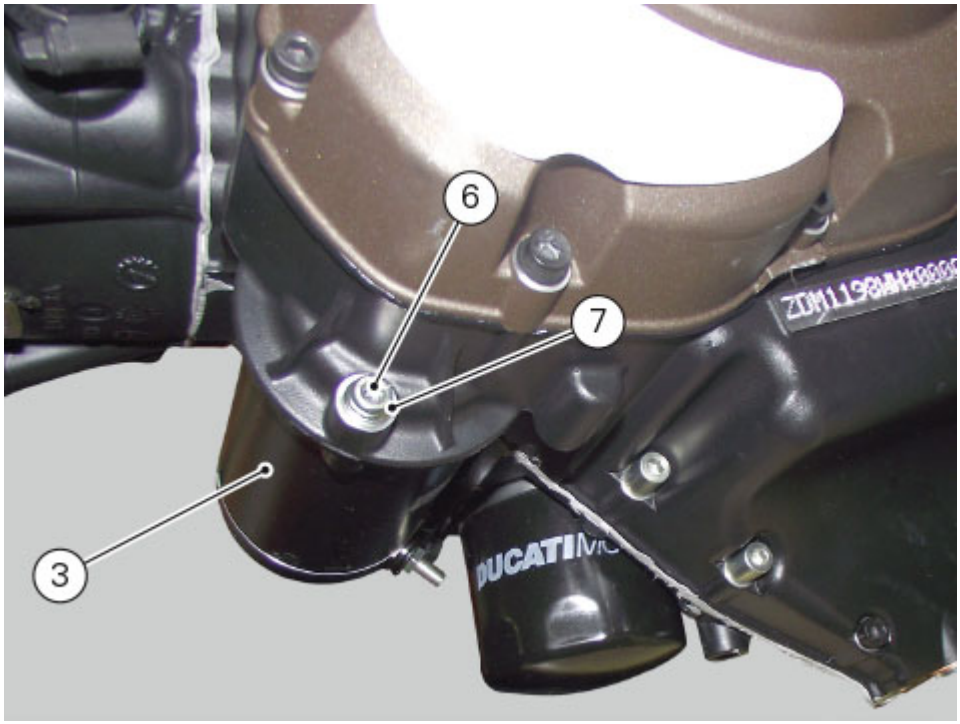
6
7
3

Refitting the starter motor gear

Position the washer (3) and the gear (2) on the pin (1) and drive it fully home on the crankcase half.

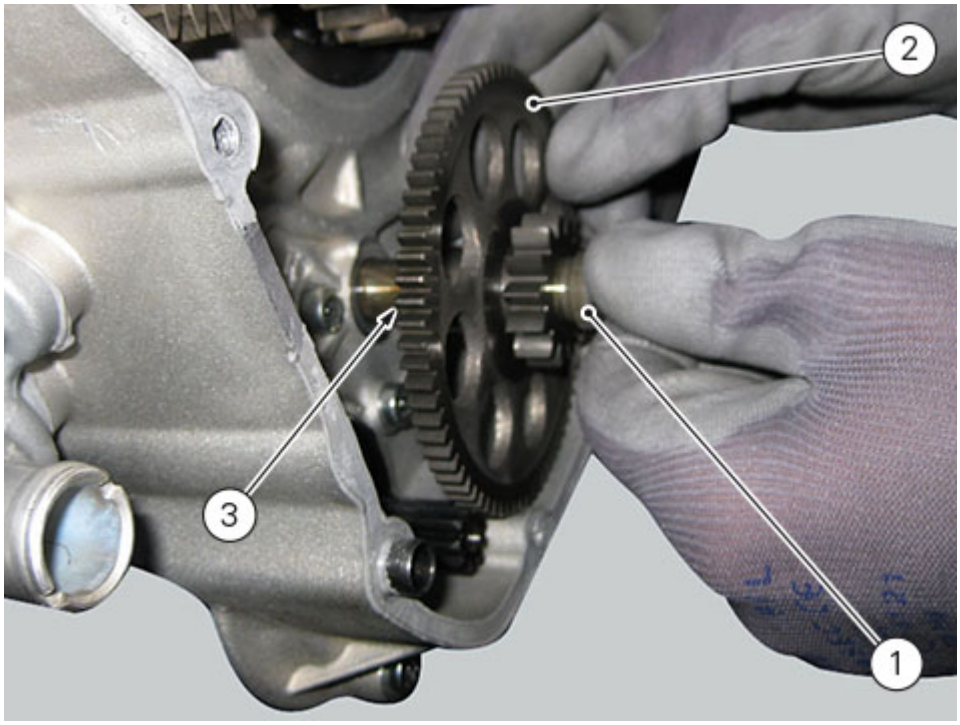

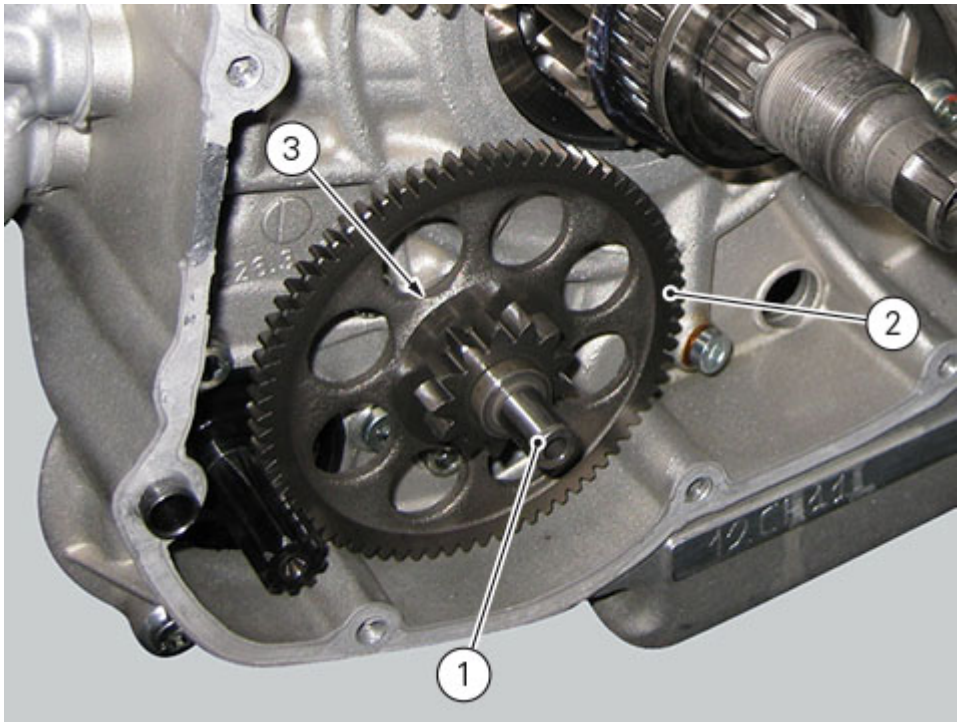

Refit the flywheel/generator assembly and the generator cover (Refitting the flywheel/generator assembly).
Refit the pump-water radiator hose (Refitting cooling system hoses and unions).
Refit the pump-cylinder hoses (Refitting the cylinder/piston assembly).
Refill the cooling system (Changing the coolant).
Refit the clutch slave cylinder (Refitting the clutch slave cylinder).
Refit the front sprocket cover (Refitting the front sprocket cover).
Fill the system with engine oil (Changing the engine oil and filter cartridge).

Removing the starter motor idler gear

Drain the engine oil (Changing the engine oil and filter cartridge).
Remove the front sprocket cover (Removing the front sprocket cover).
Remove the clutch slave cylinder (Removing the clutch slave cylinder).
Drain the coolant (Changing the coolant).
Remove the pump-cylinder hoses (Removing the cylinder/piston assembly).
Remove the pump-water radiator hose (Removing cooling system hoses and unions).
Remove the generator cover and flywheel-generator assembly (Removing generator cover).

Slide out the transmission pin (1) with gear (2) and washer (3).

Warning
Be careful when performing this operation since the washer could fall inside the crankcase halves.

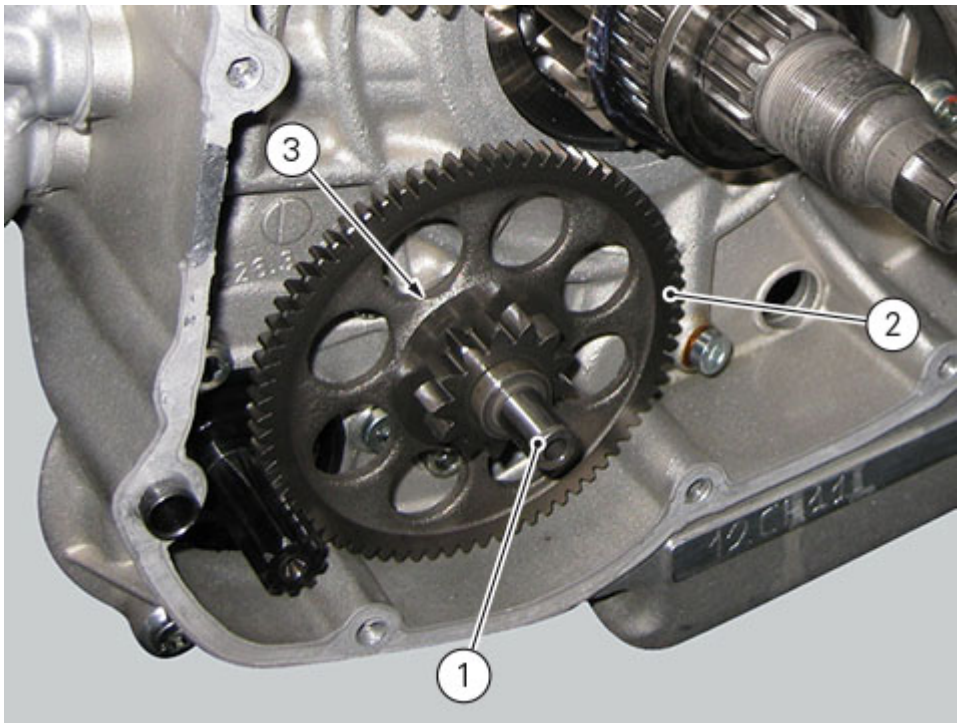

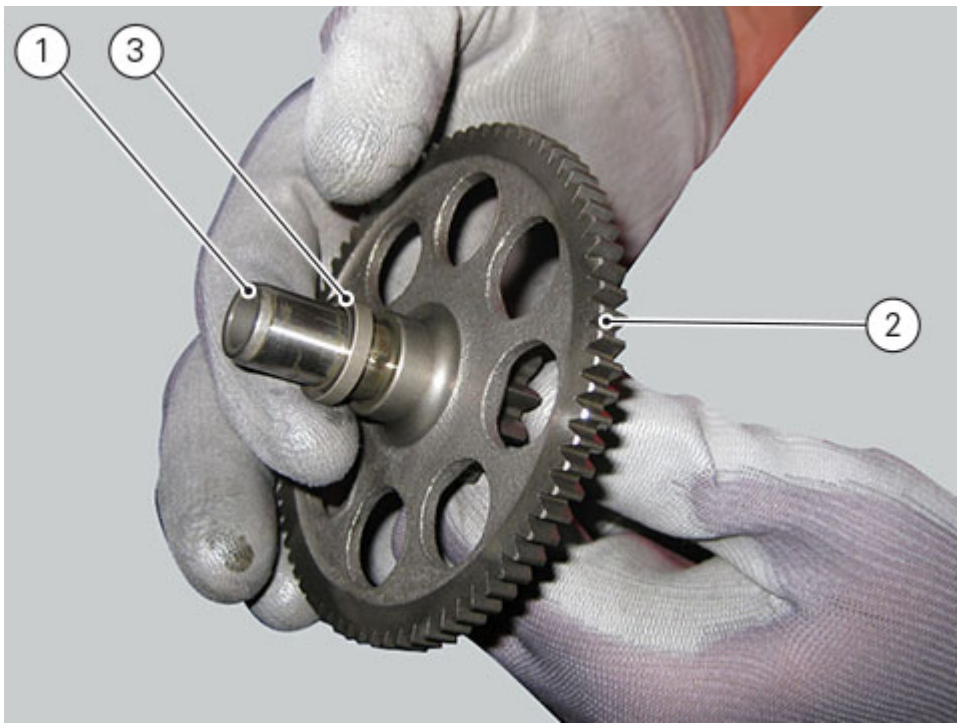

At this point, it is possible to remove the starter motor as described in chapter "Removing the starter motor".

Refitting the timing gears

Before reassembling the removed parts, check timing gears (6) for wear. Change, if necessary.

Important
The timing gears must always be replaced as a pair.

Refitting is the reverse of removal.

Make sure that spacer (7) is positioned under gear (A).

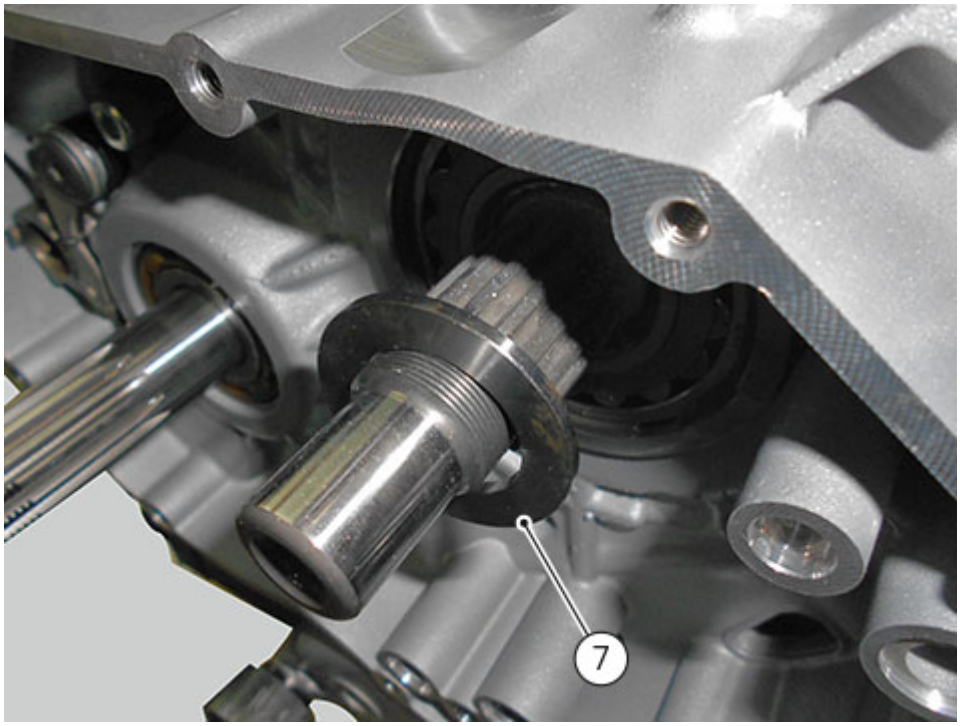

When introducing the driven gear (B) check that the key (5) is correctly fitted on the timing layshaft, align the gear slot with the key matching the driving gear timing mark (A) with the gear (B).

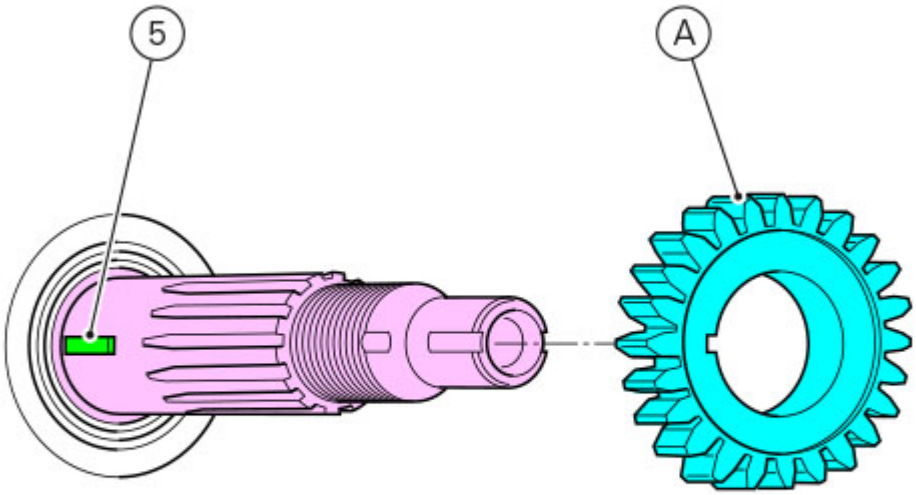

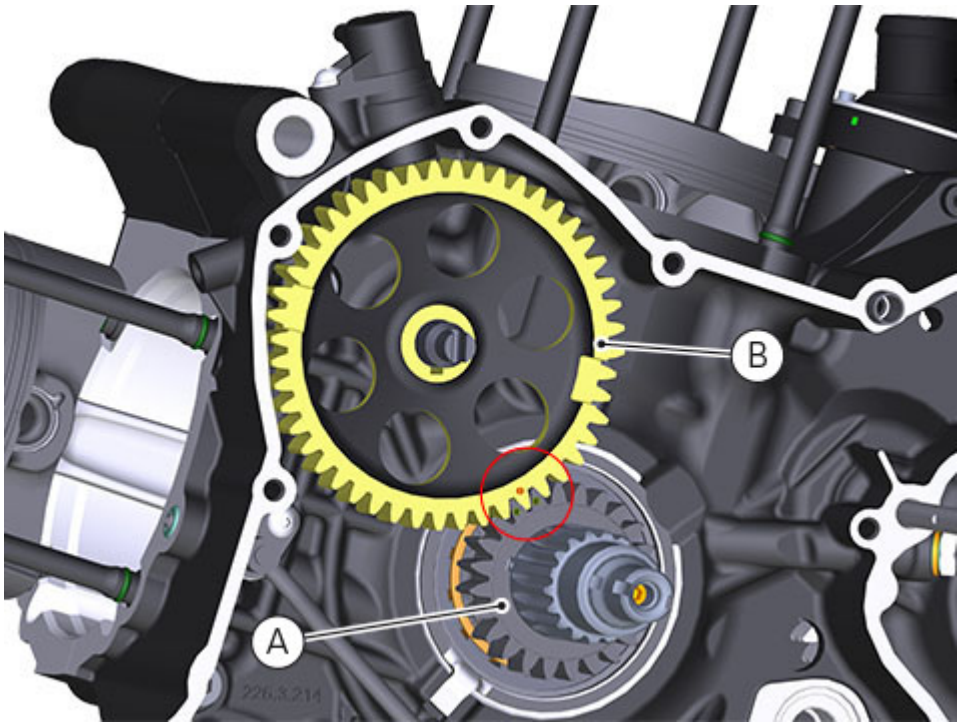

On completion of the refitting operations, check that washer (3) is staked against nut (4) in such a way to prevent the nut from working loose.

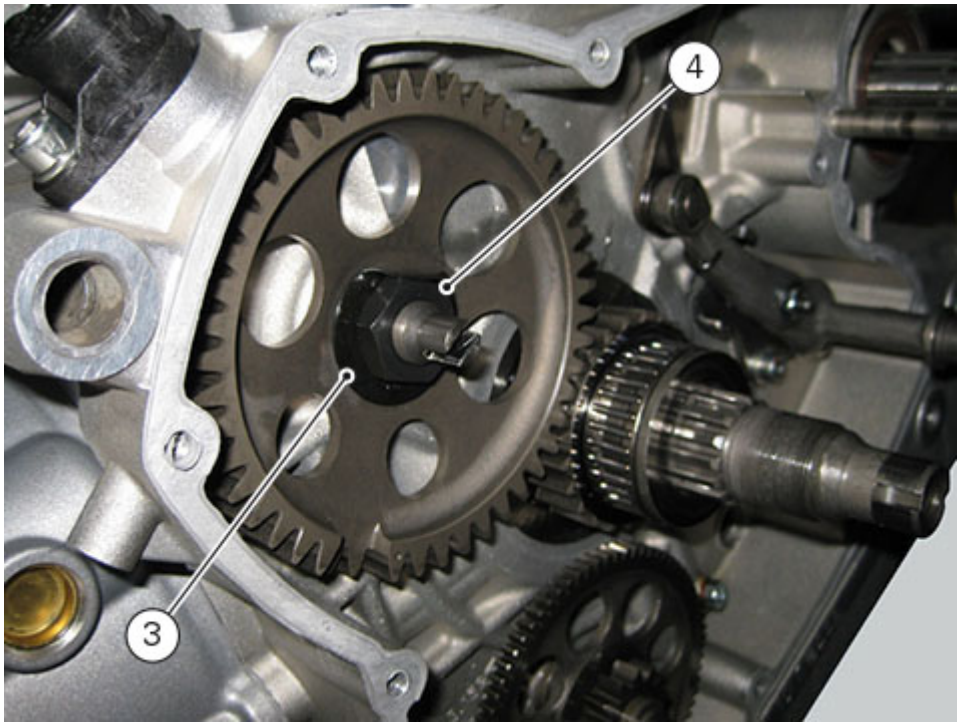

Refit the flywheel/generator assembly and the generator cover (Refitting the flywheel/generator assembly).
Refit the pump-water radiator hose (Refitting cooling system hoses and unions).
Refit the pump-cylinder hoses (Refitting the cylinder/piston assembly).
Refill the cooling system (Changing the coolant).
Refit the clutch slave cylinder (Refitting the clutch slave cylinder).
Refit the front sprocket cover (Refitting the front sprocket cover).
Fill the system with engine oil (Changing the engine oil and filter cartridge).

Removing the timing gears

Drain the engine oil (Changing the engine oil and filter cartridge).
Remove the front sprocket cover (Removing the front sprocket cover).
Remove the clutch slave cylinder (Removing the clutch slave cylinder).
Drain the coolant (Changing the coolant).
Remove the pump-cylinder hoses (Removing the cylinder/piston assembly).
Remove the pump-water radiator hose (Removing cooling system hoses and unions).
Remove the generator cover and flywheel-generator assembly (Removing generator cover).

Slide out the driving gear (A) of the timing gear pair (1), the spacer (7) and remove the key (2).

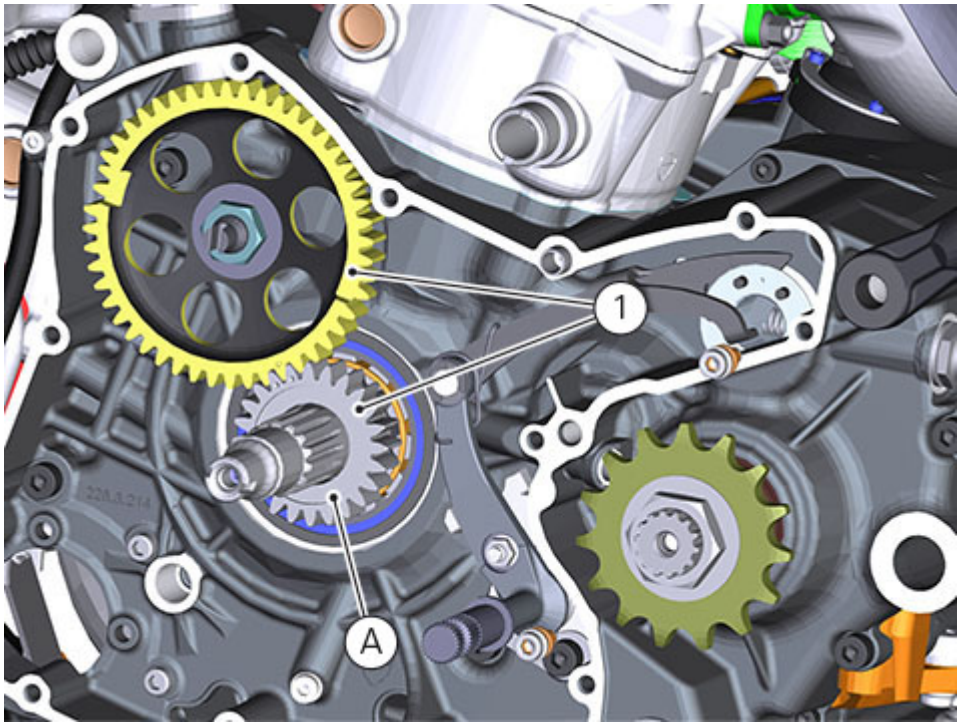

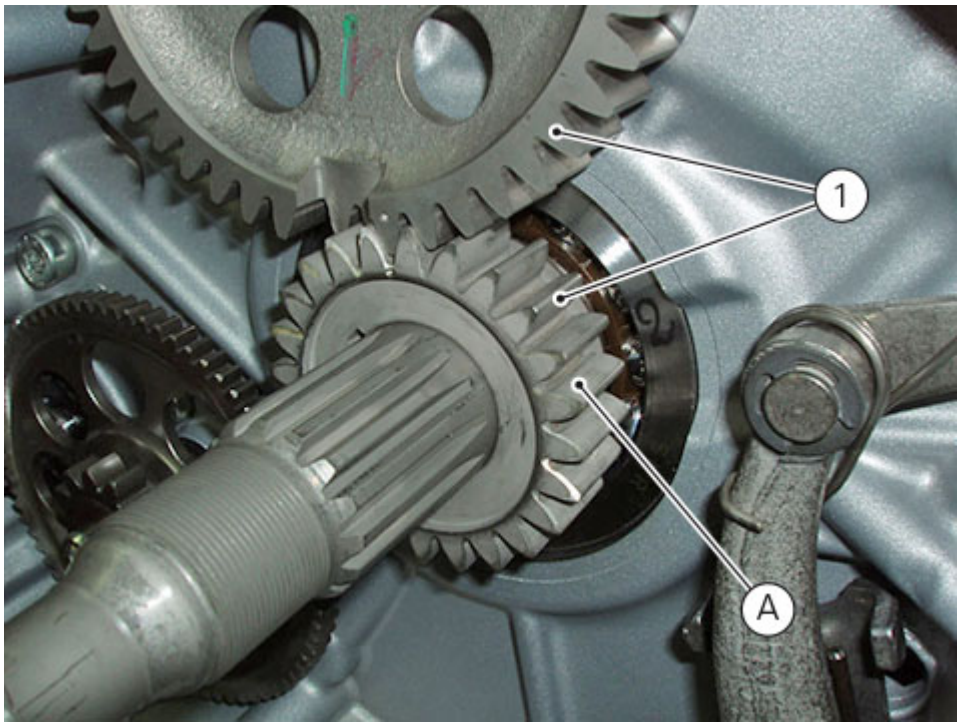

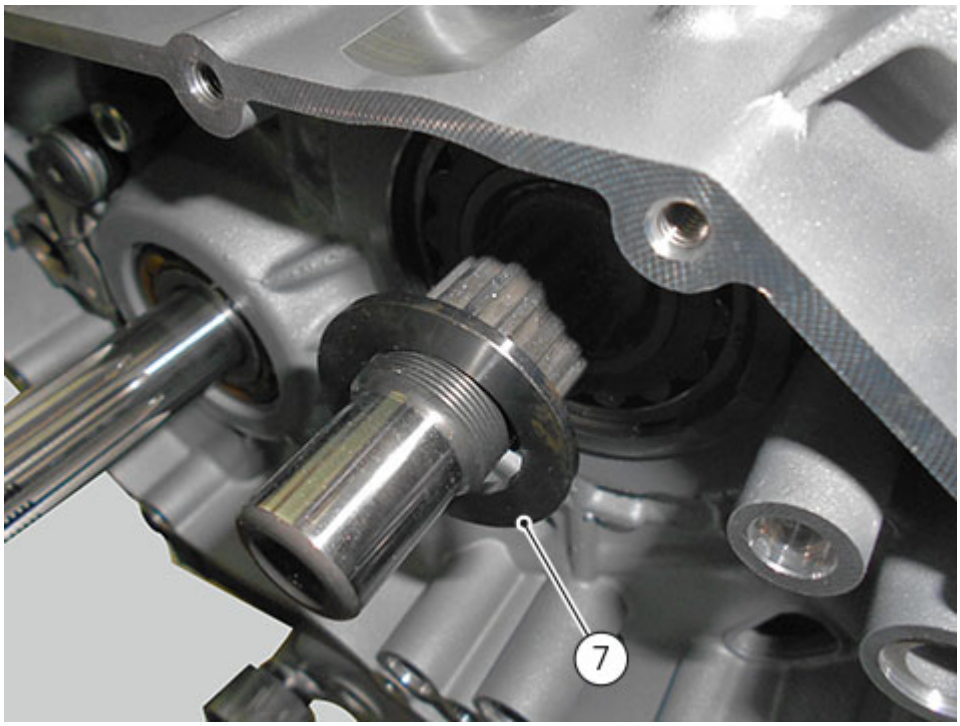

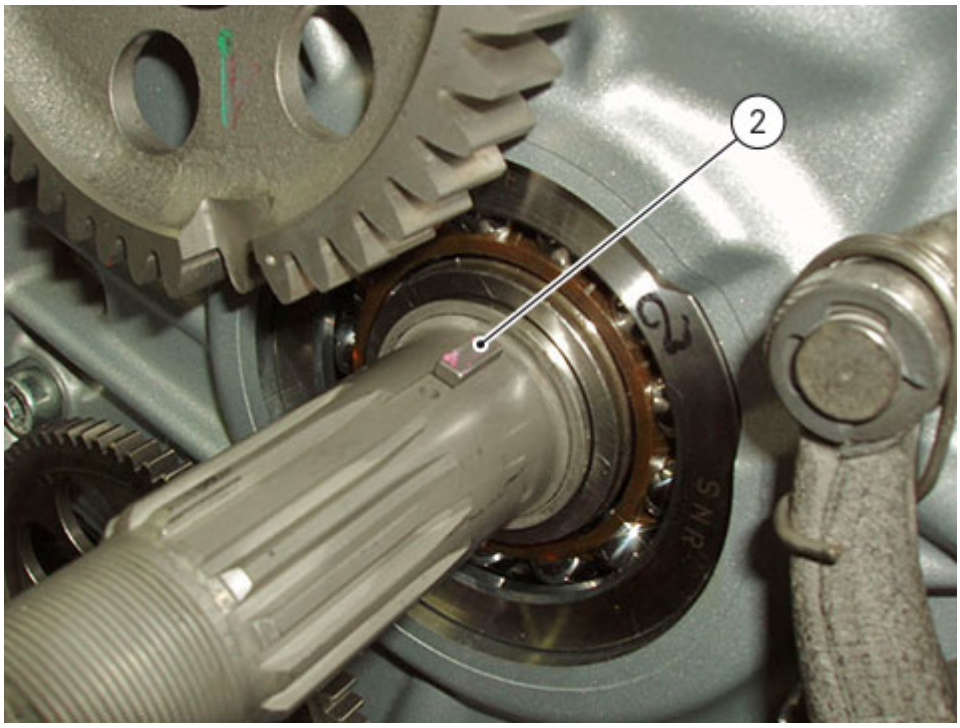

Straighten out the lock washer (3) of nut (4).
Restrain the timing gear by inserting a pin in one of the holes, and unscrew the locking nut (4).
Remove the nut (4), washer (3), timing driven gear (B) and key (5) from the timing layshaft.

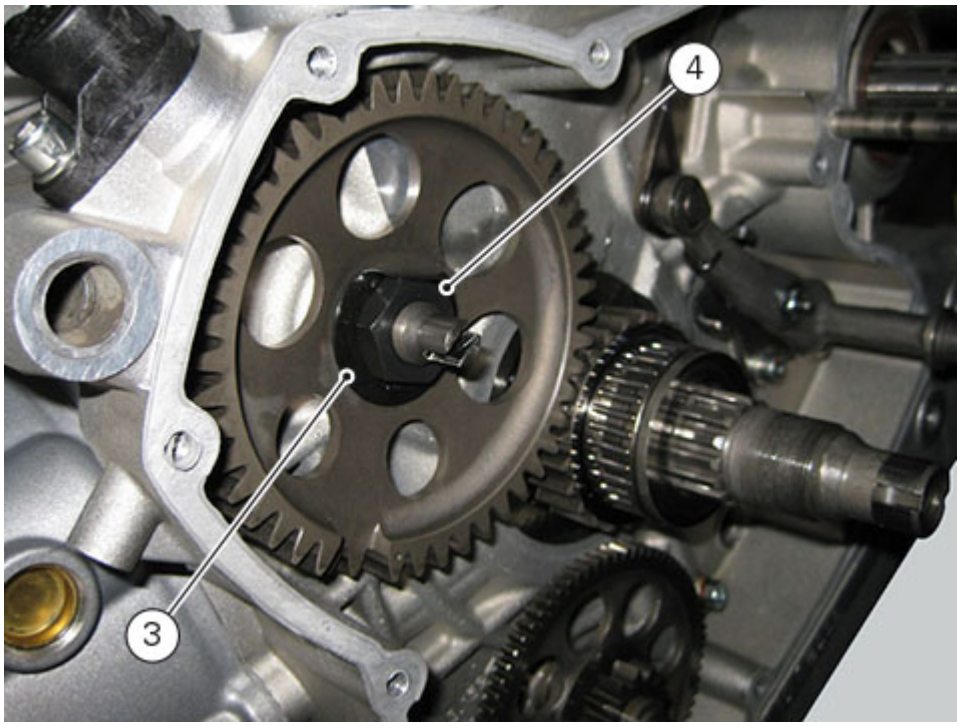
4
3

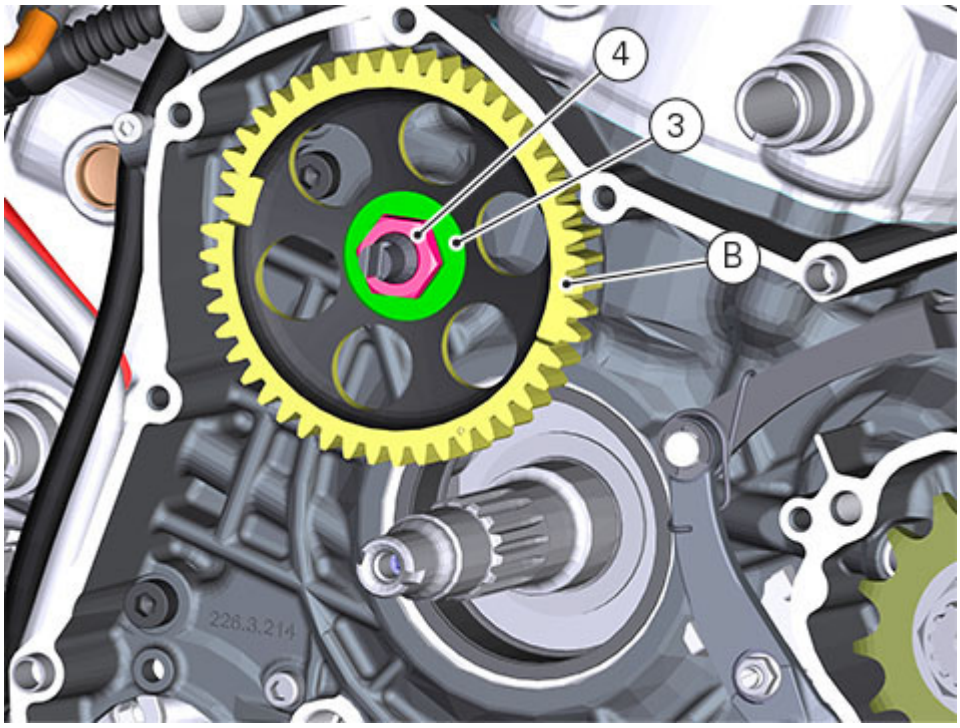
4
3
B
226.3.214

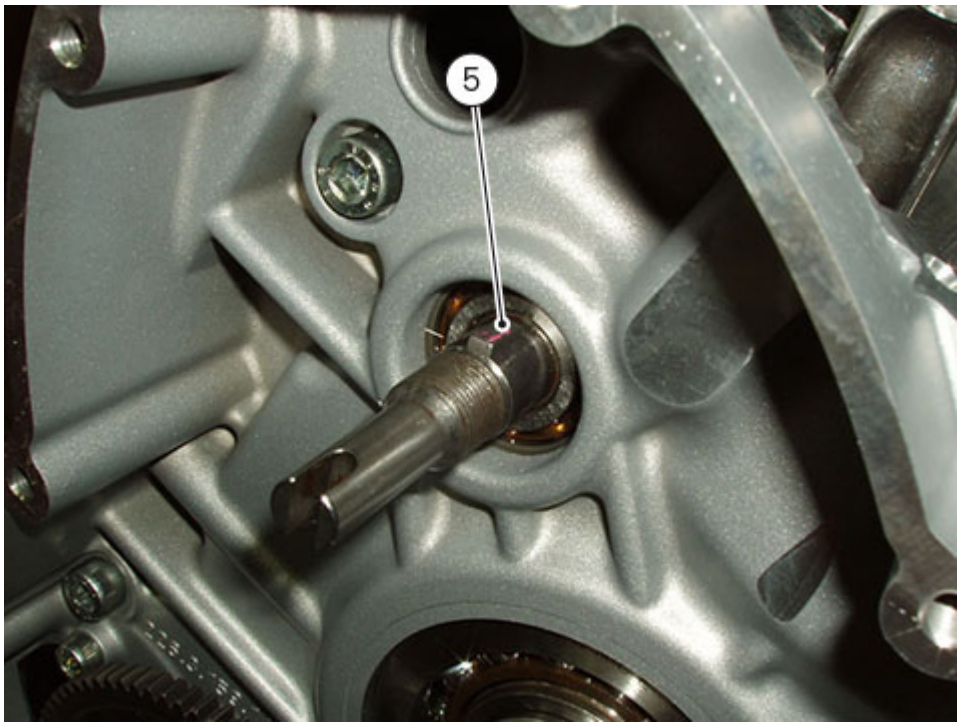
5

Refitting the external components

Make sure that the O-rings (21) are fitted on the crankcase.

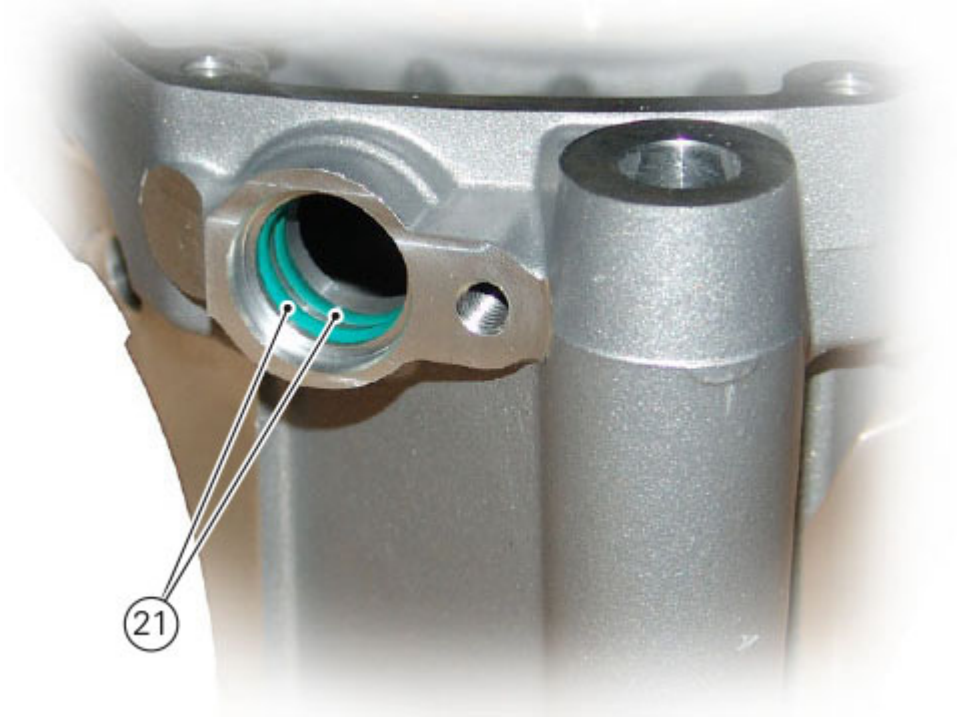

Fit the engine sensor (18) in its seat in the crankcase half.
Start the screw (19) with the washer (20) and tighten to a torque of 10 Nm (Min. 9 Nm - Max. 11 Nm).



Use a feeler gauge to check the clearance between the pick-up sensor (18) and the timing gear (22).
The value must be between 0.6 and 0.8 mm.

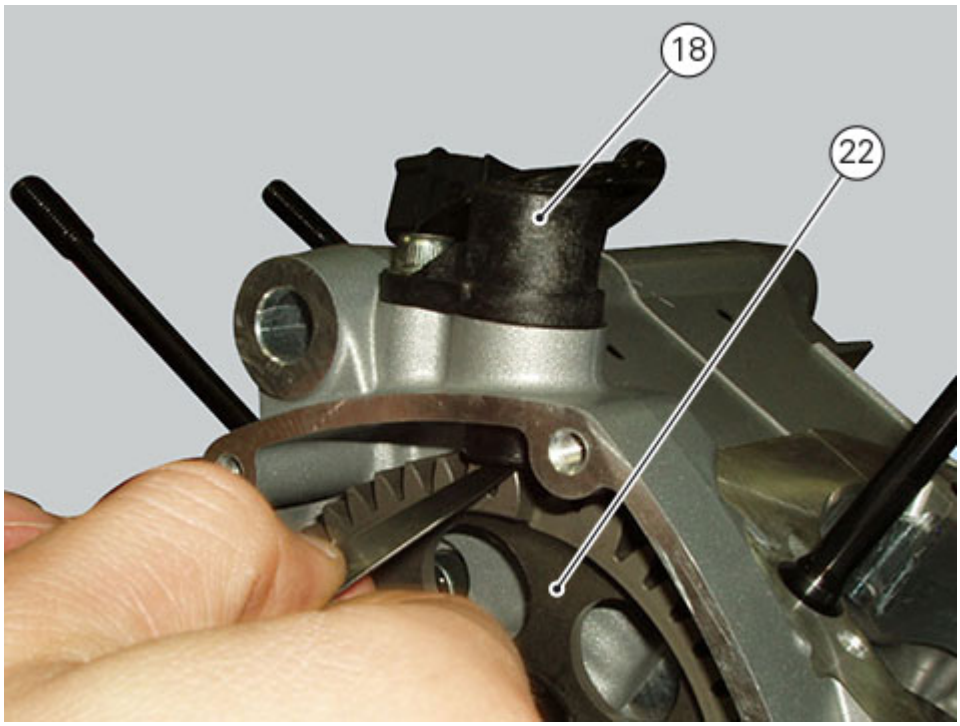

If the oil vapour breather valve has been previously disassembled, reassemble it by tightening the three screws (1) to a torque of 1 Nm ± 10%.
Lubricate O-rings (2) and install the oil vapour breather valve assembly in the engine block.
Tighten screw (5) to a torque of 10 Nm (Min. 9 m - Max. 11 Nm).

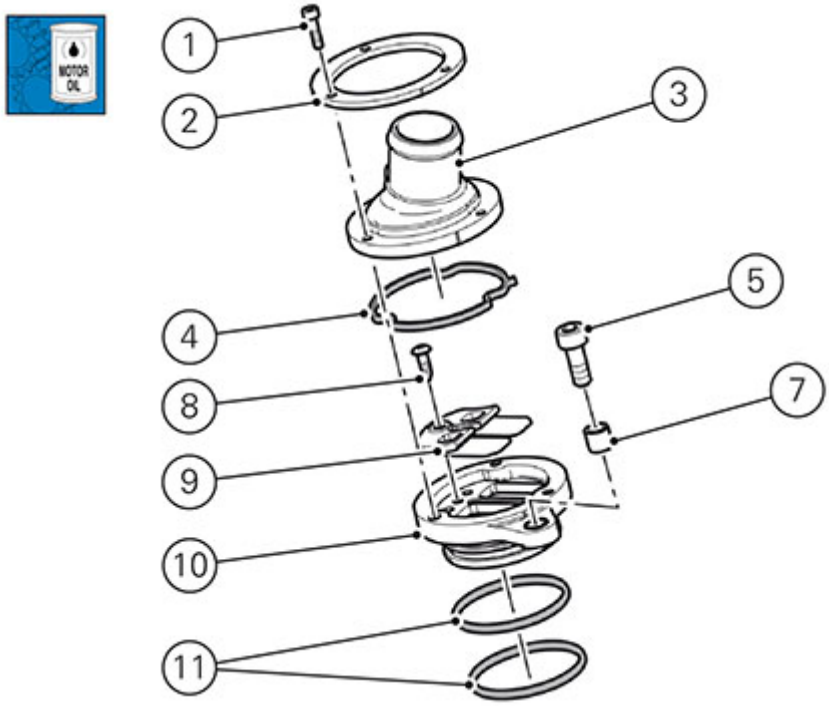

Position the by-pass spring (13) on the nipple (12) and apply the recommended threadlocker to the end of the nipple to be screwed in the crankcase half.
Start oil filter cartridge support nipple (12) fully into the crankcase half, positioning the spring in the seat between the two notches (C).
Tighten the nipple to a torque of 42 Nm (Min. 38 Nm - Max. 46 Nm).

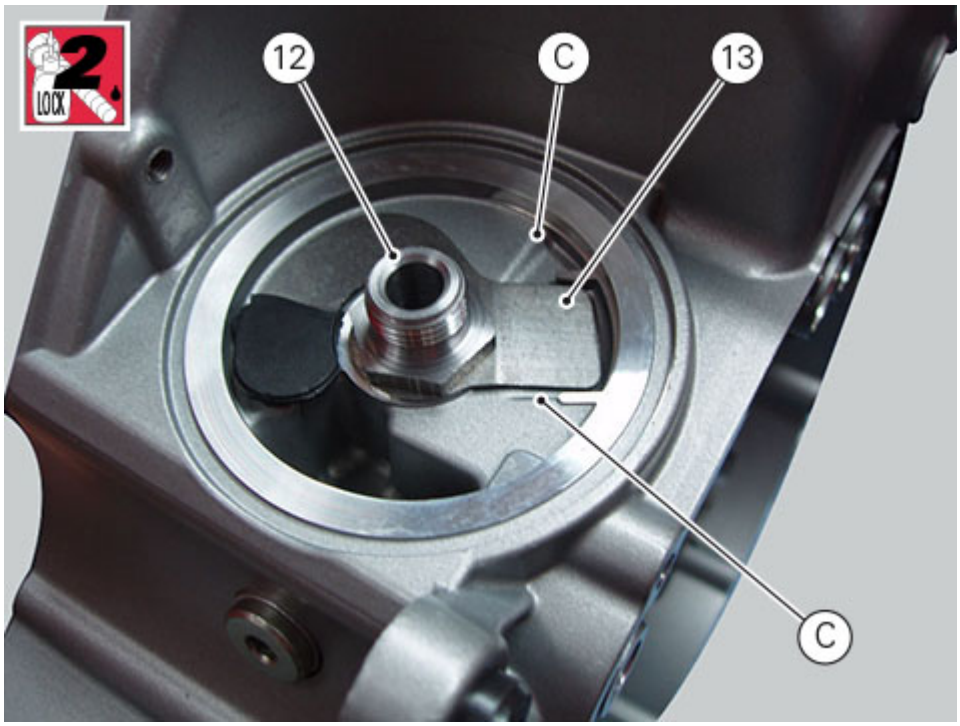

Fit the seal (15) on the oil drain plug (14).
Position the seal so that the side with the square edge (D) is facing the chain side crankcase half.
Clean the plug thread, apply a bead of specified sealant along the plug thread spreading it by the entire circumference (360°).
Screw the drain plug (14) with seal (15) to a torque of 20 Nm (Min. 18 Nm - Max. 22Nm).

Note
After tightening, remove any excessive sealant.

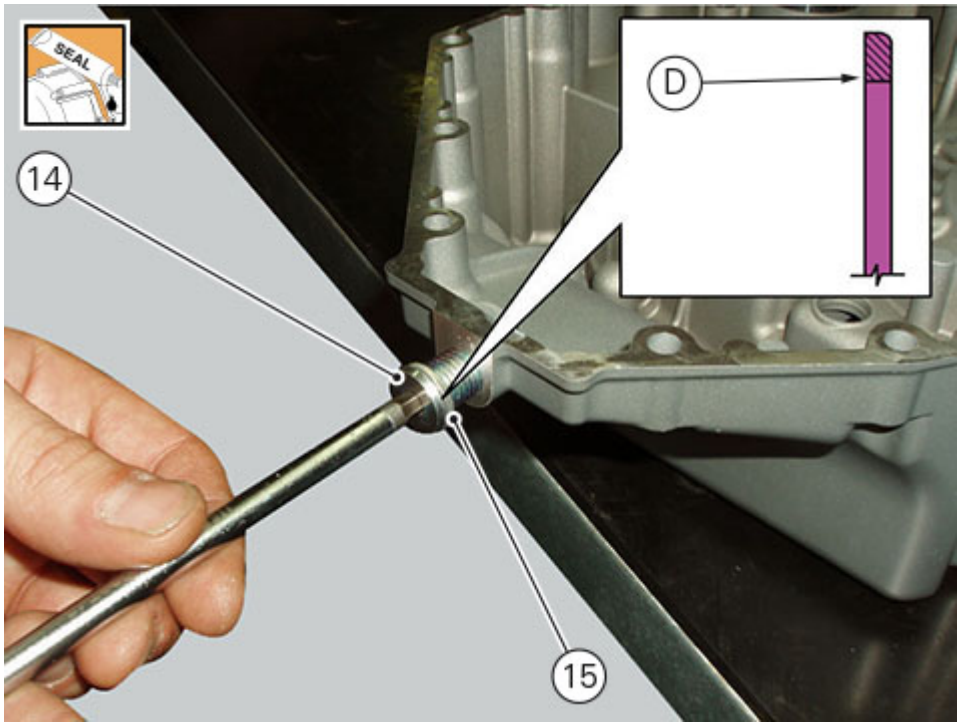

Refit the neutral gear sensor (16) and connect it.

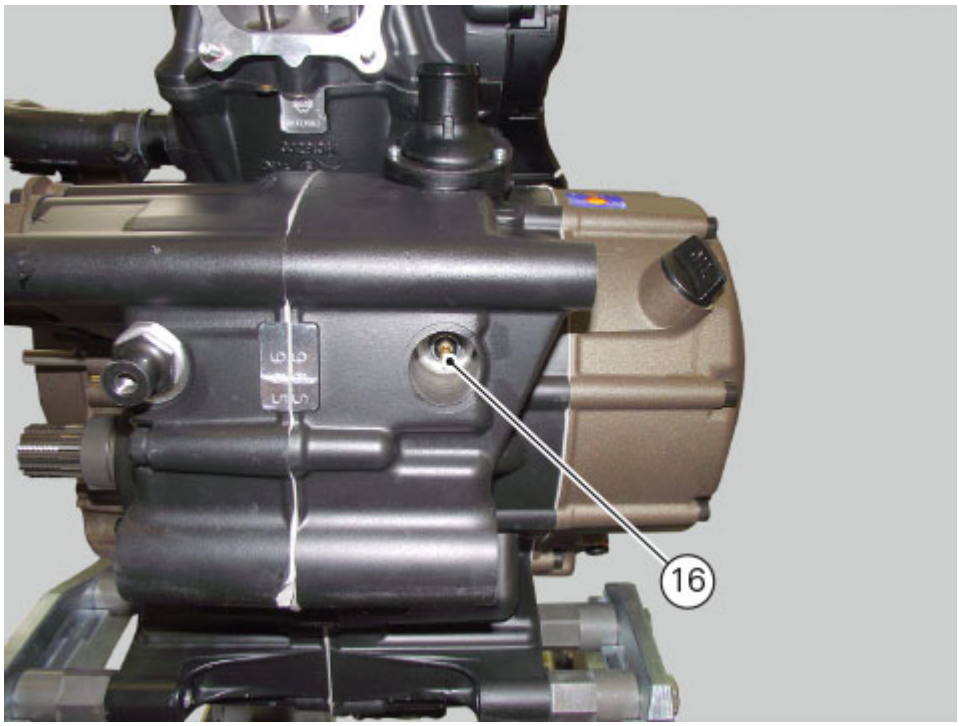

Refit the mesh filter (A) (Changing the engine oil and filter cartridge).

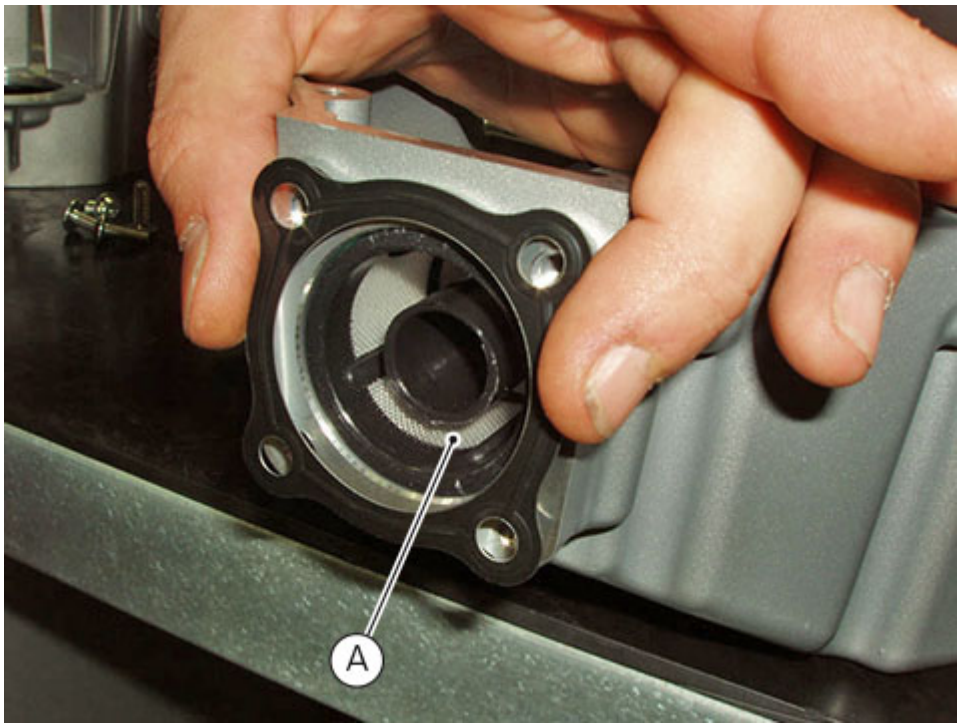

Check the condition of the O-rings (22) of the stud bolts (17) and replace them if necessary.
Use tool (E) (no. **88713.1920**) to install O-rings (22) in seats (F) of stud bolts (17).

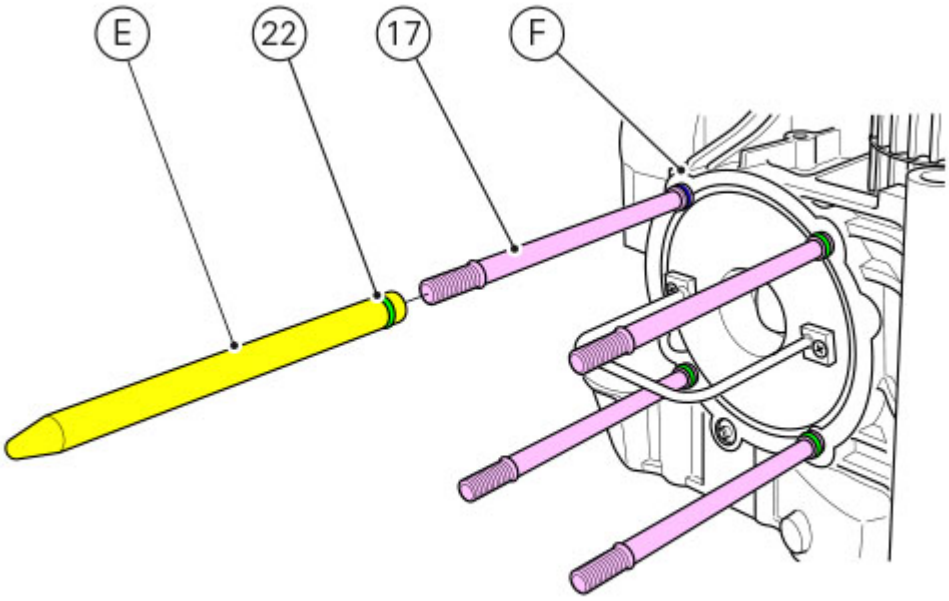

Now fit the stud bolts (17) on the crankcase halves, applying sealant on the thread and tightening to a torque of 30 Nm (Min. 28 Nm - Max. 32 Nm).
Use the appropriate commercial tool for this operation.

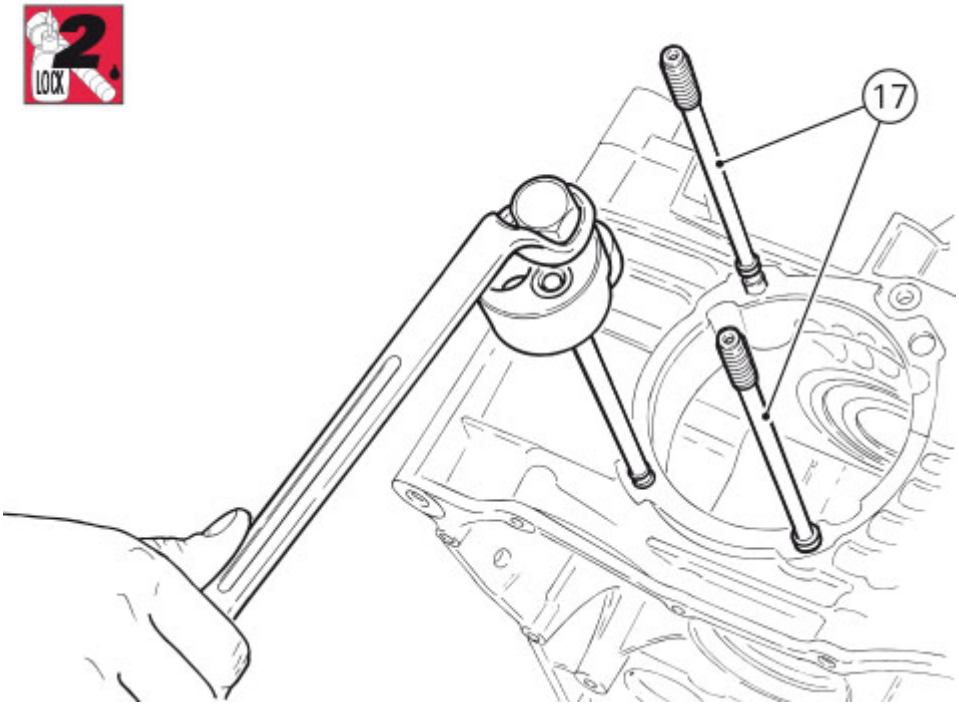

If previously removed, apply recommended threadlocker on dowel (23), tighten to a torque of 15 Nm (Min. 13.5 Nm - Max. 16.5 Nm), fit the seal (24) on the service plug (25): the seal must be positioned so that the square edge faces the clutch-side crankcase half.
Apply the specified threadlocker on the plug thread (25), insert it in the crankcase half and tighten to a torque of 15 Nm (Min. 13 Nm - Max. 17 Nm).

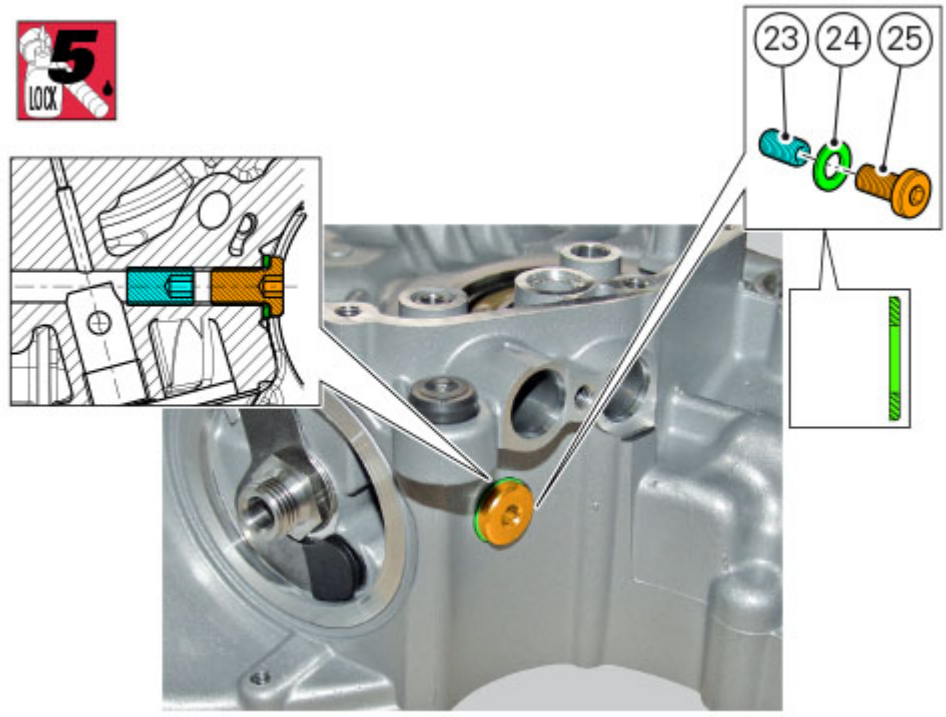

Refit the mesh filter (Changing the engine oil and filter cartridge).
Refit the primary drive gear (Refitting the primary drive gear and checking backlash).
Refit the oil pump (Refitting the oil pump).
Refit the clutch unit (Refitting the clutch).
Refit the clutch cover (Refitting the clutch cover).
Refit the starter motor (Refitting the starter motor).
Refit the generator assembly and the generator side cover (Refitting the flywheel/generator assembly).
Refit the complete cylinder/piston assembly (Refitting the cylinder/piston assembly).
Refit the complete cylinder head assembly (Reassembling the cylinder head).
Refit the camshaft assembly (Refitting the camshafts).
Refit the starter motor (Refitting the starter motor).
Refit the timing system components (Refitting the cylinder head pulleys/fixed tensioners).
Refit the engine in the frame (Refitting the engine).

Removing outer components

Remove the engine from the frame (Removing the engine).
Remove the timing components (Removing the timing outer covers).
Remove the starter motor (Removing the starter motor).
Remove the camshaft assembly (Removing the camshafts).
Remove the complete cylinder head assembly (Removing the cylinder heads).
Remove the complete cylinder/piston assembly (Removing the cylinder/piston assembly).
Remove the generator side cover and the generator assembly (Removing the generator cover).
Remove the starter motor (Removing the starter motor).
Remove the clutch cover (Removing the clutch cover).
Remove the clutch unit (Removing the clutch).
Remove the oil pump (Removing the oil pump).
Remove the primary drive gear (Removing the primary drive gear).
Remove the mesh filter (Changing the engine oil and filter cartridge).

Loosen the screws (1) and remove flange (2).
Remove the oil breather valve (3) union from the engine.

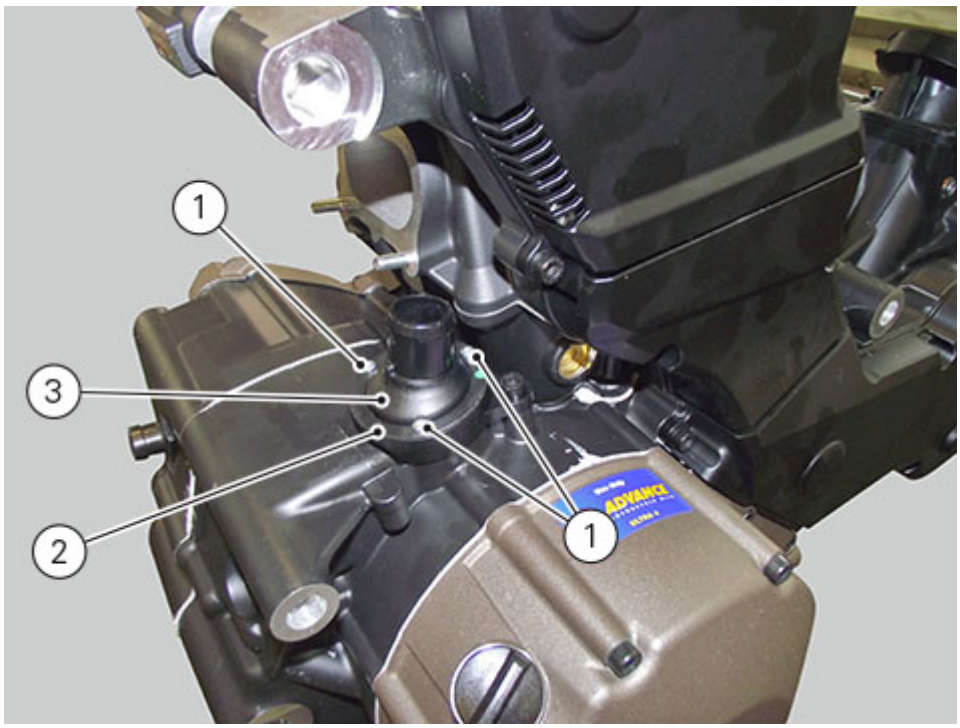

Remove gasket (4).

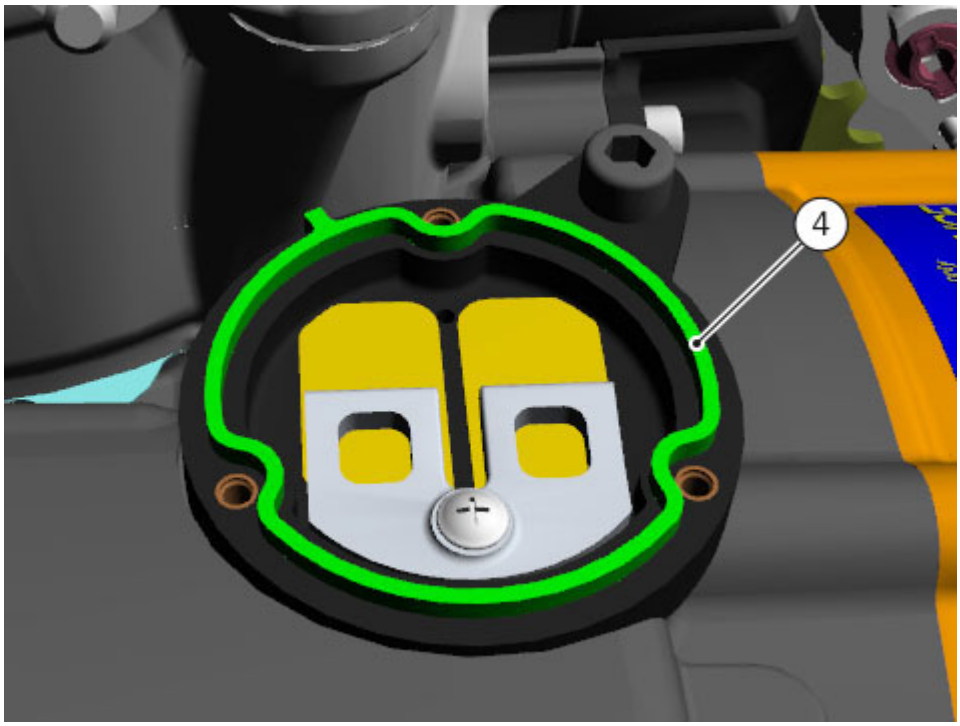

Loosen screw (5) and remove the lower flange (6) of the oil breather valve and collect spacer (7).

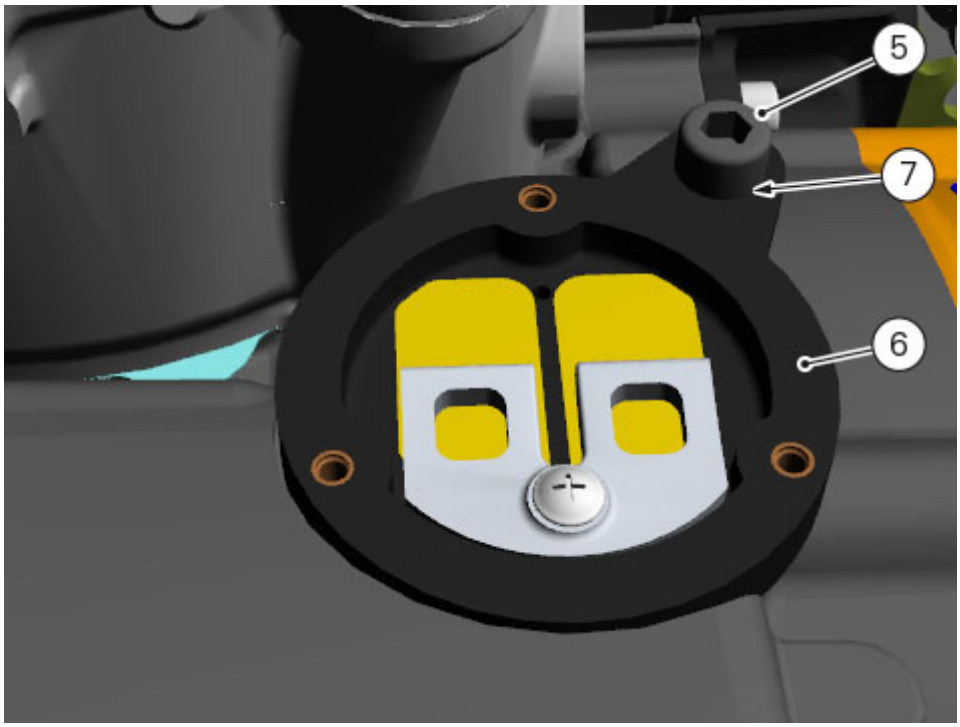

Undo screw (8) and remove spacer (9).
Remove reed valve (10).
If necessary, remove the valve support (B).
Collect the two O-rings (11).
Check the condition of the two O-rings (11) and replace them if necessary.

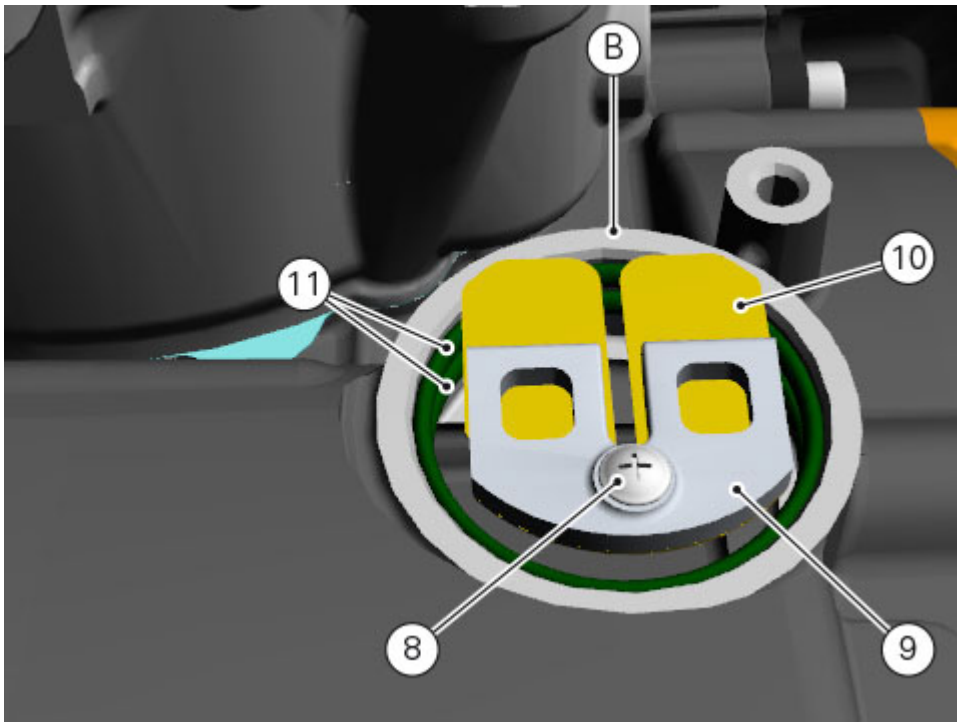

Unscrew and remove the oil filter support nipple (12) and remove also by-pass spring (13).

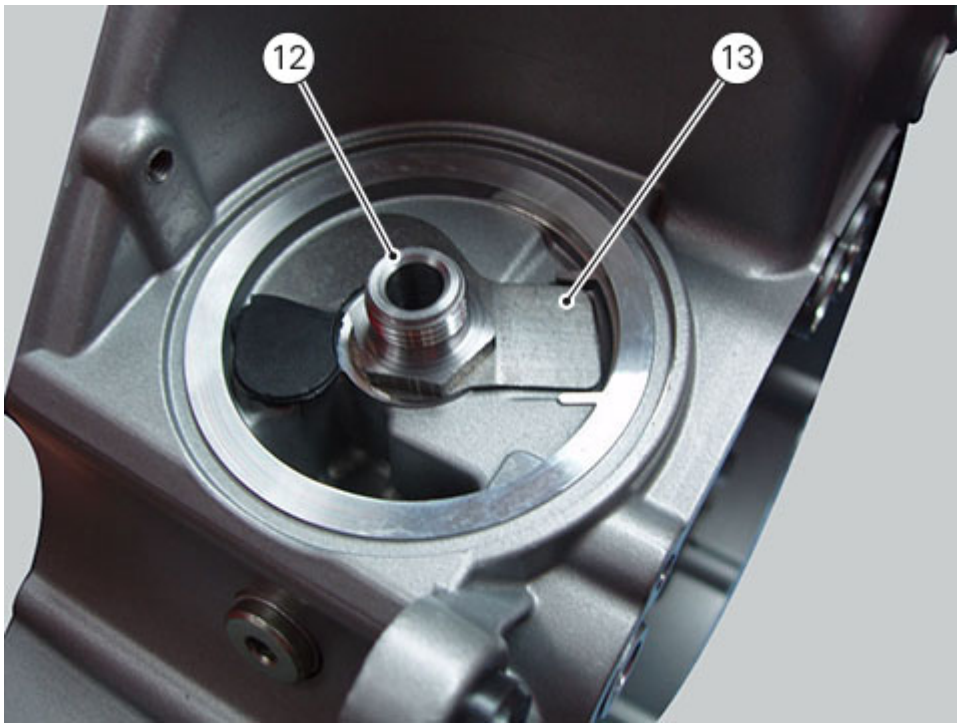

Remove the mesh filter (A) from the clutch-side crankcase half (Changing coolant).

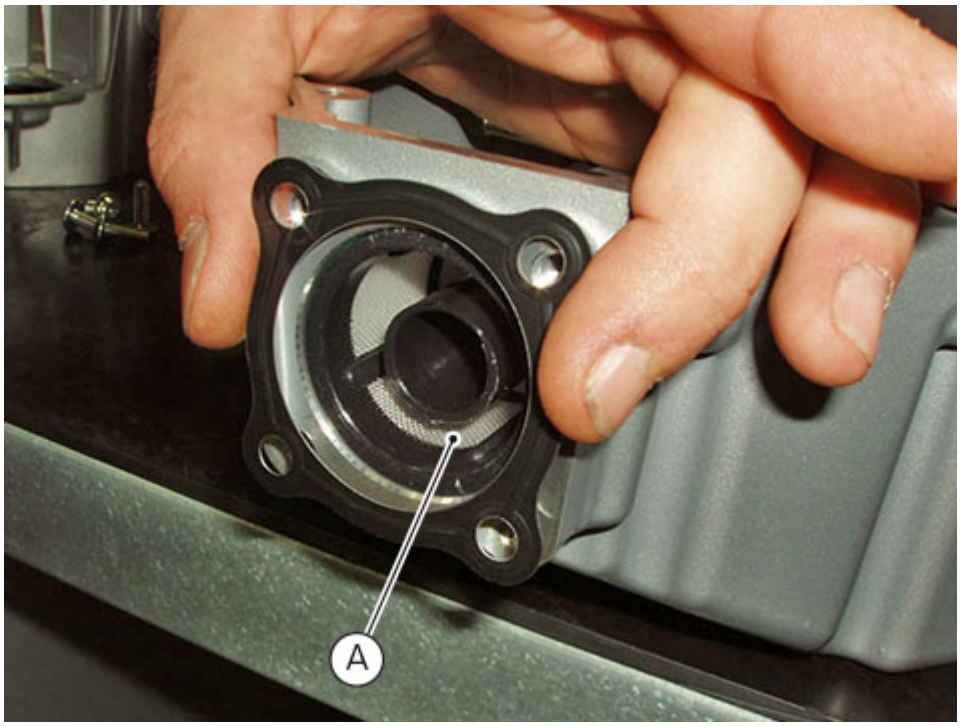

Remove the drain plug (14) with its seal (15).

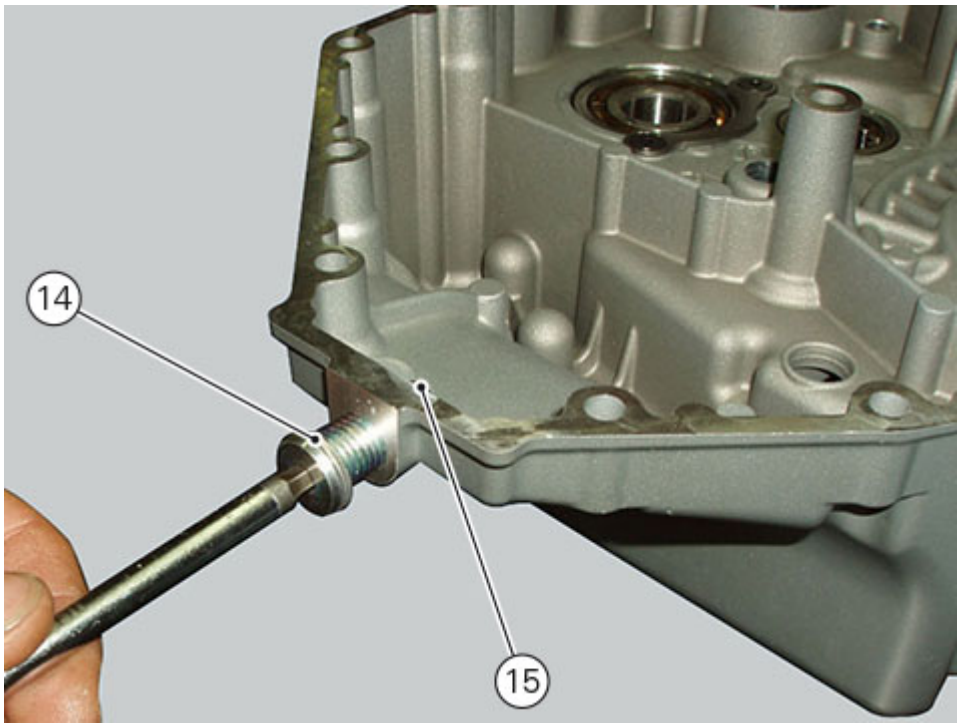

If necessary, remove the neutral gear sensor (16) after disconnecting it from its connector.

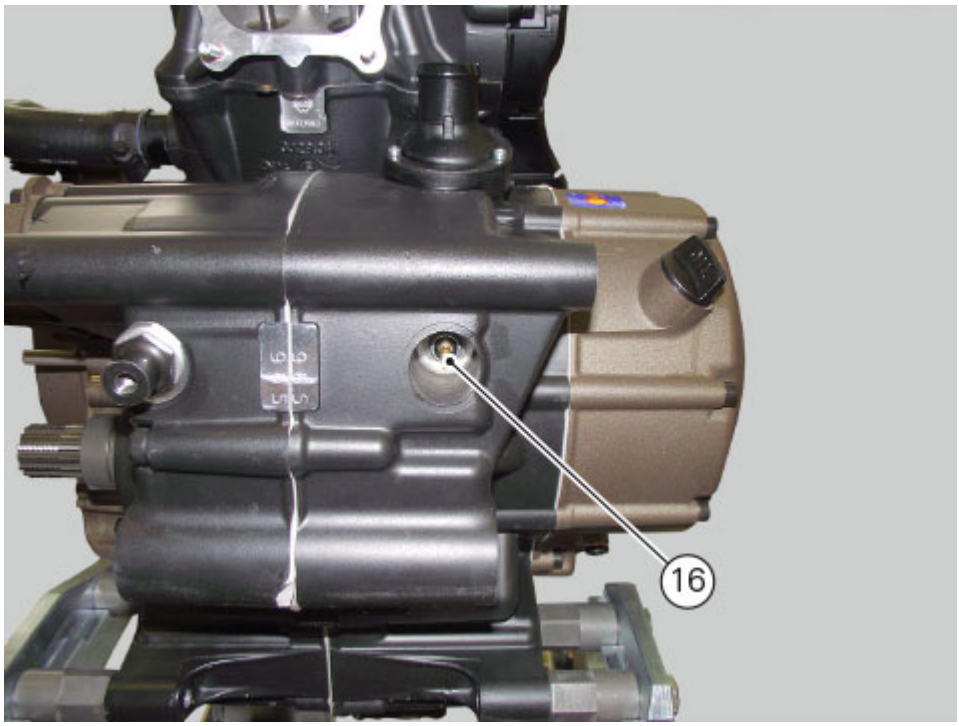

Remove the cylinder head stud bolts (17) with the aid of the appropriate tool.

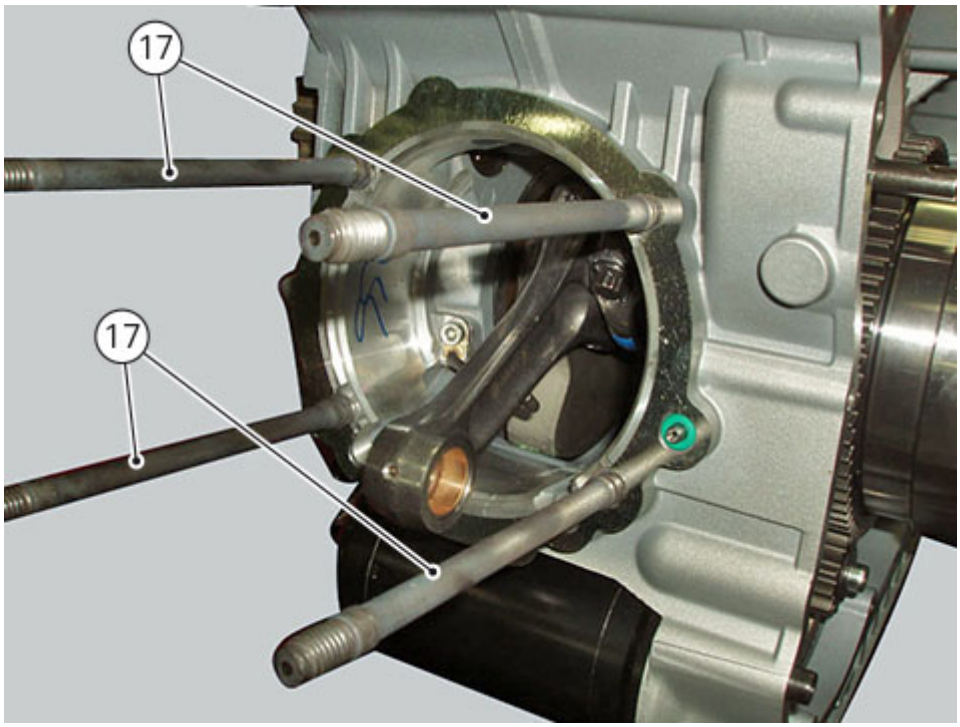

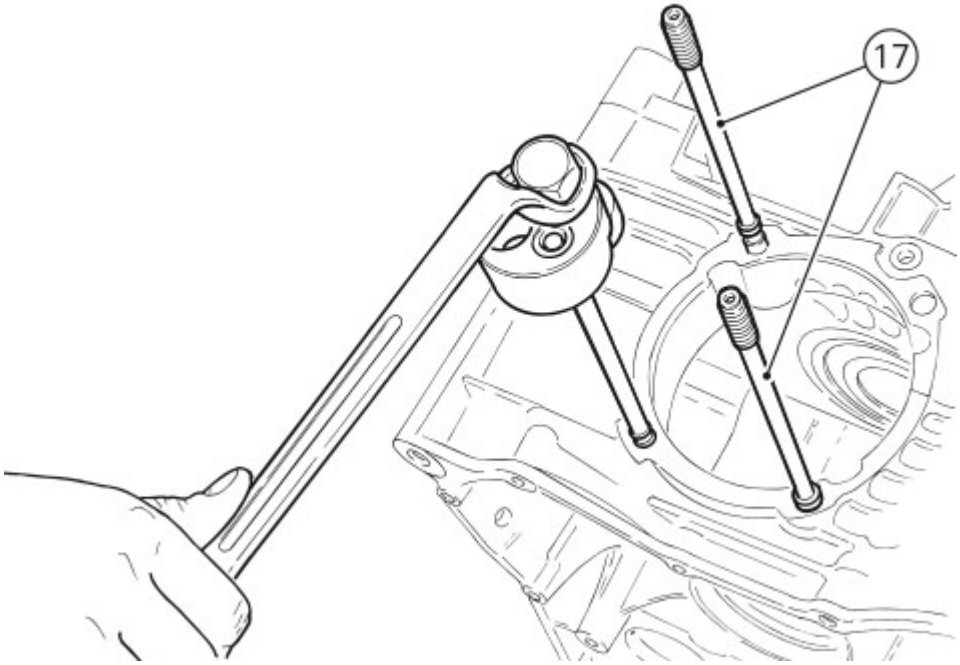

To remove the pick-up sensor (18), unscrew the screw (19) and recover the washer (20).

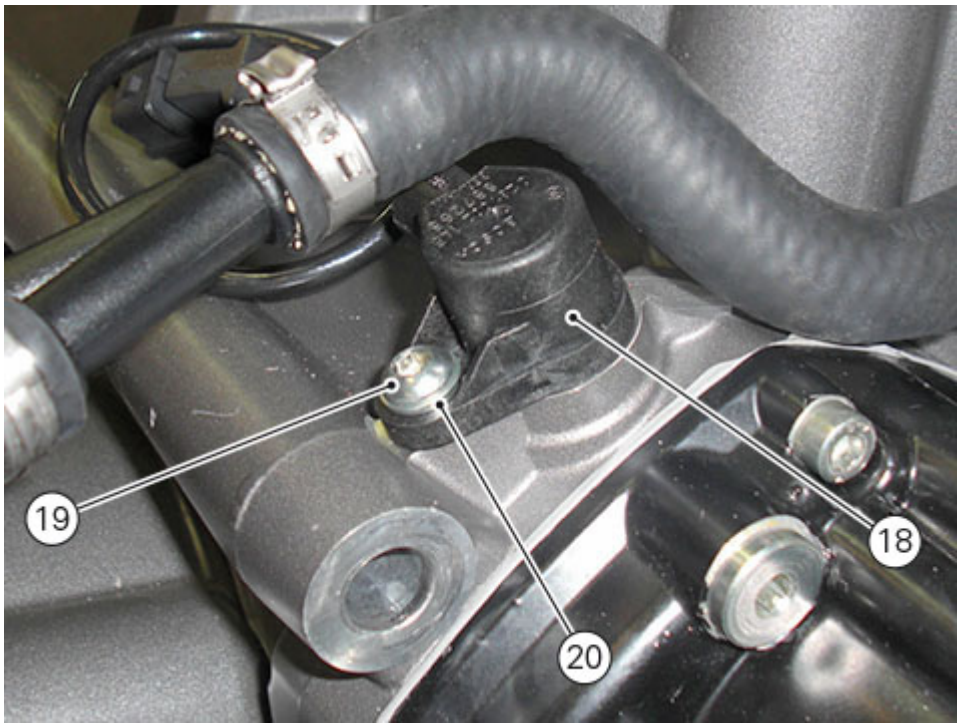

Check the condition of O-rings (21) and replace them if necessary.

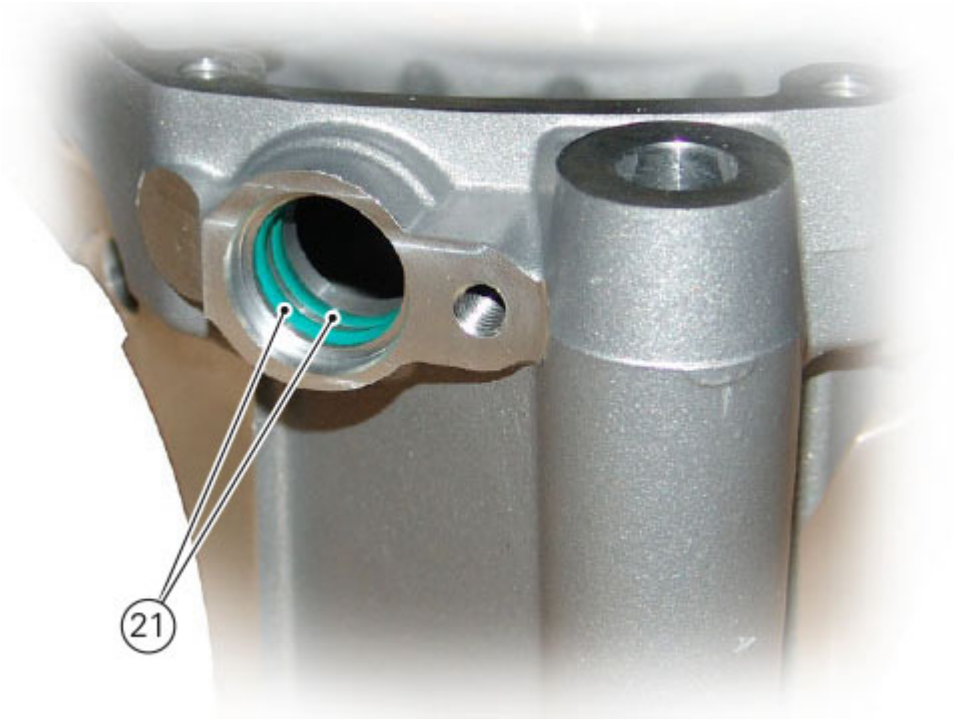
21

Closing the crankcase

If removed, apply threadlocker on the screw (10), insert it with the washer (11) on the chain side crankcase half (15) and tighten it to a torque of 5 Nm (Min. 4 Nm - Max. 6 Nm).

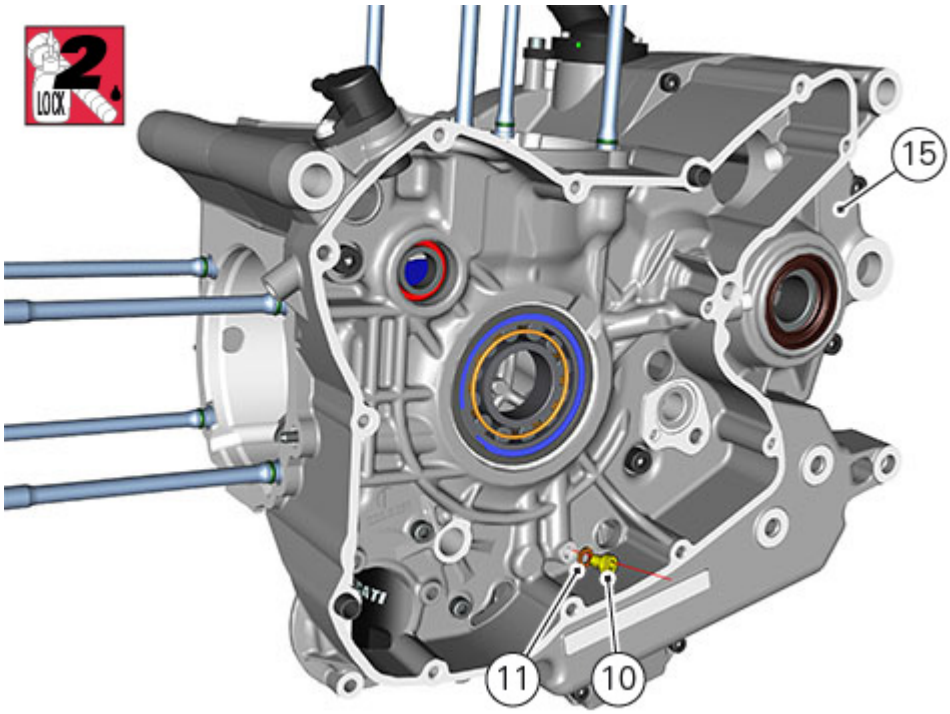

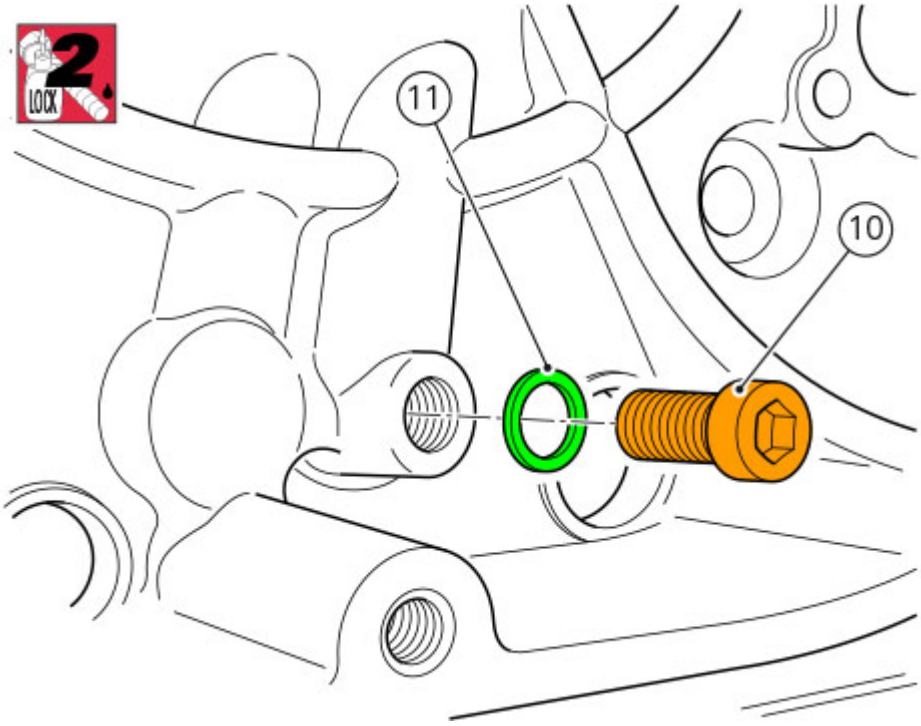

If previously removed, apply recommended threadlocker to the thread of dowel (12) and tighten to a torque of 20 Nm (Min. 18 Nm - Max. 22 Nm).

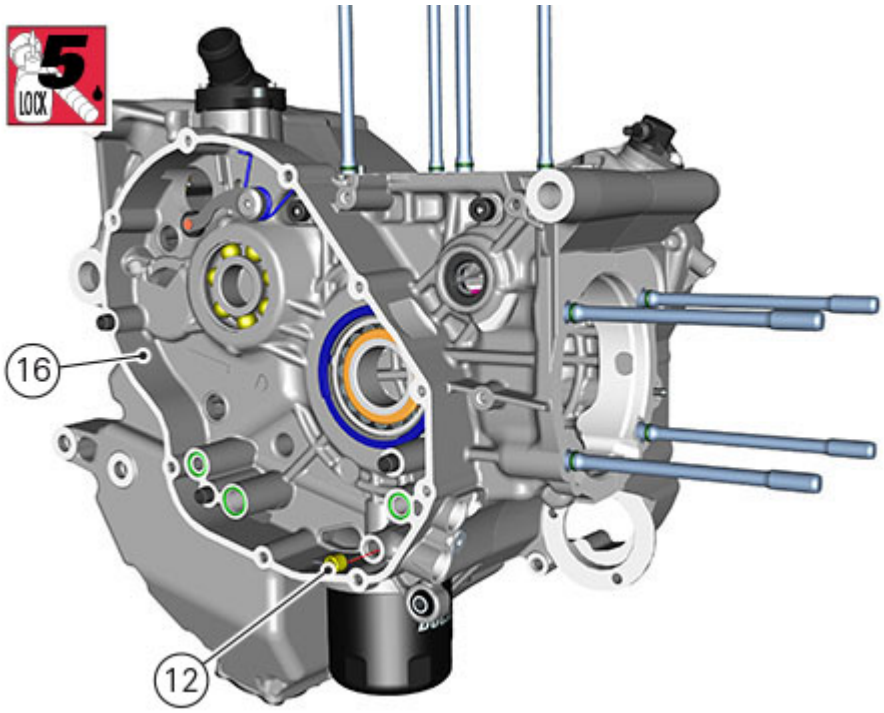

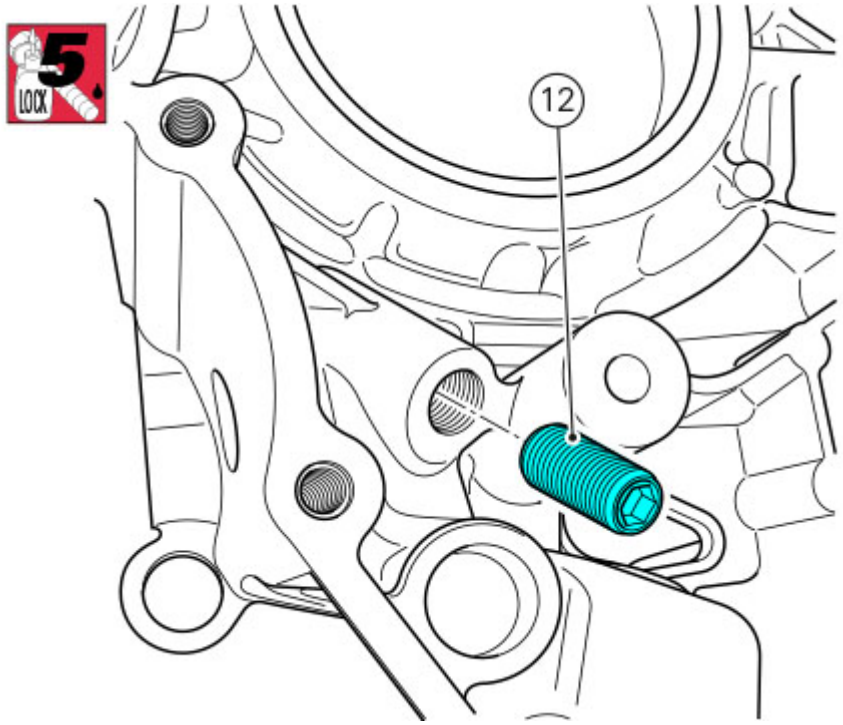

Check that the distance between dowel (9), screwed beyond the crankcase surface, and the crankcase surface is (1.0 ÷ 1.2) mm.

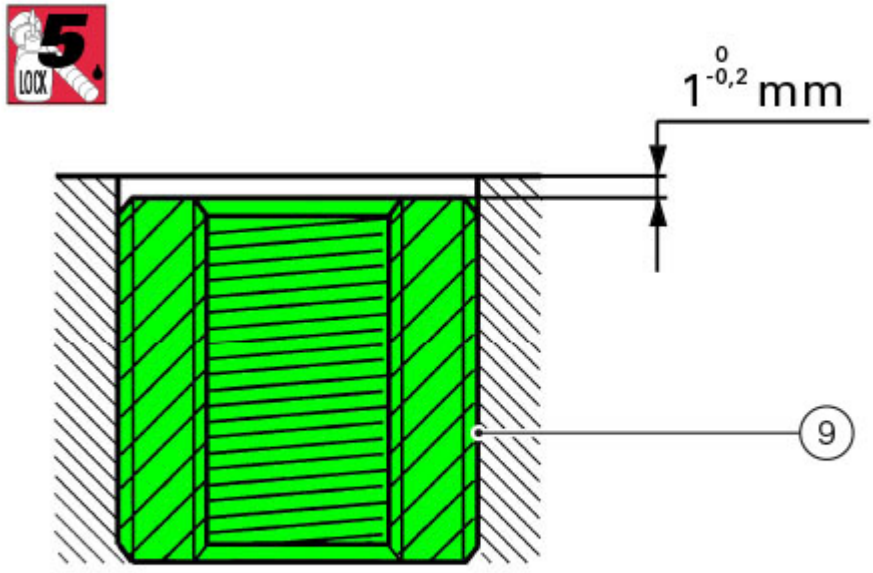

If previously removed, apply threadlocker to the internal plug (17) of the oil mesh filter and tighten it to a torque of 24 Nm (Min. 21 Nm - Max. 27 Nm).

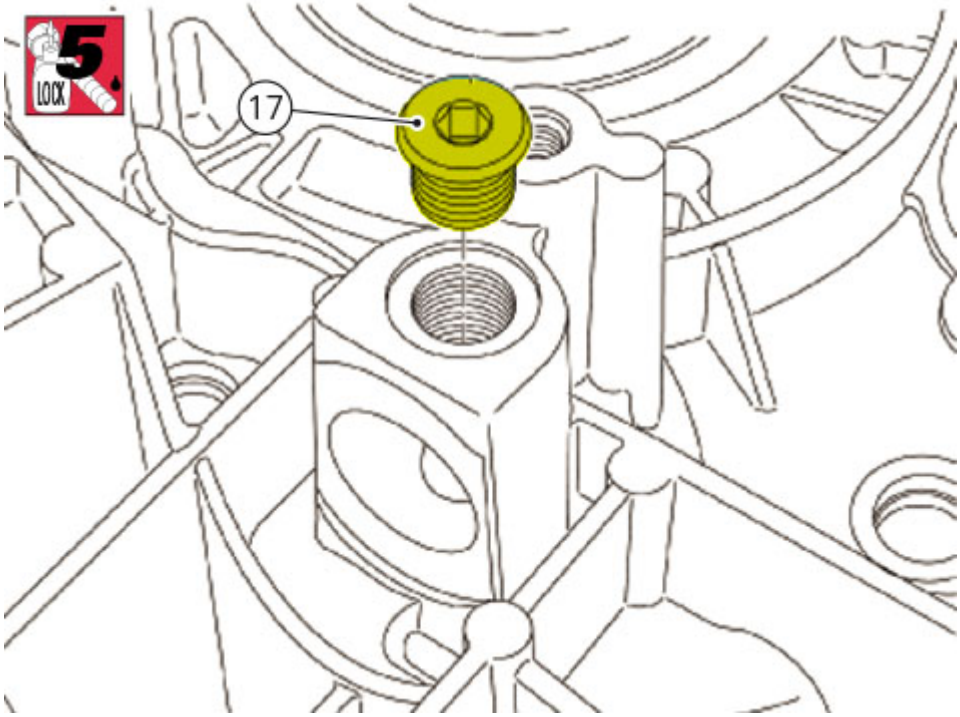

Install the O-ring (14) in its seat (C) in the crankcase half.
Fit the hose (9) in the crankcase half, inserting the end (D) fully in the O-ring. Align the hole (E) of the hose with the threaded hole (F) in the crankcase half.
Apply threadlocker to the screw (8) and start it in the threaded hole (F).
Tighten the screw to a torque of 8 Nm (Min. 7 Nm - Max. 9 Nm).

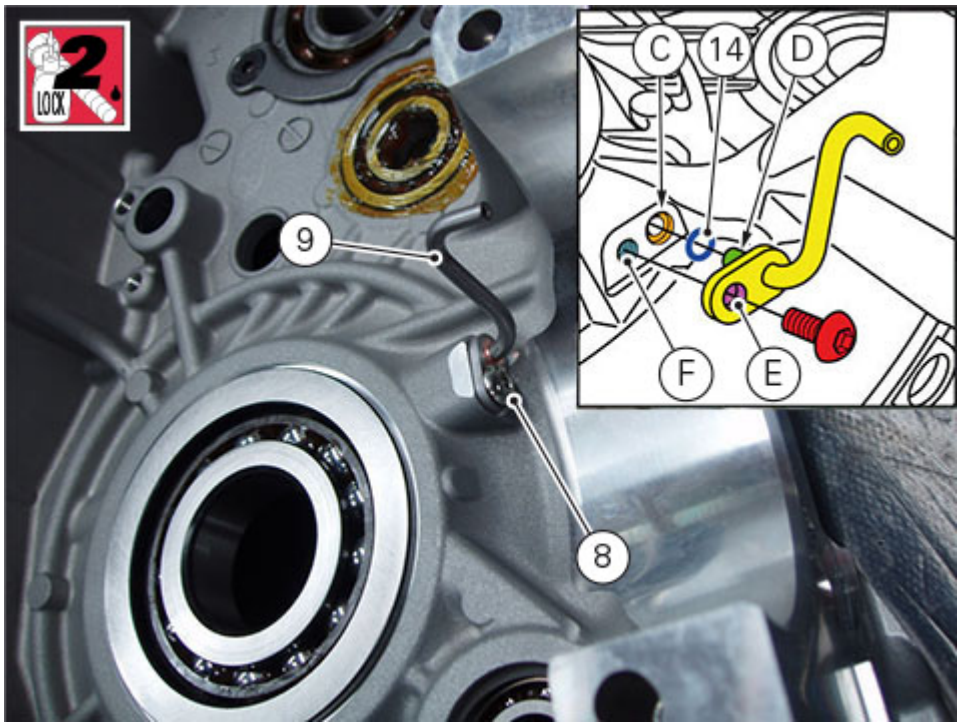

Refit the timing layshaft as described in paragraph (Refitting the timing layshaft pulley).

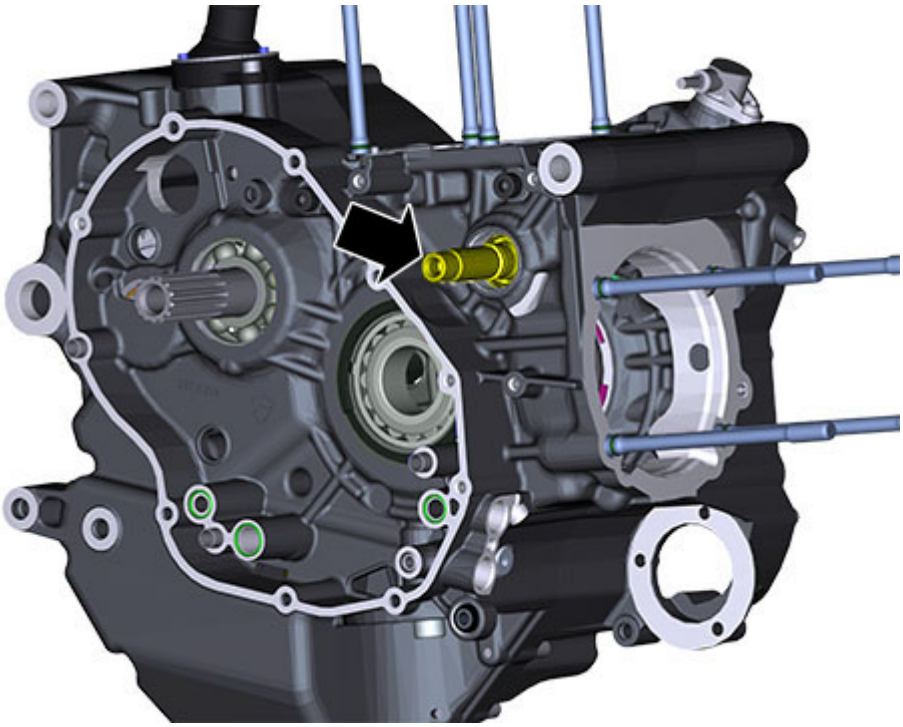

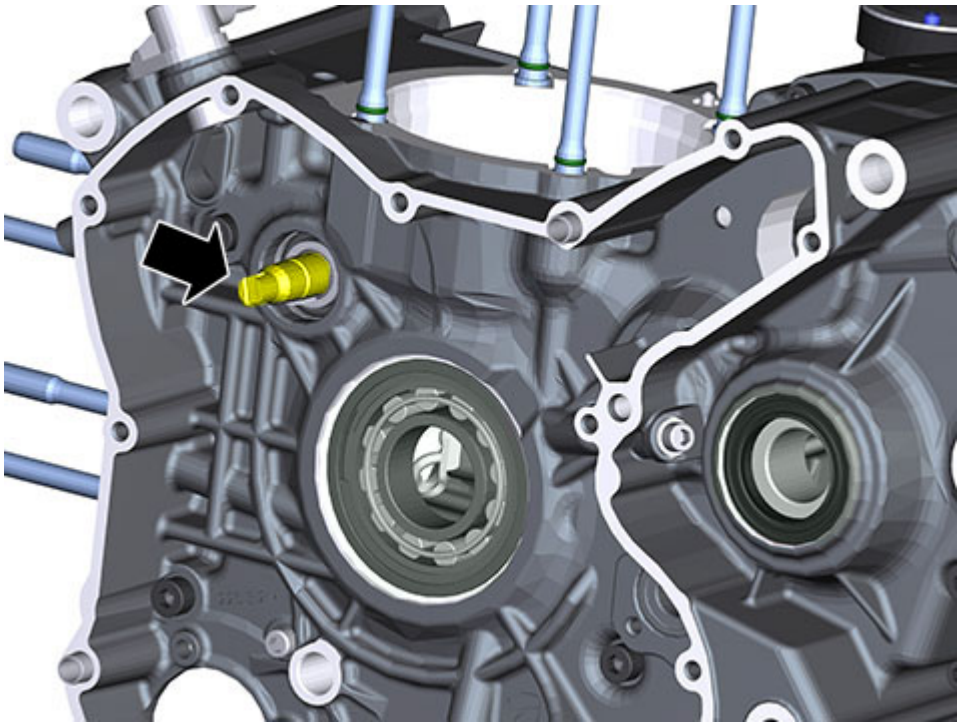

When refitting used components, before installing the gearbox assembly in the crankcase half, make sure that the inner races (G) of the gearbox shaft bearings are fitted into the correct bearings and have not been left on the shafts.

Match gearbox shafts, fit the shims and fit them to the clutch-side crankcase half.

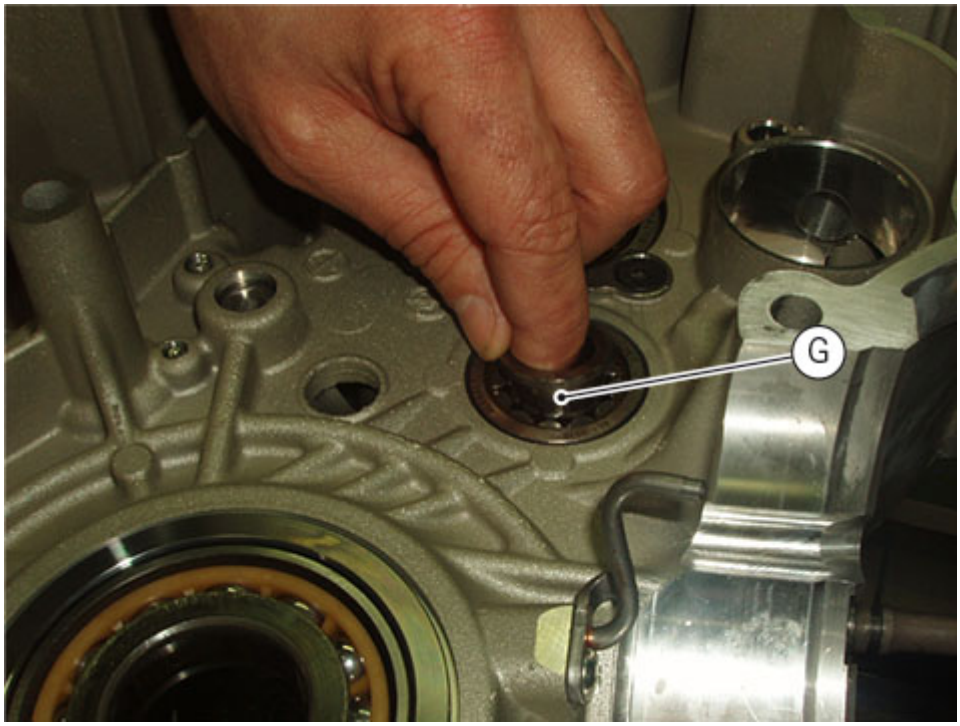

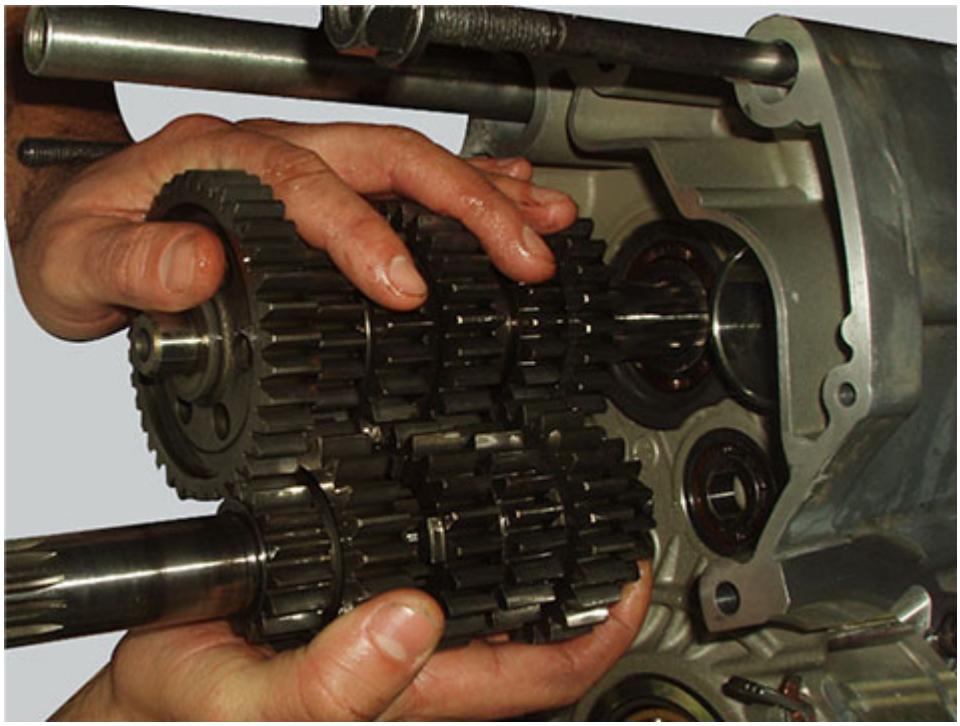

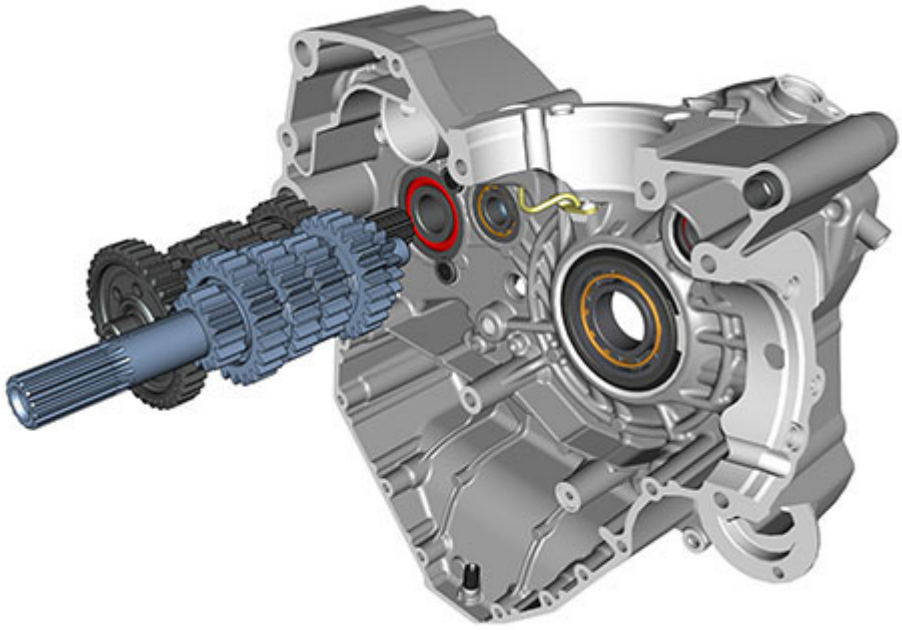

Insert the forks of 1st - 4th and 2nd - 3rd speed (H) in the corresponding sliding slots of the secondary shaft driven gears and insert the pin (I) in the forks: the two forks must be fitted with the number that indicates the gear facing upwards.

Note
The two selector forks are identical.

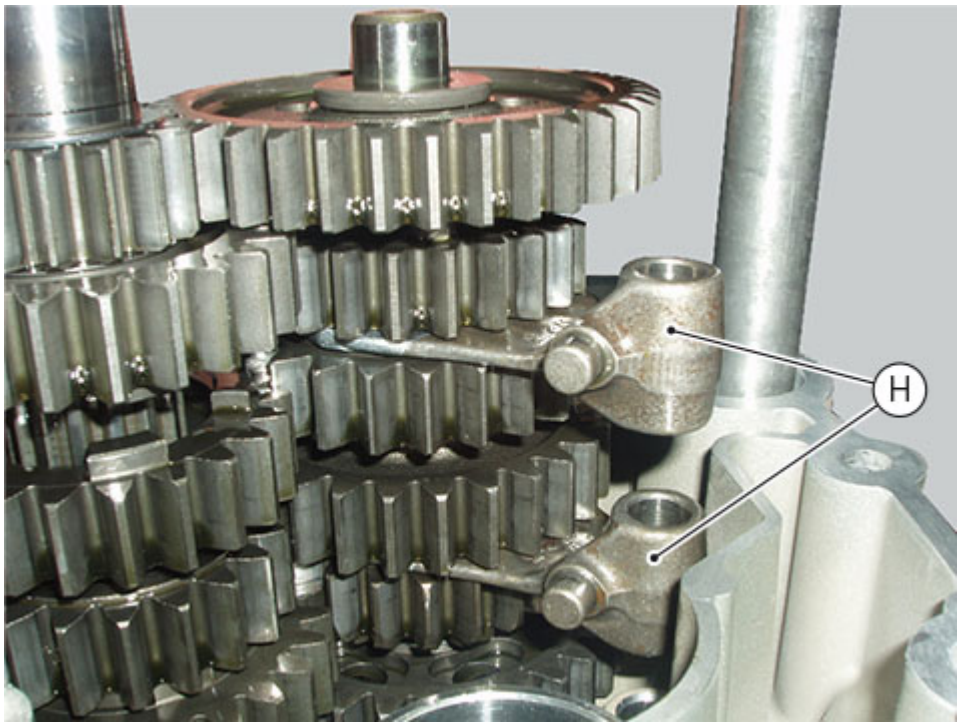
H

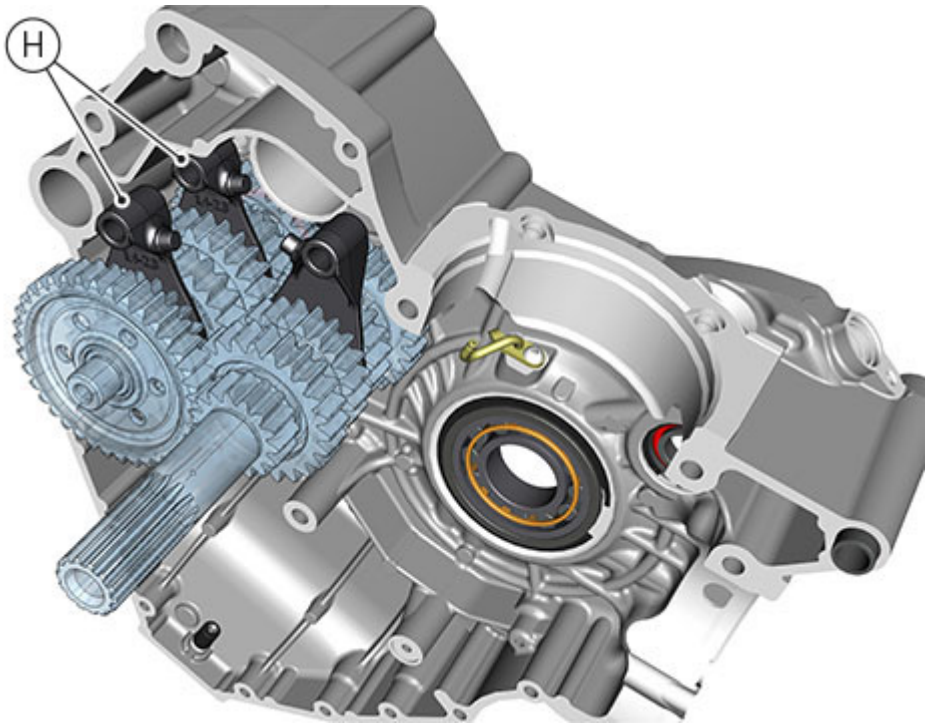
H

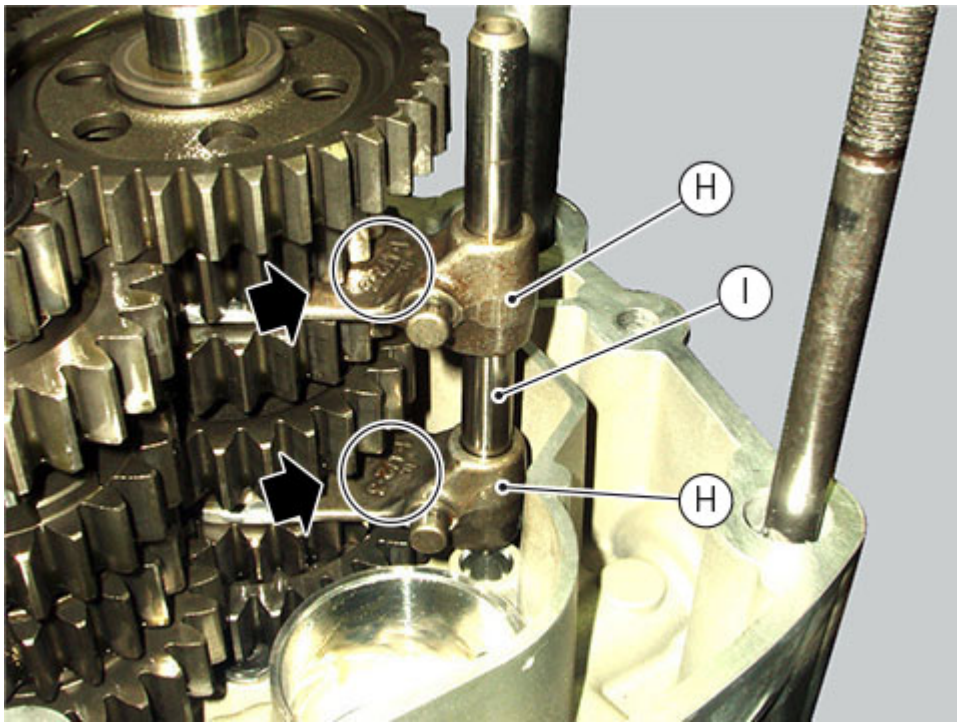

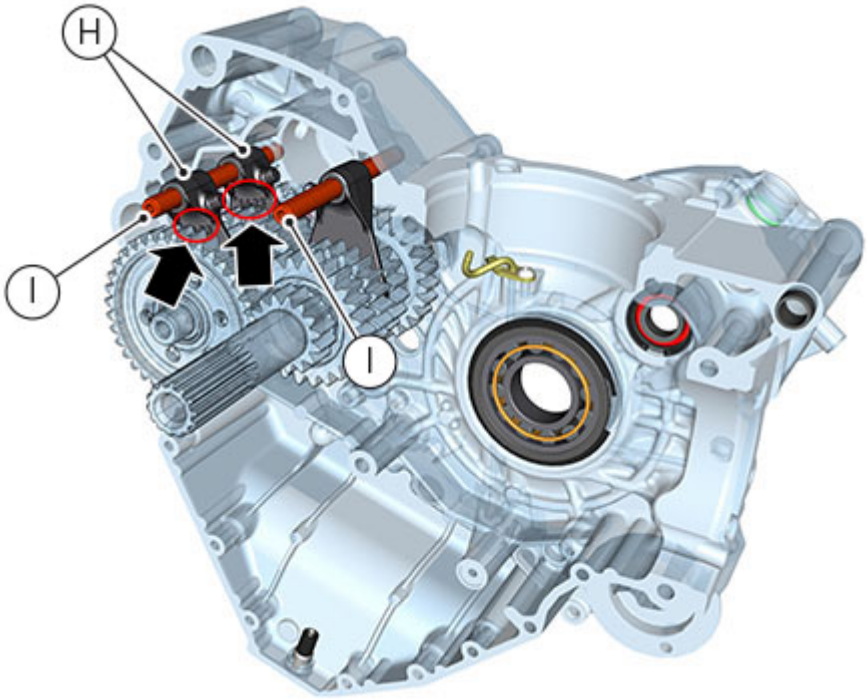

Insert the fork of 5th - 6th speed (L) in the primary shaft driven gear and the pin (I) in the fork (L): the fork must be fitted with the number indicating the gear facing the crankcase half.

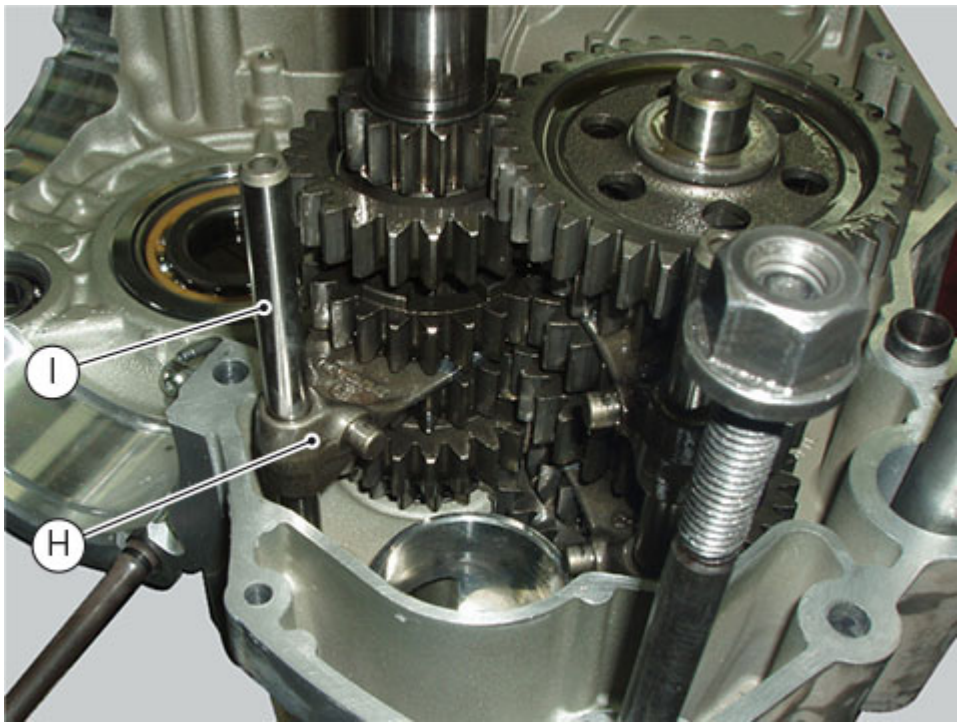
I
H

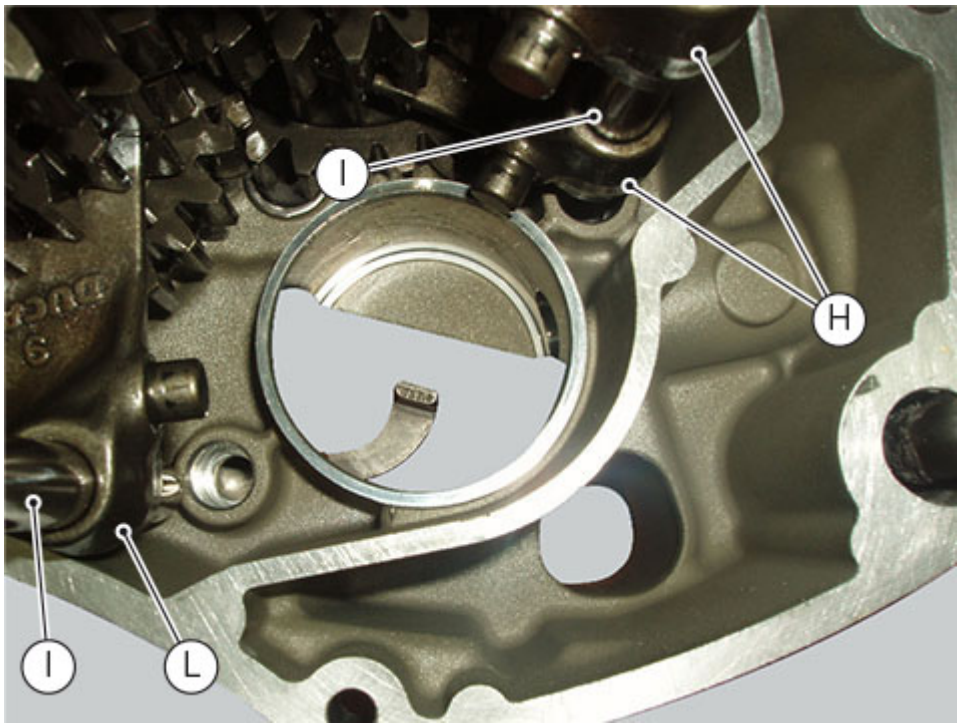
I
H
I
L

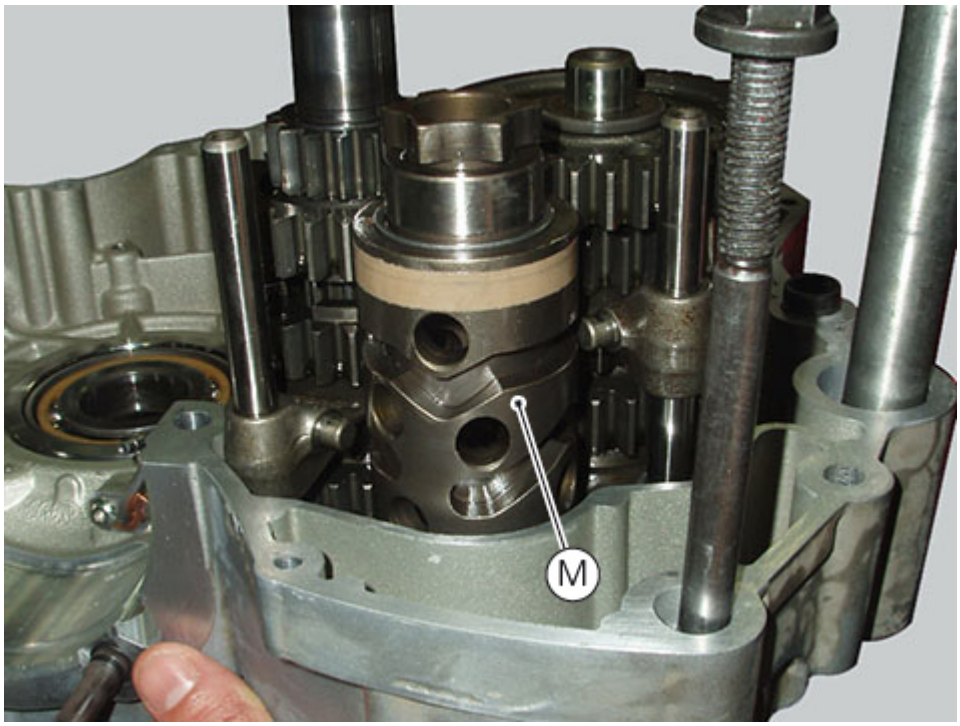

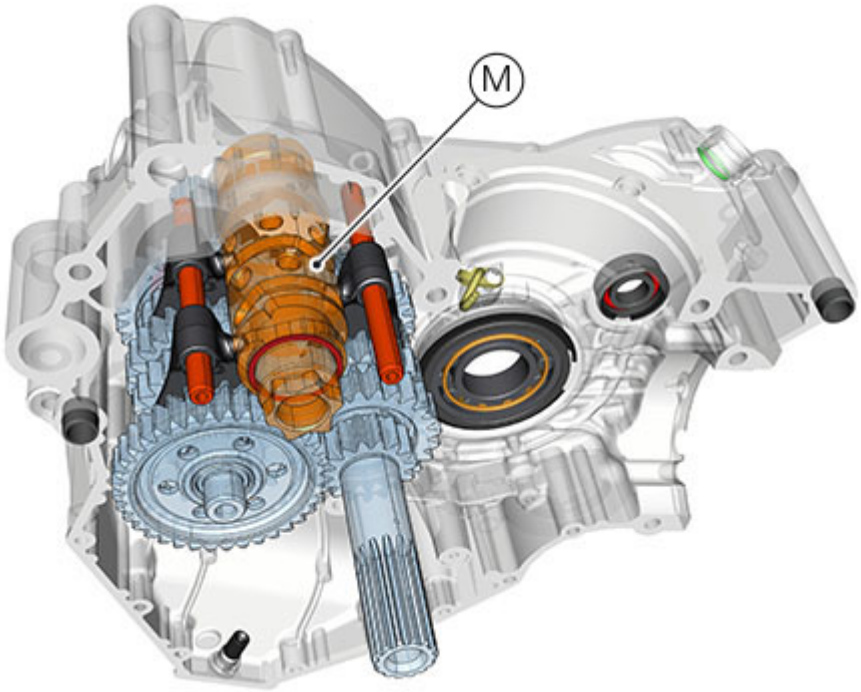

Position the pin (I) of the forks (H) in the crankcase half.
Holding the gear lever pawl, position the gear selector drum (M) in the crankcase half.
Position the pin (I) of the fork (L) in the crankcase half.

Install the crankcase with calculated shims in the crankcase half bearing: the shims (P) of the shaft must be placed with the chamfering facing the shaft.
Position the connecting rods (Q) matching the corresponding seats of the cylinders.

Important

Make sure that the connecting rods are correctly positioned in the relevant cylinder seats. Incorrect positioning of the connecting rods at this stage will inevitably lead to the need to re-open the crankcase halves.

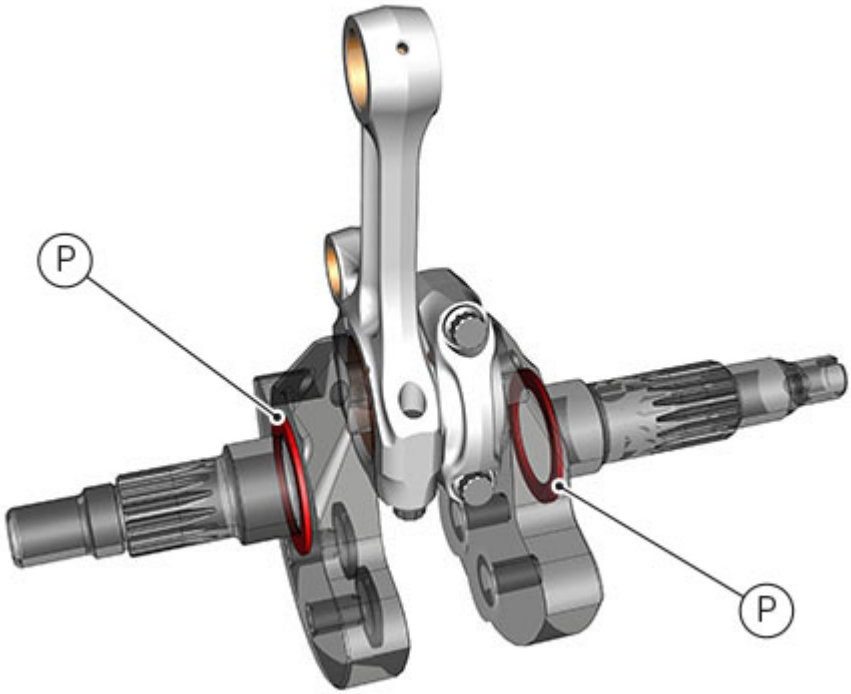
P
P

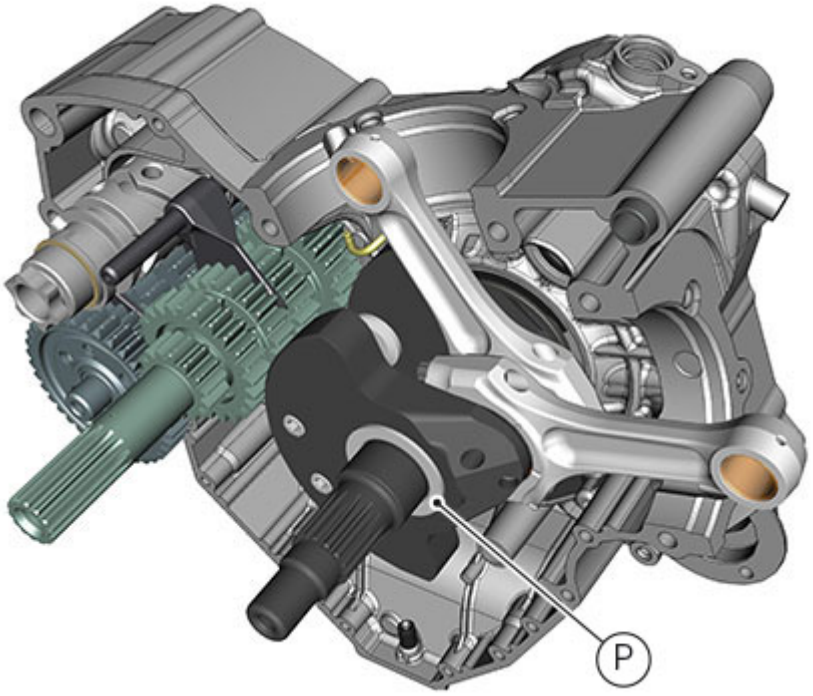
P

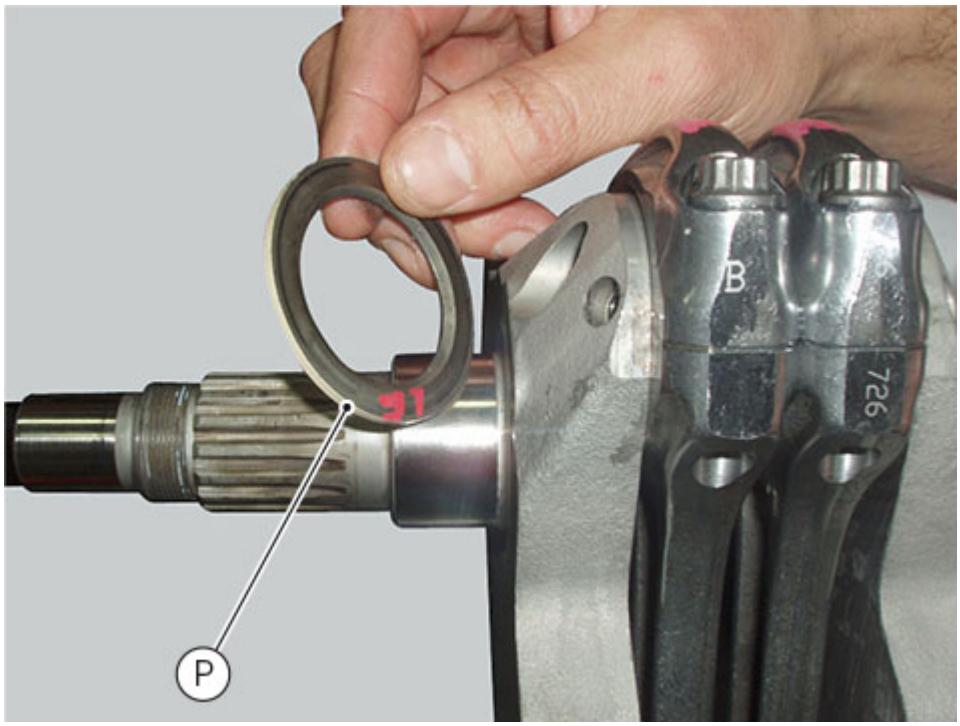
B
726
P

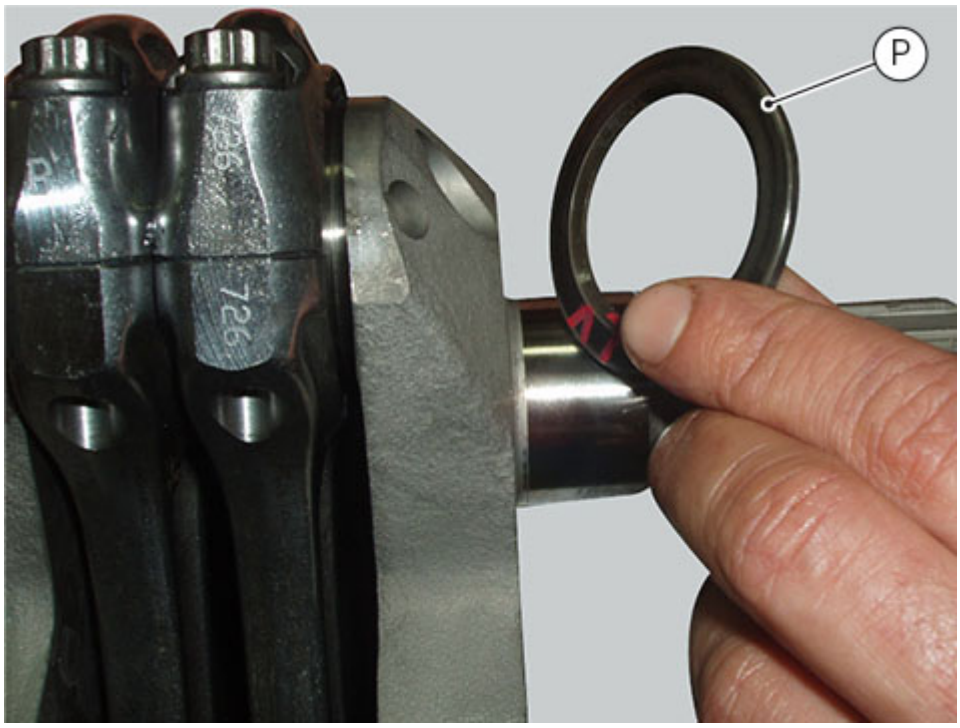
P
726

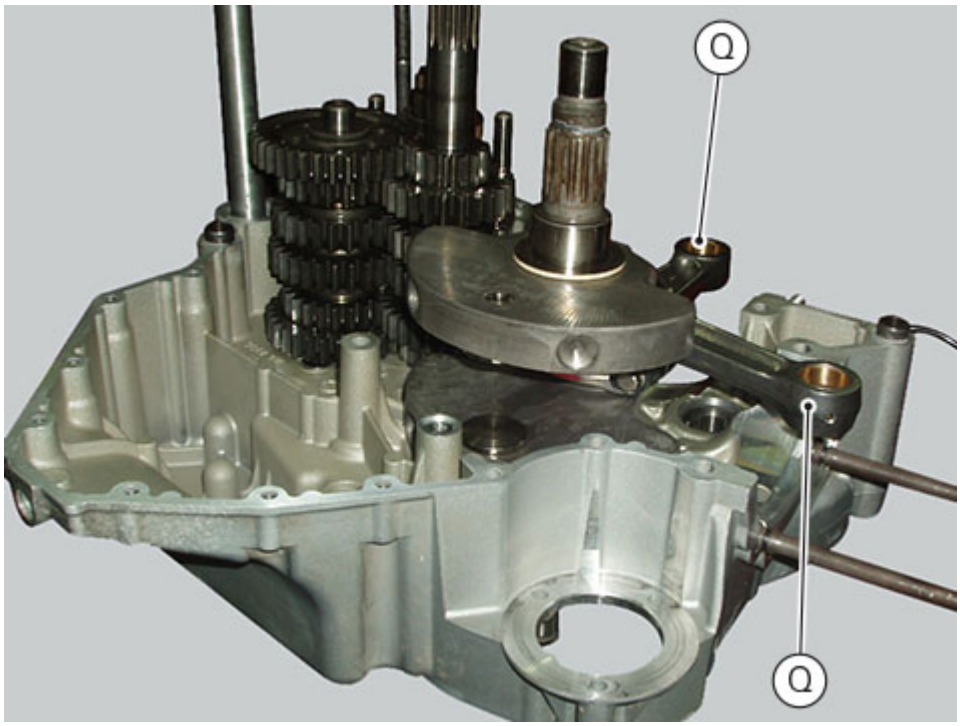

Important

Before installing the crankshaft it is necessary to grease the sliding tracks with the recommended product in order to avoid the seizure of the crankshaft on the bearings.



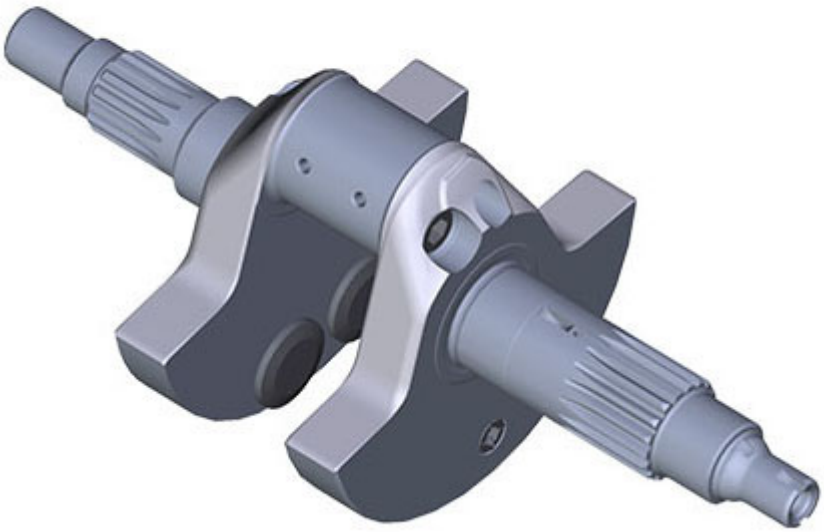

Check that the two centring bushes (13) are correctly fitted.
Grease the O-ring (18) to hold it in position and install it.

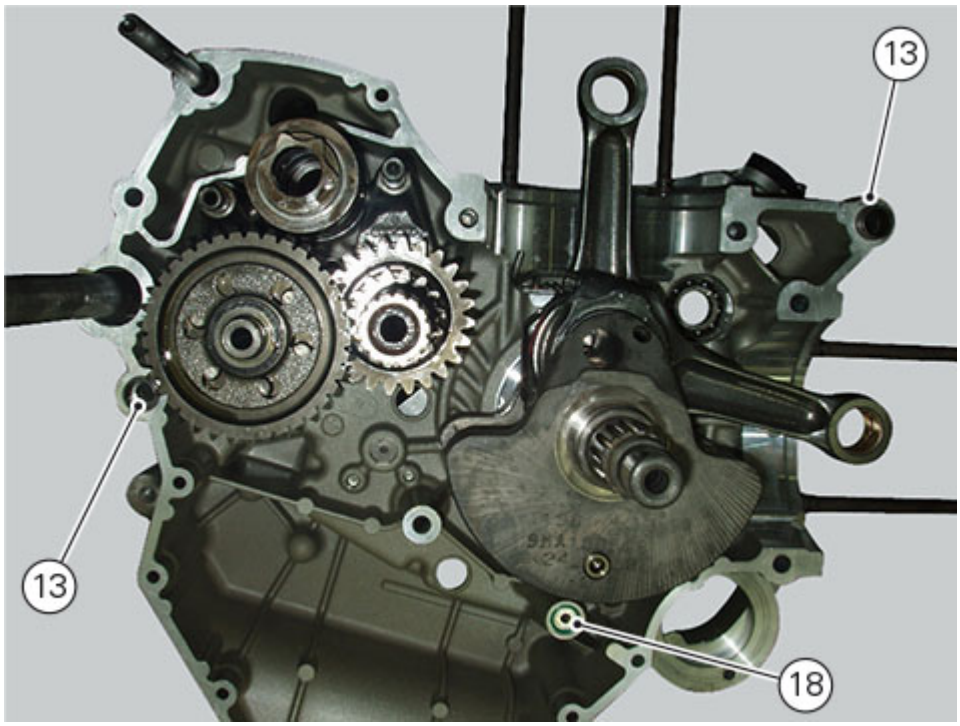

Apply an even and continuous bead of DUCATI sealing compound (R) to the mating surfaces of the crankcase halves, going around all the holes as shown in the figure.

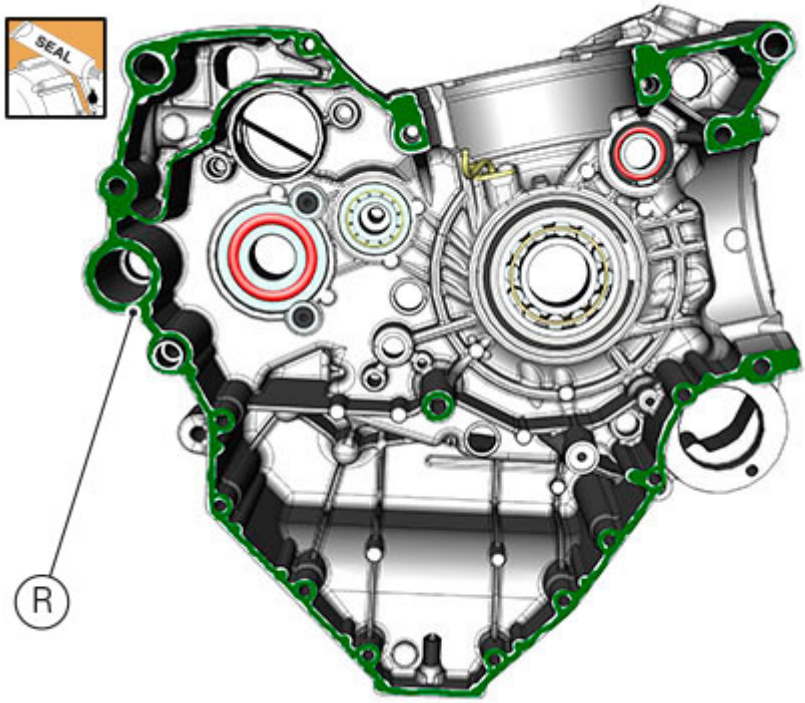

Bring the crankcase halves (15) and (16) together, tapping with a rubber mallet in the area of the shafts if necessary.



Prepare the fastening screws by lubricating them (if specified in the table) with the specified product, and start them on crankcase halves, paying attention to the different lengths, starting from the larger ones (M8) and following the specified sequence.

Reference	Quantity	Screw description (Product)
1-2	4	M8x90 mm screws (GREASE C)
3	2	M6x75 mm screws
4	3	M8x75 mm screws (GREASE C)
5	3	M6x35 mm special screws
6	5	M6x35 mm screws

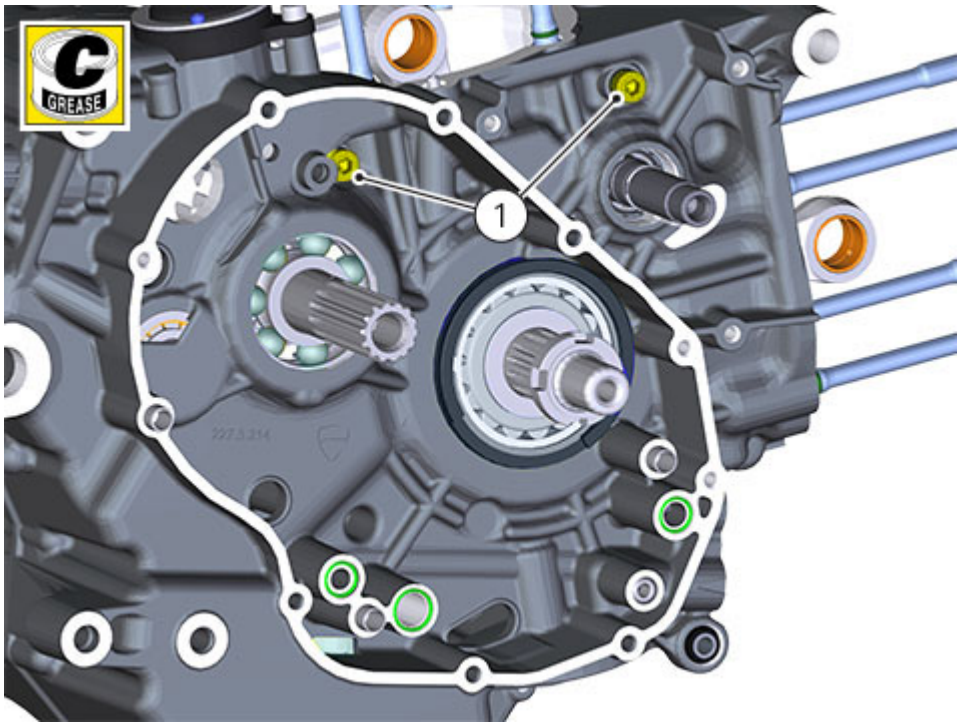

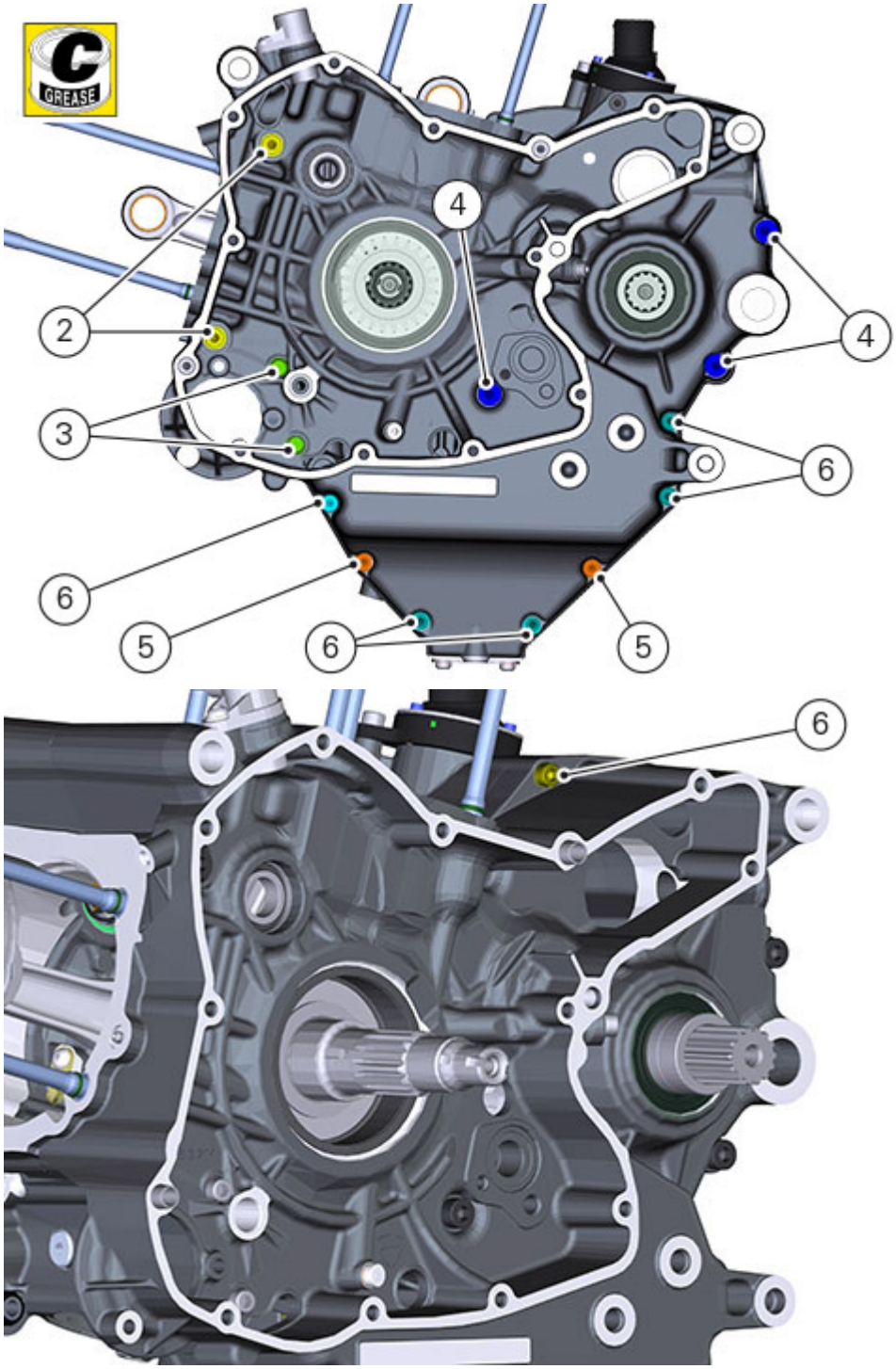

Tighten all screws to the specified torque after applying specified grease or threadlocker, in the following sequence:

- screws (2) and (4) with specified threadlocker to a pre-torque of 19 Nm (Min. 17 Nm; Max. 21 Nm);
- screws (1) with specified threadlocker to a pre-torque of 19 Nm (Min. 17 Nm; Max. 21 Nm);
- screws (1) to a torque of 25 Nm (Min. 22 Nm; Max. 28 Nm);
- screws (2) and (4) to a torque of 25 Nm (Min. 22 Nm; Max. 28 Nm);
- screws (3), (4), (5) and (6) to a torque of 10 Nm (Min. 9 Nm; Max. 11 Nm)

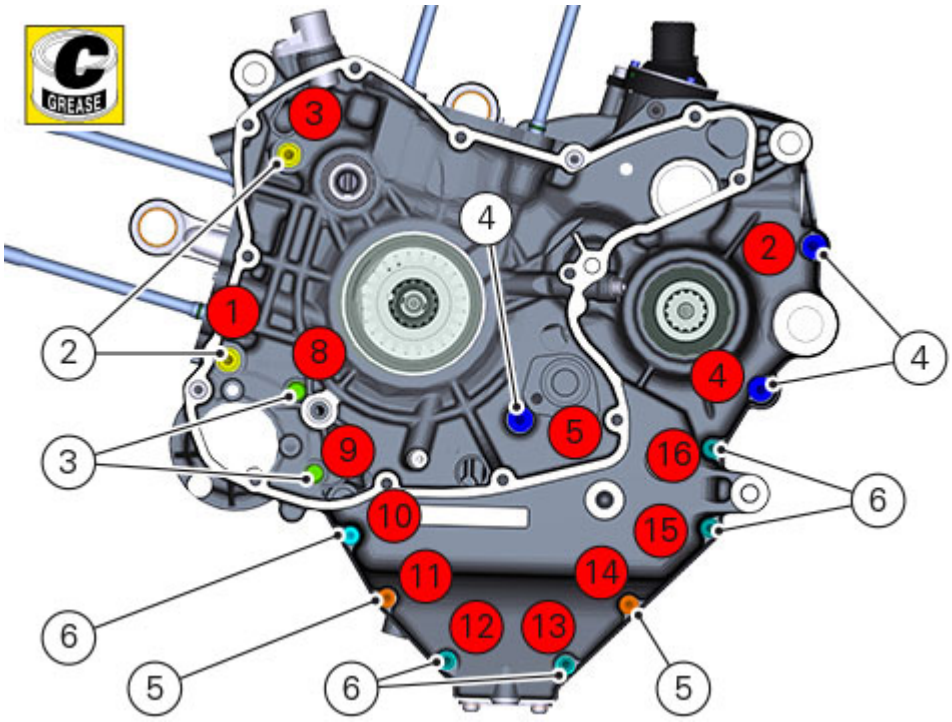
GREASE
1
2
3
4
5
6
8
9
10
11
12
13
14
15
16

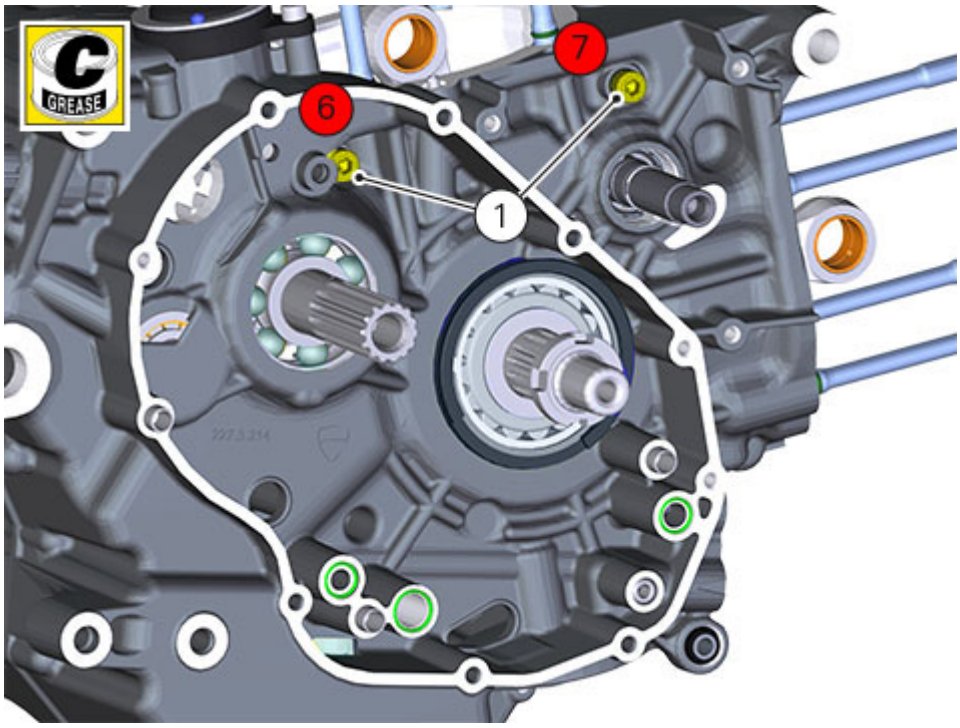
GREASE
1
6
7

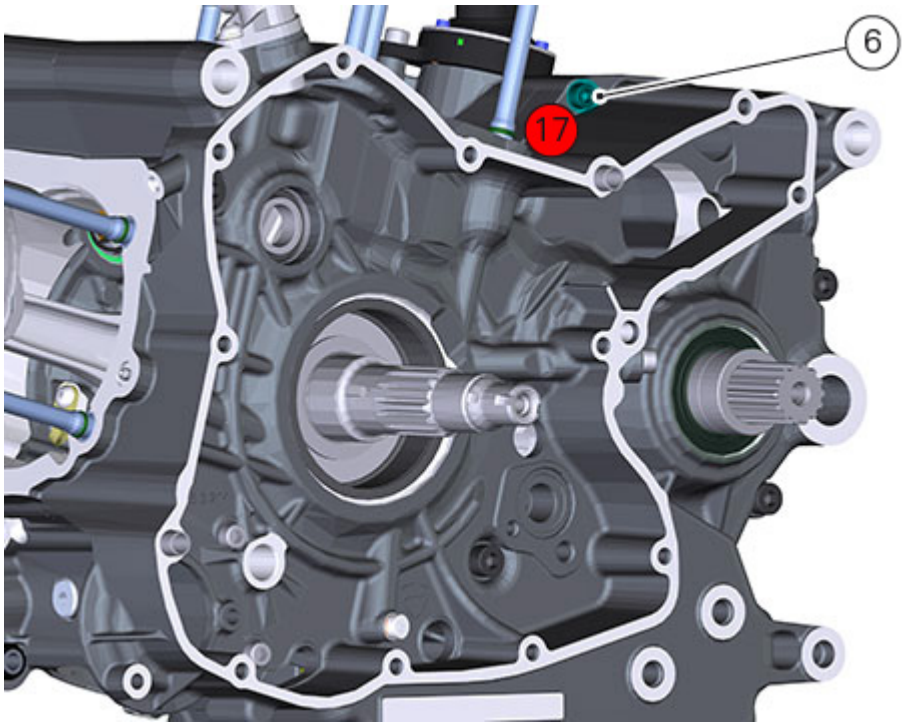

Check that the crankshaft (A) can be turned with a certain amount of interference with the main bearings (the crankshaft should have a pre-load of 0.20 to 0.30 mm); check also that all the parts you have fitted are free to rotate or move correctly.
Install the mesh filter cover (Changing the engine oil and filter cartridge).
Install the cartridge filter (Changing the engine oil and filter cartridge).
Fit the sealing ring (19) on the gearbox secondary shaft with side (N) to the engine side.

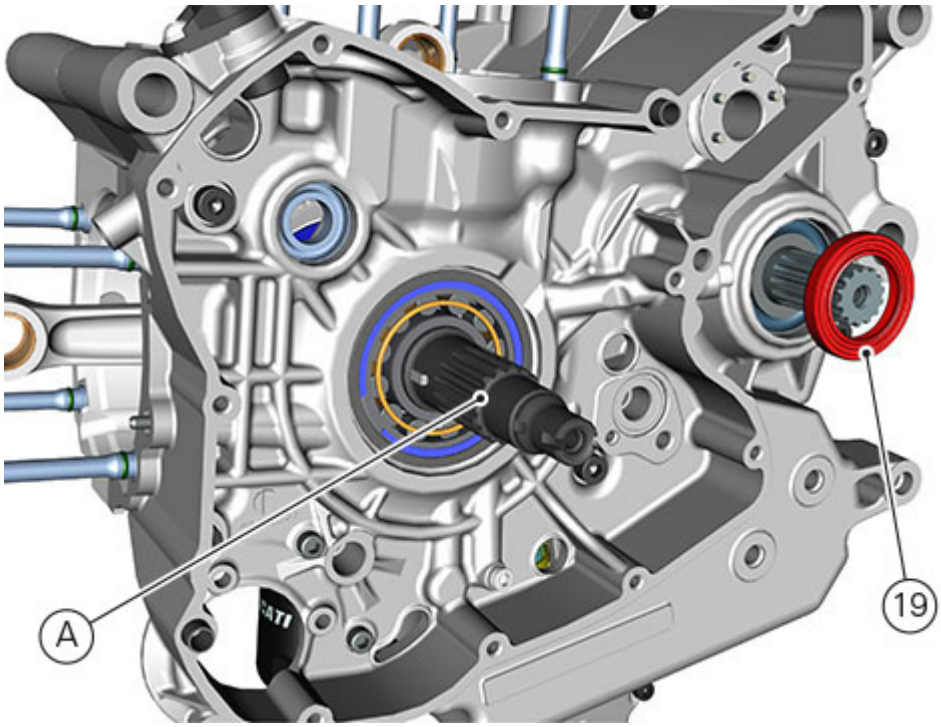

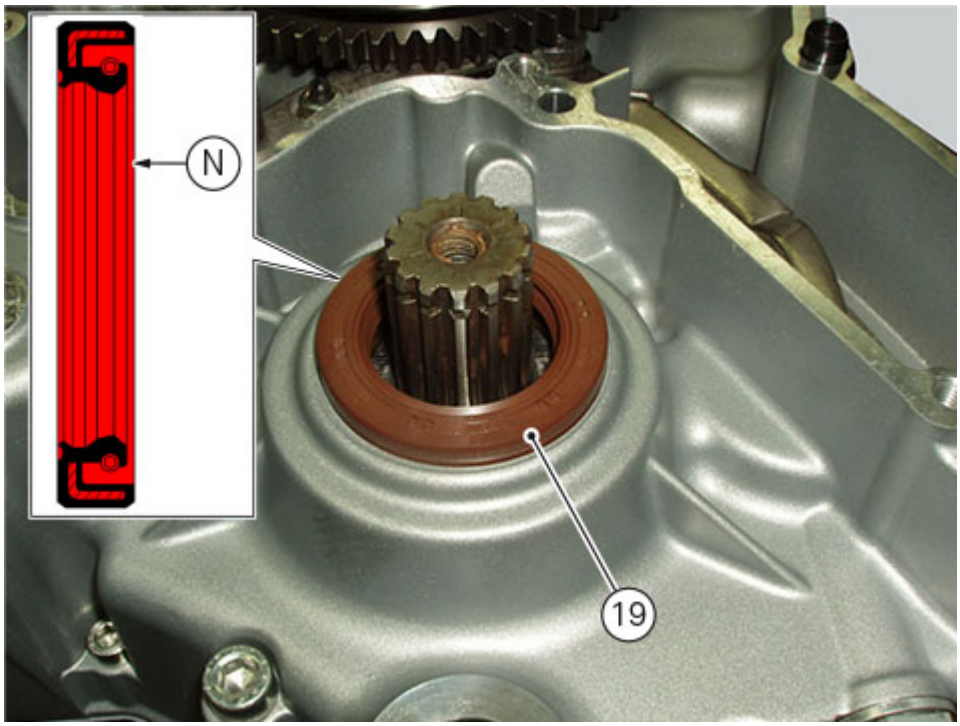

Install the bush of the tool (Y) part no. **88713.2060** on the secondary shaft. Lubricate the new ring (19) and seat it.
Using the drift, drive the sealing ring fully against the crankcase bearing.

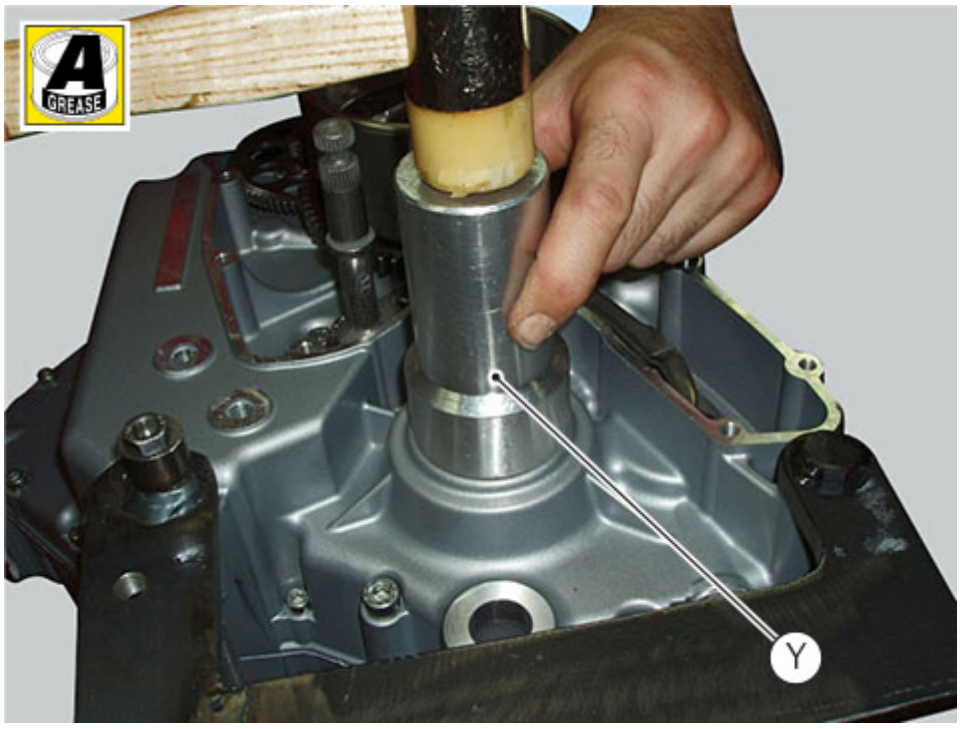

Insert the silent block (21) on the clutch side crankcase half, respecting the indicated value.

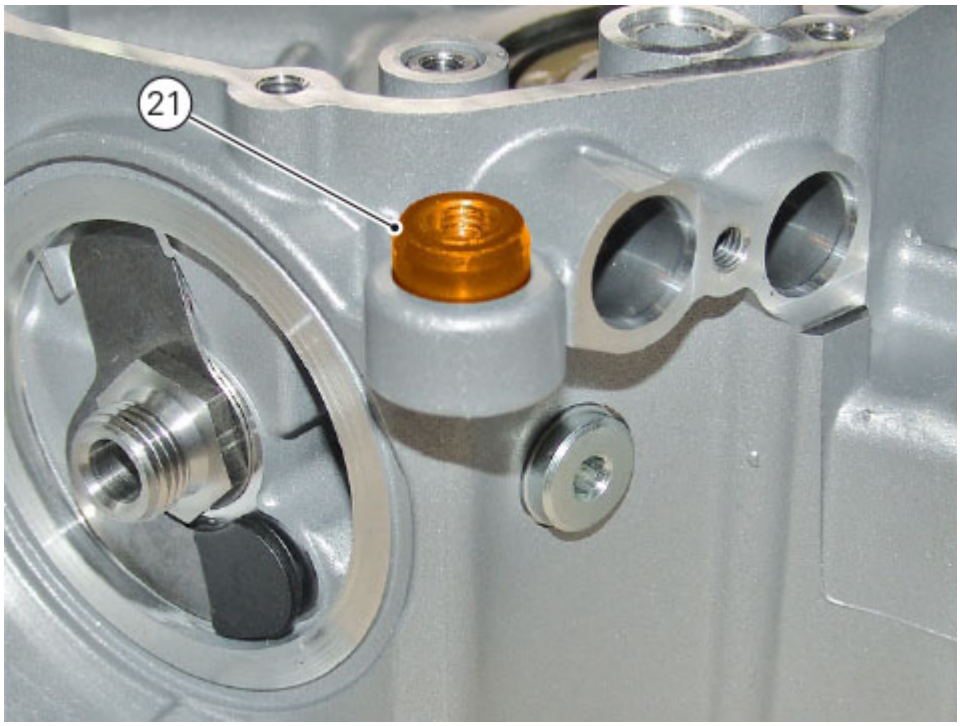

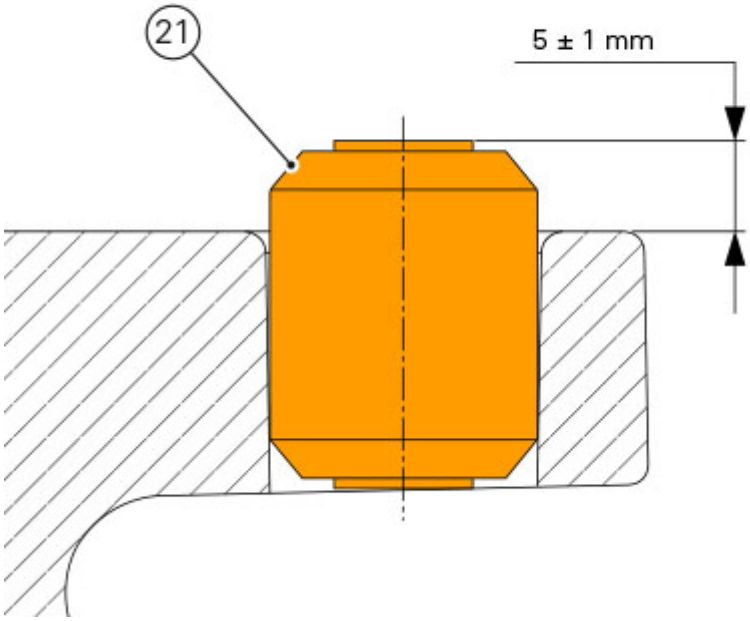

Refit the mesh filter (Changing the engine oil and filter cartridge).
Refit the primary drive gear (Refitting the primary drive gear and checking backlash).
Refit the oil pump (Refitting the oil pump).
Refit the clutch unit (Refitting the clutch).
Refit the clutch cover (Refitting the clutch cover).
Refit the starter motor (Refitting the starter motor).
Refit the complete cylinder/piston assembly (Refitting the cylinder/piston assembly).
Refit the camshaft assembly (Refitting the camshafts).
Refit the complete cylinder head assembly (Reassembling the cylinder head).
Refit the mobile tensioner and the timing belts (Refitting the timing belts).
Refit the timing system components (Refitting the cylinder head pulleys/fixed tensioners).
Refit the generator assembly and the generator side cover (Refitting the flywheel/generator assembly).
Fit the engine on the frame (Refitting the engine).

Shimming the shafts

Before assembling the crankcase halves, it is necessary to check the shims of the crankshaft and of the gearbox shafts.

Crankshaft shims

The following shims are supplied as spare parts.

Position	Clutch side (mm)	Chain side (mm)
Crankshaft	2.05	2.05

After having installed the new main bearings (with bush (A) or flanged bearings (B)) proceed as follows to determine the total "SA" height of the shimming:

Gearbox shaft shims

The following shims are supplied as spare parts.

Position	Clutch side (mm)	Chain side (mm)
Gearbox primary shaft	1.2	1.6
Gearbox secondary shaft	3.15	0.8

Gearbox selector drum shims

The following shims are supplied as spare parts.

Position	Clutch side (mm)	Chain side (mm)
Gear shift drum	1.0	0.9

Reassembling the crankcase halves

The crankcase halves must be in good condition and perfectly clean. The mating surfaces must be perfectly flat and free from burrs.

Reassembling the clutch side crankcase half

The following parts must be present on the internal side of the crankcase half (1):

- the secondary shaft bearing (11); apply grease on the bearing rollers. Drive the inner race (L), removed previously, fully home in the bearing. Apply grease to the inner race;
- the primary shaft bearing (5), secured with the screws (8) and the retaining spacers (7); apply recommended threadlocker to the screws (8), and tighten to a torque of 10 Nm (Min. 9 Nm - Max. 11 Nm);
- Fit the main bearing (3) with the corresponding bush (2) and the internal snap ring.

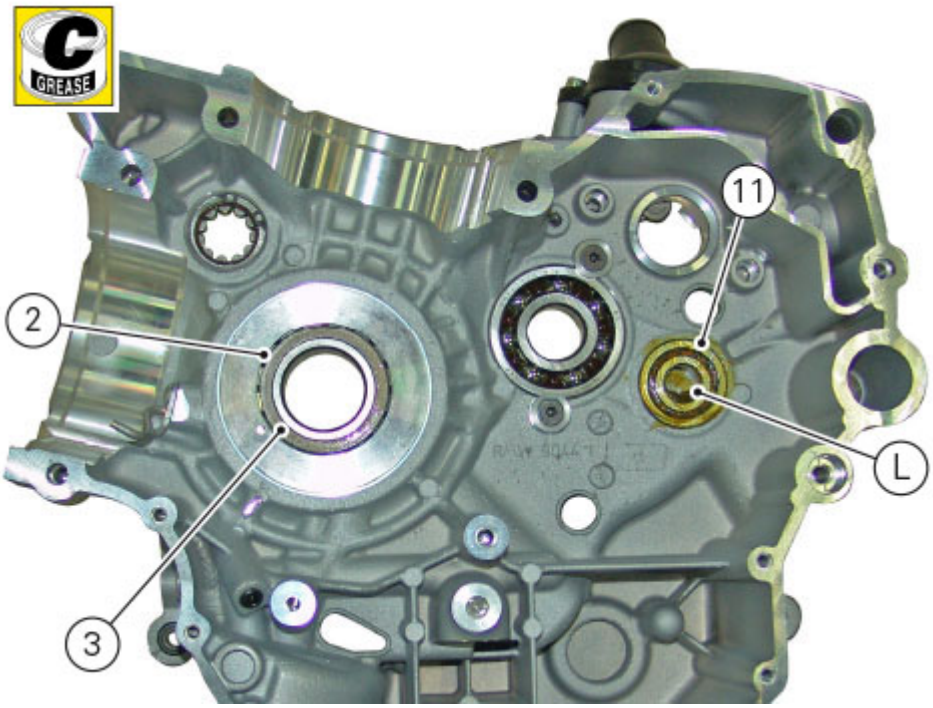

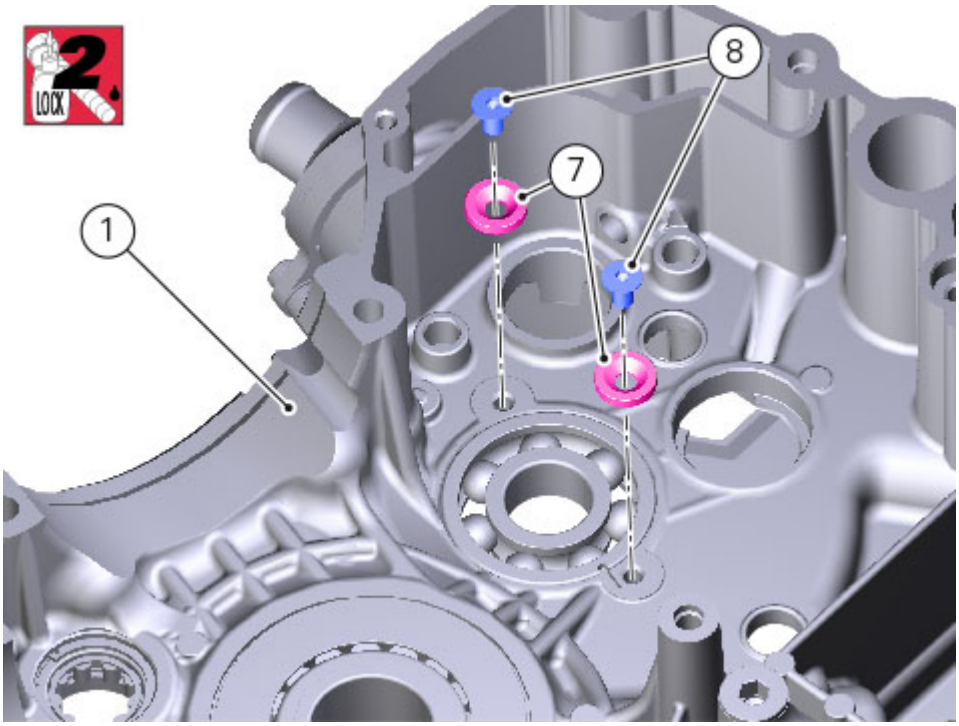

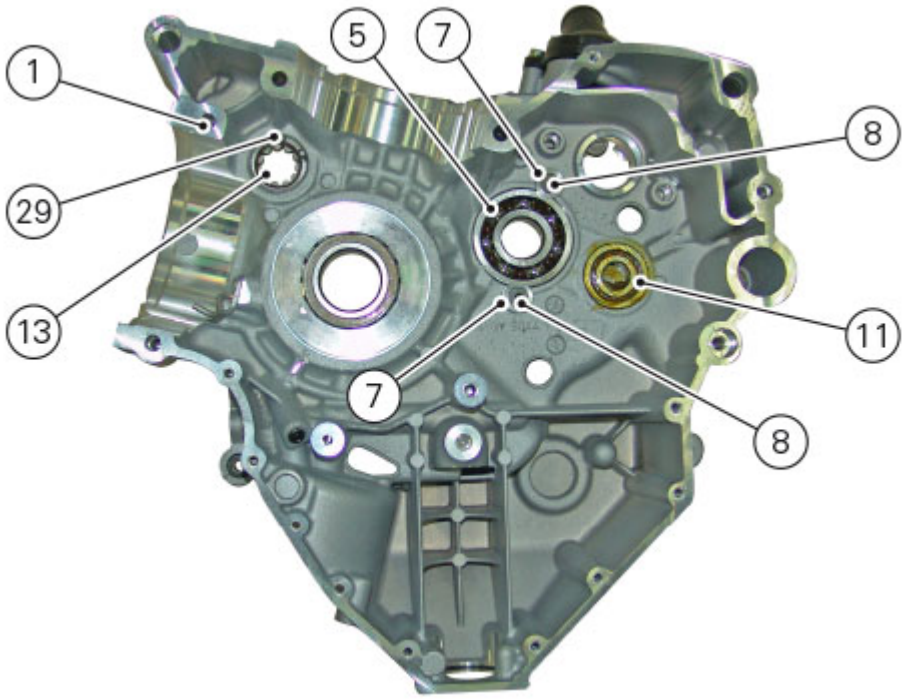

Fit a new O-ring (33) in the oil filter cartridge seat.

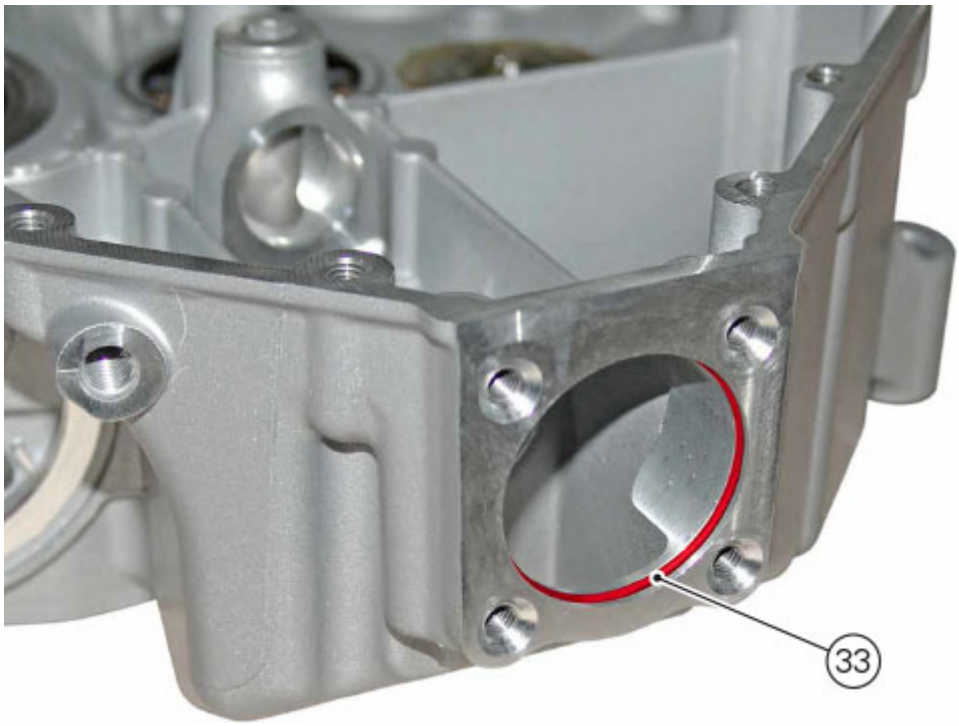

The roller bearing (13) with circlip (29) installed in correspondence with the timing layshaft.
Insert the circlip (29) in the crankcase half installing it in its seat on the bearing.



Reassembling the generator side crankcase half

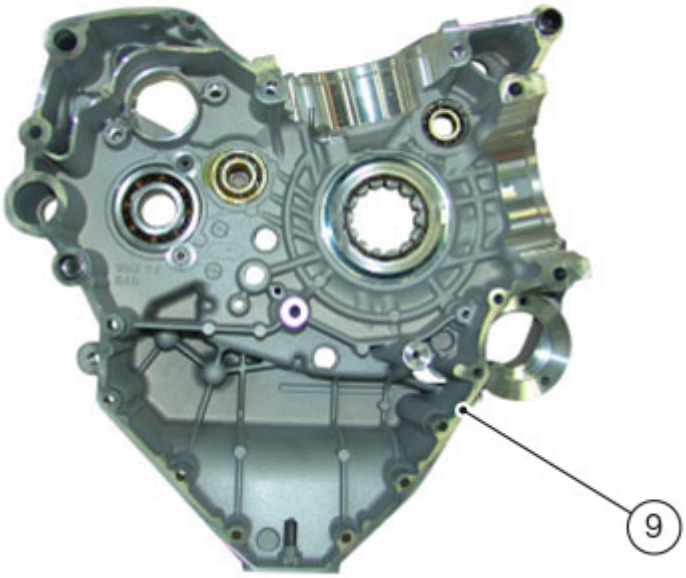

If previously removed, replace the oil seal (34) after lubricating the new one with the specified product using a suitable drift.
Fit the oil seal fully home.

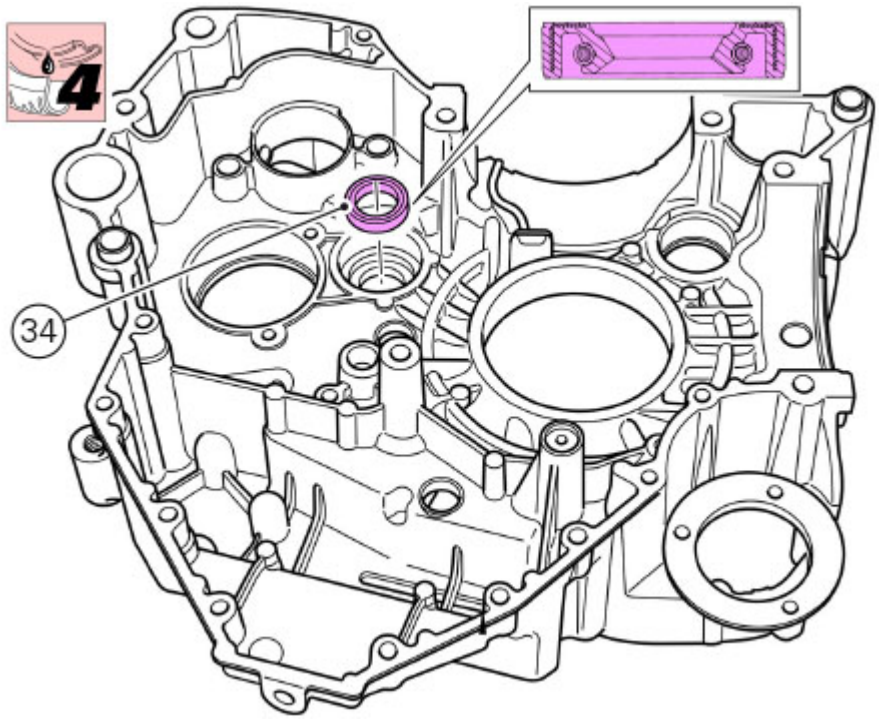

The double race ball bearing (6) supporting the selector fork shaft shall be present on the inner side of crankcase half (9).
Apply threadlocker to the screws (12).
Fit the two spacers (7) to the gearbox secondary shaft bearing (6) starting the screws fully into the crankcase half (9).

Tighten the screws (8) to a torque of 10 Nm (Min. 9 Nm - Max. 11 Nm).

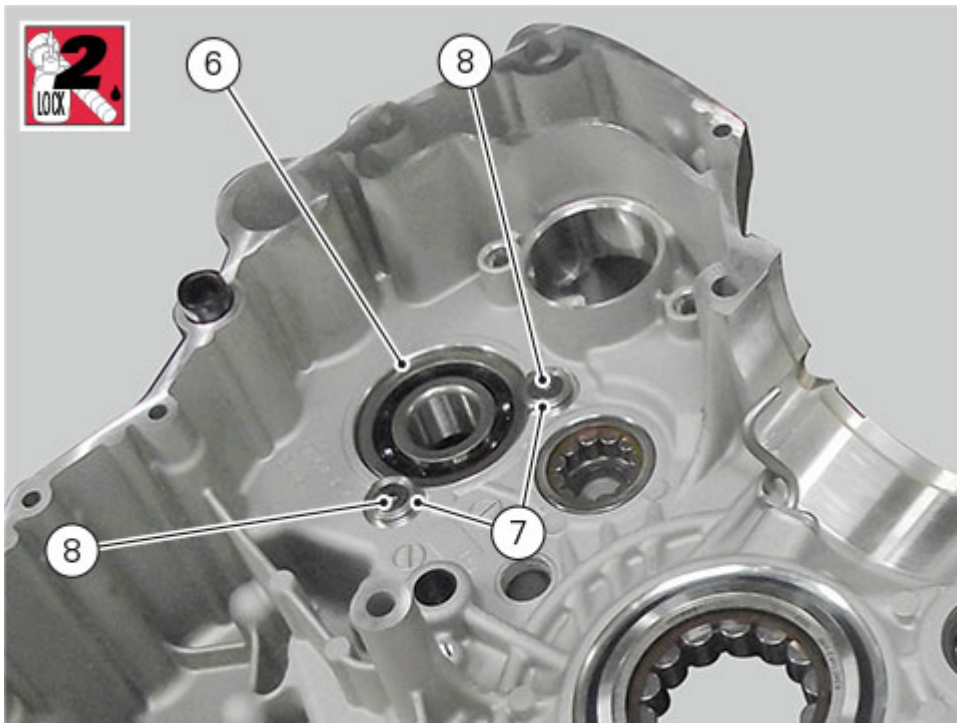

The primary shaft end bearing (10) with the internal spacer (14), oriented so that the closed side of the plastic roller cage (B) faces the crankcase half: apply grease to the bearing rollers.
Fit the inner race (A) removed previously from the bearing, fully home on it.
Apply grease to the inner race.
The main bearing (24) with the relevant bush (25).

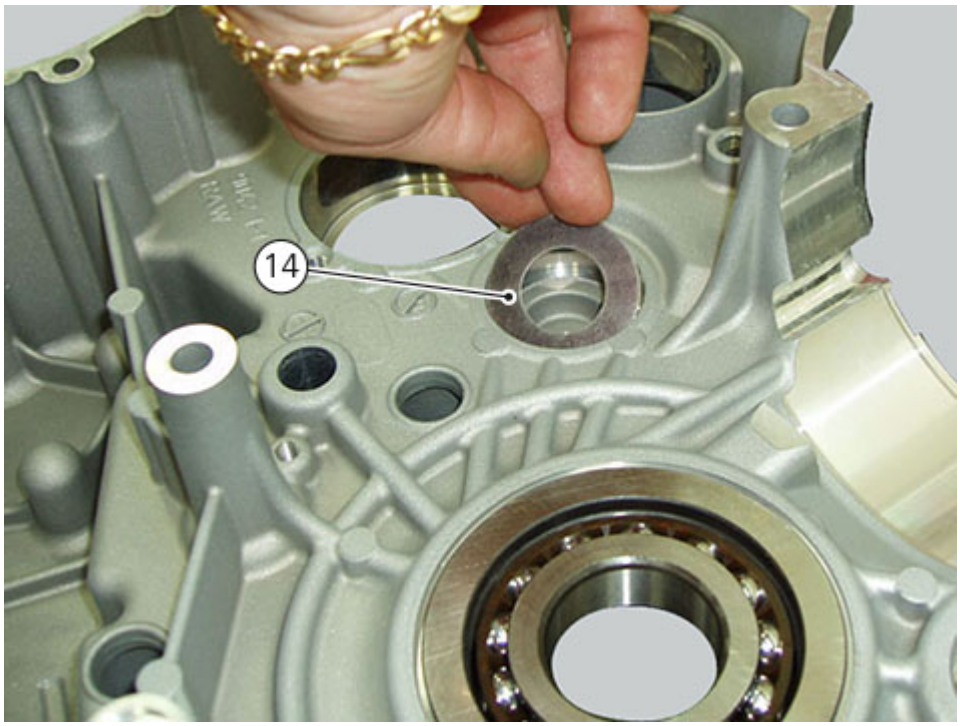

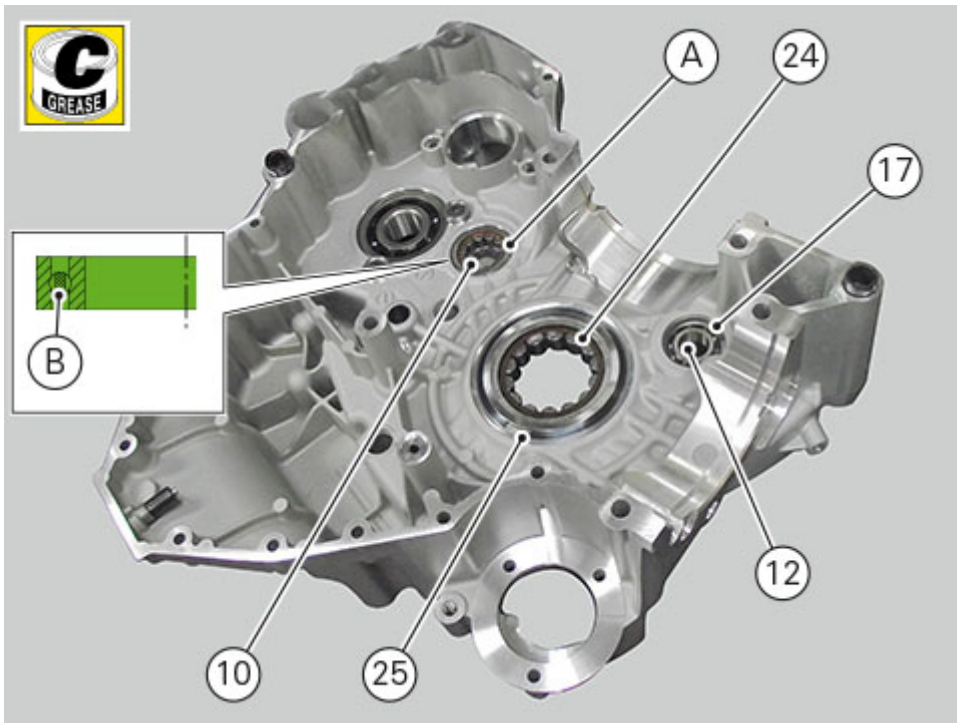

Fit the bearing (12) with the retaining circlip (17) installed in correspondence with the timing layshaft.
Insert the circlip (17) in the crankcase half installing it in its seat on the bearing (12).

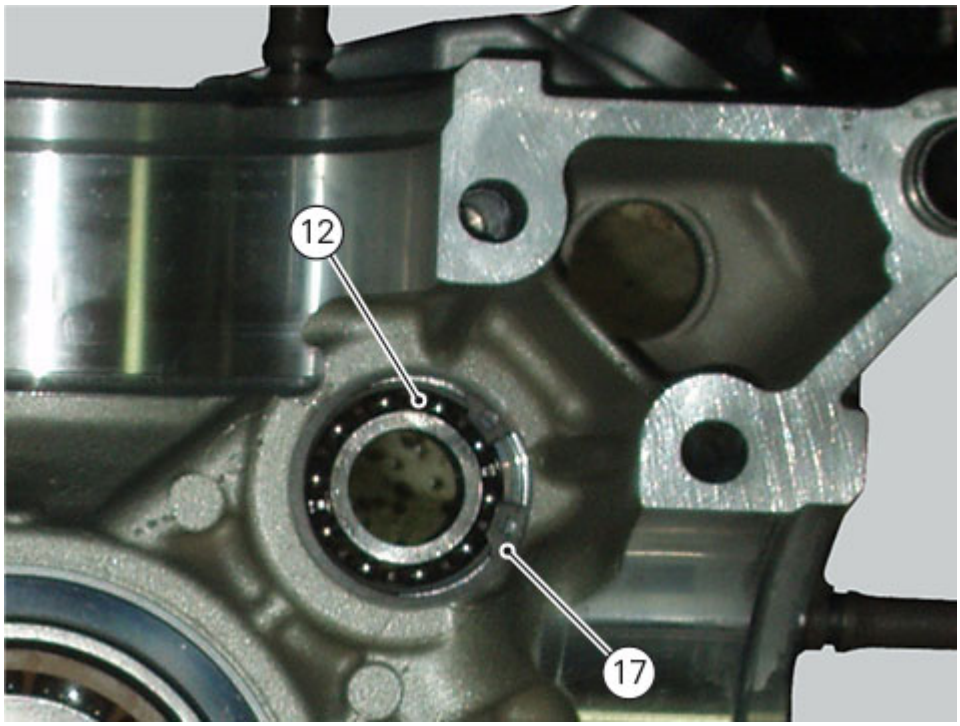

Note

Bearings do not have a specific mounting position (except main bearings), however it is good practice to install the bearings so that the written side is facing upwards.

Fit seal (37) on the drain plug (38), with the sharp edge facing towards the chain side crankcase half, after applying the specified sealing compound.
Tighten plug to a torque of 20 Nm (Min. 18 Nm - Max. 22 Nm).



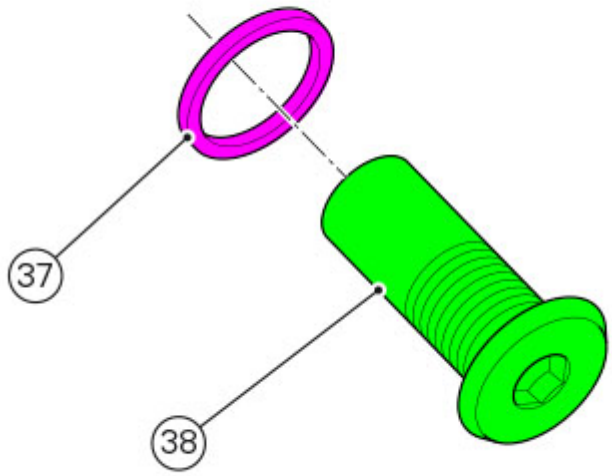

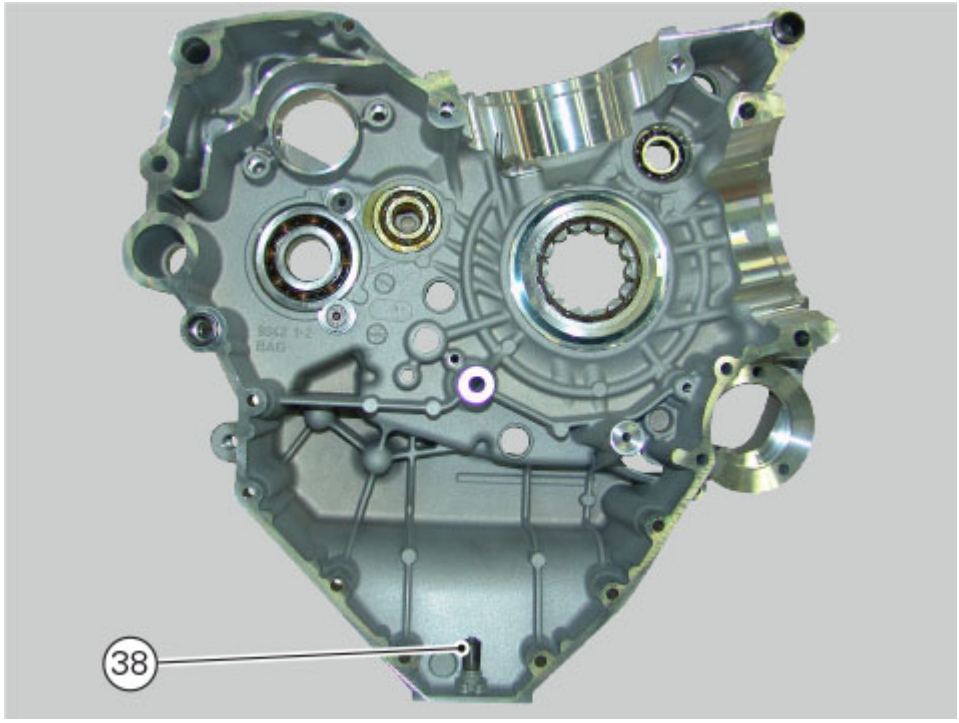

Fit the mesh filter as described in section "Changing the engine oil and filter cartridge".

Important

To avoid damaging the filter, insert it by hand only. Do not use hammers or other metal tools.

Above the mesh filter seat there is a plug (19) which closes off the oilway.
If it is to be replaced, apply the recommended sealant (20) to its thread.
Tighten the plug to a torque of 24 Nm (Min. 21 Nm - Max. 27 Nm).

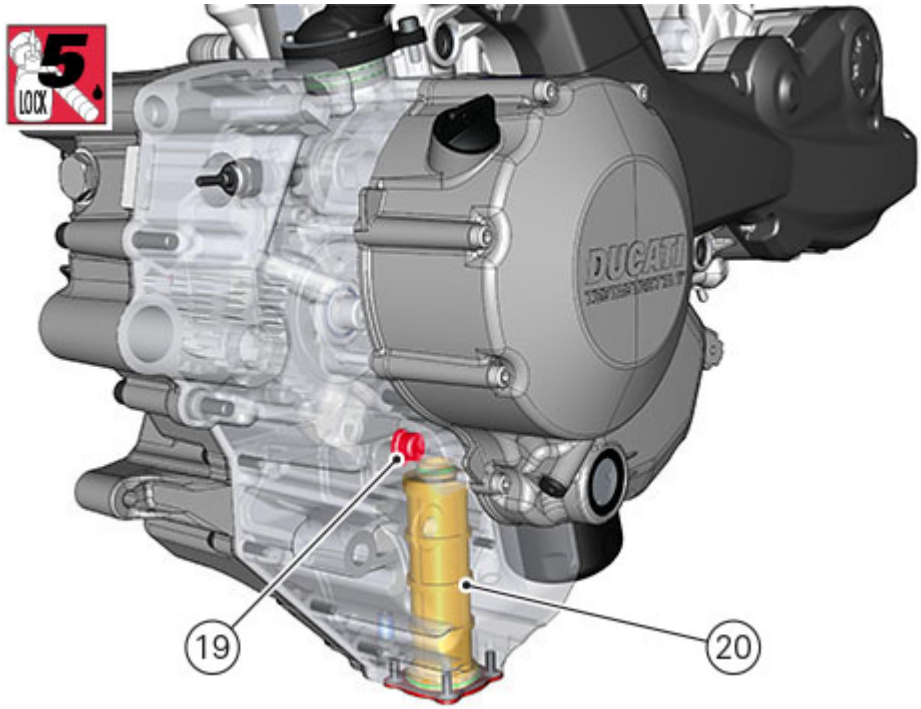

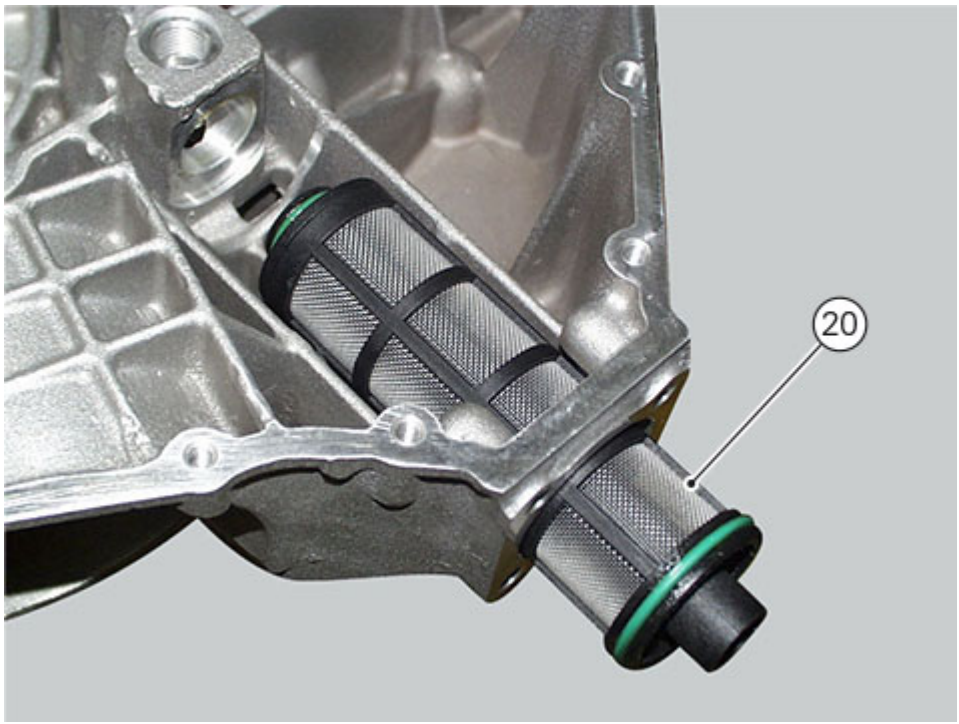

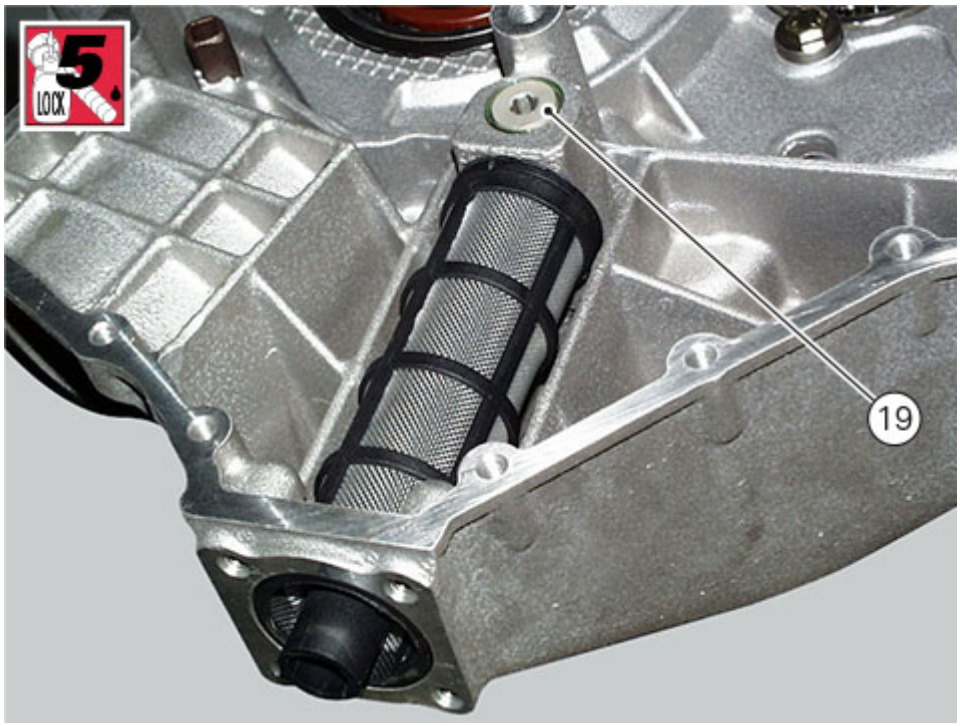

If previously removed:
- fit O-ring (30) in the seat on the clutch side casing.
- Refit the oil squirter (31) on the crankcase half, by inserting the end (B) of the squirter in the O-ring (30) and bringing it fully home.
Align hole (C) with threaded hole (D) on the crankcase half.
Apply specified threadlocker on screw (32) and tighten it to 8 Nm (Min. 7 Nm - Max. 9 Nm).

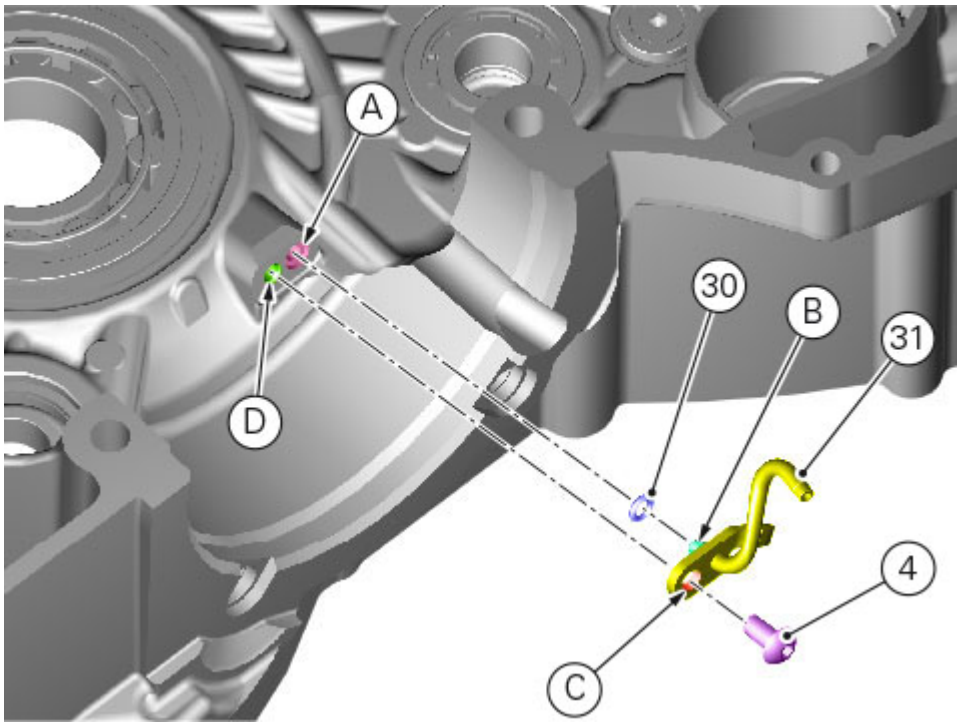

Position the closing plate (33) and after applying the specified threadlocker, tighten screws (35), with washers (36), to a torque of 10 Nm (Max. 11 Nm - Min. 9 Nm).

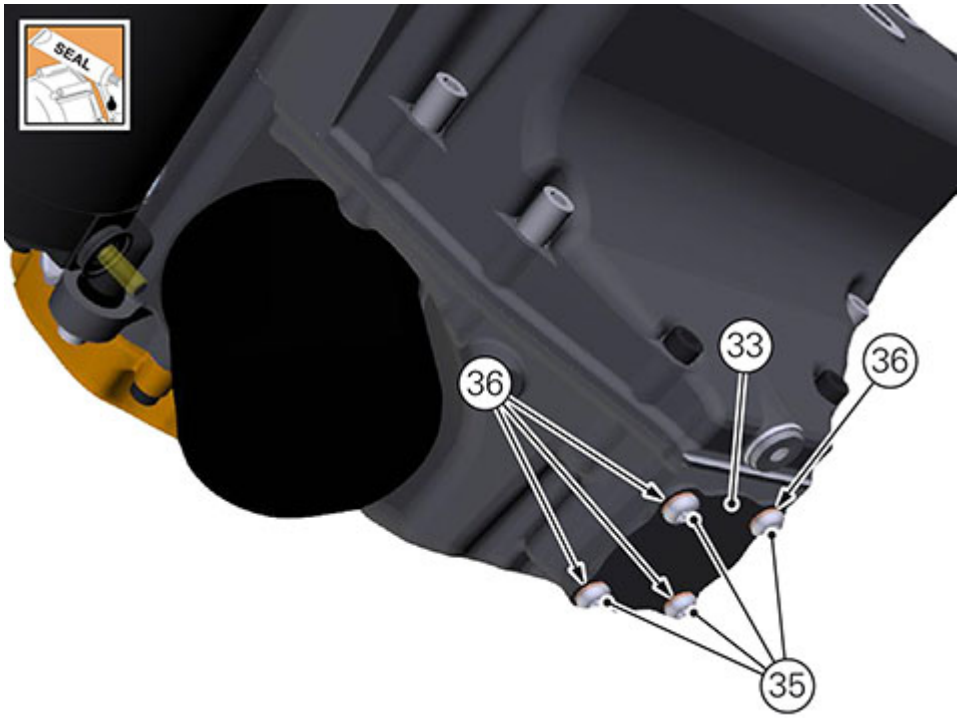

Main bearings

To replace the bearings proceed as follows:

- heat the crankcase half in an oven to 100 °C;
- remove the bearing using a drift and hammer;
- install the new bearing (while the crankcase is still hot) keeping it perfectly square in its seat using a tubular drift that only bears on the outer ring of the bearing;
- allow the parts to cool and check that the bearing is securely seated in the crankcase half.

Note
Fit all bearings ensuring that the side with marks faces upwards and is fully home on the bush.

CLUTCH-SIDE CRANKCASE HALF

In order to fit the bearings proceed as follows.
To refit the bearing (22), insert the roller bearing (3) so that the side with "marks" faces upwards and is fully home on the bush (2); ensure that the groove (A) is fully visible.
Install the snap ring (4) into the groove (A), locking the roller bearing (3) into the bush (2).

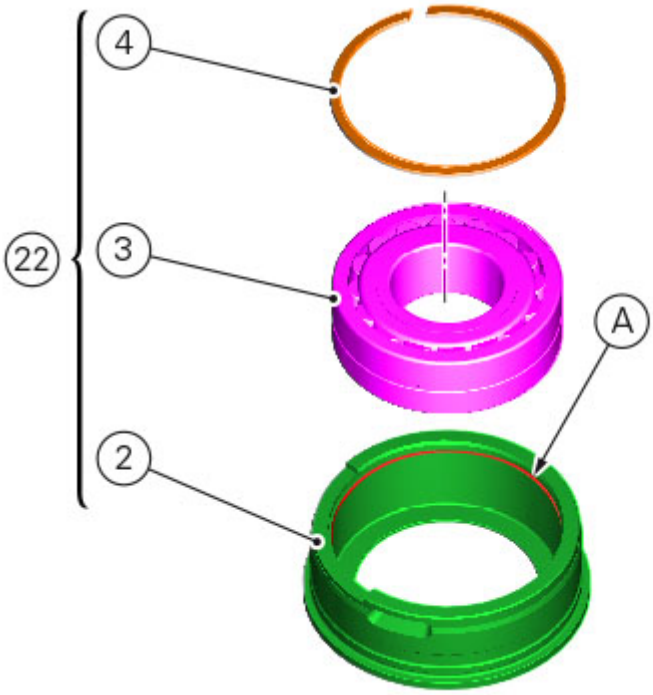

In order to fit the bearing (22) onto the casing (1), heat the clutch side crankcase half (1) at a temperature ranging between 95 °C and 110 °C max., until reaching an even temperature throughout the surface.
Immediately after having heated the crankcase half, fit the bearing (22) in its internal side, aiming it so that the side with "marks" faces the crankcase half and is fully home inside it.
Position the notch (B) that indicates the centre of the slot on the bush, in line with the dowel mounting threaded hole (C).

Note
Keep the press load on the bearings as long as necessary to reach a crankcase half temperature of 50 ± 5 °C.

Note
While keeping the load it is possible to speed up the crankcase half cooling with an air blow at ambient temperature of approximately 20 °C.

Warning
While cooling the crankcase half, the above-mentioned components may move from their fully home position. It is therefore important to keep the components fully home for a time necessary to ensure a sufficient cooling of the crankcase half and thus a definitive fixing of the bearings fully home.

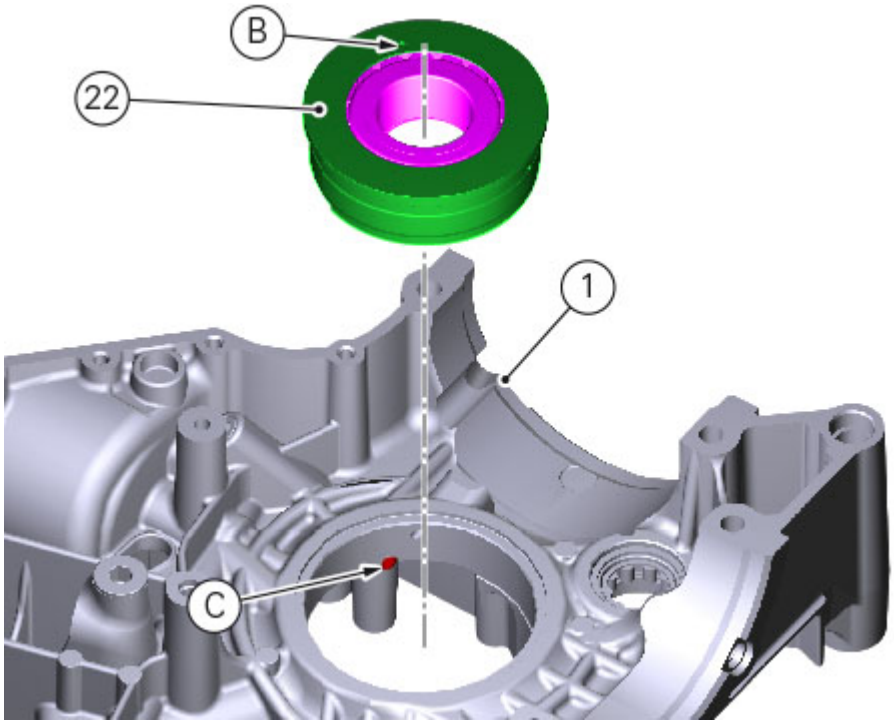

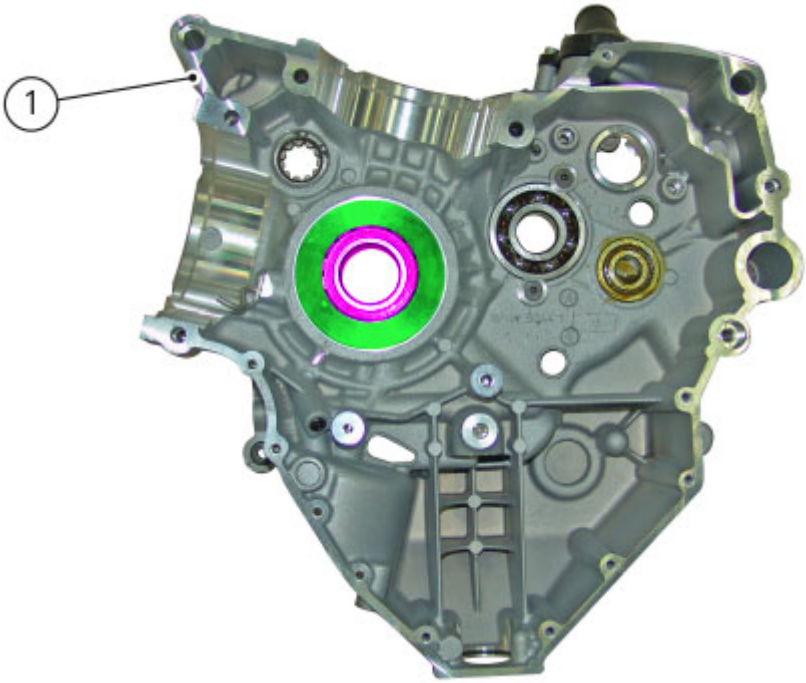

Apply recommended threadlocker to the special dowel thread (5).
Tighten the special dowel (5) on the crankcase half (1) fitting the tapered side (E) inside the slot (D) of the previously installed bush (A).
Tighten the special dowel (5) to a torque of 16 Nm (Min. 15 Nm - Max. 17 Nm).
Apply threadlocker to the dowel thread (6).
Screw the dowel (6) on the crankcase half (1) and tighten it to a torque of 22 Nm (Min. 20 Nm - Max. 24 Nm).
After tightening, remove any excess of threadlocker.

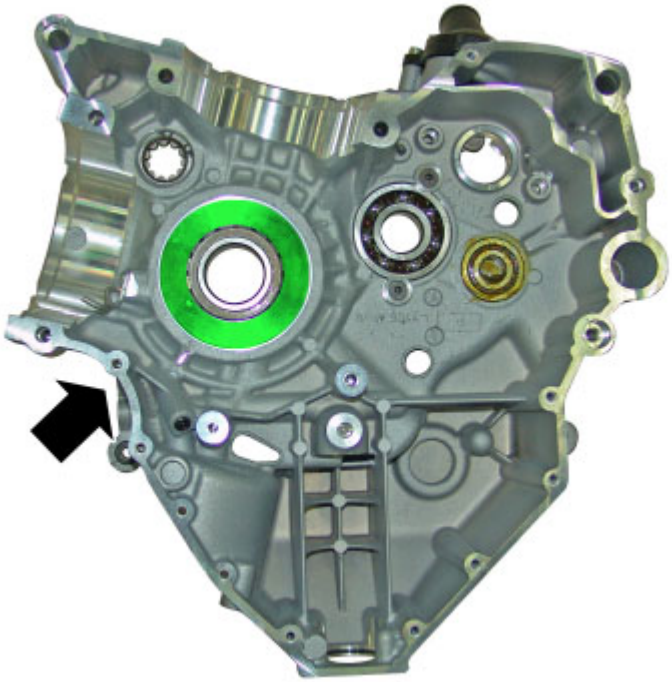

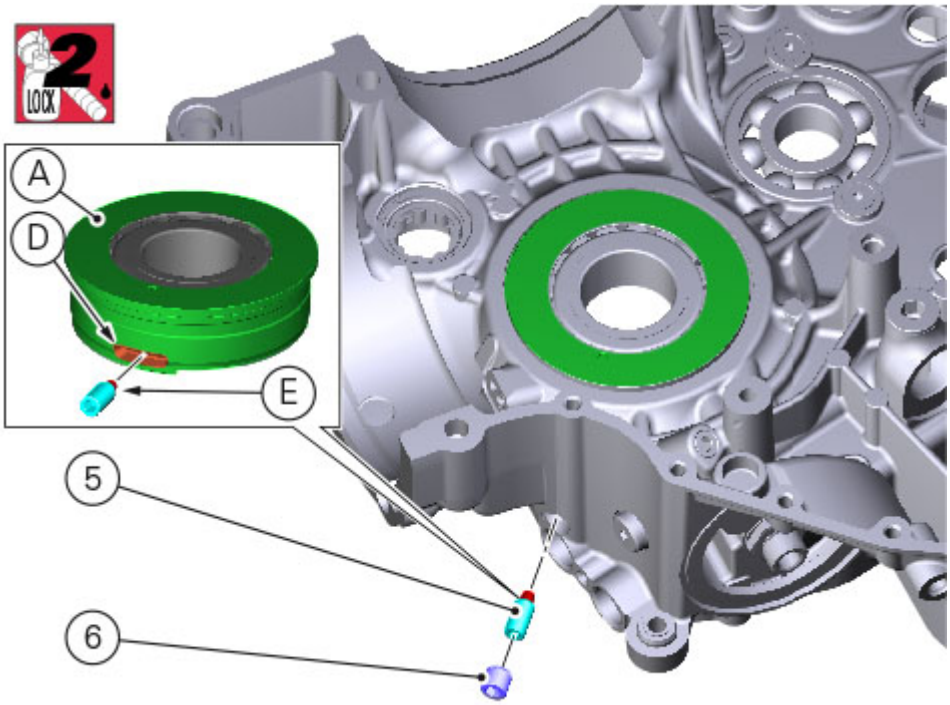

For bearing (23) pre-tightening, insert the roller bearing (24) so that the side with "marks" faces downwards and is fully home inside the bush (25); ensure that the groove (F) is fully visible.
Install the snap ring (26) into the groove (F), locking the roller bearing (24) into the bush (25).

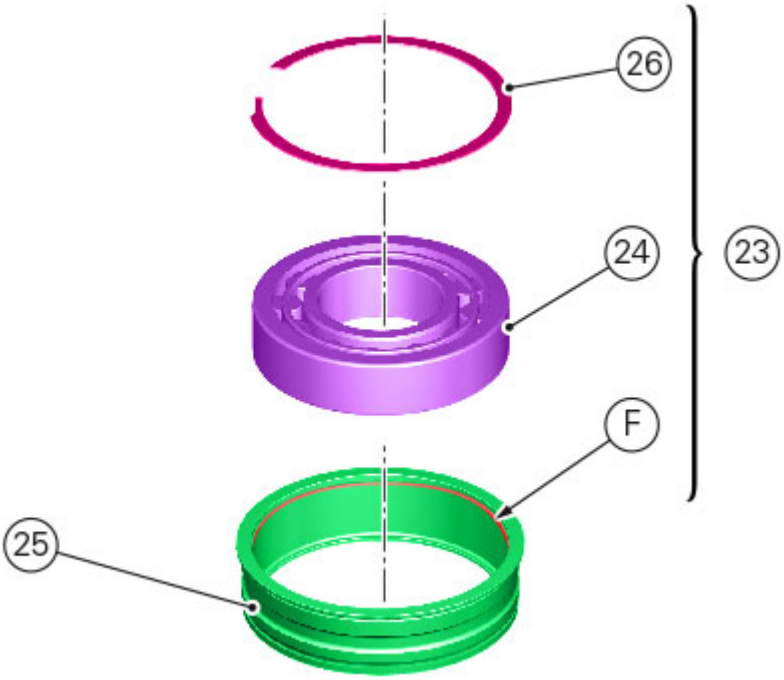

CHAIN-SIDE CRANKCASE HALF

Take special care to main bearing assembling.
During this operation, casing must be heated; pay utmost attention to the heating temperature according to the seal ring (31)

Warning
If the seal ring, already fitted in the crankcase half, is heated at a temperature equal to or higher than 120 °C, it looses its properties.

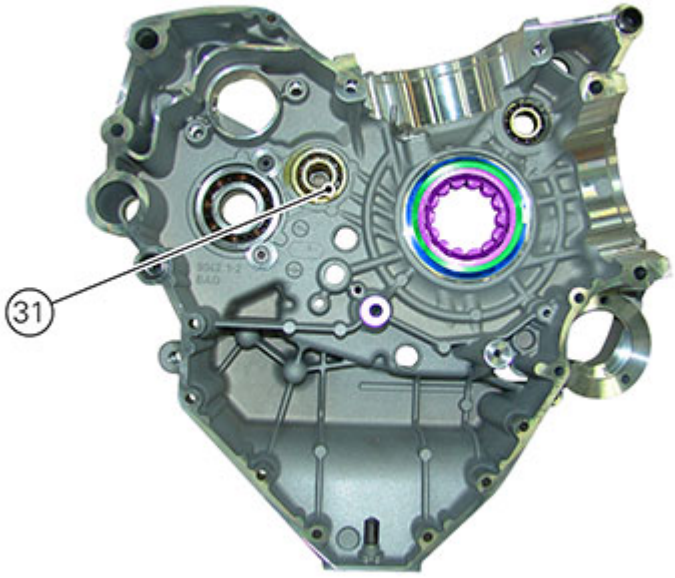

Working on outer side, insert bearing (29), inside bush (23), so that the side with "marks" faces outwards; then drive it home on the bush (23).
Working on inner side, insert snap ring (30) inside bush, until positioning it inside the relevant groove.
Heat the crankcase half at a temperature between MIN. 95°C and MAX. 110°C.
Once the desired temperature has been reached, drive from the outer side the pre-assembled bearing fully home inside crankcase half, checking that bush is correctly inserted inside the relevant seat (Y) on crankcase half using fastener (X).
Then insert snap ring (28) and close the main bearing pack, working on casing inner side.

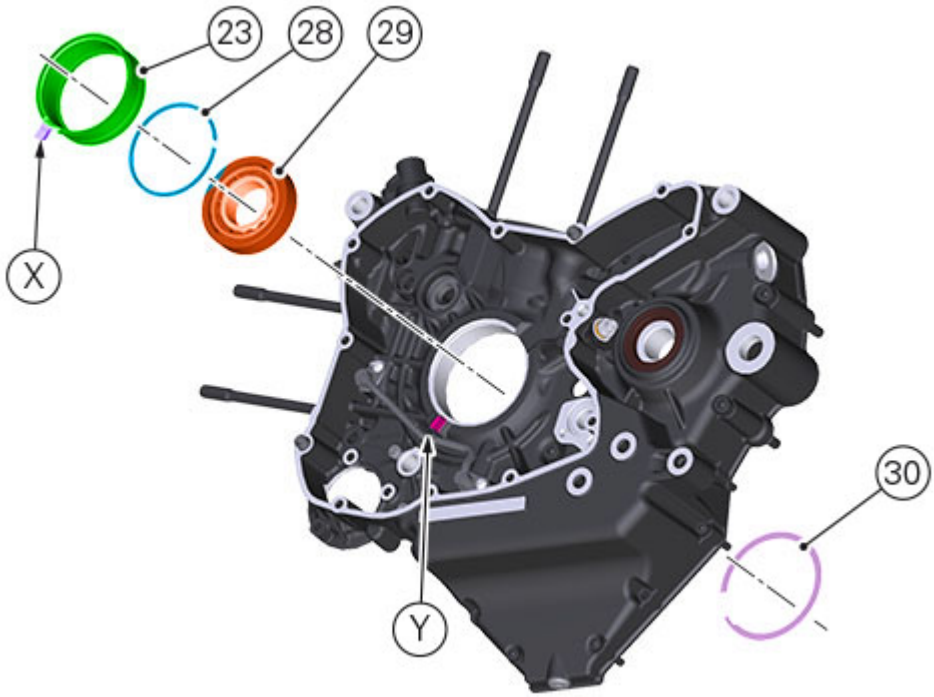

Note

Keep the press load on the bearings as long as necessary to reach a crankcase half temperature of 50 ± 5 °C.

Note

While keeping the load it is possible to speed up the crankcase half cooling with an air blow at ambient temperature of approximately 20 °C.

Warning

While cooling the crankcase half, the above-mentioned components may move from their fully home position. It is therefore important to keep the components fully home for a time necessary to ensure a sufficient cooling of the crankcase half and thus a definitive fixing of the bearings fully home.

From crankcase half internal side, fit the snap ring (27) into the groove (E), locking the bearing (23) in the crankcase half (9).

Attention

On worn engines, the bearing holder bushes may no longer be tight fitted in the crankcase halves.

After having removed the bushes, ensure that the interference fit between casing and bush, with bearing installed, is (0.105÷0.029) mm on flywheel side, and (0.126÷0.037) mm on clutch side.

Overhauling the crankcase halves

Visually inspect the engine crankcase halves:
(15) chain side crankcase half;
(16) clutch side crankcase half.
Check that the surfaces of the crankcase halves are perfectly flat using a reference surface.
Check that the bearings (20) and (22), and the bushes (23) and (24) are in good conditions.
Note that the main bearings must always be changed in pairs (refer to the procedure in paragraph "Main bearings").

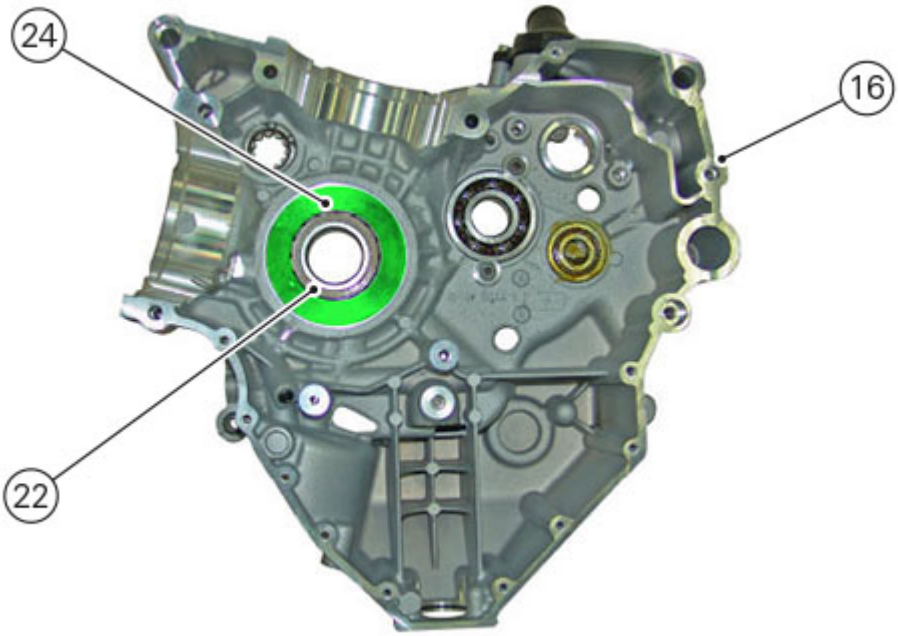

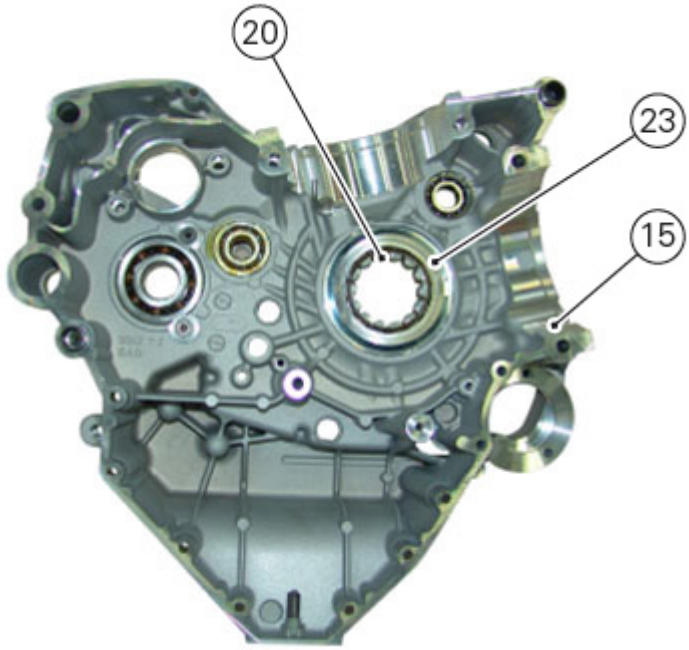

Note
When overhauling an engine it is good practice to replace all the crankcase bearings.

Bearings (25) and (26) support gearbox shafts and are secured with screws (27) and spacers (28).

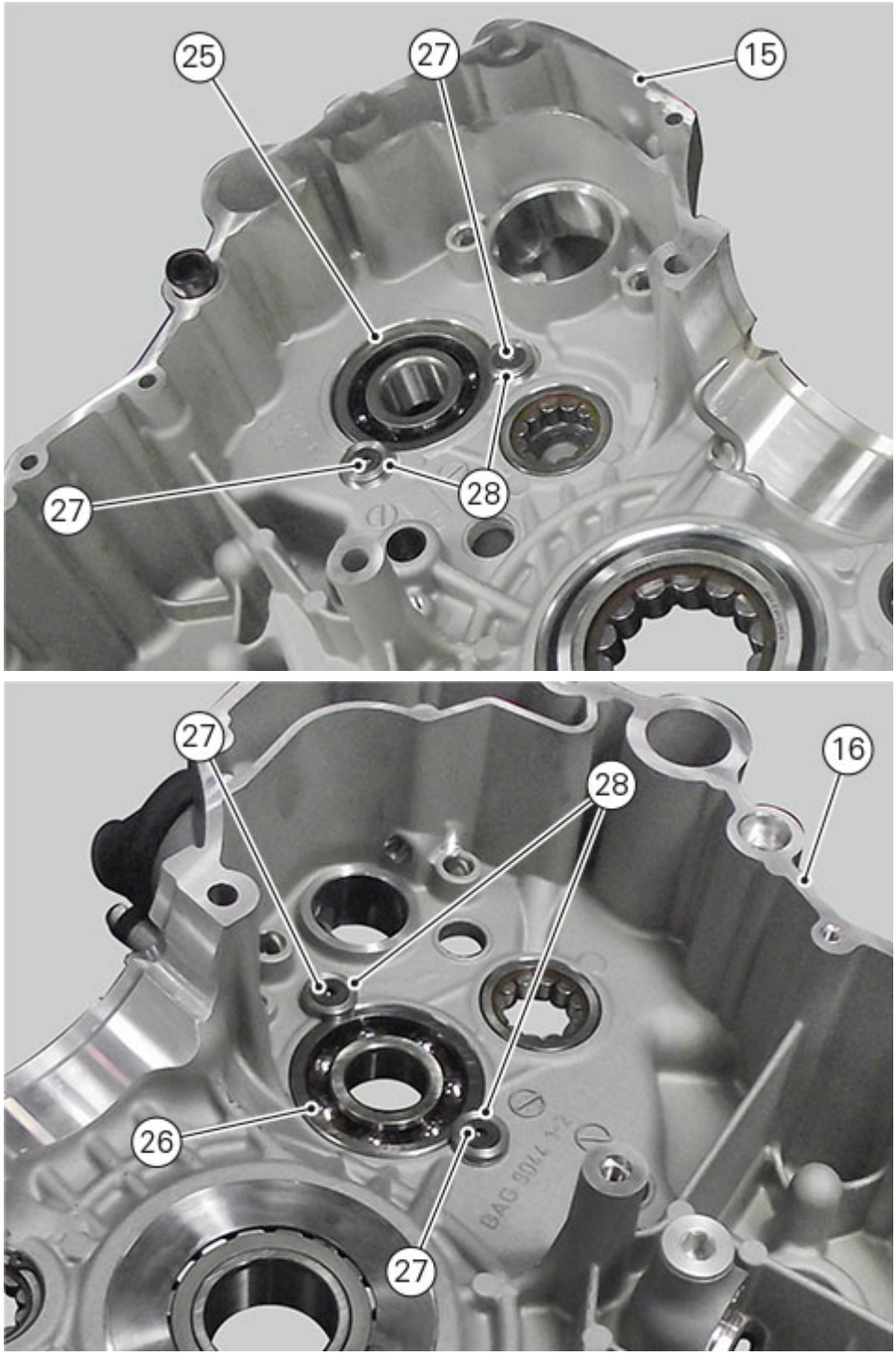

At each overhaul it is recommended to replace also the sealing ring (19) on the outside of bearing (25).

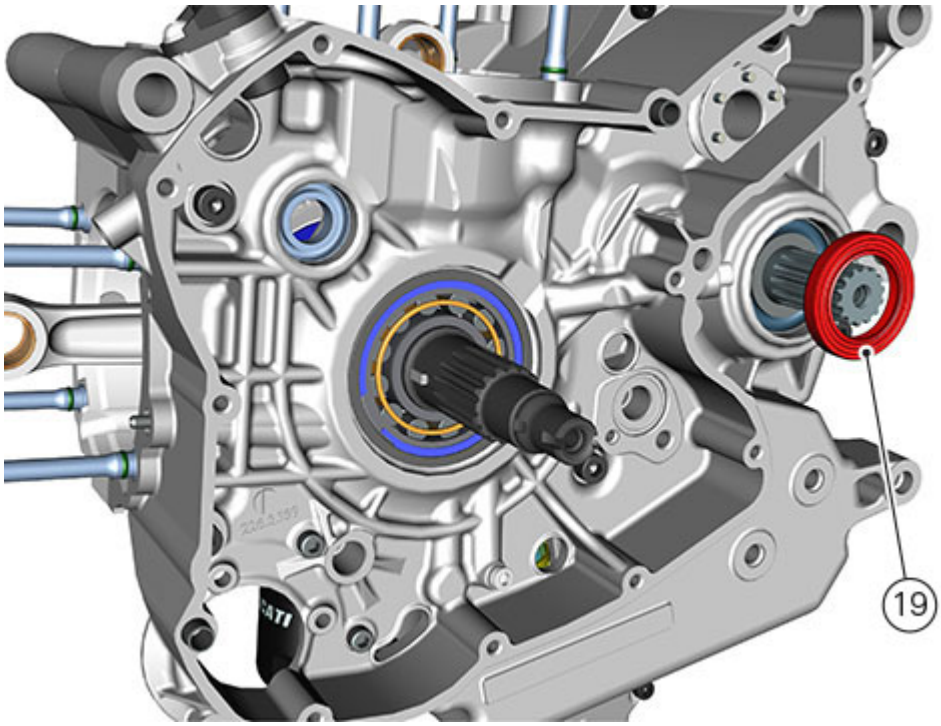

Lubricate oil seal (31) with the specified product and fit it completely inside its seat on the crankcase.

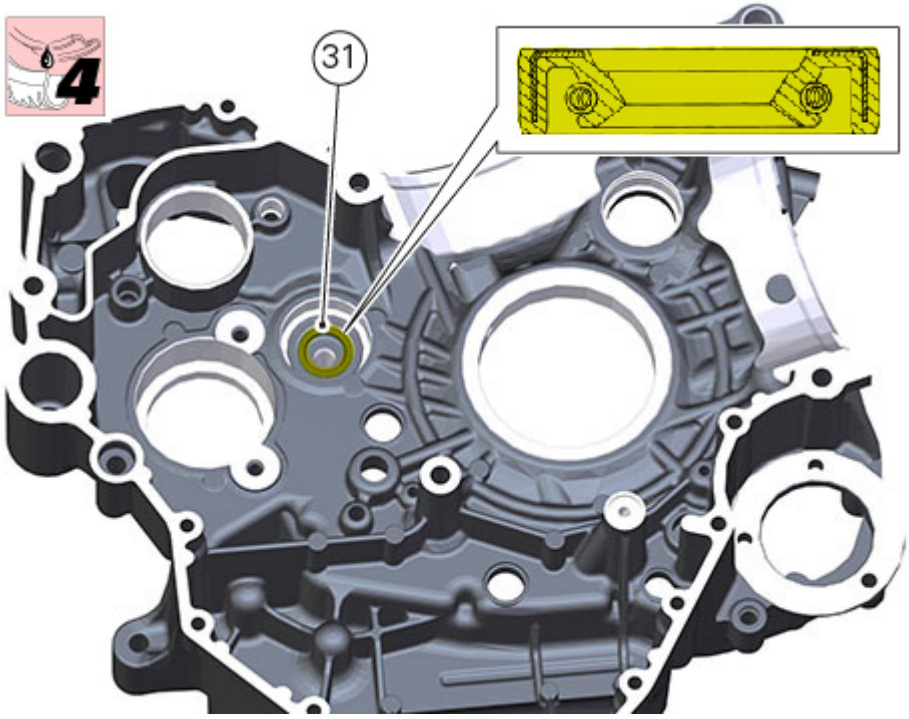

Check the correct position of oil seal (31).

Important

Make sure the oil seal thickness corresponds to the specified value, otherwise replace the clutch side crankcase half.

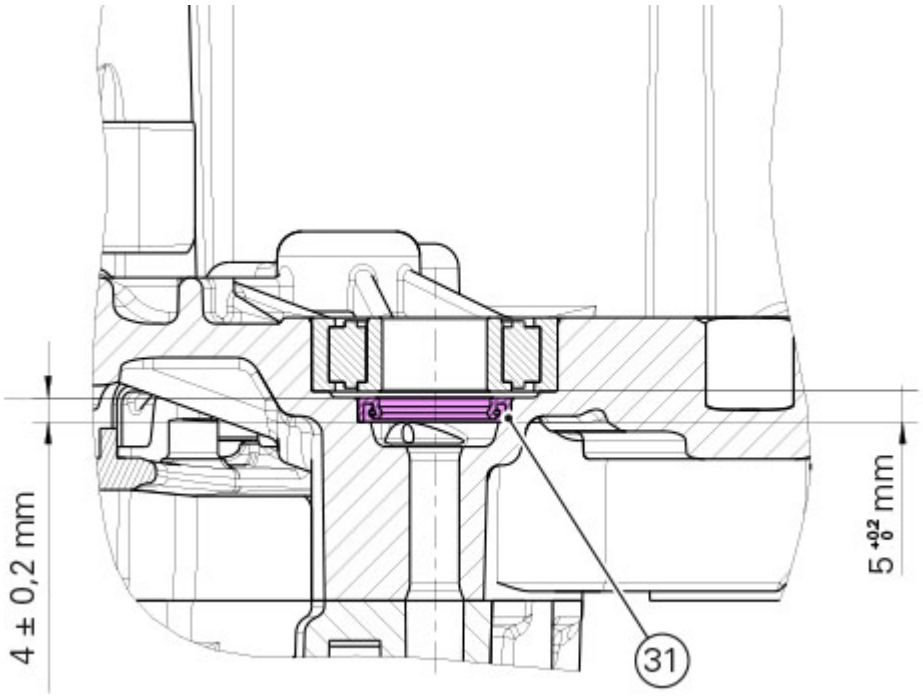

Replace the bearings (29) and (30) on the ends of the gearbox shafts and timing layshaft bearings (32) and (33). Respect the bearings (29) and (32) correct position.

Important

Make sure the writing on the bearings is visible.

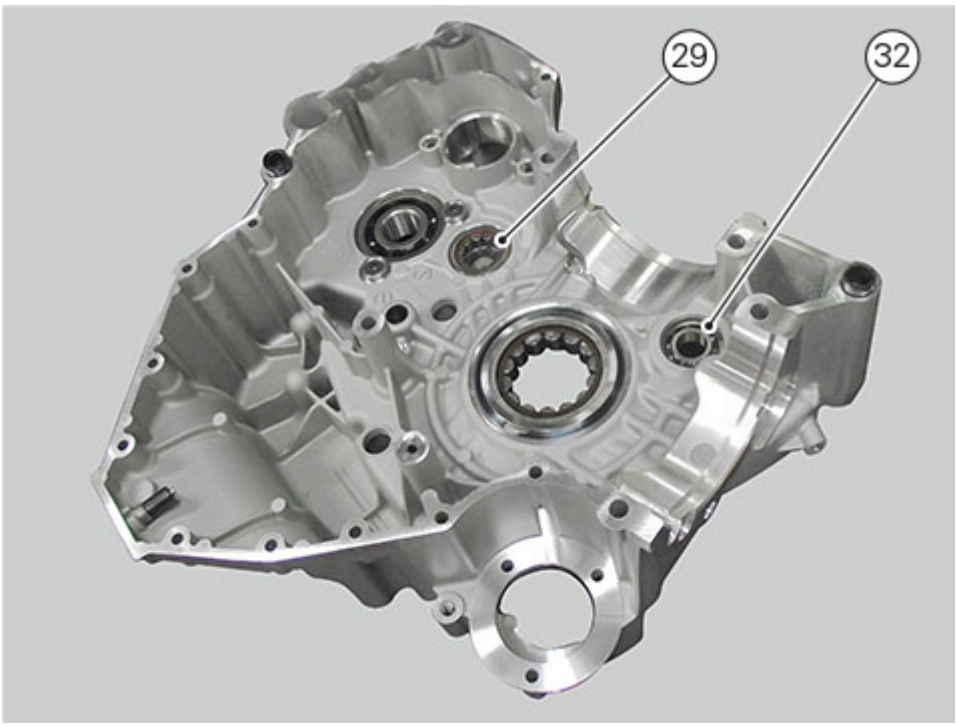

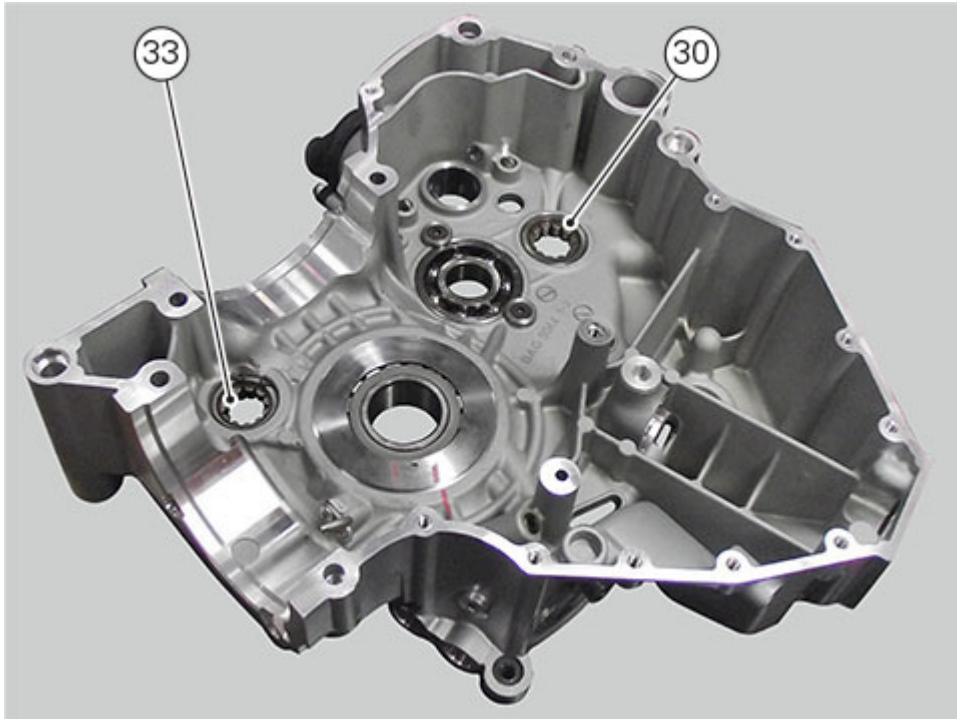

Take care not to lose the shim (34) between the bearing (29) on the end of the gearbox primary shaft and the chain side crankcase half (15).

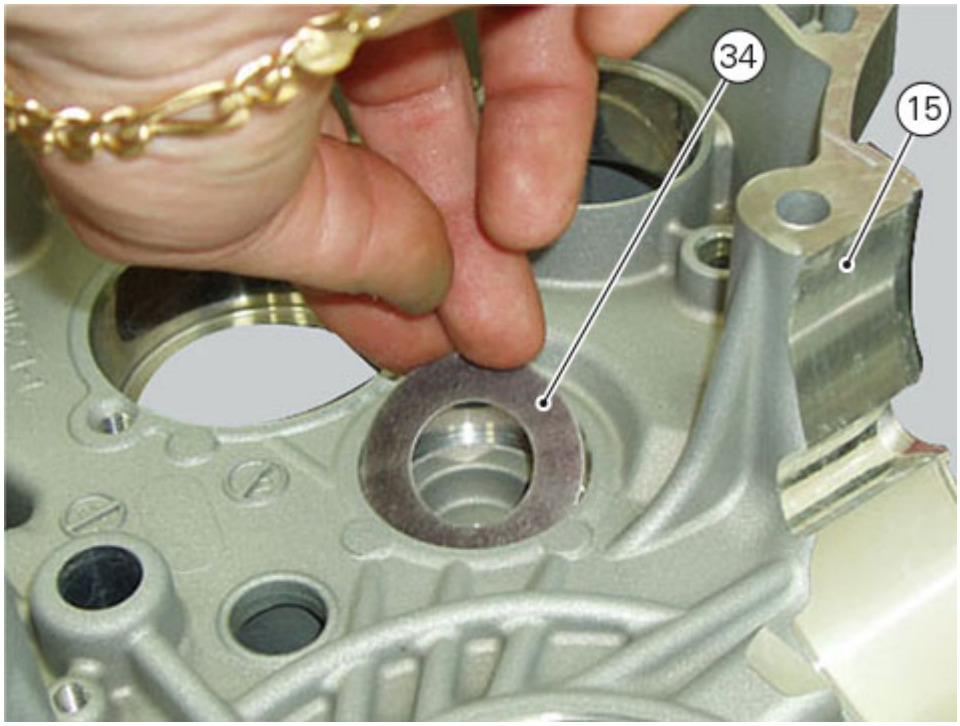

The following components are fitted on the roller bearing (33):

- one seal ring (35), on the outer side: replace it upon each overhaul after having cleaned it with denatured alcohol and lubricated it with specified product;
- a snap ring (36), on the internal side.

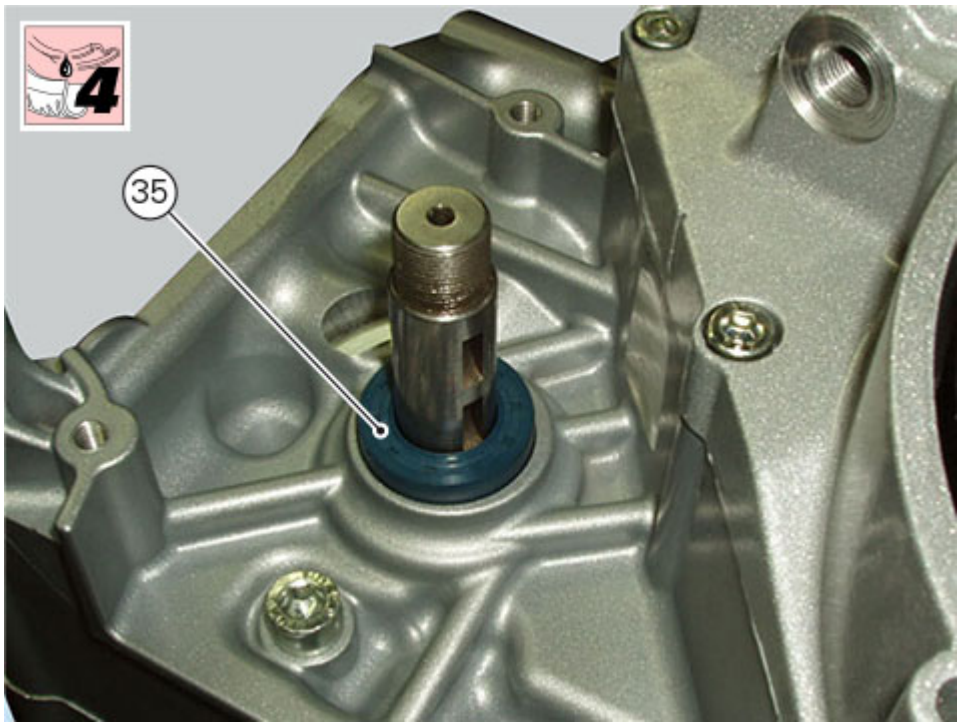

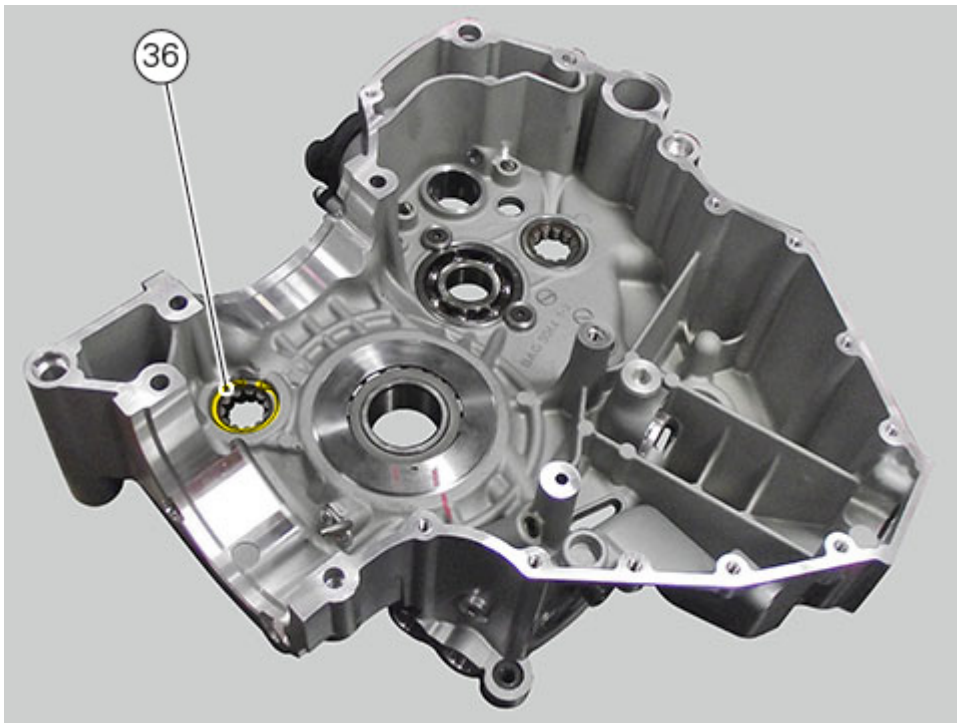

Check that the oilways are free of restrictions or clogging.
Check the condition of centring bushes (13). If apparently distorted or loose in their seats, change them using proper tools.
When the centring bushes (13) are hard to remove from casing, use a left-hand tap to force bushes out.

Important
The bushes must always be replaced when they have been removed using the above procedure.

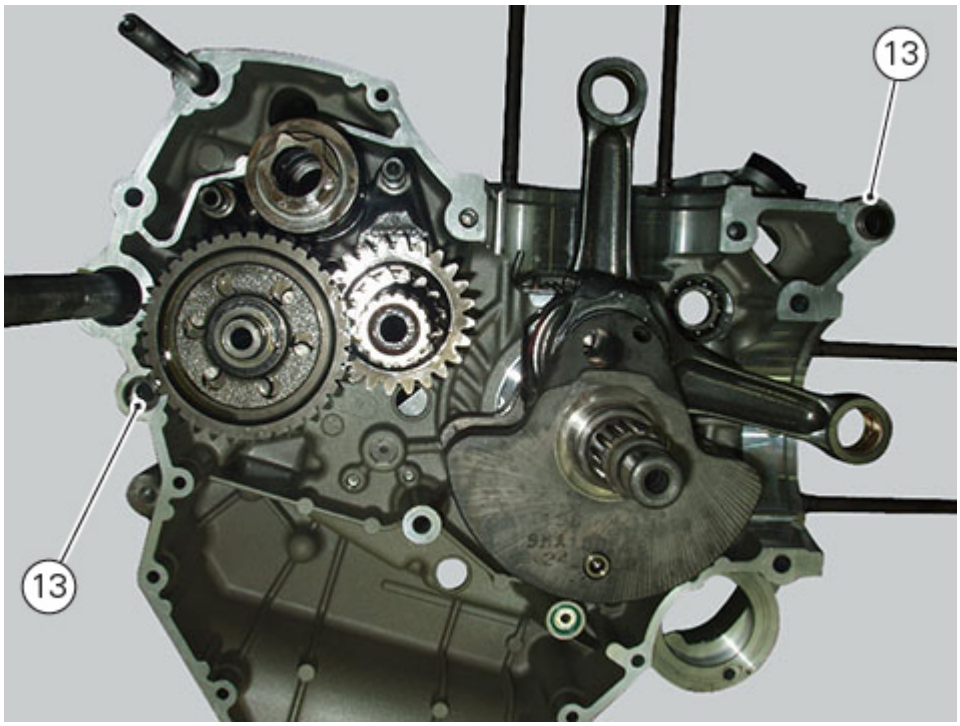

On bearing (32), on the inner side, there is one snap ring (38).

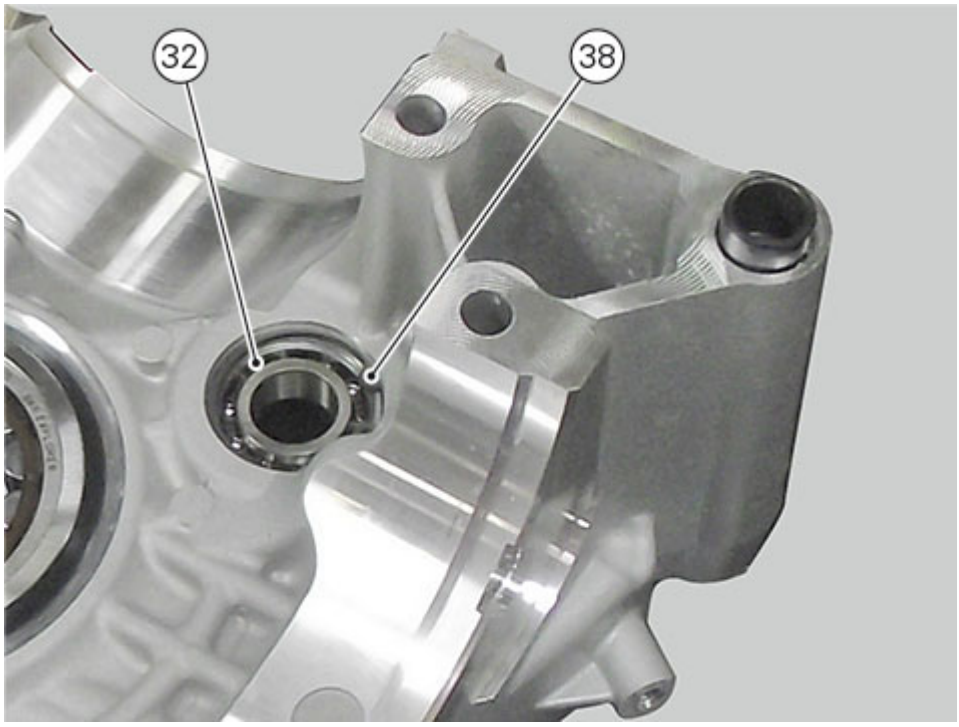

On chain side outer crankcase half, if necessary, remove oil pipe (40) by loosening the two screws (39) and collecting the two O-rings (41) on crankcase, if any.
Blow it with compressed air and re-assemble it by following the disassembly procedure in reverse order and tightening the two screws (39).

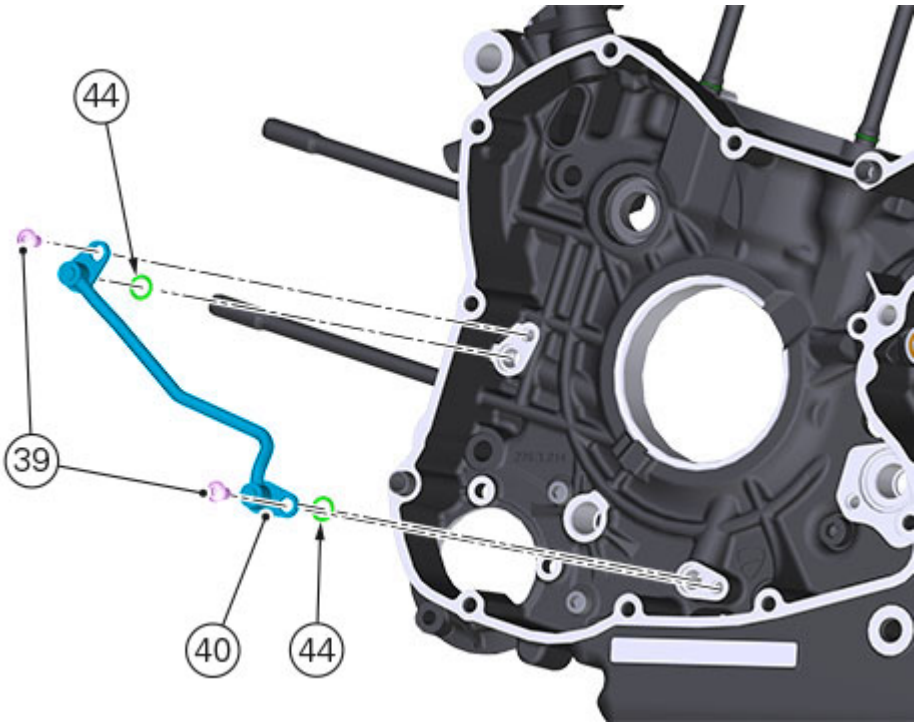
44
39
40
44

Separating the crankcase halves

Remove the engine from the frame (Removing the engine).
Remove the timing components (Removing the timing outer covers).
Remove the generator side cover and the generator assembly (Removing the generator cover).
Remove the complete cylinder head assembly (Removing the cylinder heads).
Remove the mobile tensioner and timing belts (Removing the mobile tensioner/timing belt).
Remove the camshaft assembly (Removing the camshafts).
Remove the complete cylinder head assembly (Removing the cylinder heads).
Remove the complete cylinder/piston assy (Removing the cylinder/piston assy).
Remove the starter motor (Removing the starter motor).
Remove the clutch cover (Removing the clutch cover).
Remove the clutch unit (Removing the clutch).
Remove the oil pump (Removing the oil pump).
Remove the primary drive gear (Removing the primary drive gear).
Remove the mesh filter (Changing the engine oil and filter cartridge).
Remove the complete gearbox unit (Removing the gearbox unit).

Undo the two screws (1) retaining the crankcase halves on the clutch side.

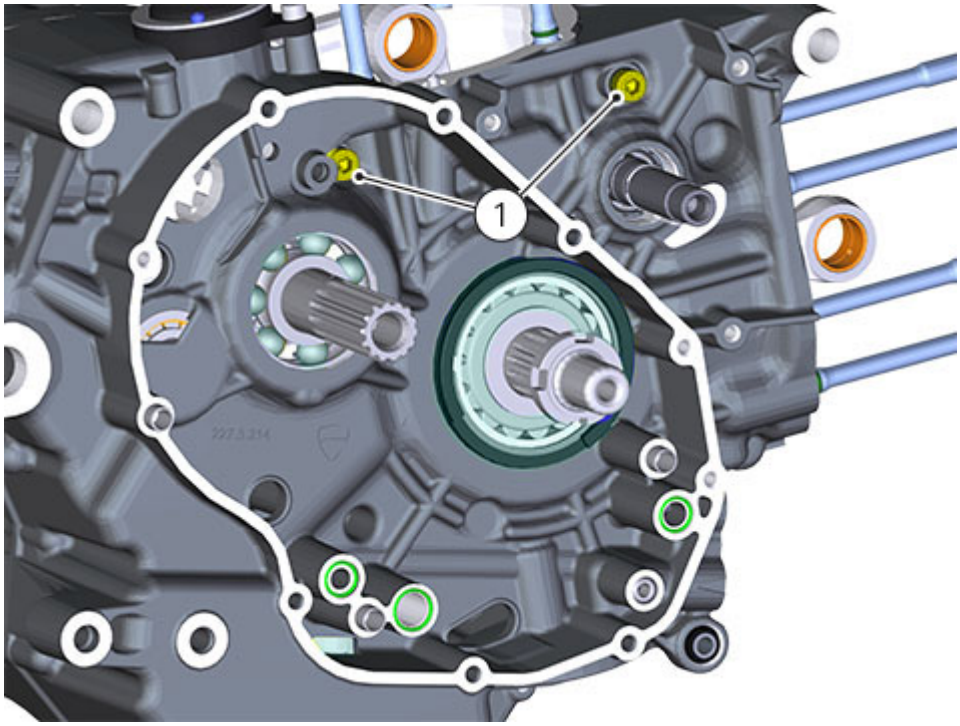

Working on the chain side, loosen the casing two internal retaining screws (2) (horizontal cylinder).

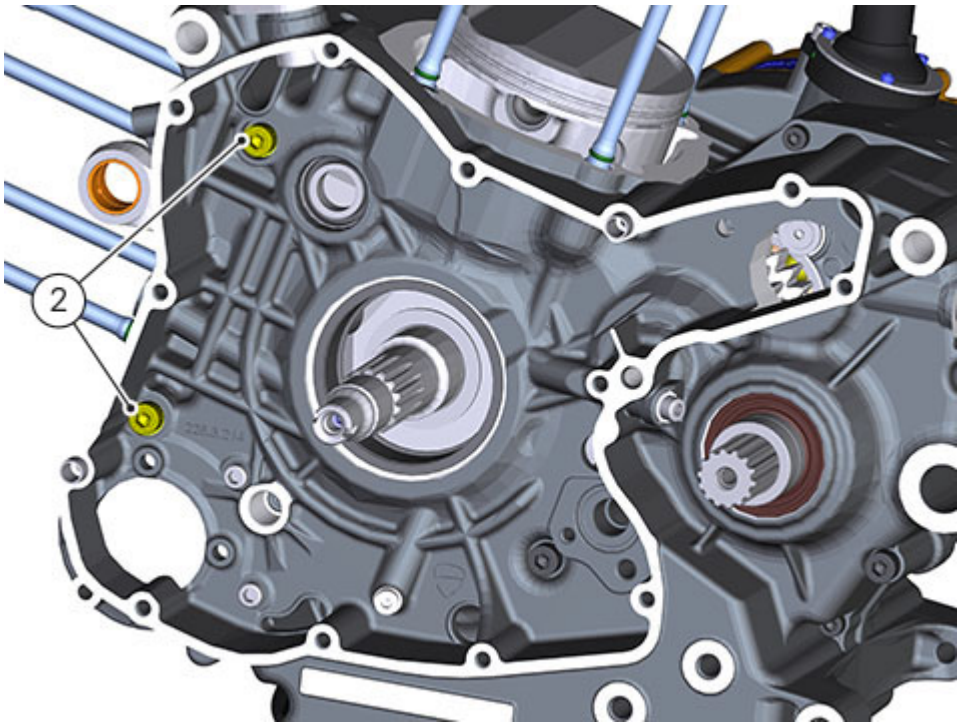

Loosen the two retaining screws (3) (starter motor).

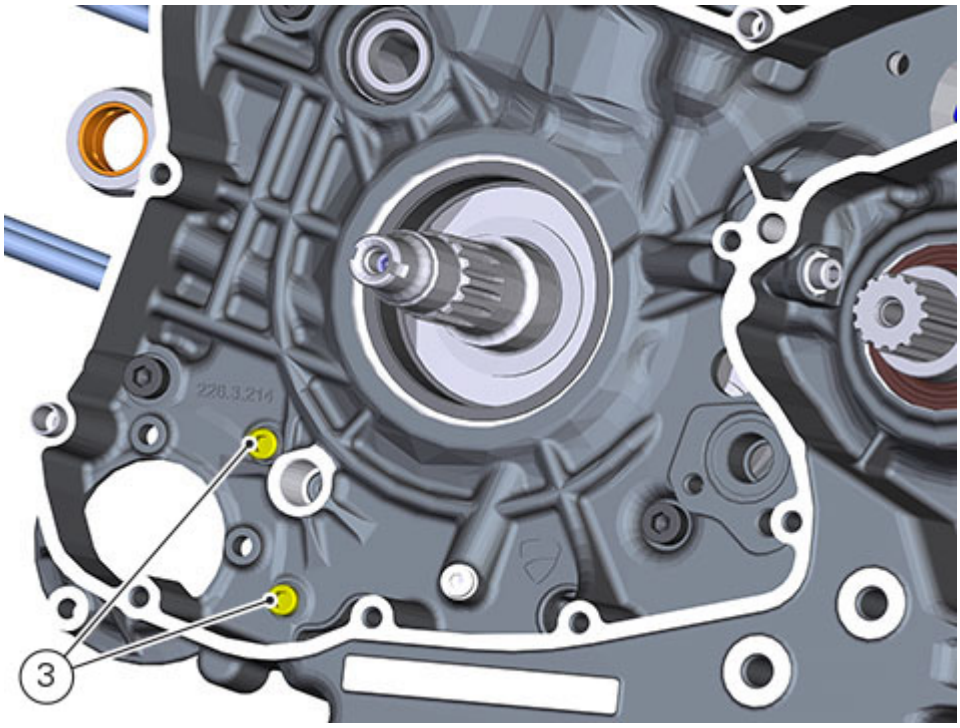

Loosen the three screws (4) retaining the casing.

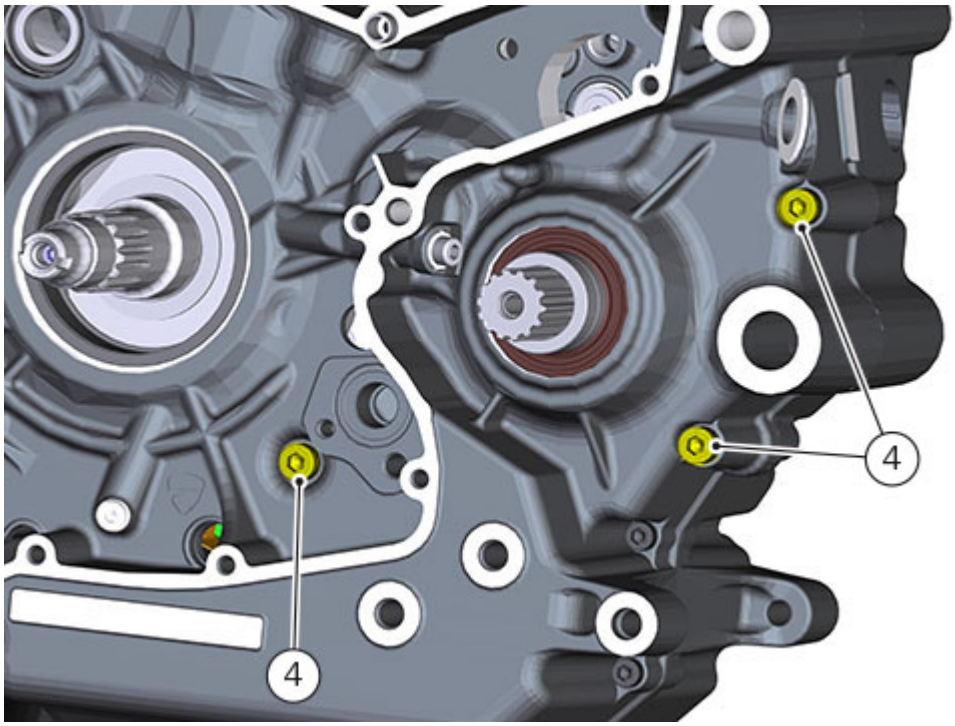

Loosen the three screws (5) securing the lower casing.

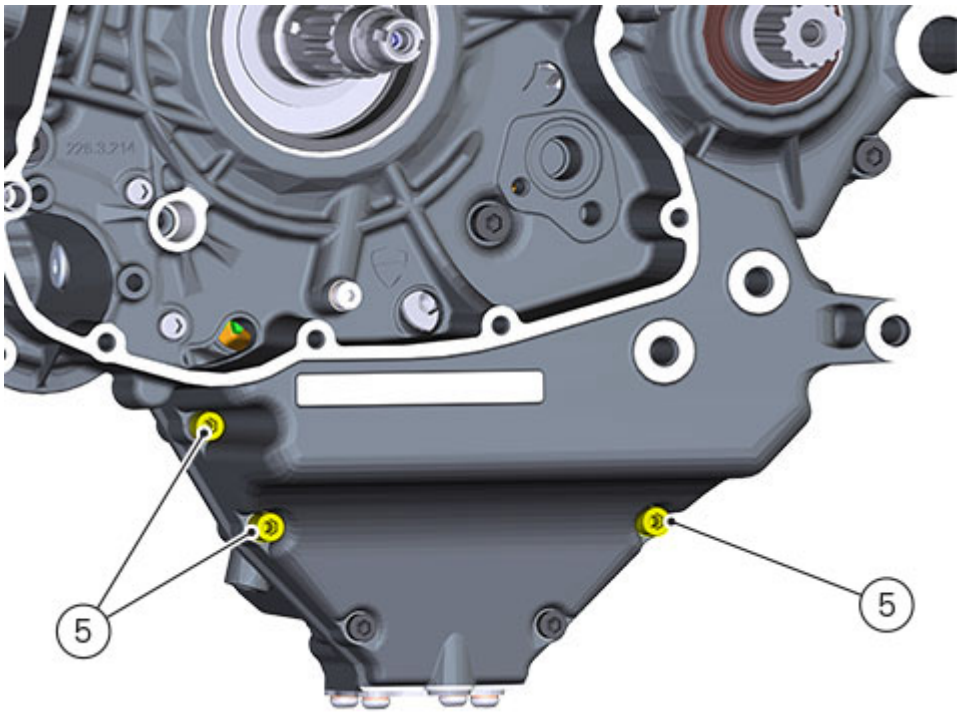

Loosen the five screws (6) retaining the casing.

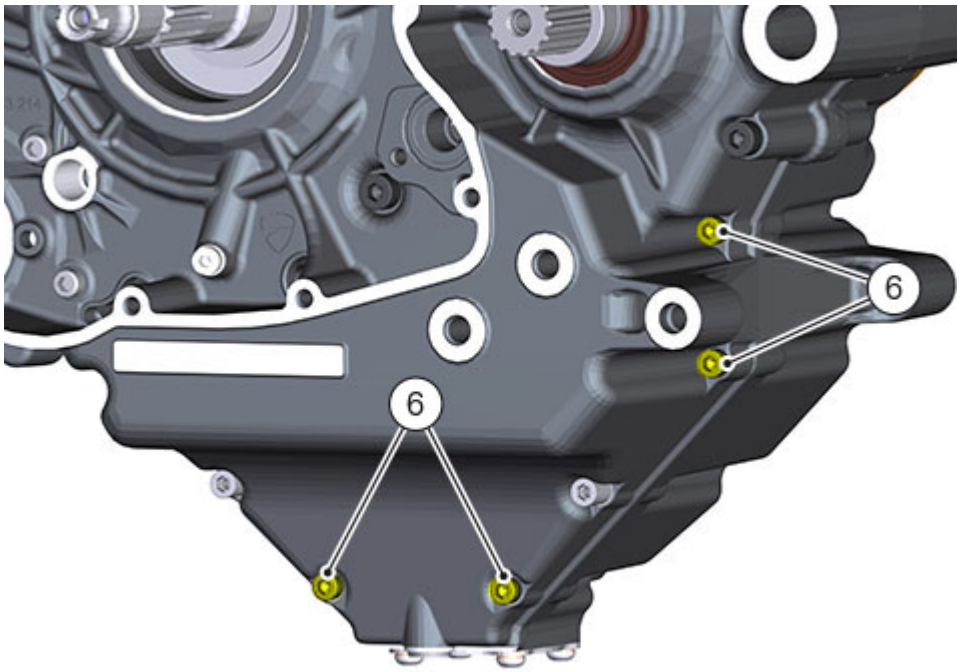

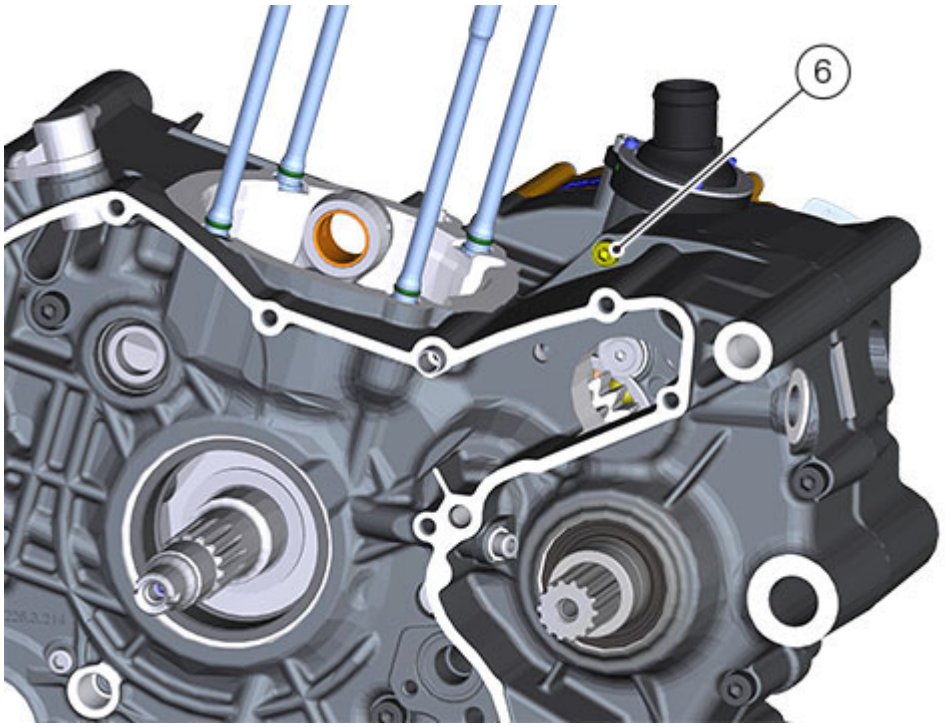

Reuse the generator cover or a service cover with puller (B) part no. **88713.1749** fitted. Secure cover to crankcase half with some of the original screws and begin separation by turning the central pin of the tool. Tap the end of the gearbox secondary shaft with a plastic mallet to separate the crankcase halves.

Note

Take care not to lose the shim washers on the shafts and on the selector drum.

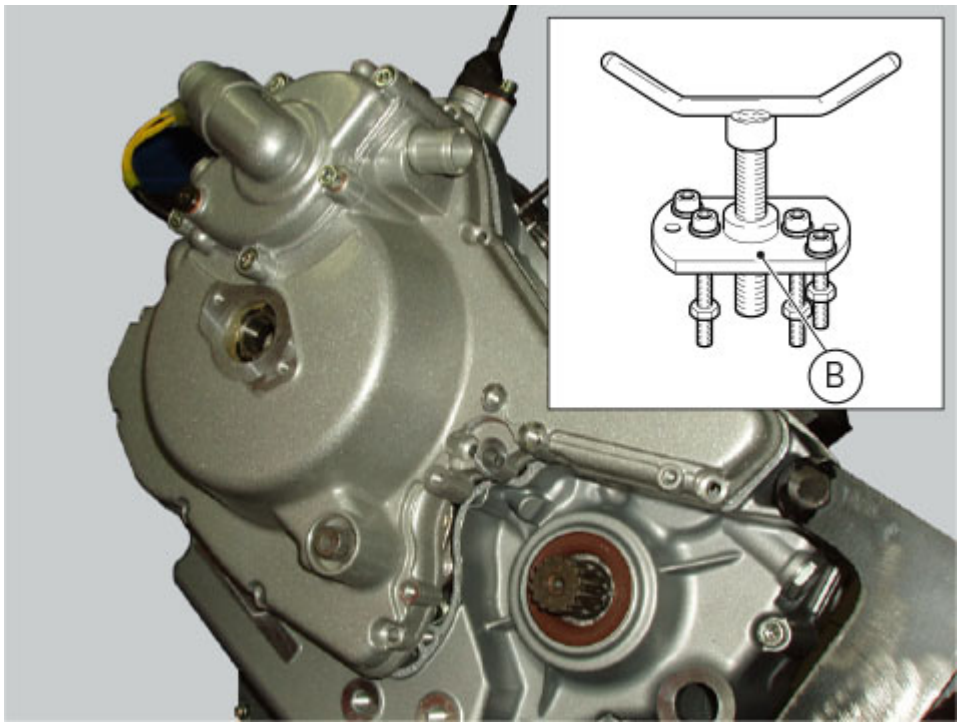

Drive out the crankshaft (A) using a plastic mallet, taking care not to lose the snap ring.

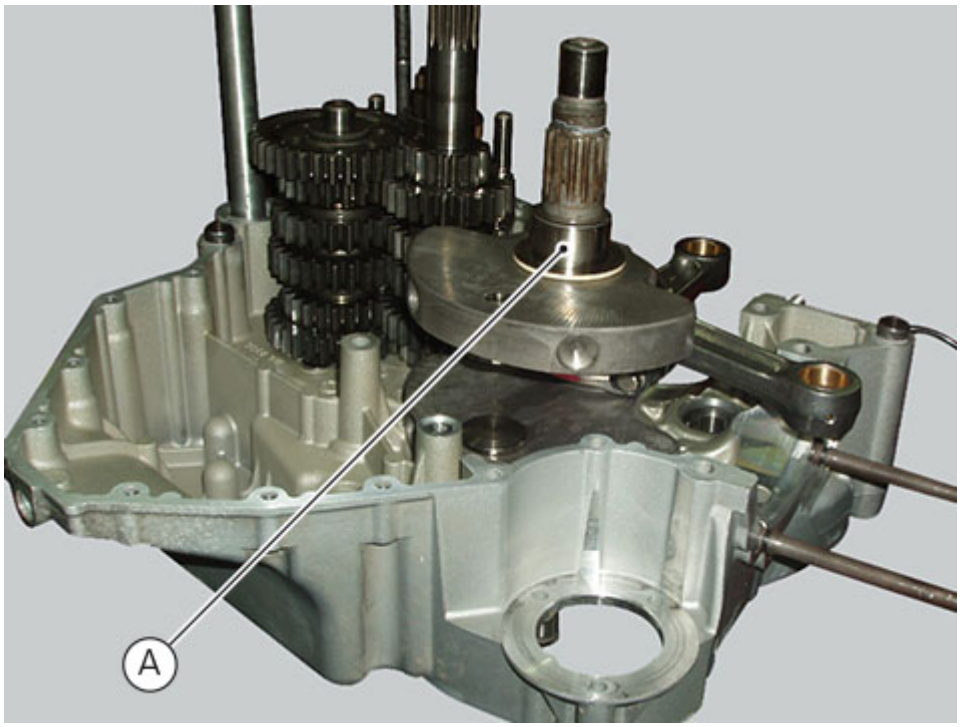

Remove the timing layshaft (7).

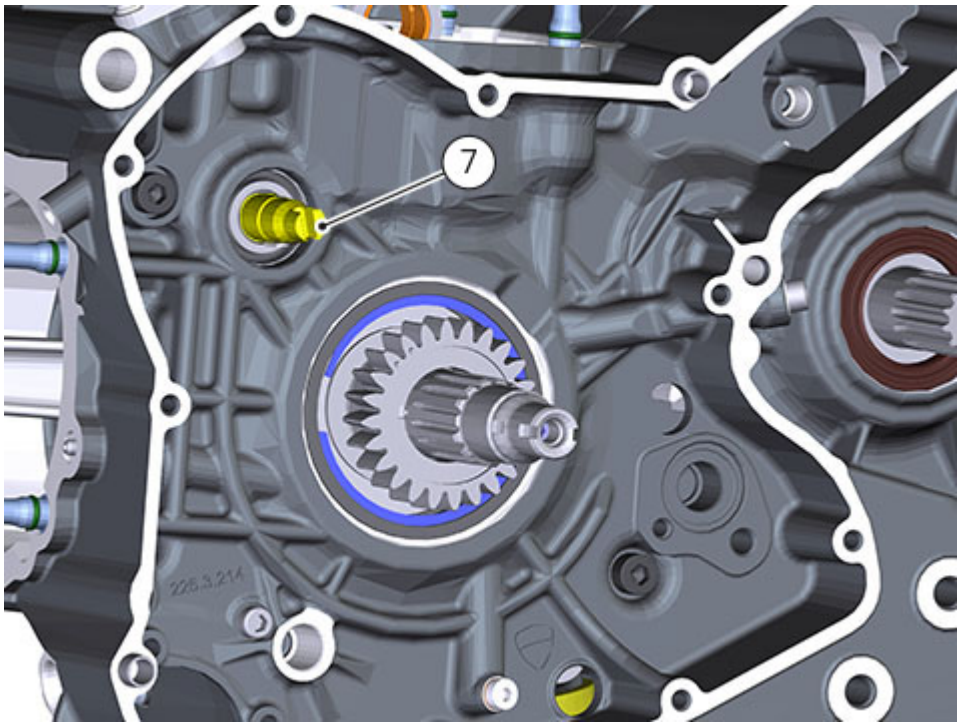

Working on both crankcase halves, loosen screw (8), remove tube (9) and collect the O-ring.

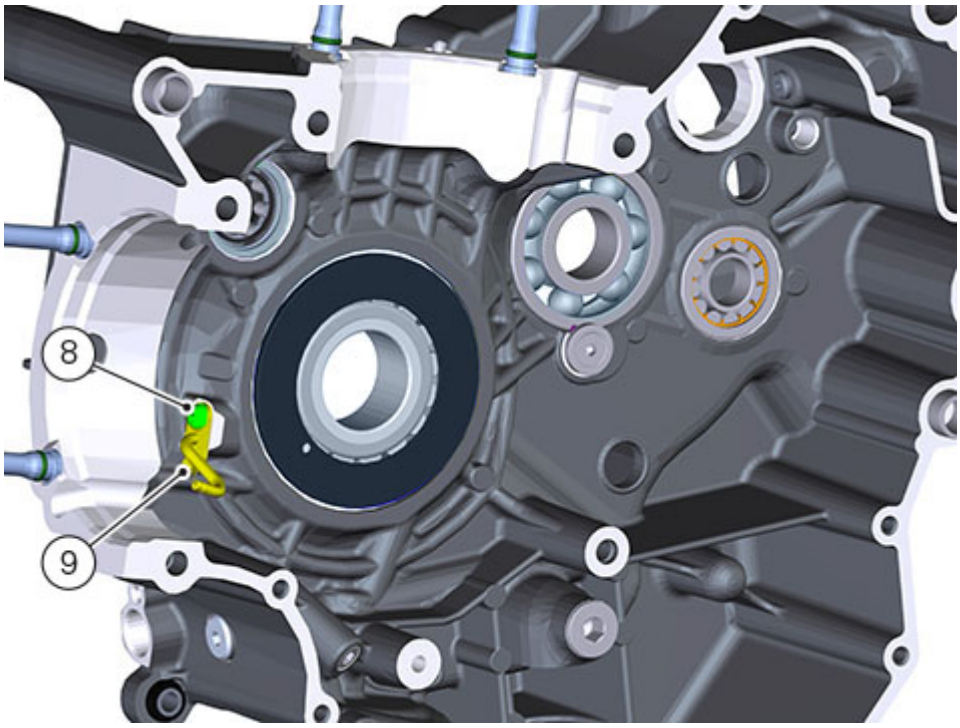

Refitting the connecting rod assembly

Install the connecting rod assembly (1) and (2) in the crankcase half, carry out the shimming and crankcase half reassembly procedure as described in section "Closing the crankcase".

Important

Make sure that the connecting rods are correctly positioned in the relevant cylinder seats. Incorrect positioning of the connecting rods at this stage will inevitably lead to the need to re-open the crankcase halves.

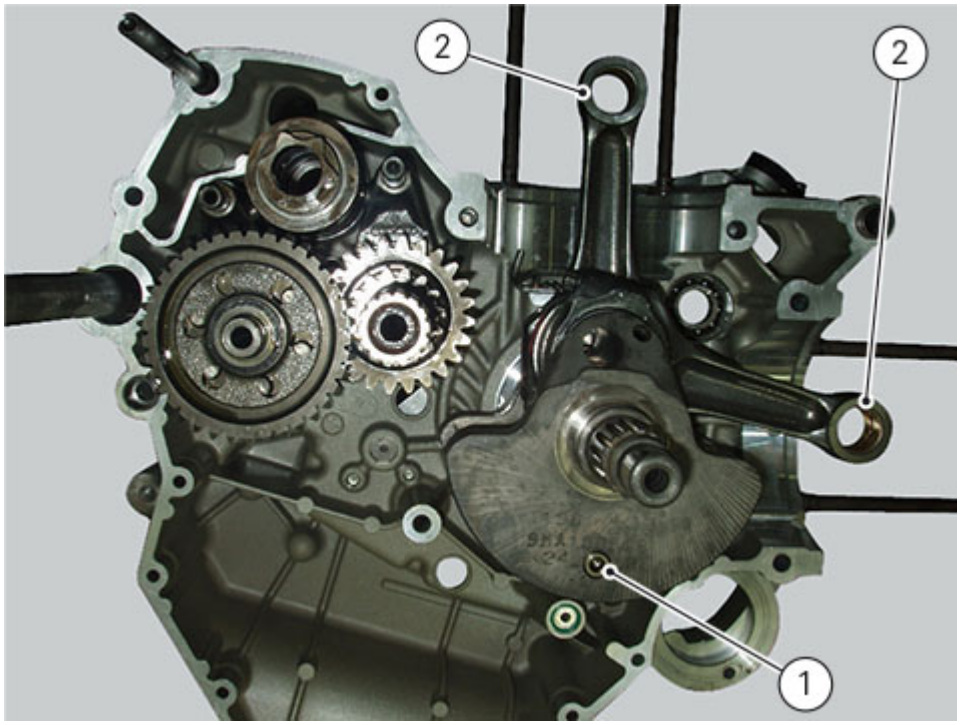

Refit the mesh filter (Changing the engine oil and filter cartridge).
Refit the primary drive gear (Refitting the primary drive gear and checking backlash).
Refit the oil pump (Refitting the oil pump).
Refit the clutch unit (Refitting the clutch).
Refit the clutch cover (Refitting the clutch cover).
Refit the starter motor (Refitting the starter motor).
Refit the generator assembly and the generator side cover (Refitting the flywheel/generator assembly).
Refit the complete cylinder/piston assembly (Refitting the cylinder/piston assembly).
Refit the complete cylinder head assembly (Reassembling the cylinder head).
Refit the camshaft assembly (Refitting the camshafts).
Refit the timing system components (Refitting the cylinder head pulleys/fixed tensioners).
Fit the engine on the frame (Refitting the engine).

Reassembling the connecting rod assembly

Before starting, check that the crankshaft main bearing and big-end journals are free of burrs or evident signs of machining: if necessary, clean the surfaces with very fine emery cloth and oil.
Check that the grooves are in perfect condition with no signs of forcing.
Thoroughly clean and lubricate the crank pin (A) on the crankshaft (4).

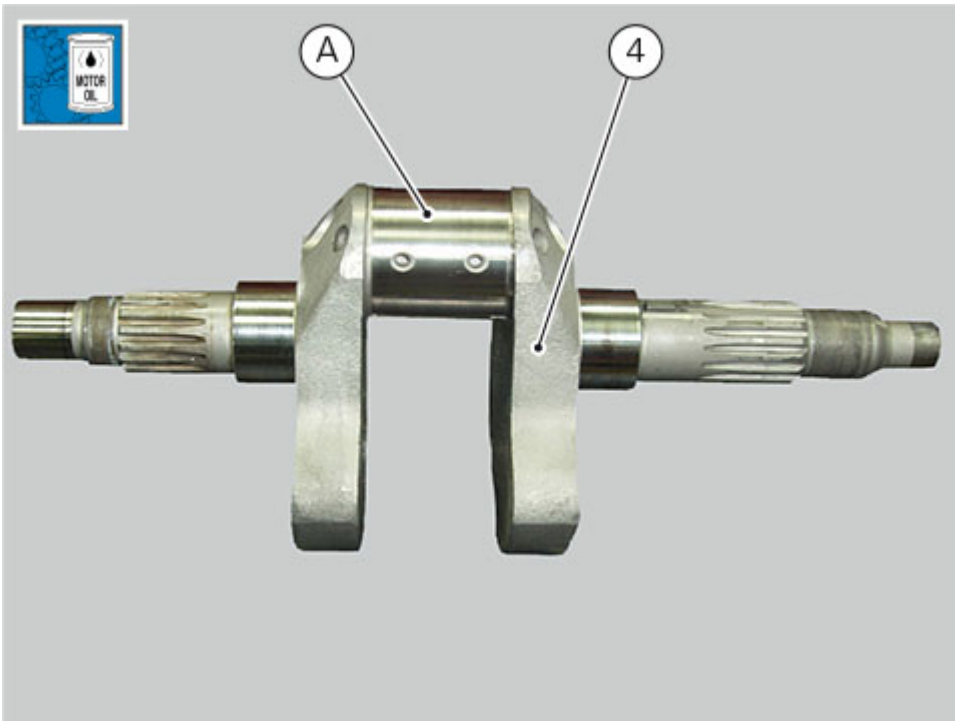

Take the bearings (3) necessary to shaft/connecting rod coupling, following the indications (Cylinder/piston).
Insert the bearing shells in the connecting rod seats matching the tooth (B) of the bearings with the corresponding marks (C) on the connecting rod cap (D) and on the connecting rod small end (E).
It is essential that the tooth (B) adheres perfectly to its own mark (F).

Warning

In the case of BLUE and YELLOW bearing coupling, fit the YELLOW on the connecting rod and the BLUE on the connecting rod cap.

Lubricate the bearing shell (3) fitted on the connecting rod small end.

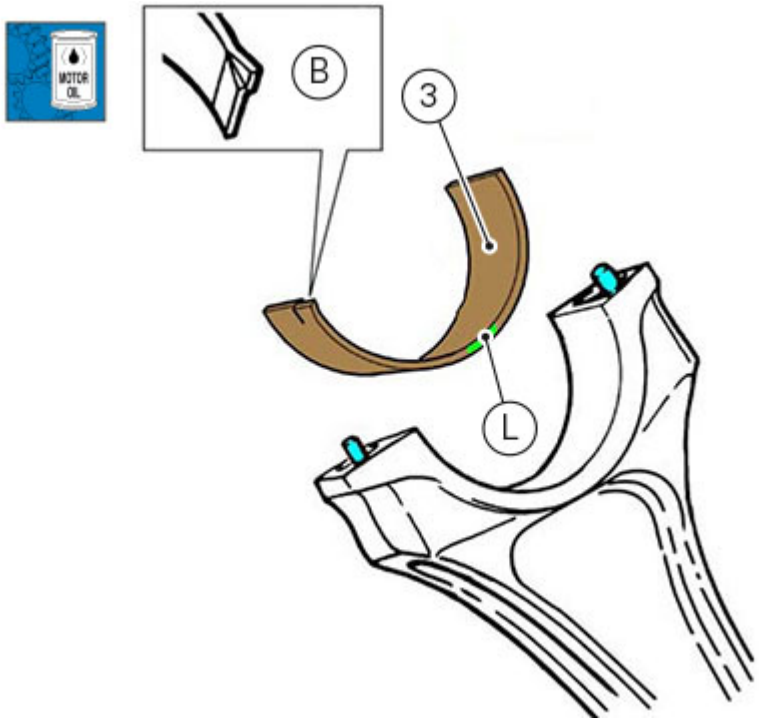

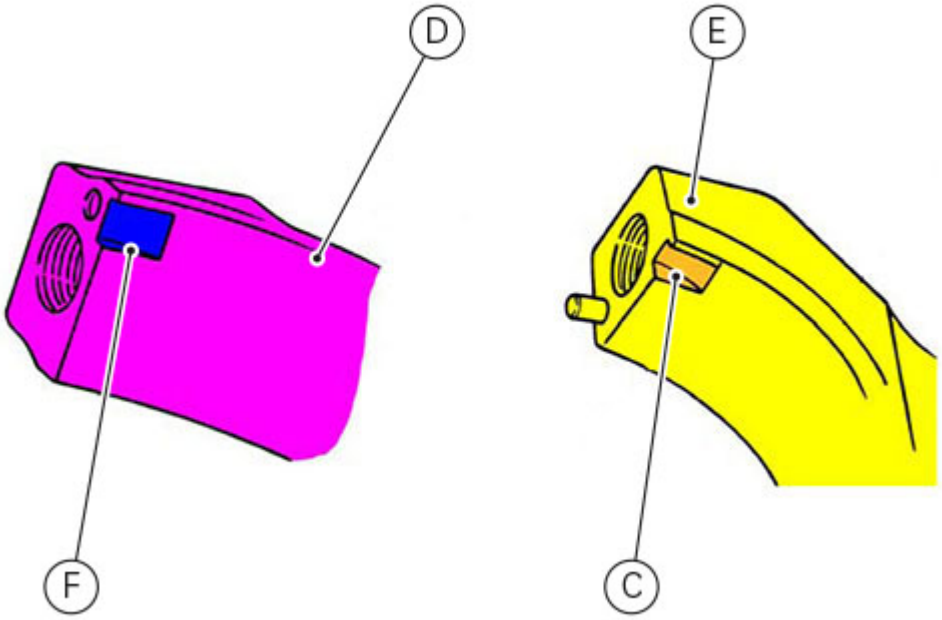

Check that each connecting rod (2) is fitted with its centring pins (G) between cap and the relevant shank.
Wash the pins and dry them with compressed air.
Fit the connecting rods on the crankshaft, in the same position in which they were removed.
Insert the connecting rods in the crankshaft, so that the centring pins face the internal side.

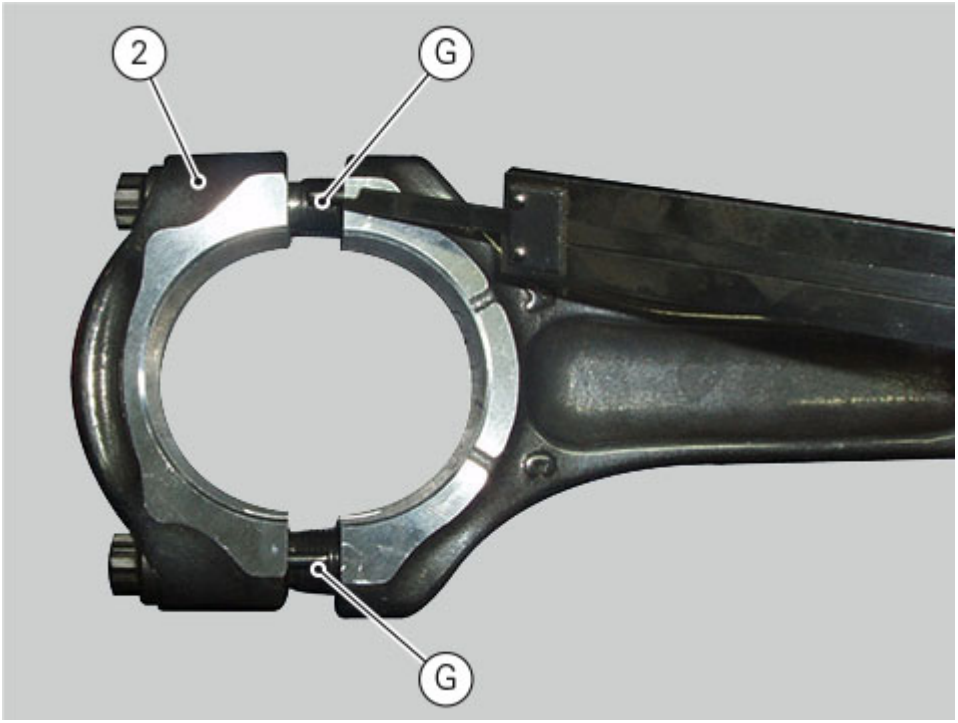

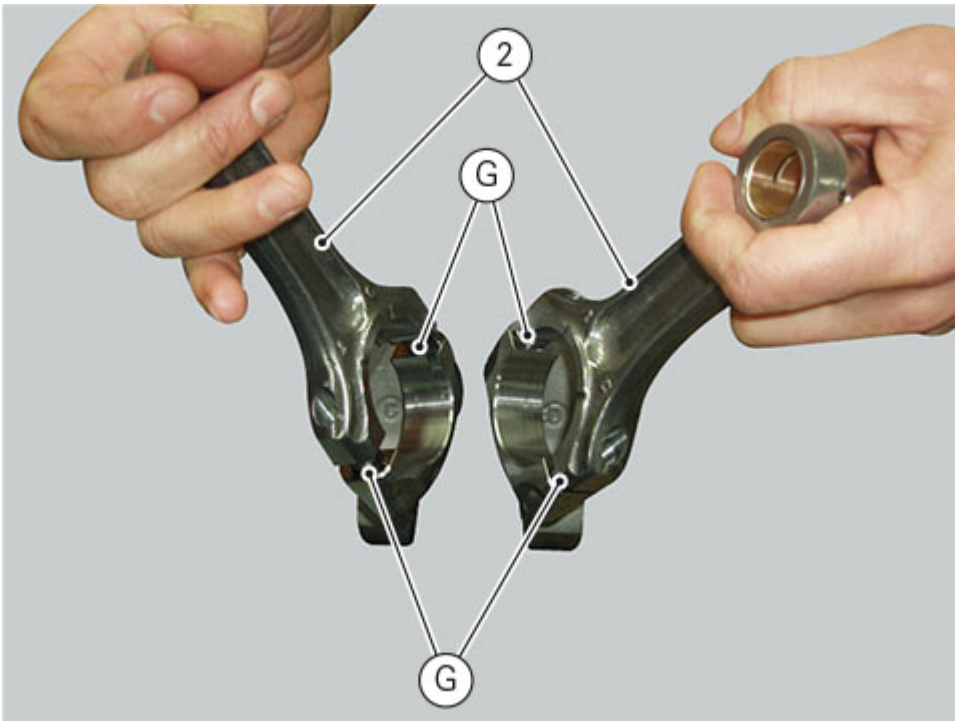

Join the connecting rod cap (H) with the corresponding connecting rod small end (I), ensuring that the progressive number stamped on the two pieces is the same, as shown in the figure.

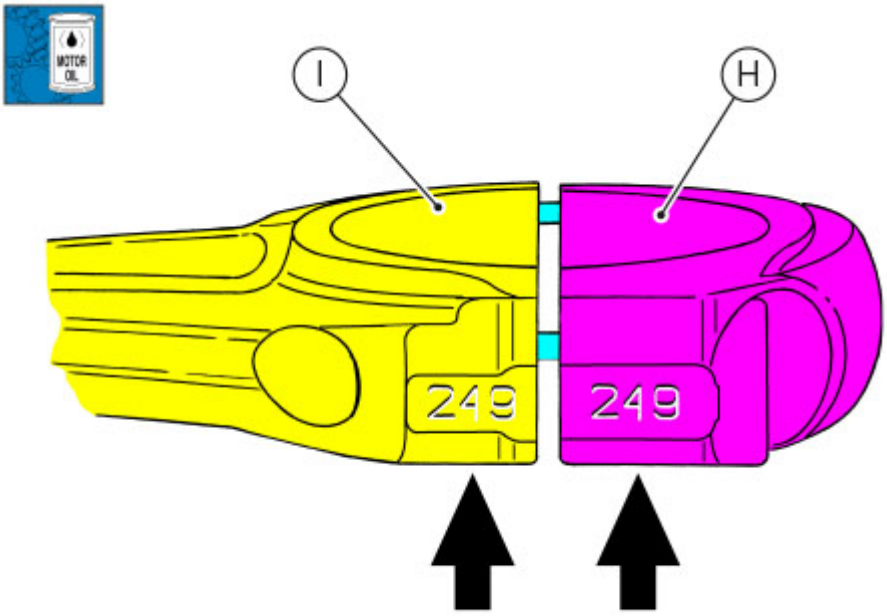

Important

Check that the progressive numbers of a connecting rod are consistent with the selection of the other connecting rod.

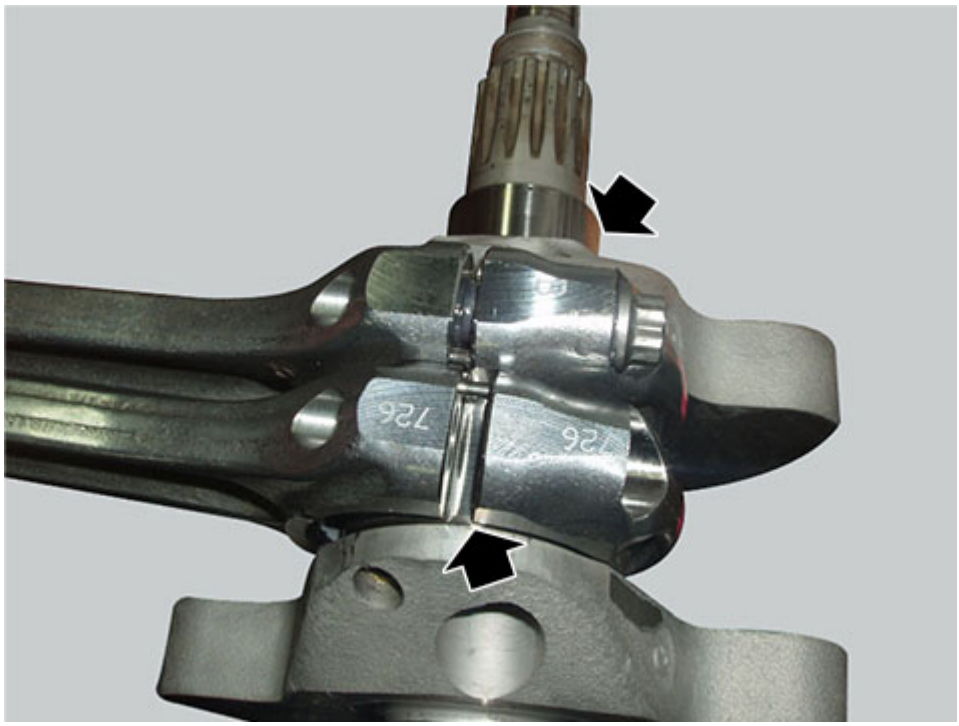

Fill the recommended grease into the two ends of the hole to lubricate threads and underside of the new screws (1) and the thread of the shaft.



Warning
The grease utilised is irritant in contact with the skin; wear protective gloves.

Important
Lubrication of con-rod bolts is essential to obtain the correct coupling and to prevent breakage of the parts.

The con-rod screws may only be used for one tightening.
Tighten the screws (1) fully home by hand.
If this proves difficult or if the screws jam, undo them and lubricate them again.
Remove any excess grease. Tighten the screw by hand until the head seats against the connecting rod.

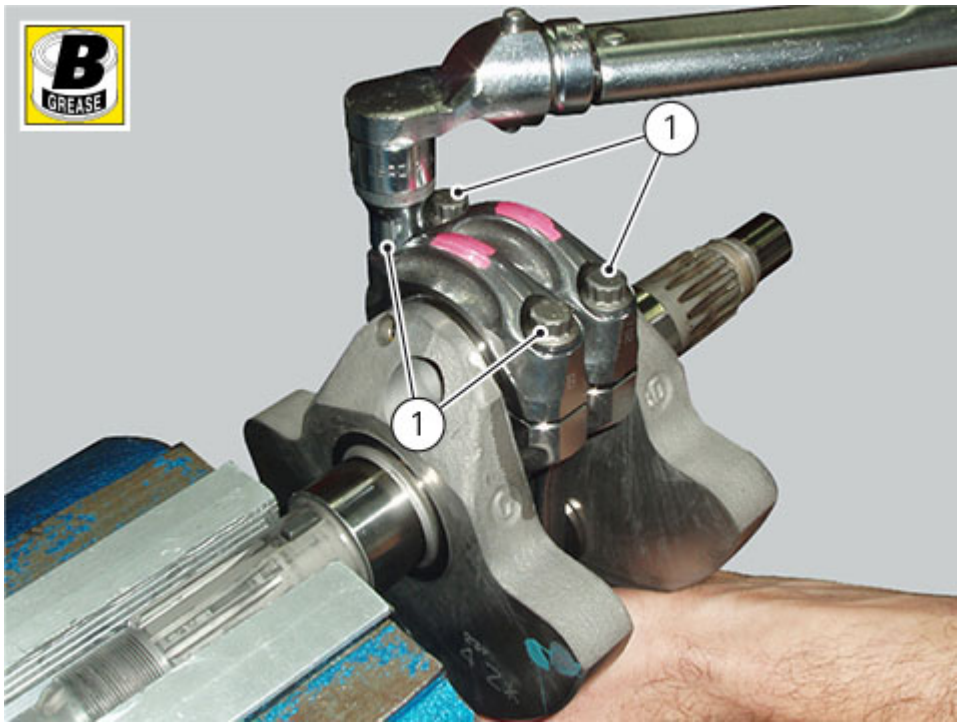

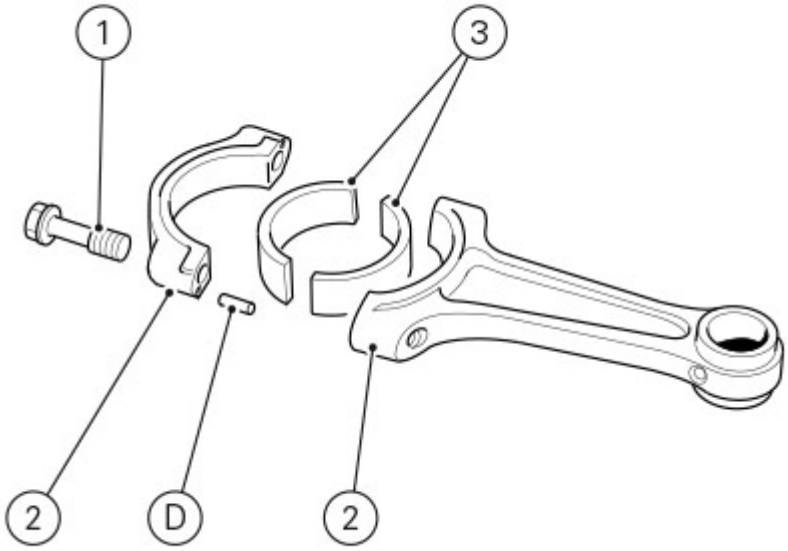

Place between the con-rods spacer (L) of tool no. **88765.1000** or **88765.1005** or **88765.1006** (M) (according to the thickness) and remove the residual end float by fitting the same tools which are available in the following size: 0.1 mm - 0.2 mm - 0.3 mm.
Temporarily fit the gudgeon pin (N) to align the connecting rods and then tighten the screws.

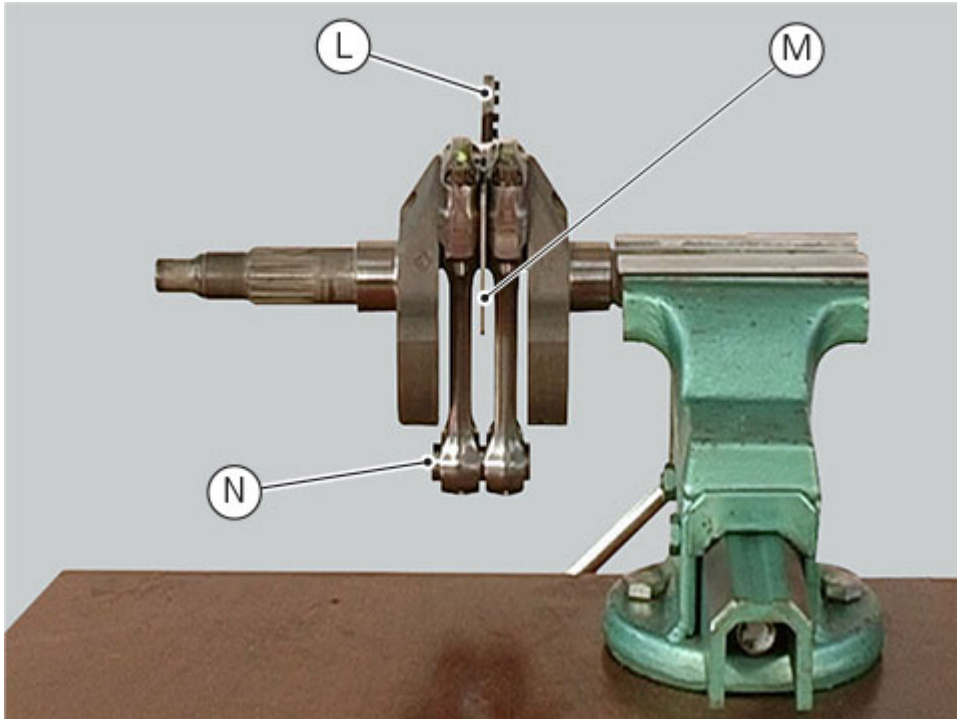

Tighten the screws (1) with a torque wrench and angle reading (degree wheel) in accordance with the procedure described below (observe the same tightening sequence at each step as that of the previous step):

1 first tighten each screw to a torque of 20 Nm;
2 now carry out a second tightening to a torque of 35 Nm on each screw;
3 tighten each screw, reading the angle position, to a torque of 70 Nm, checking that the final angle is between 55° and 75°.

Important

If the final angle is less than 55° or greater than 75°, repeat the procedure using two new screws.



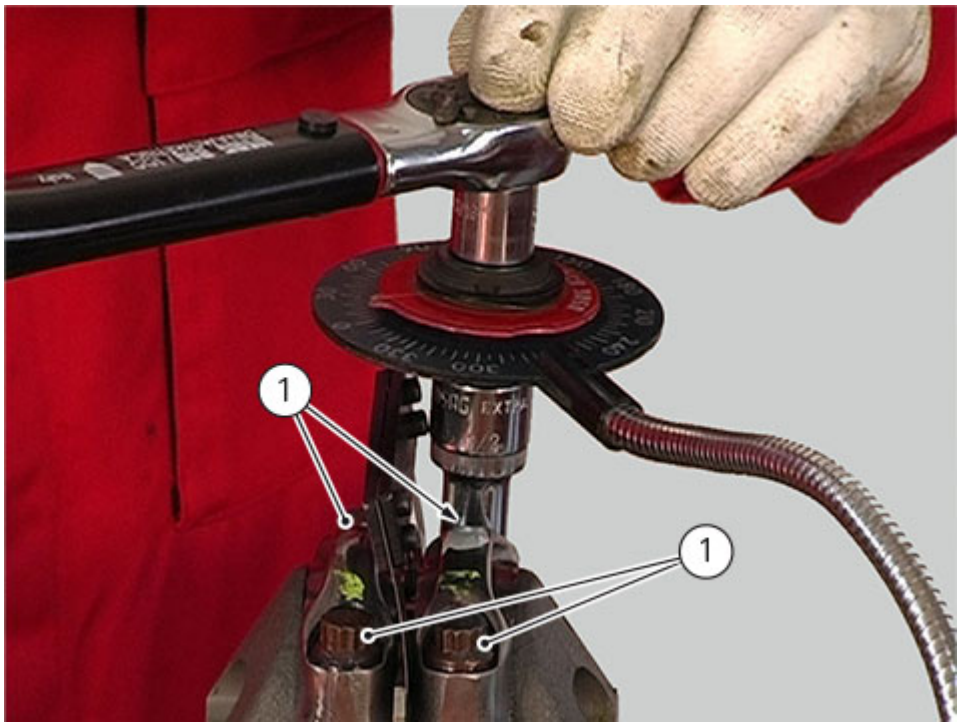
1
1

Disassembling the connecting rod assembly

Loosen the screws (1) and separate the connecting rods from the crankshaft.

Important

Take care not to mix up components of different connecting rods and maintain the original orientation.

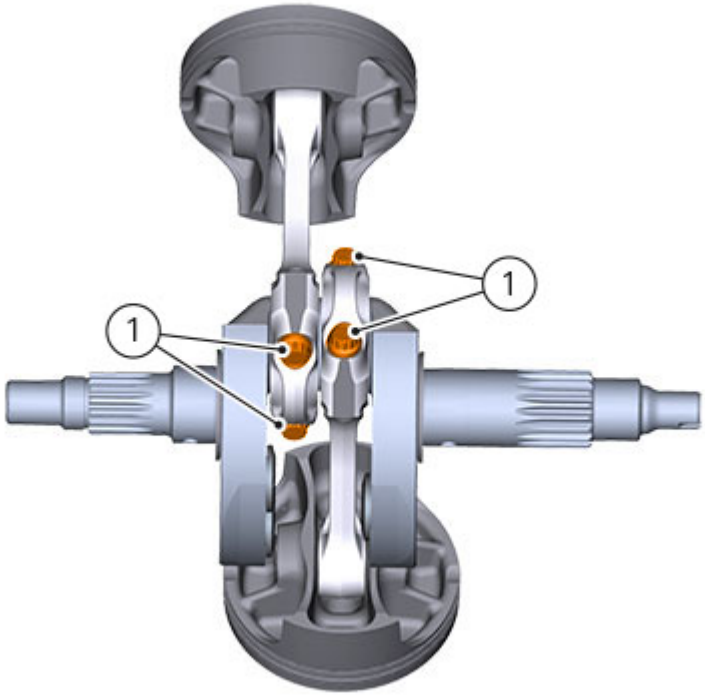

Removing the connecting rod assembly

Remove the engine from the frame (Removing the engine).
Remove the timing components (Removing the timing outer covers).
Remove the camshaft assembly (Removing the camshafts).
Remove the complete cylinder head assembly (Removing the cylinder heads).
Remove the complete cylinder/piston assy (Removing the cylinder/piston assy).
Remove the generator side cover and the generator assembly (Removing the generator cover).
Remove the starter motor (Removing the starter motor).
Remove the clutch cover (Removing the clutch cover).
Remove the clutch cover (Removing the clutch cover).
Remove the clutch unit (Removing the clutch).
Remove the oil pump (Removing the oil pump).
Remove the primary drive gear (Removing the primary drive gear).
Remove the mesh filter (Changing the engine oil and filter cartridge).
Remove the complete gearbox unit (Removing the gearbox unit).
Separate the crankcase (Separating the crankcase halves)

After separating the crankcase halves, remove the crankshaft (1) complete with connecting rods (2).

